AUTHENTICATED
U.S. GOVERNMENT
INFORMATION
GPO

Code of Federal Regulations

40

Parts 61 to 62

Revised as of July 1, 2003

Protection of Environment

Containing a codification of documents of general applicability and future effect

As of July 1, 2003

With Ancillaries

Published by
Office of the Federal Register
National Archives and Records
Administration

A Special Edition of the Federal Register

U.S. GOVERNMENT PRINTING OFFICE
WASHINGTON : 2003

For sale by the Superintendent of Documents, U.S. Government Printing Office
Internet: bookstore.gpo.gov Phone: toll free (866) 512-1800; DC area (202) 512-1800
Fax: (202) 512-2250 Mail: Stop SSOP, Washington, DC 20402–0001

Table of Contents

	Page
Explanation	v
Title 40:	
Chapter I—Environmental Protection Agency (Continued)	3
Finding Aids:	
Material Approved for Incorporation by Reference	495
Table of CFR Titles and Chapters	499
Alphabetical List of Agencies Appearing in the CFR	517
List of CFR Sections Affected	527

Cite this Code: CFR

To cite the regulations in this volume use title, part and section number. Thus, 40 CFR 61.01 *refers to title 40, part 61, section 01.*

Explanation

The Code of Federal Regulations is a codification of the general and permanent rules published in the Federal Register by the Executive departments and agencies of the Federal Government. The Code is divided into 50 titles which represent broad areas subject to Federal regulation. Each title is divided into chapters which usually bear the name of the issuing agency. Each chapter is further subdivided into parts covering specific regulatory areas.

Each volume of the Code is revised at least once each calendar year and issued on a quarterly basis approximately as follows:

Title 1 through Title 16.....as of January 1
Title 17 through Title 27.....as of April 1
Title 28 through Title 41.....as of July 1
Title 42 through Title 50.....as of October 1

The appropriate revision date is printed on the cover of each volume.

LEGAL STATUS

The contents of the Federal Register are required to be judicially noticed (44 U.S.C. 1507). The Code of Federal Regulations is prima facie evidence of the text of the original documents (44 U.S.C. 1510).

HOW TO USE THE CODE OF FEDERAL REGULATIONS

The Code of Federal Regulations is kept up to date by the individual issues of the Federal Register. These two publications must be used together to determine the latest version of any given rule.

To determine whether a Code volume has been amended since its revision date (in this case, July 1, 2003), consult the ''List of CFR Sections Affected (LSA),'' which is issued monthly, and the ''Cumulative List of Parts Affected,'' which appears in the Reader Aids section of the daily Federal Register. These two lists will identify the Federal Register page number of the latest amendment of any given rule.

EFFECTIVE AND EXPIRATION DATES

Each volume of the Code contains amendments published in the Federal Register since the last revision of that volume of the Code. Source citations for the regulations are referred to by volume number and page number of the Federal Register and date of publication. Publication dates and effective dates are usually not the same and care must be exercised by the user in determining the actual effective date. In instances where the effective date is beyond the cutoff date for the Code a note has been inserted to reflect the future effective date. In those instances where a regulation published in the Federal Register states a date certain for expiration, an appropriate note will be inserted following the text.

OMB CONTROL NUMBERS

The Paperwork Reduction Act of 1980 (Pub. L. 96–511) requires Federal agencies to display an OMB control number with their information collection request.

Many agencies have begun publishing numerous OMB control numbers as amendments to existing regulations in the CFR. These OMB numbers are placed as close as possible to the applicable recordkeeping or reporting requirements.

OBSOLETE PROVISIONS

Provisions that become obsolete before the revision date stated on the cover of each volume are not carried. Code users may find the text of provisions in effect on a given date in the past by using the appropriate numerical list of sections affected. For the period before January 1, 2001, consult either the List of CFR Sections Affected, 1949–1963, 1964–1972, 1973–1985, or 1986–2000, published in 11 separate volumes. For the period beginning January 1, 2001, a ''List of CFR Sections Affected'' is published at the end of each CFR volume.

INCORPORATION BY REFERENCE

What is incorporation by reference? Incorporation by reference was established by statute and allows Federal agencies to meet the requirement to publish regulations in the Federal Register by referring to materials already published elsewhere. For an incorporation to be valid, the Director of the Federal Register must approve it. The legal effect of incorporation by reference is that the material is treated as if it were published in full in the Federal Register (5 U.S.C. 552(a)). This material, like any other properly issued regulation, has the force of law.

What is a proper incorporation by reference? The Director of the Federal Register will approve an incorporation by reference only when the requirements of 1 CFR part 51 are met. Some of the elements on which approval is based are:

(a) The incorporation will substantially reduce the volume of material published in the Federal Register.

(b) The matter incorporated is in fact available to the extent necessary to afford fairness and uniformity in the administrative process.

(c) The incorporating document is drafted and submitted for publication in accordance with 1 CFR part 51.

Properly approved incorporations by reference in this volume are listed in the Finding Aids at the end of this volume.

What if the material incorporated by reference cannot be found? If you have any problem locating or obtaining a copy of material listed in the Finding Aids of this volume as an approved incorporation by reference, please contact the agency that issued the regulation containing that incorporation. If, after contacting the agency, you find the material is not available, please notify the Director of the Federal Register, National Archives and Records Administration, Washington DC 20408, or call (202) 741–6010.

CFR INDEXES AND TABULAR GUIDES

A subject index to the Code of Federal Regulations is contained in a separate volume, revised annually as of January 1, entitled CFR INDEX AND FINDING AIDS. This volume contains the Parallel Table of Statutory Authorities and Agency Rules (Table I). A list of CFR titles, chapters, and parts and an alphabetical list of agencies publishing in the CFR are also included in this volume.

An index to the text of ''Title 3—The President'' is carried within that volume.

The Federal Register Index is issued monthly in cumulative form. This index is based on a consolidation of the ''Contents'' entries in the daily Federal Register.

A List of CFR Sections Affected (LSA) is published monthly, keyed to the revision dates of the 50 CFR titles.

REPUBLICATION OF MATERIAL

There are no restrictions on the republication of material appearing in the Code of Federal Regulations.

INQUIRIES

For a legal interpretation or explanation of any regulation in this volume, contact the issuing agency. The issuing agency's name appears at the top of odd–numbered pages.

For inquiries concerning CFR reference assistance, call 202–741–6000 or write to the Director, Office of the Federal Register, National Archives and Records Administration, Washington, DC 20408 or e-mail info@fedreg.nara.gov.

SALES

The Government Printing Office (GPO) processes all sales and distribution of the CFR. For payment by credit card, call toll free, 866–512–1800 or DC area, 202–512–1800, M–F, 8 a.m. to 4 p.m. e.s.t. or fax your order to 202–512–2250, 24 hours a day. For payment by check, write to the Superintendent of Documents, Attn: New Orders, P.O. Box 371954, Pittsburgh, PA 15250–7954. For GPO Customer Service call 202–512–1803.

ELECTRONIC SERVICES

The full text of the Code of Federal Regulations, The United States Government Manual, the Federal Register, Public Laws, Public Papers, Weekly Compilation of Presidential Documents and the Privacy Act Compilation are available in electronic format at www.access.gpo.gov/nara (''GPO Access''). For more information, contact Electronic Information Dissemination Services, U.S. Government Printing Office. Phone 202–512–1530, or 888–293–6498 (toll–free). E–mail, gpoaccess@gpo.gov.

The Office of the Federal Register also offers a free service on the National Archives and Records Administration's (NARA) World Wide Web site for public law numbers, Federal Register finding aids, and related information. Connect to NARA's web site at www.archives.gov/federal__register. The NARA site also contains links to GPO Access.

RAYMOND A. MOSLEY,
Director,
Office of the Federal Register.

July 1, 2003.

THIS TITLE

Title 40—PROTECTION OF ENVIRONMENT is composed of twenty–nine volumes. The parts in these volumes are arranged in the following order: parts 1–49, parts 50–51, part 52 (52.01–52.1018), part 52 (52.1019–End), parts 53–59, part 60 (60.1–End), part 60 (Appendices), parts 61–62, part 63 (63.1–63.599), part 63 (63.600–1–63.1199), part 63 (63.1200–63.1439), part 63 (63.1440–End) parts 64–71, parts 72–80, parts 81–85, part 86 (86.1–86.599–99) part 86 (86.600–1–End), parts 87–99, parts 100–135, parts 136–149, parts 150–189, parts 190–259, parts 260–265, parts 266–299, parts 300–399, parts 400–424, parts 425–699, parts 700–789, and part 790 to End. The contents of these volumes represent all current regulations codified under this title of the CFR as of July 1, 2003.

Chapter I—Environmental Protection Agency appears in all twenty–nine volumes. An alphabetical Listing of Pesticide Chemicals Index appears in parts 150–189. Regulations issued by the Council on Environmental Quality appear in the volume containing part 790 to End. The OMB control numbers for title 40 appear in §9.1 of this chapter.

Would you like to know. . .

if any changes have been made to the *Code of Federal Regulations* or what documents have been published in the *Federal Register* without reading the *Federal Register* every day? If so, you may wish to subscribe to the *LSA* (List of CFR Sections Affected), the *Federal Register Index,* or both.

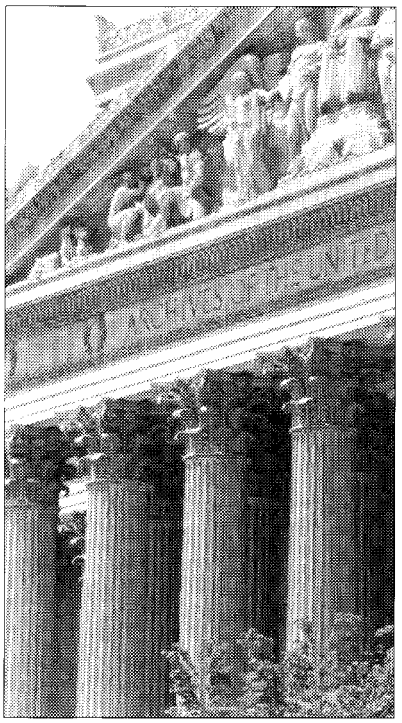

LSA

The *LSA* (List of CFR Sections Affected) is designed to lead users of the *Code of Federal Regulations* to amendatory actions published in the *Federal Register*. The *LSA* is issued monthly in cumulative form. Entries indicate the nature of the changes—such as revised, removed, or corrected.
$31 per year.

Federal Register Index

The index, covering the contents of the daily *Federal Register,* is issued monthly in cumulative form. Entries are carried primarily under the names of the issuing agencies. Significant subjects are carried as cross-references.
$28 per year.

A finding aid is included in each publication which lists *Federal Register* page numbers with the date of publication in the *Federal Register.*

Superintendent of Documents Subscription Order Form

Order Processing Code:
***5421**

❑ **YES,** send me the following indicated subscriptions for one year:

____ **LSA (List of CFR Sections Affected),** (LCS) for $31 per year.

____ **Federal Register Index** (FRSU) $28 per year.

The total cost of my order is $ _____. Price is subject to change. International customers please add 25%.

(Includes regular shipping and handling.)

For privacy check box below:

❑ Do not make my name available to other mailers

Check method of payment:

❑ Check payable to Superintendent of Documents

❑ GPO Deposit Account ☐☐☐☐☐☐☐ — ☐

❑ VISA ❑ MasterCard ☐☐☐☐ (expiration date)

Company or personal name

Street address

City, State, ZIP code

Daytime phone with area code

Purchase order No. (optional)

Credit card No. (must be 20 digits)

Thank you for your order!

Authorizing signature 7/00

Fax your orders (202) 512–2250
Phone your orders (202) 512–1800

Mail To: Superintendent of Documents
P.O. Box 371954
Pittsburgh, PA 15250–7954

Title 40—Protection of Environment

(This book contains parts 61–62)

Part

CHAPTER I—Environmental Protection Agency (Continued) 61

CHAPTER I—ENVIRONMENTAL PROTECTION AGENCY (CONTINUED)

EDITORIAL NOTES: Nomenclature changes to chapter I appear at 65 FR 47324, 37325, Aug. 2, 2000; 66 FR 34375, 34376, June 28, 2001.

SUBCHAPTER C—AIR PROGRAMS (CONTINUED)

Part		*Page*
61	National emission standards for hazardous air pollutants	5
62	Approval and promulgation of State plans for designated facilities and pollutants	327

SUBCHAPTER C—AIR PROGRAMS (CONTINUED)

PART 61—NATIONAL EMISSION STANDARDS FOR HAZARDOUS AIR POLLUTANTS

Subpart A—General Provisions

Sec.
61.01 Lists of pollutants and applicability of part 61.
61.02 Definitions.
61.03 Units and abbreviations.
61.04 Address.
61.05 Prohibited activities.
61.06 Determination of construction or modification.
61.07 Application for approval of construction or modification.
61.08 Approval of construction or modification.
61.09 Notification of startup.
61.10 Source reporting and waiver request.
61.11 Waiver of compliance.
61.12 Compliance with standards and maintenance requirements.
61.13 Emission tests and waiver of emission tests.
61.14 Monitoring requirements.
61.15 Modification.
61.16 Availability of information.
61.17 State authority.
61.18 Incorporations by reference.
61.19 Circumvention.

Subpart B—National Emission Standards for Radon Emissions From Underground Uranium Mines

61.20 Designation of facilities.
61.21 Definitions
61.22 Standard.
61.23 Determining compliance.
61.24 Annual reporting requirements.
61.25 Recordkeeping requirements.
61.26 Exemption from the reporting and testing requirements of 40 CFR 61.10

Subpart C—National Emission Standard for Beryllium

61.30 Applicability.
61.31 Definitions.
61.32 Emission standard.
61.33 Stack sampling.
61.34 Air sampling.

Subpart D—National Emission Standard for Beryllium Rocket Motor Firing

61.40 Applicability.
61.41 Definitions.
61.42 Emission standard.
61.43 Emission testing—rocket firing or propellant disposal.
61.44 Stack sampling.

Subpart E—National Emission Standard for Mercury

61.50 Applicability.
61.51 Definitions.
61.52 Emission standard.
61.53 Stack sampling.
61.54 Sludge sampling.
61.55 Monitoring of emissions and operations.
61.56 Delegation of authority.

Subpart F—National Emission Standard for Vinyl Chloride

61.60 Applicability.
61.61 Definitions.
61.62 Emission standard for ethylene dichloride plants.
61.63 Emission standard for vinyl chloride plants.
61.64 Emission standard for polyvinyl chloride plants.
61.65 Emission standard for ethylene dichloride, vinyl chloride and polyvinyl chloride plants.
61.66 Equivalent equipment and procedures.
61.67 Emission tests.
61.68 Emission monitoring.
61.69 Initial report.
61.70 Reporting.
61.71 Recordkeeping.

Subpart G [Reserved]

Subpart H—National Emission Standards for Emissions of Radionuclides Other Than Radon From Department of Energy Facilities

61.90 Designation of facilities.
61.91 Definitions.
61.92 Standard.
61.93 Emissions monitoring and test procedures.
61.94 Compliance and reporting.
61.95 Recordkeeping requirements.
61.96 Applications to construct or modify.
61.97 Exemption from the reporting and testing requirements of 40 CFR 61.10.

Subpart I—National Emission Standards for Radionuclide Emissions From Federal Facilities Other Than Nuclear Regulatory Commission Licensees and Not Covered by Subpart H

61.100 Applicability.
61.101 Definitions.
61.102 Standard.
61.103 Determining compliance.

61.104 Reporting requirements.
61.105 Recordkeeping requirements.
61.106 Applications to construct or modify.
61.107 Emission determination.
61.108 Exemption from the reporting and testing requirements of 40 CFR 61.10.

Subpart J—National Emission Standard for Equipment Leaks (Fugitive Emission Sources) of Benzene

61.110 Applicability and designation of sources.
61.111 Definitions.
61.112 Standards.

Subpart K—National Emission Standards for Radionuclide Emissions From Elemental Phosphorus Plants

61.120 Applicability.
61.121 Definitions.
61.122 Emission standard.
61.123 Emission testing.
61.124 Recordkeeping requirements.
61.125 Test methods and procedures.
61.126 Monitoring of operations.
61.127 Exemption from the reporting and testing requirements of 40 CFR 61.10.

Subpart L—National Emission Standard for Benzene Emissions from Coke By-Product Recovery Plants

61.130 Applicability, designation of sources, and delegation of authority.
61.131 Definitions.
61.132 Standard: Process vessels, storage tanks, and tar-intercepting sumps.
61.133 Standard: Light-oil sumps.
61.134 Standard: Naphthalene processing, final coolers, and final-cooler cooling towers.
61.135 Standard: Equipment leaks.
61.136 Compliance provisions and alternative means of emission limitation.
61.137 Test methods and procedures.
61.138 Recordkeeping and reporting requirements.
61.139 Provisions for alternative means for process vessels, storage tanks, and tar-intercepting sumps.

Subpart M—National Emission Standard for Asbestos

61.140 Applicability.
61.141 Definitions.
61.142 Standard for asbestos mills.
61.143 Standard for roadways.
61.144 Standard for manufacturing.
61.145 Standard for demolition and renovation.
61.146 Standard for spraying.
61.147 Standard for fabricating.
61.148 Standard for insulating materials.
61.149 Standard for waste disposal for asbestos mills.
61.150 Standard for waste disposal for manufacturing, fabricating, demolition, renovation, and spraying operations.
61.151 Standard for inactive waste disposal sites for asbestos mills and manufacturing and fabricating operations.
61.152 Air-cleaning.
61.153 Reporting.
61.154 Standard for active waste disposal sites.
61.155 Standard for operations that convert asbestos-containing waste material into nonasbestos (asbestos-free) material.
61.156 Cross-reference to other asbestos regulations.
61.157 Delegation of authority.
APPENDIX A TO SUBPART M—INTERPRETIVE RULE GOVERNING ROOF REMOVAL OPERATIONS

Subpart N—National Emission Standard for Inorganic Arsenic Emissions From Glass Manufacturing Plants

61.160 Applicability and designation of source.
61.161 Definitions.
61.162 Emission limits.
61.163 Emission monitoring.
61.164 Test methods and procedures.
61.165 Reporting and recordkeeping requirements.

Subpart O—National Emission Standard for Inorganic Arsenic Emissions From Primary Copper Smelters

61.170 Applicability and designation of source.
61.171 Definitions.
61.172 Standard for new and existing sources.
61.173 Compliance provisions.
61.174 Test methods and procedures.
61.175 Monitoring requirements.
61.176 Recordkeeping requirements.
61.177 Reporting requirements.

Subpart P—National Emission Standard for Inorganic Arsenic Emissions From Arsenic Trioxide and Metallic Arsenic Production Facilities

61.180 Applicability and designation of sources.
61.181 Definitions.
61.182 Standard for new and existing sources.
61.183 Emission monitoring.
61.184 Ambient air monitoring for inorganic arsenic.
61.185 Recordkeeping requirements.

61.186 Reporting requirements.

Subpart Q—National Emission Standards for Radon Emissions From Department of Energy Facilities

61.190 Designation of facilities.
61.191 Definitions.
61.192 Standard.
61.193 Exemption from the reporting and testing requirements of 40 CFR 61.10.

Subpart R—National Emission Standards for Radon Emissions From Phosphogypsum Stacks

61.200 Designation of facilities.
61.201 Definitions.
61.202 Standard.
61.203 Radon monitoring and compliance procedures.
61.204 Distribution and use of phosphogypsum for outdoor agricultural purposes.
61.205 Distribution and use of phosphogypsum for indoor research and development.
61.206 Distribution and use of phosphogypsum for other purposes.
61.207 Radium-226 sampling and measurement procedures.
61.208 Certification requirements.
61.209 Required records.
61.210 Exemption from the reporting and testing requirements of 40 CFR 61.10.

Subpart S [Reserved]

Subpart T—National Emission Standards for Radon Emissions From the Disposal of Uranium Mill Tailings

61.220 Designation of facilities.
61.221 Definitions.
61.222 Standard.
61.223 Compliance procedures.
61.224 Recordkeeping requirements.
61.225 Exemption from the reporting and testing requirements of 40 CFR 61.10.
61.226 Reconsideration of rescission and reinstatement of this subpart.

Subpart U [Reserved]

Subpart V—National Emission Standard for Equipment Leaks (Fugitive Emission Sources)

61.240 Applicability and designation of sources.
61.241 Definitions.
61.242–1 Standards: General.
61.242–2 Standards: Pumps.
61.242–3 Standards: Compressors.
61.242–4 Standards: Pressure relief devices in gas/vapor service.
61.242–5 Standards: Sampling connection systems.
61.242–6 Standards: Open-ended valves or lines.
61.242–7 Standards: Valves.
61.242–8 Standards: Pressure relief services in liquid service and connectors.
61.242–9 Standards: Surge control vessels and bottoms receivers.
61.242–10 Standards: Delay of repair.
61.242–11 Standards: Closed-vent systems and control devices.
61.243–1 Alternative standards for valves in VHAP Service—allowable percentage of valves leaking.
61.243–2 Alternative standards for valves in VHAP service—skip period leak detection and repair.
61.244 Alternative means of emission limitation.
61.245 Test methods and procedures.
61.246 Recordkeeping requirements.
61.247 Reporting requirements.
TABLE 1 TO PART 61, SUBPART V—SURGE CONTROL VESSELS AND BOTTOMS RECEIVERS AT EXISTING SOURCES
TABLE 2 TO PART 61, SUBPART V—SURGE CONTROL VESSELS AND BOTTOMS RECEIVERS AT NEW SOURCES

Subpart W—National Emission Standards for Radon Emissions From Operating Mill Tailings

61.250 Designation of facilities.
61.251 Definitions.
61.252 Standard.
61.253 Determining compliance.
61.254 Annual reporting requirements.
61.255 Recordkeeping requirements.
61.256 Exemption from the reporting and testing requirements of 40 CFR 61.10.

Subpart X [Reserved]

Subpart Y—National Emission Standard for Benzene Emissions From Benzene Storage Vessels

61.270 Applicability and designation of sources.
61.271 Emission standard.
61.272 Compliance provisions.
61.273 Alternative means of emission limitation.
61.274 Initial report.
61.275 Periodic report.
61.276 Recordkeeping.
61.277 Delegation of authority.

Subparts Z–AA [Reserved]

Subpart BB—National Emission Standard for Benzene Emissions From Benzene Transfer Operations

61.300 Applicability.

61.301 Definitions.
61.302 Standards.
61.303 Monitoring requirements.
61.304 Test methods and procedures.
61.305 Reporting and recordkeeping.
61.306 Delegation of authority.

Subparts CC–EE [Reserved]

Subpart FF—National Emission Standard for Benzene Waste Operations

61.340 Applicability.
61.341 Definitions.
61.342 Standards: General.
61.343 Standards: Tanks.
61.344 Standards: Surface impoundments.
61.345 Standards: Containers.
61.346 Standards: Individual drain systems.
61.347 Standards: Oil-water separators.
61.348 Standards: Treatment processes.
61.349 Standards: Closed-vent systems and control devices.
61.350 Standards: Delay of repair.
61.351 Alternative standards for tanks.
61.352 Alternative standards for oil-water separators.
61.353 Alternative means of emission limitation.
61.354 Monitoring of operations.
61.355 Test methods, procedures, and compliance provisions.
61.356 Recordkeeping requirements.
61.357 Reporting requirements.
61.358 Delegation of authority.
61.359 [Reserved]

APPENDIX A TO PART 61—NATIONAL EMISSION STANDARDS FOR HAZARDOUS AIR POLLUTANTS, COMPLIANCE STATUS INFORMATION
APPENDIX B TO PART 61—TEST METHODS
APPENDIX C TO PART 61—QUALITY ASSURANCE PROCEDURES
APPENDIX D TO PART 61—METHODS FOR ESTIMATING RADIONUCLIDE EMISSIONS
APPENDIX E TO PART 61—COMPLIANCE PROCEDURES METHODS FOR DETERMINING COMPLIANCE WITH SUBPART I

AUTHORITY: 42 U.S.C. 7401 *et seq.*

SOURCE: 38 FR 8826, Apr. 6, 1973, unless otherwise noted.

Subpart A—General Provisions

§ 61.01 Lists of pollutants and applicability of part 61.

(a) The following list presents the substances that, pursuant to section 112 of the Act, have been designated as hazardous air pollutants. The FEDERAL REGISTER citations and dates refer to the publication in which the listing decision was originally published.

Asbestos (36 FR 5931; Mar. 31, 1971)
Benzene (42 FR 29332; June 8, 1977)
Beryllium (36 FR 5931; Mar. 31, 1971)
Coke Oven Emissions (49 FR 36560; Sept. 18, 1984)
Inorganic Arsenic (45 FR 37886; June 5, 1980)
Mercury (36 FR 5931; Mar. 31, 1971)
Radionuclides (44 FR 76738; Dec. 27, 1979)
Vinyl Chloride (40 FR 59532; Dec. 24, 1975)

(b) The following list presents other substances for which a FEDERAL REGISTER notice has been published that included consideration of the serious health effects, including cancer, from ambient air exposure to the substance.

Acrylonitrile (50 FR 24319; June 10, 1985)
1,3-Butadiene (50 FR 41466; Oct. 10, 1985)
Cadmium (50 FR 42000; Oct. 16, 1985)
Carbon Tetrachloride (50 FR 32621; Aug. 13, 1985)
Chlorinated Benzenes (50 FR 32628; Aug. 13, 1985)
Chlorofluorocarbon—113 (50 FR 24313; June 10, 1985)
Chloroform (50 FR 39626; Sept. 27, 1985)
Chloroprene (50 FR 39632; Sept. 27, 1985)
Chromium (50 FR 24317; June 10, 1985)
Copper (52 FR 5496; Feb. 23, 1987)
Epichlorohydrin (50 FR 24575; June 11, 1985)
Ethylene Dichloride (50 FR 41994; Oct. 16, 1985)
Ethylene Oxide (50 FR 40286; Oct. 2, 1985)
Hexachlorocyclopentadiene (50 FR 40154; Oct. 1, 1985)
Manganese (50 FR 32627; Aug. 13, 1985)
Methyl Chloroform (50 FR 24314; June 10, 1985)
Methylene Chloride (50 FR 42037; Oct. 17, 1985)
Nickel (51 FR 34135; Sept. 25, 1986)
Perchloroethylene (50 FR 52800; Dec. 26, 1985)
Phenol (51 FR 22854; June 23, 1986)
Polycyclic Organic Matter (49 FR 31680; Aug. 8, 1984)
Toluene (49 FR 22195; May 25, 1984)
Trichloroethylene (50 FR 52422; Dec. 23, 1985)
Vinylidene Chloride (50 FR 32632; Aug. 13, 1985)
Zinc and Zinc Oxide (52 FR 32597, Aug. 28, 1987)

(c) This part applies to the owner or operator of any stationary source for which a standard is prescribed under this part.

(d) In addition to complying with the provisions of this part, the owner or operator of a stationary source subject to a standard in this part may be required to obtain an operating permit issued to stationary sources by an authorized State air pollution control agency or by the Administrator of the U.S. Environmental Protection Agency (EPA) pursuant to title V of the Clean

Air Act (Act) as amended November 15, 1990 (42 U.S.C. 7661). For more information about obtaining an operating permit see part 70 of this chapter.

[50 FR 46290, Nov. 7, 1985, as amended at 51 FR 7715 and 7719, Mar. 5, 1986; 51 FR 11022, Apr. 1, 1986; 52 FR 37617, Oct. 8, 1987; 59 FR 12429, Mar. 16, 1994]

§61.02 Definitions.

The terms used in this part are defined in the Act or in this section as follows:

Act means the Clean Air Act (42 U.S.C. 7401 *et seq.*).

Administrator means the Administrator of the Environmental Protection Agency or his authorized representative.

Alternative method means any method of sampling and analyzing for an air pollutant which is not a reference method but which has been demonstrated to the Administrator's satisfaction to produce results adequate for the Administrator's determination of compliance.

Approved permit program means a State permit program approved by the Administrator as meeting the requirements of part 70 of this chapter or a Federal permit program established in this chapter pursuant to title V of the Act (42 U.S.C. 7661).

Capital expenditure means an expenditure for a physical or operational change to a stationary source which exceeds the product of the applicable ''annual asset guideline repair allowance percentage'' specified in the latest edition of Internal Revenue Service (IRS) Publication 534 and the stationary source's basis, as defined by section 1012 of the Internal Revenue Code. However, the total expenditure for a physical or operational change to a stationary source must not be reduced by any ''excluded additions'' as defined for stationary sources constructed after December 31, 1981, in IRS Publication 534, as would be done for tax purposes. In addition, ''annual asset guideline repair allowance'' may be used even though it is excluded for tax purposes in IRS Publication 534.

Commenced means, with respect to the definition of ''new source'' in section 111(a)(2) of the Act, that an owner or operator has undertaken a continuous program of construction or modification or that an owner or operator has entered into a contractual obligation to undertake and complete, within a reasonable time, a continuous program of construction or modification.

Compliance schedule means the date or dates by which a source or category of sources is required to comply with the standards of this part and with any steps toward such compliance which are set forth in a waiver of compliance under §61.11.

Construction means fabrication, erection, or installation of an affected facility.

Effective date is the date of promulgation in the FEDERAL REGISTER of an applicable standard or other regulation under this part.

Existing source means any stationary source which is not a new source.

Issuance of a part 70 permit will occur, if the State is the permitting authority, in accordance with the requirements of part 70 of this chapter and the applicable, approved State permit program. When the EPA is the permitting authority, issuance of a title V permit occurs immediately after the EPA takes final action on the final permit.

Monitoring system means any system, required under the monitoring sections in applicable subparts, used to sample and condition (if applicable), to analyze, and to provide a record of emissions or process parameters.

New source means any stationary source, the construction or modification of which is commenced after the publication in the FEDERAL REGISTER of proposed national emission standards for hazardous air pollutants which will be applicable to such source.

Owner or operator means any person who owns, leases, operates, controls, or supervises a stationary source.

Part 70 permit means any permit issued, renewed, or revised pursuant to part 70 of this chapter.

Permit program means a comprehensive State operating permit system established pursuant to title V of the Act (42 U.S.C. 7661) and regulations codified in part 70 of this chapter and applicable State regulations, or a comprehensive Federal operating permit system established pursuant to title V of the Act

and regulations codified in this chapter.

Permitting authority means:

(1) The State air pollution control agency, local agency, other State agency, or other agency authorized by the Administrator to carry out a permit program under part 70 of this chapter; or

(2) The Administrator, in the case of EPA-implemented permit programs under title V of the Act (42 U.S.C. 7661).

Reference method means any method of sampling and analyzing for an air pollutant, as described in appendix B to this part.

Run means the net period of time during which an emission sample is collected. Unless otherwise specified, a run may be either intermittent or continuous within the limits of good engineering practice.

Standard means a national emission standard including a design, equipment, work practice or operational standard for a hazardous air pollutant proposed or promulgated under this part.

Startup means the setting in operation of a stationary source for any purpose.

State means all non-Federal authorities, including local agencies, interstate associations, and State-wide programs, that have delegated authority to implement:

(1) The provisions of this part; and/or

(2) The permit program established under part 70 of this chapter. The term State shall have its conventional meaning where clear from the context.

Stationary source means any building, structure, facility, or installation which emits or may emit any air pollutant which has been designated as hazardous by the Administrator.

Title V permit means any permit issued, renewed, or revised pursuant to Federal or State regulations established to implement title V of the Act (42 U.S.C. 7661). A title V permit issued by a State permitting authority is called a part 70 permit in this part.

[44 FR 55174, Sept. 25, 1979, as amended at 50 FR 46290, Nov. 7, 1985; 59 FR 12429, Mar. 16, 1994]

§ 61.03 Units and abbreviations.

Used in this part are abbreviations and symbols of units of measure. These are defined as follows:

(a) System International (SI) units of measure:

A=ampere
g=gram
Hz=hertz
J=joule
K=degree Kelvin
kg=kilogram
m=meter
m^2=square meter
m^3=cubic meter
mg=milligram=10^{-3}gram
mm=millimeter=10^{-3}meter
Mg=megagram=10^{-6}gram
mol=mole
N=newton
ng=nanogram=10^{-9}gram
nm=nanometer=10^{-9}meter
Pa=pascal
s=second
V=volt
W=watt
Ω=ohm
μg=microgram=10^{-6}gram

(b) Other units of measure:

°C=degree Celsius (centigrade)
cfm=cubic feet per minute
cc=cubic centimeter
Ci=curie
d=day
°F=degree Fahrenheit
ft^2=square feet
ft^3=cubic feet
gal=gallon
in=inch
in Hg=inches of mercury
in H_2O=inches of water
l=liter
lb=pound
lpm=liter per minute
min=minute
ml=milliliter=10^{-3}liter
mrem=millirem=10^{-3} rem
oz=ounces
pCi=picocurie=10^{-12} curie
psig=pounds per square inch gage
°R=degree Rankine
μ=microliter=10^{-6}liter
v/v=volume per volume
yd^2=square yards
yr=year

(c) Chemical nomenclature:

Be=beryllium
Hg=mercury
H_2O=water

(d) Miscellaneous:

act=actual

avg=average
I.D.=inside diameter
M=molar
N=normal
O.D.=outside diameter
%=percent
std=standard

[42 FR 51574, Sept. 29, 1977, as amended at 54 FR 51704, Dec. 15, 1989]

§61.04 Address.

(a) All requests, reports, applications, submittals, and other communications to the Administrator pursuant to this part shall be submitted in duplicate to the appropriate Regional Office of the U.S. Environmental Protection Agency to the attention of the Director of the Division indicated in the following list of EPA Regional Offices.

Region I (Connecticut, Maine, Massachusetts, New Hampshire, Rhode Island, Vermont), Director, Air Management Division, U.S. Environmental Protection Agency, John F. Kennedy Federal Building, Boston, MA 02203.

Region II (New Jersey, New York, Puerto Rico, Virgin Islands), Director, Air and Waste Management Division, U.S. Environmental Protection Agency, Federal Office Building, 26 Federal Plaza (Foley Square), New York, NY 10278.

Region III (Delaware, District of Columbia, Maryland, Pennsylvania, Virginia, West Virginia), Director, Air and Waste Management Division, U.S. Environmental Protection Agency, Curtis Building, Sixth and Walnut Streets, Philadelphia, PA 19106.

Region IV (Alabama, Florida, Georgia, Kentucky, Mississippi, North Carolina, South Carolina, Tennessee), Director, Air and Waste Management Division, U.S. Environmental Protection Agency, 345 Courtland Street, NE., Atlanta, GA 30365.

Region V (Illinois, Indiana, Michigan, Minnesota, Ohio, Wisconsin), Director, Air and Radiation Division, U.S. Environmental Protection Agency, 77 West Jackson Boulevard, Chicago, IL 60604–3590.

Region VI (Arkansas, Louisiana, New Mexico, Oklahoma, Texas); Director; Air, Pesticides, and Toxics Division; U.S. Environmental Protection Agency, 1445 Ross Avenue, Dallas, TX 75202.

Region VII (Iowa, Kansas, Missouri, Nebraska), Director, Air, RCRA, and Toxics Division, U.S. Environmental Protection Agency, 901 N. 5th Street, Kansas City, KS 66101.

Region VIII (Colorado, Montana, North Dakota, South Dakota, Utah, Wyoming) Assistant Regional Administrator, Office of Enforcement, Compliance and Environmental Justice, 999 18th Street, Suite 300, Denver, CO 80202–2466.

Region IX (American Samoa, Arizona, California, Guam, Hawaii, Nevada), Director, Air Division, U.S. Environmental Protection Agency, 75 Hawthorne Street, San Francisco, CA 94105.

Region X (Alaska, Idaho, Oregon, Washington), Director, Office of Air Quality, U.S. Environmental Protection Agency, 1200 Sixth Avenue (OAQ–107), Seattle, WA 98101.

(b) Section 112(d) of the Act directs the Administrator to delegate to each State, when appropriate, the authority to implement and enforce national emission standards for hazardous air pollutants for stationary sources located in such State. If the authority to implement and enforce a standard under this part has been delegated to a State, all information required to be submitted to EPA under paragraph (a) of this section shall also be submitted to the appropriate State agency (provided, that each specific delegation may exempt sources from a certain Federal or State reporting requirement). The Administrator may permit all or some of the information to be submitted to the appropriate State agency only, instead of to EPA and the State agency. If acceptable to both the Administrator and the owner or operator of a source, notifications and reports may be submitted on electronic media. The appropriate mailing address for those States whose delegation request has been approved is as follows:

(A) [Reserved]

(B) State of Alabama, Air Pollution Control Division, Air Pollution Control Commission, 645 S. McDonough Street, Montgomery, AL 36104.

(C) State of Alaska. (i) Alaska Department of Environmental Conservation (ADEC), 410 Willoughby Avenue, Suite 303, Juneau, AK 99801–1795, *http://www.state.ak.us/local/akpages/ENV.CONSERV/home.htm*.

(ii) See paragraph (c)(10) of this section for a table indicating the delegation status of National Emission Standards for Hazardous Air Pollutants for Region 10—Alaska, Idaho, Oregon, and Washington.

(D) Arizona:

Arizona Department of Environmental Quality, Office of Air Quality, P.O. Box 600, Phoenix, AZ 85001–0600.

Maricopa County Air Pollution Control, 2406 S. 24th Street, Suite E–214, Phoenix, AZ 85034.

Pima County Department of Environmental Quality, 130 West Congress Street, 3rd Floor, Tucson, AZ 85701–1317.

Pinal County Air Quality Control District, Building F, 31 North Pinal Street, Florence, AZ 85232.

NOTE: For tables listing the delegation status of agencies in Region IX, see paragraph (c)(9) of this section.

(E) State of Arkansas: Chief, Division of Air Pollution Control, Arkansas Department of Pollution Control and Ecology, 8001 National Drive, P.O. Box 9583, Little Rock, AR 72209.

(F) California:

Amador County Air Pollution Control District, 500 Argonaut Lane, Jackson, CA 95642.

Antelope Valley Air Pollution Control District, 43301 Division Street, Suite 206, P.O. Box 4409, Lancaster, CA 93539–4409.

Bay Area Air Quality Management District, 939 Ellis Street, San Francisco, CA 94109.

Butte County Air Pollution Control District, 2525 Dominic Drive, Suite J, Chico, CA 95928–7184.

Calaveras County Air Pollution Control District, 891 Mountain Ranch Rd., San Andreas, CA 95249.

Colusa County Air Pollution Control District, 100 Sunrise Blvd., Suite F, Colusa, CA 95932–3246.

El Dorado County Air Pollution Control District, 2850 Fairlane Court, Bldg. C, Placerville, CA 95667–4100.

Feather River Air Quality Management District, 938 14th Street, Marysville, CA 95901–4149.

Glenn County Air Pollution Control District, 720 N. Colusa Street, P.O. Box 351, Willows, CA 95988–0351.

Great Basin Unified Air Pollution Control District, 157 Short Street, Suite 6, Bishop, CA 93514–3537.

Imperial County Air Pollution Control District, 150 South Ninth Street, El Centro, CA 92243–2801.

Kern County Air Pollution Control District (Southeast Desert), 2700 M. Street, Suite 302, Bakersfield, CA 93301–2370.

Lake County Air Quality Management District, 885 Lakeport Blvd., Lakeport, CA 95453–5405.

Lassen County Air Pollution Control District, 175 Russell Avenue, Susanville, CA 96130–4215.

Mariposa County Air Pollution Control District, P.O. Box 5, Mariposa, CA 95338.

Mendocino County Air Pollution Control District, 306 E. Gobbi Street, Ukiah, CA 95482–5511.

Modoc County Air Pollution Control District, 202 W. 4th Street, Alturas, CA 96101–3915.

Mojave Desert Air Quality Management District, 14306 Part Avenue, Victorville, CA 92392–2310.

Monterey Bay Unified Air Pollution Control District, 24580 Silver Cloud Ct., Monterey, CA 93940–6536.

North Coast Unified Air Pollution Control District, 2300 Myrtle Avenue, Eureka, CA 95501–3327.

Northern Sierra Air Quality Management District, 200 Litton Drive, P.O. Box 2509, Grass Valley, CA 95945–2509.

Northern Sonoma County Air Pollution Control District, 150 Matheson Street, Healdsburg, CA 95448–4908.

Placer County Air Pollution Control District, DeWitt Center, 11464 ''B'' Avenue, Auburn, CA 95603–2603.

Sacramento Metropolitan Air Quality Management District, 777 12th Street, Third Floor, Sacramento, CA 95814–1908.

San Diego County Air Pollution Control District, 9150 Chesapeake Drive, San Diego, CA 92123–1096.

San Joaquin Valley Unified Air Pollution Control District, 1999 Tuolumne Street, 1990 E. Gettysburg, Fresno, CA 93726.

San Luis Obispo County Air Pollution Control District, 3433 Roberto Court, San Luis Obispo, CA 93401–7126.

Santa Barbara County Air Pollution Control District, 26 Castilian Drive, B–23, Goleta, CA 93117–3027.

Shasta County Air Quality Management District, 1855 Placer Street, Suite 101, Redding, CA 96001–1759.

Siskiyou County Air Pollution Control District, 525 So. Foothill Drive, Yreka, CA 96097–3036.

South Coast Air Quality Management District, 21865 E. Copley Drive, Diamond Bar, CA 91765–4182.

Tehama County Air Pollution Control District, P.O. Box 38 (1750 Walnut Street), Red Bluff, CA 96080–0038.

Tuolumne County Air Pollution Control District, 2 South Green Street, Sonora, CA 95370–4618.

Ventura County Air Pollution Control District, 669 County Square Drive, Ventura, CA 93003–5417.

Yolo-Solano Air Quality Management District, 1947 Galileo Ct., Suite 103, Davis, CA 95616–4882.

NOTE: For tables listing the delegation status of agencies in Region IX, see paragraph (c)(9) of this section.

(G) State of Colorado, Air Pollution Control Division, Department of Public Health and Environment, 4300 Cherry Creek Drive South, Denver, CO 80246–1530.

NOTE: For a table listing Region VIII's NESHAP delegation status, see paragraph (c) of this section.

(H) State of Connecticut, Bureau of Air Management, Department of Environmental

Protection, State Office Building, 165 Capitol Avenue, Hartford, CT 06106.

(I) State of Delaware:

Delaware Department of Natural Resources and Environmental Control, Tatnall Building, P.O. Box 1401, Dover, DE 19901.

(J) [Reserved]

(K) Bureau of Air Quality Management, Department of Environmental Regulation, Twin Towers Office Building, 2600 Blair Stone Road, Tallahassee, FL 32301.

(L) State of Georgia, Environmental Protection Division, Department of Natural Resources, 270 Washington Street, SW., Atlanta, GA 30334.

(M) Hawaii:

Hawaii State Agency, Clean Air Branch, 919 Ala Moana Blvd., 3rd Floor, Post Office Box 3378, Honolulu HI 96814.

NOTE: For tables listing the delegation status of agencies in Region IX, see paragraph (c)(9) of this section.

(N) State of Idaho. (i) Idaho Department of Environmental Conservation (IDEQ), 1410 N. Hilton, Boise, ID 83706, *http://www2.state.id.us/deq/*.

(ii) See paragraph (c)(10) of this section for a table indicating the delegation status of National Emission Standards for Hazardous Air Pollutants for Region 10—Alaska, Idaho, Oregon, and Washington.

(O) State of Illinois, Bureau of Air, Division of Air Pollution Control, Illinois Environmental Protection Agency, 2200 Churchill Road, Springfield, IL 62794–9276.

(P) State of Indiana, Indiana Department of Environmental Management, 100 North Senate Avenue, P.O. Box 6015, Indianapolis, Indiana 46206–6015.

(Q) State of Iowa: Iowa Department of Natural Resources, Environmental Protection Division, Air Quality Bureau, 7900 Hickman Road, Suite 1, Urbandale, IA 50322.

(R) State of Kansas: Kansas Department of Health and Environment, Bureau of Air and Radiation, 1000 S.W. Jackson, Suite 310, Topeka, KS 66612–1366.

(S) Division of Air Pollution Control, Department for Natural Resources and Environmental Protection, U.S. 127, Frankfort, KY 40601.

(T) State of Louisiana: Program Administrator, Air Quality Division, Louisiana Department of Environmental Quality, P.O. Box 44096, Baton Rouge, LA 70804.

(U) State of Maine, Bureau of Air Quality Control, Department of Environmental Protection, State House, Station No. 17, Augusta, ME 04333.

(V) State of Maryland, Bureau of Air Quality and Noise Control, Maryland State Department of Health and Mental Hygiene, 201 West Preston Street, Baltimore, MD 21201.

(W) Commonwealth of Massachusetts, Division of Air Quality Control, Department of Environmental Protection, One Winter Street, 7th floor, Boston, MA 02108.

(X) State of Michigan, Air Quality Division, Michigan Department of Environmental Quality, P.O. Box 30260, Lansing, Michigan 48909.

(Y) Minnesota Pollution Control Agency, Division of Air Quality, 520 Lafayette Road, St. Paul, MN 55155.

(Z) Bureau of Pollution Control, Department of Natural Resources, P.O. Box 10385, Jackson, MS 39209.

(AA) State of Missouri: Missouri Department of Natural Resources, Division of Environmental Quality, P.O. Box 176, Jefferson City, MO 65102.

(BB) State of Montana, Department of Environmental Quality, 1520 E. 6th Ave., PO Box 200901, Helena, MT 59620–0901.

NOTE: For a table listing Region VIII's NESHAP delegation status, see paragraph (c) of this section.

(CC) State of Nebraska, Nebraska Department of Environmental Control, P.O. Box 94877, State House Station, Lincoln, NE 68509.

Lincoln-Lancaster County Health Department, Division of Environmental Health, 2200 St. Marys Avenue, Lincoln, NE 68502.

(DD) Nevada:

Nevada State Agency, Air Pollution Control, Bureau of Air Quality/Division of Environmental Protection, 333 West Nye Lane, Carson City, NV 89710.

Clark County Department of Air Quality Management, 500 S. Grand Central Parkway, First floor, Las Vegas, NV 89155–1776.

Washoe County Air Pollution Control, Washoe County District Air Quality Management, P.O. Box 11130, 1001 E. Ninth Street, Reno, NV 89520.

NOTE: For tables listing the delegation status of agencies in Region IX, see paragraph (c)(9) of this section.

(EE) State of New Hampshire, Air Resources Division, Department of Environmental Services, 64 North Main Street, Caller Box 2033, Concord, NH 03302–2033.

(FF) State of New Jersey: New Jersey Department of Environmental Protection, John Fitch Plaza, P.O. Box 2807, Trenton, NJ 08625.

(GG) State of New Mexico: Director, New Mexico Environmental Improvement Division, Health and Environment Department, 1190 St. Francis Drive, Santa Fe, NM 87503.

(i) The City of Albuquerque and Bernalillo County: Director, The Albuquerque Environmental Health Department, The City

of Albuquerque, P.O. Box 1293, Albuquerque, NM 87103.

(HH) New York: New York State Department of Environmental Conservation, 50 Wolf Road, Albany, NY 12233, attention: Division of Air Resources.

(II) North Carolina Environmental Management Commission, Department of Natural and Economic Resources, Division of Environmental Management, P.O. Box 27687, Raleigh, NC 27611. Attention: Air Quality Section.

(JJ) State of North Dakota, Division of Air Quality, North Dakota Department of Health, P.O. Box 5520, Bismarck, ND 58506–5520.

NOTE: For a table listing Region VIII's NESHAP delegation status, see paragraph (c) of this section.

(KK) State of Ohio—

(i) Medina, Summit and Portage Counties: Director, Akron Regional Air Quality Management District, 177 South Broadway, Akron, OH 44308.

(ii) Stark County: Air Pollution Control Division, 420 Market Avenue North, Canton, Ohio 44702–3335.

(iii) Butler, Clermont, Hamilton, and Warren Counties: Air Program Manager, Hamilton County Department of Environmental Services, 1632 Central Parkway, Cincinnati, Ohio 45210.

(iv) Cuyahoga County: Commissioner, Department of Public Health & Welfare, Division of Air Pollution Control, 1925 Saint Clair, Cleveland, Ohio 44114.

(v) Belmont, Carroll, Columbiana, Harrison, Jefferson, and Monroe Counties: Director, North Ohio Valley Air Authority (NOVAA), 814 Adams Street, Steubenville, OH 43952.

(vi) Clark, Darke, Greene, Miami, Montgomery, and Preble Counties: Director, Regional Air Pollution Control Agency (RAPCA), 451 West Third Street, Dayton, Ohio 45402.

(vii) Lucas County and the City of Rossford (in Wood County): Director, Toledo Environmental Services Agency, 26 Main Street, Toledo, OH 43605.

(viii) Adams, Brown, Lawrence, and Scioto Counties: Engineer-Director, Air Division, Portsmouth City Health Department, 740 Second Street, Portsmouth, OH 45662.

(ix) Allen, Ashland, Auglaize, Crawford, Defiance, Erie, Fulton, Hancock, Hardin, Henry, Huron, Marion, Mercer, Ottawa, Paulding, Putnam, Richland, Sandusky, Seneca, Van Wert, Williams, Wood (except City of Rossford), and Wyandot Counties: Ohio Environmental Protection Agency, Northwest District Office, Air Pollution Control, 347 Dunbridge Rd., Bowling Green, Ohio 43402.

(x) Ashtabula, Holmes, Lorain, and Wayne Counties: Ohio Environmental Protection Agency, Northeast District Office, Air Pollution Unit, 2110 East Aurora Road, Twinsburg, OH 44087.

(xi) Athens, Coshocton, Gallia, Guernsey, Hocking, Jackson, Meigs, Morgan, Muskingum, Noble, Perry, Pike, Ross, Tuscarawas, Vinton, and Washington Counties: Ohio Environmental Protection Agency, Southeast District Office, Air Pollution Unit, 2195 Front Street, Logan, OH 43138.

(xii) Champaign, Clinton, Highland, Logan, and Shelby Counties: Ohio Environmental Protection Agency, Southwest District Office, Air Pollution Unit, 401 East Fifth Street, Dayton, Ohio 45402–2911.

(xiii) Delaware, Fairfield, Fayette, Franklin, Knox, Licking, Madison, Morrow, Pickaway, and Union Counties: Ohio Environmental Protection Agency, Central District Office, Air Pollution Control, 3232 Alum Creek Drive, Columbus, Ohio, 43207–3417.

(xiv) Geauga and Lake Counties: Lake County General Health District, Air Pollution Control, 105 Main Street, Painesville, OH 44077.

(xv) Mahoning and Trumbull Counties: Mahoning-Trumbull Air Pollution Control Agency, 9 West Front Street, Youngstown, OH 44503.

(LL) State of Oklahoma, Oklahoma State Department of Health, Air Quality Service, P.O. Box 53551, Oklahoma City, OK 73152.

(i) Oklahoma City and County: Director, Oklahoma City-County Health Department, 921 Northeast 23rd Street, Oklahoma City, OK 73105.

(ii) Tulsa County: Tulsa City-County Health Department, 4616 East Fifteenth Street, Tulsa, OK 74112.

(MM) State of Oregon. (i) Oregon Department of Environmental Quality (ODEQ), 811 SW Sixth Ave, Portland, OR 97204–1390, *http://www.deq.state.or.us/*.

(ii) Lane Regional Air Pollution Authority (LRAPA), 1010 Main Street, Springfield, Oregon 97477, *http://www.lrapa.org*.

(iii) See paragraph (c)(10) of this section for a table indicating the delegation status of National Emission Standards for Hazardous Air Pollutants for Region 10—Alaska, Idaho, Oregon, and Washington.

(iv)–(vii) [Reserved]

(viii) Lane Regional Air Pollution Authority, 225 North Fifth, suite 501, Springfield, OR 97477.

(NN) Pennsylvania.

(i) City of Philadelphia: Philadelphia Department of Public Health, Air Management Services, 500 S. Broad Street, Philadelphia, PA 19146.

(ii) Commonwealth of Pennsylvania: Department of Environmental Resources, Post Office Box 2063, Harrisburg, PA 17120.

(iii) Allegheny County: Allegheny County Health Department, Bureau of Air Pollution Control, 301 Thirty-ninth Street, Pittsburgh, PA 15201.

(OO) State of Rhode Island, Division of Air and Hazardous Materials, Department of Environmental Management, 291 Promenade Street, Providence, RI 02908.

(PP) State of South Carolina, Office of Environmental Quality Control, Department of Health and Environmental Control, 2600 Bull Street, Columbia, SC 29201.

(QQ) State of South Dakota, Department of Water and Natural Resources, Office of Air Quality and Solid Waste, Joe Foss Building, 523 East Capitol, Pierre, SD 57501–3181.

NOTE: For a table listing Region VIII's NESHAPs delegation status, see paragraph (c) of this section.

(RR) Division of Air Pollution Control, Tennessee Department of Public Health, 256 Capitol Hill Building, Nashville, TN 37219.

Knox County Department of Air Pollution, City/County Building, room L222, 400 Main Avenue, Knoxville, TN 37902.

Air Pollution Control Bureau, Metropolitan Health Department, 311 23rd Avenue North, Nashville, TN 37203.

(SS) State of Texas, Texas Air Control Board, 6330 Highway 290 East, Austin, TX 78723.

(TT) State of Utah, Division of Air Quality, Department of Environmental Quality, P.O. Box 144820, Salt Lake City, UT 84114–4820.

NOTE: For a table listing Region VIII's NESHAP delegation status, see paragraph (c) of this section.

(UU) State of Vermont, Air Pollution Control Division, Agency of Natural Resources, Building 3 South, 103 South Main Street, Waterbury, VT 05676.

(VV) Commonwealth of Virginia, Virginia State Air Pollution Control Board, room 1106, Ninth Street Office Building, Richmond, VA 23219.

(WW) State of Washington. (i) Washington State Department of Ecology (Ecology), P.O. Box 47600, Olympia, WA 98504–7600, *http://www.ecy.wa.gov/*.

(ii) Benton Clean Air Authority (BCAA), 650 George Washington Way, Richland, WA 99352–4289, *http://www.bcaa.net/*.

(iii) Northwest Air Pollution Control Authority (NWAPA), 1600 South Second St., Mount Vernon, WA 98273–5202, *http://www.nwair.org/*.

(iv) Olympic Air Pollution Control Authority (OAPCA), 909 Sleater-Kinney Road S.E., Suite 1, Lacey, WA 98503–1128, *http://www.oapca.org/*.

(v) Puget Sound Clean Air Agency (PSCAA), 110 Union Street, Suite 500, Seattle, WA 98101–2038, *http://www.pscleanair.org/*.

(vi) Spokane County Air Pollution Control Authority (SCAPCA), West 1101 College, Suite 403, Spokane, WA 9920, *http://www.scapca.org/*.

(vii) Southwest Clean Air Agency (SWCAA), 1308 NE 134th St., Vancouver, WA 98685–2747, *http://www.swcleanair.org/*.

(viii) Yakima Regional Clean Air Agency (YRCAA), Larson Building, Suite 1016, 6 South 2nd St., Yakima WA 98901, *http://co.yakima.wa.us/cleanair/default.htm*.

(ix) See paragraph (c)(10) of this section for a table indicating the delegation status of National Emission Standards for Hazardous Air Pollutants for Region 10—Alaska, Idaho, Oregon, and Washington.

(XX) State of West Virginia: Air Pollution Control Commission, 1558 Washington Street, East, Charleston, WV 25311.

(YY) Wisconsin—Wisconsin Department of Natural Resources, P.O. Box 7921, Madison, WI 53707.

(ZZ) State of Wyoming, Air Quality Division, Department of Environmental Quality, 122 W. 25th St., Cheyenne, WY 82002.

(AAA) Territory of Guam: Guam Environmental Protection Agency, Post Office Box 2999, Agana, Guam 96910.

NOTE: For tables listing the delegation status of agencies in Region IX, see paragraph (c)(9) of this section.

(BBB) Commonwealth of Puerto Rico: Commonwealth of Puerto Rico Environmental Quality Board, P.O. Box 11785, Santurce, PR 00910.

(CCC) U.S. Virgin Islands: U.S. Virgin Islands Department of Conservation and Cultural Affairs, P.O. Box 578, Charlotte Amalie, St. Thomas, U.S. Virgin Islands 00801.

(DDD) American Samoa Environmental Protection Agency, Pago Pago, American Samoa 96799.

NOTE: For tables listing the delegation status of agencies in Region IX, see paragraph (d) of this section.

(EEE) Commonwealth of the Northern Mariana Islands, Division of Environmental Quality, P.O. Box 1304, Saipan, MP 96950.

NOTE: For tables listing the delegation status of agencies in Region IX, see paragraph (d) of this section.

(c) The following tables list, by Region, the specific Part 61, National Emission Standards for Hazardous Air Pollutants that have been delegated to state and local agencies.

(1)–(7) [Reserved]

(8) The following is a table indicating the delegation status of National Emission Standards for Hazardous Air Pollutants in Region VIII.

REGION VIII—DELEGATION STATUS OF NATIONAL EMISSION STANDARDS FOR HAZARDOUS AIR POLLUTANTS [1]

Subpart	CO	MT	ND	SD	UT [2]	WY
A General Provisions	*	*	*	*	*	
B Radon Emissions from Underground Uranium Mines	.....	.....	.....	.....	*	
C Beryllium	*	*	*	.....	*	
D Beryllium Rocket Motor Firing	*	*	*	.....	*	
E Mercury	*	*	*	.....	*	
F Vinyl Chloride	*	*	*	.....	*	
H Emissions of Radionuclides other than Radon from Department of Energy Facilities	.....	.....	.....	.....	.....	
I Radionuclide Emissions from Facilities Licensed by the Nuclear Regulatory Commission and Federal Facilities not covered by Subpart H.						
J Equipment Leaks (Fugitive Emission Sources) of Benzene	*	*	*	.....	*	
K Radionuclide Emissions from Elemental Phosphorus Plants	.....	.....	.....	.....	.....	
L Benzene Emissions from Coke By-Product Recovery Plants	.....	*	*	.....	*	
M Asbestos	*	*	*	*	*	*3
N Inorganic Arsenic Emissions from Glass Manufacturing Plants	.....	*	*	.....	*	
O Inorganic Arsenic Emissions from Primary Copper Smelters	.....	*	*	.....	*	
P Inorganic Arsenic Emissions from Arsenic Trioxide and Metallic Arsenic Production Facilities	.....	*	*	.....	*	
Q Radon Emissions from Department of Energy Facilities	.....	.....	.....	.....	*	
R Radon Emission from Phosphogypsum Stacks	.....	.....	.....	.....	*	
T Radon Emissions from the Disposal of Uranium Mill Tailings	.....	.....	.....	.....	*	
V Equipment Leaks (Fugitive Emission Sources)	.....	*	*	.....	*	
W Radon Emissions from Operating Mill Tailings	.....	.....	.....	.....	*	
Y Benzene Emissions from Benzene Storage Vessels	.....	*	*	.....	*	
BB Benzene Emission from Benzene Transfer Operations	.....	*	*	.....	*	
FF Benzene Waste Operations	.....	*	*	.....	*	

*Indicates approval of delegation of subpart to state.

[1] Authorities which may not be delegated include 40 CFR 61.04(b), 61.12(d)(1), 61.13(h)(1)(ii), 61.112(c), 61.164(a)(2), 61.164(a)(3), 61.172(b)(2)(ii)(B), 61.172(b)(2)(ii)(C), 61.174 (a)(2), 61.174(a)(3), 61.242–1(c)(2), 61.244, and all authorities listed as not delegable in each subpart under Delegation of Authority.

[2] Indicates approval of National Emission Standards for Hazardous Air Pollutants as part of the State Implementation Plan (SIP) with the exception of the radionuclide NESHAP Subparts B, Q, R, T, W which were approved through Section 112(l) of the Clean Air Act.

[3] Delegation only for asbestos demolition, renovation, spraying, manufacturing, and fabricating operations, insulating materials, waste disposal for demolition, renovation, spraying, manufacturing and fabricating operations, inactive waste disposal sites for manufacturing and fabricating operations, and operations that convert asbestos-containing waste material into nonasbestos (asbestos-free) material.

(9) The following tables list the specific Part 61 standards that have been delegated unchanged to the air pollution control agencies in Region IX. The (X) symbol is used to indicate each standard that has been delegated. The following provisions of this subpart are not delegated: §§ 61.04(b), 61.04(c), 61.05(c), 61.11, 61.12(d), 61.13(h)(1)(ii), 61.14(d), 61.14(g)(1)(ii), and 61.16.

(i) *Arizona*. The following table identifies delegations as of June 15, 2001:

DELEGATION STATUS FOR NATIONAL EMISSIONS STANDARDS FOR HAZARDOUS AIR POLLUTANTS FOR ARIZONA

	Subpart	Air pollution control agency			
		Arizona DEQ	Maricopa County	Pima County	Pinal County
A	General Provisions	X	X	X	X
B	Radon Emissions From Underground Uranium	.....	.....	.....	.....
C	Beryllium	X	X	X	X
D	Beryllium Rocket Motor Firing	X	X	X	X
E	Mercury	X	X	X	X
F	Vinyl Chloride	X	X	X	X
G	(Reserved)	.....	.....	.....	.....
H	Emissions of Radionuclides Other Than Radon From Department of Energy Facilities.	.....	.....	.....	.....

DELEGATION STATUS FOR NATIONAL EMISSIONS STANDARDS FOR HAZARDOUS AIR POLLUTANTS FOR ARIZONA—Continued

	Subpart	Air pollution control agency			
		Arizona DEQ	Maricopa County	Pima County	Pinal County
I	Radionuclide Emissions From Federal Facilities Other Than Nuclear Regulatory Commission Licensees and Not Covered by Subpart H.	.....	.....	.....	.....
J	Equipment Leaks (Fugitive Emission Sources) of Benzene	X	X	X	X
K	Radionuclide Emissions From Elemental Phosphorus Plants	.....	.....	.....	.....
L	Benzene Emissions from Coke By-Product Recovery Plants	X	X	X	X
M	Asbestos	X	X	X	X
N	Inorganic Arsenic Emissions From Glass Manufacturing Plants	X	X	.....	X
O	Inorganic Arsenic Emissions From Primary Copper Smelters	X	X	.....	X
P	Inorganic Arsenic Emissions From Arsenic Trioxide and Metallic Arsenic Production Facilities.	X	X	.....	.....
Q	Radon Emissions From Department of Energy Facilities	.....	.....	.....	.....
R	Radon Emissions From Phosphogypsum Stacks	.....	.....	.....	.....
S	(Reserved)	.....	.....	.....	.....
T	Radon Emissions From the Disposal of Uranium Mill Tailings	.....	.....	.....	.....
U	(Reserved)	.....	.....	.....	.....
V	Equipment Leaks (Fugitive Emission Sources)	X	X	X	X
W	Radon Emissions From Operating Mill Tailings	.....	.....	.....	.....
X	(Reserved)	.....	.....	.....	.....
Y	Benzene Emissions From Benzene Storage Vessels	X	X	X	X
Z–AA	(Reserved)	.....	.....	.....	.....
BB	Benzene Emissions From Benzene Transfer Operations	X	X	X	X
CC–EE	(Reserved)	.....	.....	.....	.....
FF	Benzene Waste Operations	X	X	X	X

(ii) *California.* The following tables identify delegations for each of the local air pollution control agencies of California.

(A) Delegations for Amador County Air Pollution Control District, Antelope Valley Air Pollution Control District, Bay Area Air Quality Management District, and Butte County Air Pollution Control District are shown in the following table:

DELEGATION STATUS FOR NATIONAL EMISSIONS STANDARDS FOR HAZARDOUS AIR POLLUTANTS FOR AMADOR COUNTY APCD, ANTELOPE VALLEY APCD, BAY AREA AQMD, AND BUTTE COUNTY AQMD

	Subpart	Air pollution control agency			
		Amador County APCD	Antelope Valley APCD	Bay Area AQMD	Butte County AQMD
A	General Provisions	.....	.....	X	.....
B	Radon Emissions From Underground Uranium	.....	.....	.....	.....
C	Beryllium	.....	.....	X	.....
D	Beryllium Rocket Motor Firing	.....	.....	X	.....
E	Mercury	.....	.....	X	.....
F	Vinyl Chloride	.....	.....	X	.....
G	(Reserved)	.....	.....	.....	.....
H	Emissions of Radionuclides Other Than Radon From Department of Energy Facilities.	.....	.....	.....	.....
I	Radionuclide Emissions From Federal Facilities Other Than Nuclear Regulatory Commission Licensees and Not Covered by Subpart H.	.....	.....	.....	.....
J	Equipment Leaks (Fugitive Emission Sources) of Benzene	.....	.....	.....	.....
K	Radionuclide Emissions From Elemental Phosphorus Plants	.....	.....	.....	.....
L	Benzene Emissions from Coke By-Product Recovery Plants	.....	.....	X	.....
M	Asbestos	.....	.....	X	.....
N	Inorganic Arsenic Emissions From Glass Manufacturing Plants	.....	.....	.....	.....
O	Inorganic Arsenic Emissions From Primary Copper Smelters	.....	.....	.....	.....
P	Inorganic Arsenic Emissions From Arsenic Trioxide and Metallic Arsenic Production Facilities.	.....	.....	.....	.....
Q	Radon Emissions From Department of Energy Facilities	.....	.....	.....	.....
R	Radon Emissions From Phosphogypsum Stacks	.....	.....	.....	.....
S	(Reserved)	.....	.....	.....	.....

DELEGATION STATUS FOR NATIONAL EMISSIONS STANDARDS FOR HAZARDOUS AIR POLLUTANTS FOR AMADOR COUNTY APCD, ANTELOPE VALLEY APCD, BAY AREA AQMD, AND BUTTE COUNTY AQMD—Continued

	Subpart	Air pollution control agency			
		Amador County APCD	Antelope Valley APCD	Bay Area AQMD	Butte County AQMD
T	Radon Emissions From the Disposal of Uranium Mill Tailings				
U	(Reserved)				
V	Equipment Leaks (Fugitive Emission Sources)				
W	Radon Emissions From Operating Mill Tailings				
X	(Reserved)				
Y	Benzene Emissions From Benzene Storage Vessels			X	
Z–AA	(Reserved)				
BB	Benzene Emissions From Benzene Transfer Operations			X	
CC–EE	(Reserved)				
FF	Benzene Waste Operations			X	

(B) [Reserved]

(C) Delegations for Glenn County Air Pollution Control District, Great Basin Unified Air Pollution Control District, Imperial County Air Pollution Control District, and Kern County Air Pollution Control District are shown in the following table:

DELEGATION STATUS FOR NATIONAL EMISSIONS STANDARDS FOR HAZARDOUS AIR POLLUTANTS FOR GLENN COUNTY APCD, GREAT BASIN UNIFIED APCD, IMPERIAL COUNTY APCD, AND KERN COUNTY APCD

	Subpart	Air pollution control agency			
		Glenn County APCD	Great Basin Unified APCD	Imperial County APCD	Kern County APCD
A	General Provisions		X		X
B	Radon Emissions From Underground Uranium				
C	Beryllium		X		X
D	Beryllium Rocket Motor Firing		X		X
E	Mercury		X		X
F	Vinyl Chloride				X
G	(Reserved)				
H	Emissions of Radionuclides Other Than Radon From Department of Energy Facilities.				
I	Radionuclide Emissions From Federal Facilities Other Than Nuclear Regulatory Commission Licensees and Not Covered by Subpart H.				
J	Equipment Leaks (Fugitive Emission Sources) of Benzene				X
K	Radionuclide Emissions From Elemental Phosphorus Plants				
L	Benzene Emissions from Coke By-Product Recovery Plants				X
M	Asbestos		X		X
N	Inorganic Arsenic Emissions From Glass Manufacturing Plants				X
O	Inorganic Arsenic Emissions From Primary Copper Smelters				X
P	Inorganic Arsenic Emissions From Arsenic Trioxide and Metallic Arsenic Production Facilities.				X
Q	Radon Emissions From Department of Energy Facilities				
R	Radon Emissions From Phosphogypsum Stacks				
S	(Reserved)				
T	Radon Emissions From the Disposal of Uranium Mill Tailings				
U	(Reserved)				
V	Equipment Leaks (Fugitive Emission Sources)				X
W	Radon Emissions From Operating Mill Tailings				
X	(Reserved)				
Y	Benzene Emissions From Benzene Storage Vessels				X
Z–AA	(Reserved)				
BB	Benzene Emissions From Benzene Transfer Operations				X
CC–EE	(Reserved)				
FF	Benzene Waste Operations				X

(D) Delegations for Lake County Air Quality Management District, Lassen County Air Pollution Control District, Mariposa County Air Pollution Control District, and Mendocino County Air Pollution Control District are shown in the following table:

DELEGATION STATUS FOR NATIONAL EMISSIONS STANDARDS FOR HAZARDOUS AIR POLLUTANTS FOR LAKE COUNTY AIR QUALITY MANAGEMENT DISTRICT, LASSEN COUNTY AIR POLLUTION CONTROL DISTRICT, MARIPOSA COUNTY AIR POLLUTION CONTROL DISTRICT, AND MENDOCINO COUNTY AIR POLLUTION CONTROL DISTRICT

	Subpart	Air pollution control agency			
		Lake County AQMD	Lassen County APCD	Mariposa County AQMD	Mendocino County AQMD
A	General Provisions	X		X	
B	Radon Emissions From Underground Uranium				
C	Beryllium	X			X
D	Beryllium Rocket Motor Firing	X			X
E	Mercury	X			X
F	Vinyl Chloride				X
G	(Reserved)				
H	Emissions of Radionuclides Other Than Radon From Department of Energy Facilities.				
I	Radionuclide Emissions From Federal Facilities Other Than Nuclear Regulatory Commission Licensees and Not Covered by Subpart H.				
J	Equipment Leaks (Fugitive Emission Sources) of Benze				
K	Radionuclide Emissions From Elemental Phosphorus Plants				
L	Benzene Emissions from Coke By-Product Recovery Plants				
M	Asbestos	X			X

(E) Delegations for Modoc County Air Pollution Control District, Mojave Desert Air Quality Management District, Monterey Bay Unified Air Pollution Control District, and North Coast Unified Air Pollution Control District are shown in the following table:

DELEGATION STATUS FOR NATIONAL EMISSIONS STANDARDS FOR HAZARDOUS AIR POLLUTANTS FOR MODOC COUNTY AIR POLLUTION CONTROL DISTRICT, MOJAVE DESERT AIR QUALITY MANAGEMENT DISTRICT, MONTEREY BAY UNIFIED AIR POLLUTION CONTROL DISTRICT, AND NORTH COAST UNIFIED AIR POLLUTION CONTROL DISTRICT

	Subpart	Air pollution control agency			
		Modoc County APCD	Mojave Desert AQMD	Monterey Bay Unified APCD	North Coast Unified AQMD
A	General Provisions	X	X	X	X
B	Radon Emissions From Underground Uranium				
C	Beryllium	X	X	X	X
D	Beryllium Rocket Motor Firing	X	X	X	X
E	Mercury	X	X	X	X
F	Vinyl Chloride	X		X	X
G	(Reserved)				
H	Emissions of Radionuclides Other Than Radon From Department of Energy Facilities.				
I	Radionuclide Emissions From Federal Facilities Other Than Nuclear Regulatory Commission Licensees and Not Covered by Subpart H.				
J	Equipment Leaks (Fugitive Emission Sources) of Benzene	X		X	X
K	Radionuclide Emissions From Elemental Phosphorus Plants				
L	Benzene Emissions from Coke By-Product Recovery Plants			X	X
M	Asbestos	X	X	X	X
N	Inorganic Arsenic Emissions From Glass Manufacturing Plants			X	
O	Inorganic Arsenic Emissions From Primary Copper Smelters	X		X	
P	Inorganic Arsenic Emissions From Arsenic Trioxide and Metallic Arsenic Production Facilities.	X		X	
Q	Radon Emissions From Department of Energy Facilities				

DELEGATION STATUS FOR NATIONAL EMISSIONS STANDARDS FOR HAZARDOUS AIR POLLUTANTS FOR MODOC COUNTY AIR POLLUTION CONTROL DISTRICT, MOJAVE DESERT AIR QUALITY MANAGEMENT DISTRICT, MONTEREY BAY UNIFIED AIR POLLUTION CONTROL DISTRICT, AND NORTH COAST UNIFIED AIR POLLUTION CONTROL DISTRICT—Continued

	Subpart	Air pollution control agency			
		Modoc County APCD	Mojave Desert AQMD	Monterey Bay Unified APCD	North Coast Unified AQMD
R	Radon Emissions From Phosphogypsum Stacks				
S	(Reserved)				
T	Radon Emissions From the Disposal of Uranium Mill Tailings				
U	(Reserved)				
V	Equipment Leaks (Fugitive Emission Sources)	X		X	X
W	Radon Emissions From Operating Mill Tailings				
X	(Reserved)				
Y	Benzene Emissions From Benzene Storage Vessels			X	X
Z–AA	(Reserved)				
BB	Benzene Emissions From Benzene Transfer Operations			X	
CC–EE	(Reserved)				
FF	Benzene Waste Operations			X	

(F) Delegations for Northern Sierra Air Quality Management District, Northern Sonoma County Air Pollution Control District, Placer County Air Pollution Control District, and Sacramento Metropolitan Air Quality Management District are shown in the following table:

DELEGATION STATUS FOR NATIONAL EMISSIONS STANDARDS FOR HAZARDOUS AIR POLLUTANTS FOR NORTHERN SIERRA AIR QUALITY MANAGEMENT DISTRICT, NORTHERN SONOMA COUNTY AIR POLLUTION CONTROL DISTRICT, PLACER COUNTY AIR POLLUTION CONTROL DISTRICT, AND SACRAMENTO METROPOLITAN AIR QUALITY MANAGEMENT DISTRICT

	Subpart	Air pollution control agency			
		Northern Sierra AQMD	Northern Sonoma County APCD	Placer County APCD	Sacramento Metro AQMD
A	General Provisions		X		
B	Radon Emissions From Underground Uranium				
C	Beryllium		X		
D	Beryllium Rocket Motor Firing		X		
E	Mercury		X		
F	Vinyl Chloride		X		X
G	(Reserved)				
H	Emissions of Radionuclides Other Than Radon From Department of Energy Facilities.				
I	Radionuclide Emissions From Federal Facilities Other Than Nuclear Regulatory Commission Licensees and Not Covered by Subpart H.				
J	Equipment Leaks (Fugitive Emission Sources) of Benzene				
K	Radionuclide Emissions From Elemental Phosphorus Plants				
L	Benzene Emissions from Coke By-Product Recovery Plants				
M	Asbestos		X		X

(G) Delegations for San Diego County Air Pollution Control District, San Joaquin Valley Unified Air Pollution Control District, San Luis Obispo County Air Pollution Control District, and Santa Barbara County Air Pollution Control District are shown in the following table:

DELEGATION STATUS FOR NATIONAL EMISSIONS STANDARDS FOR HAZARDOUS AIR POLLUTANTS FOR SAN DIEGO COUNTY AIR POLLUTION CONTROL DISTRICT, SAN JOAQUIN VALLEY UNIFIED AIR POLLUTION CONTROL DISTRICT, SAN LUIS OBISPO COUNTY AIR POLLUTION CONTROL DISTRICT, AND SANTA BARBARA COUNTY AIR POLLUTION CONTROL DISTRICT

	Subpart	Air pollution control agency			
		San Diego County APCD	San Joaquin Valley APCD	San Luis Obispo County APCD	Santa Barbara County APCD
A	General Provisions	X	X	X	X
B	Radon Emissions From Underground Uranium				
C	Beryllium	X	X	X	X
D	Beryllium Rocket Motor Firing	X	X	X	X
E	Mercury	X	X	X	X
F	Vinyl Chloride	X	X	X	X
G	(Reserved)				
H	Emissions of Radionuclides Other Than Radon From Department of Energy Facilities.				
I	Radionuclide Emissions From Federal Facilities Other Than Nuclear Regulatory Commission Licensees and Not Covered by Subpart H.				
J	Equipment Leaks (Fugitive Emission Sources) of Benzene		X	X	X
K	Radionuclide Emissions From Elemental Phosphorus Plants				
L	Benzene Emissions from Coke By-Product Recovery Plants			X	X
M	Asbestos	X	X	X	X
N	Inorganic Arsenic Emissions From Glass Manufacturing Plants		X	X	X
O	Inorganic Arsenic Emissions From Primary Copper Smelters		X	X	X
P	Inorganic Arsenic Emissions From Arsenic Trioxide and Metallic Arsenic Production Facilities.		X	X	X
Q	Radon Emissions From Department of Energy Facilities				
R	Radon Emissions From Phosphogypsum Stacks				
S	(Reserved)				
T	Radon Emissions From the Disposal of Uranium Mill Tailings				
U	(Reserved)				
V	Equipment Leaks (Fugitive Emission Sources)		X	X	X
W	Radon Emissions From Operating Mill Tailings				
X	(Reserved)				
Y	Benzene Emissions From Benzene Storage Vessels			X	X
Z–AA	(Reserved)				
BB	Benzene Emissions From Benzene Transfer Operations			X	X
CC–EE	(Reserved)				
FF	Benzene Waste Operations		X	X	X

(H) Delegations for Shasta County Air Quality Management District, Siskiyou County Air Pollution Control District, South Coast Air Quality Management District, and Tehama County Air Pollution Control District are shown in the following table:

DELEGATION STATUS FOR NATIONAL EMISSIONS STANDARDS FOR HAZARDOUS AIR POLLUTANTS FOR SHASTA COUNTY AIR QUALITY MANAGEMENT DISTRICT, SISKIYOU COUNTY AIR POLLUTION CONTROL DISTRICT, SOUTH COAST AIR QUALITY MANAGEMENT DISTRICT, AND TEHAMA COUNTY AIR POLLUTION CONTROL DISTRICT

	Subpart	Air pollution control agency			
		Shasta County AQMD	Siskiyou County APCD	South Coast AQMD	Tehama County APCD
A	General Provisions			X	
B	Radon Emissions From Underground Uranium				
C	Beryllium	X		X	
D	Beryllium Rocket Motor Firing	X		X	
E	Mercury	X		X	
F	Vinyl Chloride	X		X	
G	(Reserved)				
H	Emissions of Radionuclides Other Than Radon From Department of Energy Facilities.				

DELEGATION STATUS FOR NATIONAL EMISSIONS STANDARDS FOR HAZARDOUS AIR POLLUTANTS FOR SHASTA COUNTY AIR QUALITY MANAGEMENT DISTRICT, SISKIYOU COUNTY AIR POLLUTION CONTROL DISTRICT, SOUTH COAST AIR QUALITY MANAGEMENT DISTRICT, AND TEHAMA COUNTY AIR POLLUTION CONTROL DISTRICT—Continued

	Subpart	Air pollution control agency			
		Shasta County AQMD	Siskiyou County APCD	South Coast AQMD	Tehama County APCD
I	Radionuclide Emissions From Federal Facilities Other Than Nuclear Regulatory Commission Licensees and Not Covered by Subpart H.	.....	.....	.....	.....
J	Equipment Leaks (Fugitive Emission Sources) of Benzene	.....	.....	X	.....
K	Radionuclide Emissions From Elemental Phosphorus Plants	.....	.....	.....	.....
L	Benzene Emissions from Coke By-Product Recovery Plants	.....	.....	X	.....
M	Asbestos	X	.....	X	.....
N	Inorganic Arsenic Emissions From Glass Manufacturing Plants	.....	.....	X	.....
O	Inorganic Arsenic Emissions From Primary Copper Smelters	.....	.....	X	.....
P	Inorganic Arsenic Emissions From Arsenic Trioxide and Metallic Arsenic Production Facilities.	.....	.....	X	.....
Q	Radon Emissions From Department of Energy Facilities	.....	.....	.....	.....
R	Radon Emissions From Phosphogypsum Stacks	.....	.....	.....	.....
S	(Reserved)	.....	.....	.....	.....
T	Radon Emissions From the Disposal of Uranium Mill Tailings	.....	.....	.....	.....
U	(Reserved)	.....	.....	.....	.....
V	Equipment Leaks (Fugitive Emission Sources)	.....	.....	X	.....
W	Radon Emissions From Operating Mill Tailings	.....	.....	.....	.....
X	(Reserved)	.....	.....	.....	.....
Y	Benzene Emissions From Benzene Storage Vessels	.....	.....	X	.....
Z–AA	(Reserved)	.....	.....	.....	.....
BB	Benzene Emissions From Benzene Transfer Operations	.....	.....	X	.....
CC–EE	(Reserved)	.....	.....	.....	.....
FF	Benzene Waste Operations	.....	.....	X	.....

(I) Delegations for Tuolumne County Air Pollution Control District, Ventura County Air Pollution Control District, and Yolo-Solano Air Quality Management District are shown in the following table:

DELEGATION STATUS FOR NATIONAL EMISSIONS STANDARDS FOR HAZARDOUS AIR POLLUTANTS FOR TUOLUMNE COUNTY AIR POLLUTION CONTROL DISTRICT, VENTURA COUNTY AIR POLLUTION CONTROL DISTRICT, AND YOLO-SOLANO AIR QUALITY MANAGEMENT DISTRICT

	Subpart	Air pollution control agency		
		Tuolumne County APCD	Ventura County APCD	Yolo-Solano AQMD
A	General Provisions	.....	X	.....
B	Radon Emissions From Underground Uranium	.....	.....	.....
C	Beryllium	.....	X	.....
D	Beryllium Rocket Motor Firing	.....	X	.....
E	Mercury	.....	X	X
F	Vinyl Chloride	.....	X	.....
G	(Reserved)	.....	.....	.....
H	Emissions of Radionuclides Other Than Radon From Department of Energy Facilities.	.....	.....	.....
I	Radionuclide Emissions From Federal Facilities Other Than Nuclear Regulatory Commission Licensees and Not Covered by Subpart H.	.....	.....	.....
J	Equipment Leaks (Fugitive Emission Sources) of Benzene	.....	X	.....
K	Radionuclide Emissions From Elemental Phosphorus Plants	.....	.....	.....
L	Benzene Emissions from Coke By-Product Recovery Plants	.....	X	.....
M	Asbestos	.....	X	X
N	Inorganic Arsenic Emissions From Glass Manufacturing Plants	.....	X	.....
O	Inorganic Arsenic Emissions From Primary Copper Smelters	.....	X	.....
P	Inorganic Arsenic Emissions From Arsenic Trioxide and Metallic Arsenic Production Facilities.	.....	X	.....
Q	Radon Emissions From Department of Energy Facilities	.....	.....	.....
R	Radon Emissions From Phosphogypsum Stacks	.....	.....	.....
S	(Reserved)	.....	.....	.....

DELEGATION STATUS FOR NATIONAL EMISSIONS STANDARDS FOR HAZARDOUS AIR POLLUTANTS FOR TUOLUMNE COUNTY AIR POLLUTION CONTROL DISTRICT, VENTURA COUNTY AIR POLLUTION CONTROL DISTRICT, AND YOLO-SOLANO AIR QUALITY MANAGEMENT DISTRICT—Continued

	Subpart	Air pollution control agency		
		Tuolumne County APCD	Ventura County APCD	Yolo-Solano AQMD
T	Radon Emissions From the Disposal of Uranium Mill Tailings			
U	(Reserved)			
V	Equipment Leaks (Fugitive Emission Sources)		X	
W	Radon Emissions From Operating Mill Tailings			
X	(Reserved)			
Y	Benzene Emissions From Benzene Storage Vessels		X	
Z–AA	(Reserved)			
BB	Benzene Emissions From Benzene Transfer Operations		X	
CC–EE	(Reserved)			
FF	Benzene Waste Operations		X	

(iii) *Hawaii.* The following table identifies delegations as of June 15, 2001:

DELEGATION STATUS FOR NATIONAL EMISSIONS STANDARDS FOR HAZARDOUS AIR POLLUTANTS FOR HAWAII

	Subpart	Hawaii
A	General Provisions	X
B	Radon Emissions From Underground Uranium	
C	Beryllium	
D	Beryllium Rocket Motor Firing	
E	Mercury	X
F	Vinyl Chloride	
G	(Reserved)	
H	Emissions of Radionuclides Other Than Radon From Department of Energy Facilities	
I	Radionuclide Emissions From Federal Facilities Other Than Nuclear Regulatory Commission Licensees and Not Covered by Subpart H.	
J	Equipment Leaks (Fugitive Emission Sources) of Benzene	X
K	Radionuclide Emissions From Elemental Phosphorus Plants	
L	Benzene Emissions from Coke By-Product Recovery Plants	
M	Asbestos	
N	Inorganic Arsenic Emissions From Glass Manufacturing Plants	
O	Inorganic Arsenic Emissions From Primary Copper Smelters	
P	Inorganic Arsenic Emissions From Arsenic Trioxide and Metallic Arsenic Production Facilities	
Q	Radon Emissions From Department of Energy Facilities	
R	Radon Emissions From Phosphogypsum Stacks	
S	(Reserved)	
T	Radon Emissions From the Disposal of Uranium Mill Tailings	
U	(Reserved)	
V	Equipment Leaks (Fugitive Emission Sources)	X
W	Radon Emissions From Operating Mill Tailings	
X	(Reserved)	
Y	Benzene Emissions From Benzene Storage Vessels	
Z–AA	(Reserved)	
BB	Benzene Emissions From Benzene Transfer Operations	X
CC–EE	(Reserved)	
FF	Benzene Waste Operations	X

(iv) *Nevada.* The following table identifies delegations as of June 15, 2001:

DELEGATION STATUS FOR NATIONAL EMISSIONS STANDARDS FOR HAZARDOUS AIR POLLUTANTS FOR NEVADA

	Subpart	Air Pollution Control Agency		
		Nevada DEP	Clark County	Washoe County
A	General Provisions		X	
B	Radon Emissions From Underground Uranium			
C	Beryllium	X	X	X
D	Beryllium Rocket Motor Firing	X	X	
E	Mercury	X	X	X
F	Vinyl Chloride	X	X	
G	(Reserved)			
H	Emissions of Radionuclides Other Than Radon From Department of Energy Facilities.			
I	Radionuclide Emissions From Federal Facilities Other Than Nuclear Regulatory Commission Licensees and Not Covered by Subpart H.			
J	Equipment Leaks (Fugitive Emission Sources) of Benzene			
K	Radionuclide Emissions From Elemental Phosphorus Plants			
L	Benzene Emissions from Coke By-Product Recovery Plants			
M	Asbestos	X	X	X

(10) The following table lists the delegation status of specific Part 61 Subparts that have been delegated unchanged to state and local air pollution control agencies in Region 10. An ''X'' indicates the subpart has been delegated, subject to all the conditions and limitations set forth in federal law, regulations, policy, guidance, and determinations. Some authorities cannot be delegated and are retained by EPA. These include certain General Provisions authorities and specific parts of some standards. The dates noted at the end of this table indicate the effective dates of federal rules that have been delegated. Any amendments made to these rules after this effective date are not delegated.

DELEGATION STATUS FOR PART 61 STANDARDS—REGION 10 [1]

Subpart [2]	AK	ID	Oregon		Washington							
	ADEC [3]	IDEQ [4]	ODEQ [5]	LRAPA [6]	Ecology [7]	BCAA [8]	NWAPA [9]	OAPCA [10]	PSCAA [11]	SCAPCA [12]	SWAPCA [13]	YRCAA [14]
A General Provisions [15]	X	X [4]	X	X	X	X	X	X	X	X	X	X
B Radon from Underground Uranium Mines												
C Beryllium		X [4]	X	X	X	X	X	X	X	X	X	X
D Beryllium Rocket Motor Firing		X [4]	X	X	X	X	X	X	X	X	X	X
E Mercury	X	X [4]	X	X	X	X	X	X	X	X	X	X
F Vinyl Chloride		X [4]	X	X	X	X	X	X	X	X	X	X
H Emissions of Radionuclides other than Radon from Dept of Energy facilities												
I Radionuclides from Federal Facilities other than Nuclear Regulatory Commission Licensees and not covered by Subpart H												
J Equipment Leaks of Benzene	X	X [4]	X	X	X	X	X	X	X	X	X	X
K Radionuclides from Elemental Phosphorus Plants												
L Benzene from Coke Recovery		X [4]	X	X	X	X	X	X	X	X	X	X
M Asbestos	X [3]	X [4]			X [7]	X [8]	X	X [10]	X	X	X	X
N Arsenic from Glass Plants		X [4]	X	X	X	X	X	X	X	X	X	X
O Arsenic from Primary Copper Smelters		X [4]	X	X	X	X	X	X	X	X	X	X
P Arsenic from Arsenic Production Facilities		X [4]	X	X	X	X	X	X	X	X	X	X
Q Radon from Dept of Energy facilities												
R Radon from Phosphogypsum Stacks												
T Radon from Disposal of Uranium Mill Tailings		X [4]										
V Equipment Leaks	X	X [4]	X	X	X	X	X	X	X	X	X	X
W Radon from Operating Mill Tailings												
Y Benzene from Benzene Storage Vessels	X	X [4]	X	X	X	X	X	X	X	X	X	X
BB Benzene from Benzene Transfer Operations		X [4]	X	X	X	X	X	X	X	X	X	X
FF Benzene Waste Operations	X		X	X	X	X	X	X	X	X	X	X

[1] Table last updated on August 9, 2002.

[2] Any authority within any subpart of this part (i.e. under ''Delegation of Authority'') that is identified as not delegatable, is not delegated.

[3] Alaska Department of Environmental Conservation (01/18/1997) Note: Alaska received delegation for § 61.145 and § 61.154 of subpart M (Asbestos), along with other sections and appendices which are referenced in § 61.145, as § 61.145 applies to sources required to obtain an operating permit under Alaska's regulations. Alaska has not received delegation for subpart M for sources not required to obtain an operating permit under Alaska's regulations.

[4] Idaho Department of Environmental Quality (07/01/2000) Note: Delegation of these part 61, Subparts applies only to those sources in Idaho required to obtain an operating permit under Title V of the Clean Air Act.

[5] Oregon Department of Environmental Quality (07/01/2001)

[6] Lane Regional Air Pollution Authority (07/01/2001)

[7] Washington Department of Ecology (02/20/2001) Note: Delegation of part 63, subpart M applies only to sources required to obtain an operating permit under Title V of the Clean Air Act, including Hanford. (Pursuant to RCW 70.105.240, only Ecology can enforce regulations at Hanford)

[8] Benton Clean Air Authority (02/20/2001) Note: Delegation of part 63, subpart M excludes Hanford, see note #6.

[9] Northwest Air Pollution Authority (07/01/2000)

[10] Olympic Air Pollution Control Authority (07/01/2000) Note: Delegation of part 63, subpart M applies only to sources required to obtain an operating permit under Title V of the Clean Air Act

[11] Puget Sound Clean Air Agency (07/01/1999)

[12] Spokane County Air Pollution Control Authority (02/20/2001)

[13] Southwest Air Pollution Control Authority (08/01/1998)

[14] Yakima Regional Clean Air Authority (07/01/2000)

[15] General Provisions Authorities which are not delegated include: §§ 61.04(b); 61.12(d)(1); 61.13(h)(1)(ii) for approval of major alternatives to test methods; § 61.14(g)(1)(ii) for approval of major alternatives to monitoring; § 61.16; § 61.53(c)(4); and any sections in the subparts pertaining to approval of alternative standards (i.e., alternative means of emission limitations), or approval of major alternatives to test methods or monitoring. For definitions of *minor, intermediate,* and *major* alternatives to test methods and monitoring, see 40 CFR 63.90.

[40 FR 18170, Apr. 25, 1975]

EDITORIAL NOTE: For FEDERAL REGISTER citations to §61.04 see the List of CFR Sections Affected, which appears in the Finding Aids section of the printed volume and on GPO Access.

EFFECTIVE DATE NOTE: At 68 FR 31615, May 28, 2003, §61.04 was amended by adding paragraph (c)(1), effective July 28, 2003. For the convenience of the user, the added text is set forth as follows:

§61.04 Address.

* * * * *

(c) * * *

(1) Inactive waste disposal sites not operated after July 9, 1981 within the State of New Hampshire must comply with the New Hampshire Regulations Applicable To Hazardous Air Pollutants, March 2003. The Director of the Federal Register approves this incorporation by reference in accordance with 5 U.S.C. 552(a) and 1 CFR part 51. You may obtain a copy from the Air and Radiation Docket and Information Center, U.S. EPA, EPA West Building, 1301 Constitution Avenue, NW., Washington, DC. You may examine this material at the above EPA office or at the Office of the Federal Register, 800 North Capitol Street, NW., Suite 700, Washington, DC.

* * * * *

§61.05 Prohibited activities.

(a) After the effective date of any standard, no owner or operator shall construct or modify any stationary source subject to that standard without first obtaining written approval from the Administrator in accordance with this subpart, except under an exemption granted by the President under section 112(c)(2) of the Act. Sources, the construction or modification of which commenced after the publication date of the standards proposed to be applicable to the sources, are subject to this prohibition.

(b) After the effective date of any standard, no owner or operator shall operate a new stationary source subject to that standard in violation of the standard, except under an exemption granted by the President under section 112(c)(2) of the Act.

(c) Ninety days after the effective date of any standard, no owner or operator shall operate any existing source subject to that standard in violation of the standard, except under a waiver granted by the Administrator under this part or under an exemption granted by the President under section 112(c)(2) of the Act.

(d) No owner or operator subject to the provisions of this part shall fail to report, revise reports, or report source test results as required under this part.

[38 FR 8826, Apr. 6, 1973, as amended at 50 FR 46291, Nov. 7, 1985]

§61.06 Determination of construction or modification.

An owner or operator may submit to the Administrator a written application for a determination of whether actions intended to be taken by the owner or operator constitute construction or modification, or commencement thereof, of a source subject to a standard. The Administrator will notify the owner or operator of his determination within 30 days after receiving sufficient information to evaluate the application.

[50 FR 46291, Nov. 7, 1985]

§61.07 Application for approval of construction or modification.

(a) The owner or operator shall submit to the Administrator an application for approval of the construction of any new source or modification of any existing source. The application shall be submitted before the construction or modification is planned to commence, or within 30 days after the effective date if the construction or modification had commenced before the effective date and initial startup has not occurred. A separate application shall be submitted for each stationary source.

(b) Each application for approval of construction shall include—

(1) The name and address of the applicant;

(2) The location or proposed location of the source; and

(3) Technical information describing the proposed nature, size, design, operating design capacity, and method of operation of the source, including a description of any equipment to be used

for control of emissions. Such technical information shall include calculations of emission estimates in sufficient detail to permit assessment of the validity of the calculations.

(c) Each application for approval of modification shall include, in addition to the information required in paragraph (b) of this section—

(1) The precise nature of the proposed changes;

(2) The productive capacity of the source before and after the changes are completed; and

(3) Calculations of estimates of emissions before and after the changes are completed, in sufficient detail to permit assessment of the validity of the calculations.

[50 FR 46291, Nov. 7, 1985]

§ 61.08 Approval of construction or modification.

(a) The Administrator will notify the owner or operator of approval or intention to deny approval of construction or modification within 60 days after receipt of sufficient information to evaluate an application under § 61.07.

(b) If the Administrator determines that a stationary source for which an application under § 61.07 was submitted will not cause emissions in violation of a standard if properly operated, the Administrator will approve the construction or modification.

(c) Before denying any application for approval of construction or modification, the Administrator will notify the applicant of the Administrator's intention to issue the denial together with—

(1) Notice of the information and findings on which the intended denial is based; and

(2) Notice of opportunity for the applicant to present, within such time limit as the Administrator shall specify, additional information or arguments to the Administrator before final action on the application.

(d) A final determination to deny any application for approval will be in writing and will specify the grounds on which the denial is based. The final determination will be made within 60 days of presentation of additional information or arguments, or 60 days after the final date specified for presentation if no presentation is made.

(e) Neither the submission of an application for approval nor the Administrator's approval of construction or modification shall—

(1) Relieve an owner or operator of legal responsibility for compliance with any applicable provisions of this part or of any other applicable Federal, State, or local requirement; or

(2) Prevent the Administrator from implementing or enforcing this part or taking any other action under the Act.

[50 FR 46291, Nov. 7, 1985]

§ 61.09 Notification of startup.

(a) The owner or operator of each stationary source which has an initial startup after the effective date of a standard shall furnish the Administrator with written notification as follows:

(1) A notification of the anticipated date of initial startup of the source not more than 60 days nor less than 30 days before that date.

(2) A notification of the actual date of initial startup of the source within 15 days after that date.

(b) If any State or local agency requires a notice which contains all the information required in the notification in paragraph (a) of this section, sending the Administrator a copy of that notification will satisfy paragraph (a) of this section.

[50 FR 46291, Nov. 7, 1985]

§ 61.10 Source reporting and waiver request.

(a) The owner or operator of each existing source or each new source which had an initial startup before the effective date shall provide the following information in writing to the Administrator within 90 days after the effective date:

(1) Name and address of the owner or operator.

(2) The location of the source.

(3) The type of hazardous pollutants emitted by the stationary source.

(4) A brief description of the nature, size, design, and method of operation of the stationary source including the operating design capacity of the source.

Identify each point of emission for each hazardous pollutant.

(5) The average weight per month of the hazardous materials being processed by the source, over the last 12 months preceding the date of the report.

(6) A description of the existing control equipment for each emission point including—

(i) Each control device for each hazardous pollutant; and

(ii) Estimated control efficiency (percent) for each control device.

(7) A statement by the owner or operator of the source as to whether the source can comply with the standards within 90 days after the effective date.

(b) The owner or operator of an existing source unable to comply with an applicable standard may request a waiver of compliance with that standard for a period not exceeding 2 years after the effective date. Any request shall be in writing and shall include the following information:

(1) A description of the controls to be installed to comply with the standard.

(2) A compliance schedule, including the date each step toward compliance will be reached. The list shall include as a minimum the following dates:

(i) Date by which contracts for emission control systems or process changes for emission control will be awarded, or date by which orders will be issued for the purchase of component parts to accomplish emission control or process changes;

(ii) Date of initiation of onsite construction or installation of emission control equipment or process change;

(iii) Date by which onsite construction or installation of emission control equipment or process change is to be completed; and

(iv) Date by which final compliance is to be achieved.

(3) A description of interim emission control steps which will be taken during the waiver period.

(c) Any change in the information provided under paragraph (a) of this section or §61.07(b) shall be provided to the Administrator within 30 days after the change. However, if any change will result from modification of the source, §§61.07(c) and 61.08 apply.

(d) A possible format for reporting under this section is included as appendix A of this part. Advice on reporting the status of compliance may be obtained from the Administrator.

(e) For the purposes of this part, time periods specified in days shall be measured in calendar days, even if the word ''calendar'' is absent, unless otherwise specified in an applicable requirement.

(f) For the purposes of this part, if an explicit postmark deadline is not specified in an applicable requirement for the submittal of a notification, application, report, or other written communication to the Administrator, the owner or operator shall postmark the submittal on or before the number of days specified in the applicable requirement. For example, if a notification must be submitted 15 days before a particular event is scheduled to take place, the notification shall be postmarked on or before 15 days preceding the event; likewise, if a notification must be submitted 15 days after a particular event takes place, the notification shall be postmarked on or before 15 days following the end of the event. The use of reliable non-Government mail carriers that provide indications of verifiable delivery of information required to be submitted to the Administrator, similar to the postmark provided by the U.S. Postal Service, or alternative means of delivery agreed to by the permitting authority, is acceptable.

(g) Notwithstanding time periods or postmark deadlines specified in this part for the submittal of information to the Administrator by an owner or operator, or the review of such information by the Administrator, such time periods or deadlines may be changed by mutual agreement between the owner or operator and the Administrator. Procedures governing the implementation of this provision are specified in paragraph (j) of this section.

(h) If an owner or operator of a stationary source in a State with delegated authority is required to submit reports under this part to the State, and if the State has an established timeline for the submission of reports that is consistent with the reporting frequency(ies) specified for such source

under this part, the owner or operator may change the dates by which reports under this part shall be submitted (without changing the frequency of reporting) to be consistent with the State's schedule by mutual agreement between the owner or operator and the State. The allowance in the previous sentence applies in each State beginning 1 year after the source is required to be in compliance with the applicable subpart in this part. Procedures governing the implementation of this provision are specified in paragraph (j) of this section.

(i) If an owner or operator supervises one or more stationary sources affected by standards set under this part and standards set under part 60, part 63, or both such parts of this chapter, he/she may arrange by mutual agreement between the owner or operator and the Administrator (or the State with an approved permit program) a common schedule on which reports required by each applicable standard shall be submitted throughout the year. The allowance in the previous sentence applies in each State beginning 1 year after the source is required to be in compliance with the applicable subpart in this part, or 1 year after the source is required to be in compliance with the applicable part 60 or part 63 standard, whichever is latest. Procedures governing the implementation of this provision are specified in paragraph (j) of this section.

(j)(1)(i) Until an adjustment of a time period or postmark deadline has been approved by the Administrator under paragraphs (j)(2) and (j)(3) of this section, the owner or operator of an affected source remains strictly subject to the requirements of this part.

(ii) An owner or operator shall request the adjustment provided for in paragraphs (j)(2) and (j)(3) of this section each time he or she wishes to change an applicable time period or postmark deadline specified in this part.

(2) Notwithstanding time periods or postmark deadlines specified in this part for the submittal of information to the Administrator by an owner or operator, or the review of such information by the Administrator, such time periods or deadlines may be changed by mutual agreement between the owner or operator and the Administrator. An owner or operator who wishes to request a change in a time period or postmark deadline for a particular requirement shall request the adjustment in writing as soon as practicable before the subject activity is required to take place. The owner or operator shall include in the request whatever information he or she considers useful to convince the Administrator that an adjustment is warranted.

(3) If, in the Administrator's judgment, an owner or operator's request for an adjustment to a particular time period or postmark deadline is warranted, the Administrator will approve the adjustment. The Administrator will notify the owner or operator in writing of approval or disapproval of the request for an adjustment within 15 calendar days of receiving sufficient information to evaluate the request.

(4) If the Administrator is unable to meet a specified deadline, he or she will notify the owner or operator of any significant delay and inform the owner or operator of the amended schedule.

[38 FR 8826, Apr. 6, 1973, as amended at 50 FR 46292, Nov. 7, 1985; 59 FR 12430, Mar. 16, 1994]

§ 61.11 Waiver of compliance.

(a) Based on the information provided in any request under § 61.10, or other information, the Administrator may grant a waiver of compliance with a standard for a period not exceeding 2 years after the effective date of the standard.

(b) The waiver will be in writing and will—

(1) Identify the stationary source covered;

(2) Specify the termination date of the waiver;

(3) Specify dates by which steps toward compliance are to be taken; and

(4) Specify any additional conditions which the Administrator determines necessary to assure installation of the necessary controls within the waiver period and to assure protection of the health of persons during the waiver period.

(c) The Administrator may terminate the waiver at an earlier date than specified if any specification under paragraphs (b)(3) and (b)(4) of this section are not met.

(d) Before denying any request for a waiver, the Administrator will notify the owner or operator making the request of the Administrator's intention to issue the denial, together with—

(1) Notice of the information and findings on which the intended denial is based; and

(2) Notice of opportunity for the owner or operator to present, within the time limit the Administrator specifies, additional information or arguments to the Administrator before final action on the request.

(e) A final determination to deny any request for a waiver will be in writing and will set forth the specific grounds on which the denial is based. The final determination will be made within 60 days after presentation of additional information or argument; or within 60 days after the final date specified for the presentation if no presentation is made.

(f) The granting of a waiver under this section shall not abrogate the Administrator's authority under section 114 of the Act.

[50 FR 46292, Nov. 7, 1985]

§61.12 Compliance with standards and maintenance requirements.

(a) Compliance with numerical emission limits shall be determined in accordance with emission tests established in §61.13 or as otherwise specified in an individual subpart.

(b) Compliance with design, equipment, work practice or operational standards shall be determined as specified in an individual subpart.

(c) The owner or operator of each stationary source shall maintain and operate the source, including associated equipment for air pollution control, in a manner consistent with good air pollution control practice for minimizing emissions. Determination of whether acceptable operating and maintenance procedures are being used will be based on information available to the Administrator which may include, but is not limited to, monitoring results, review of operating and maintenance procedures, and inspection of the source.

(d)(1) If, in the Administrator's judgment, an alternative means of emission limitation will achieve a reduction in emissions of a pollutant from a source at least equivalent to the reduction in emissions of that pollutant from that source achieved under any design, equipment, work practice or operational standard, the Administrator will publish in the FEDERAL REGISTER a notice permitting the use of the alternative means for purposes of compliance with the standard. The notice will restrict the permission to the source(s) or category(ies) of sources on which the alternative means will achieve equivalent emission reductions. The notice may condition permission on requirements related to the operation and maintenance of the alternative means.

(2) Any notice under paragraph (d)(1) shall be published only after notice and an opportunity for a hearing.

(3) Any person seeking permission under this subsection shall, unless otherwise specified in the applicable subpart, submit a proposed test plan or the results of testing and monitoring, a description of the procedures followed in testing or monitoring, and a description of pertinent conditions during testing or monitoring.

(e) For the purpose of submitting compliance certifications or establishing whether or not a person has violated or is in violation of any standard in this part, nothing in this part shall preclude the use, including the exclusive use, of any credible evidence or information, relevant to whether a source would have been in compliance with applicable requirements if the appropriate performance or compliance test had been performed.

[50 FR 46292, Nov. 7, 1985, as amended 62 FR 8328, Feb. 24, 1997]

§61.13 Emission tests and waiver of emission tests.

(a) If required to do emission testing by an applicable subpart and unless a waiver of emission testing is obtained under this section, the owner or operator shall test emissions from the source—

(1) Within 90 days after the effective date, for an existing source or a new source which has an initial startup date before the effective date; or

(2) Within 90 days after initial startup, for a new source which has an initial startup date after the effective date.

(b) The Administrator may require an owner or operator to test emissions from the source at any other time when the action is authorized by section 114 of the Act.

(c) The owner or operator shall notify the Administrator of the emission test at least 30 days before the emission test to allow the Administrator the opportunity to have an observer present during the test.

(d) If required to do emission testing, the owner or operator of each new source and, at the request of the Administrator, the owner or operator of each existing source shall provide emission testing facilities as follows:

(1) Sampling ports adequate for test methods applicable to each source.

(2) Safe sampling platform(s).

(3) Safe access to sampling platform(s).

(4) Utilities for sampling and testing equipment.

(5) Any other facilities that the Administrator needs to safely and properly test a source.

(e) Each emission test shall be conducted under such conditions as the Administrator shall specify based on design and operational characteristics of the source.

(f) Unless otherwise specified in an applicable subpart, samples shall be analyzed and emissions determined within 30 days after each emission test has been completed. The owner or operator shall report the determinations of the emission test to the Administrator by a registered letter sent before the close of business on the 31st day following the completion of the emission test.

(g) The owner or operator shall retain at the source and make available, upon request, for inspection by the Administrator, for a minimum of 2 years, records of emission test results and other data needed to determine emissions.

(h)(1) Emission tests shall be conducted as set forth in this section, the applicable subpart and appendix B unless the Administrator—

(i) Specifies or approves the use of a reference method with minor changes in methodology; or

(ii) Approves the use of an alternative method; or

(iii) Waives the requirement for emission testing because the owner or operator of a source has demonstrated by other means to the Administrator's satisfaction that the source is in compliance with the standard.

(2) If the Administrator finds reasonable grounds to dispute the results obtained by an alternative method, he may require the use of a reference method. If the results of the reference and alternative methods do not agree, the results obtained by the reference method prevail.

(3) The owner or operator may request approval for the use of an alternative method at any time, except—

(i) For an existing source or a new source that had an initial startup before the effective date, any request for use of an alternative method during the initial emission test shall be submitted to the Administrator within 30 days after the effective date, or with the request for a waiver of compliance if one is submitted under § 60.10(b); or

(ii) For a new source that has an initial startup after the effective date, any request for use of an alternative method during the initial emission test shall be submitted to the Administrator no later than with the notification of anticipated startup required under § 60.09.

(i)(1) Emission tests may be waived upon written application to the Administrator if, in the Administrator's judgment, the source is meeting the standard, or the source is being operated under a waiver or compliance, or the owner or operator has requested a waiver of compliance and the Administrator is still considering that request.

(2) If application for waiver of the emission test is made, the application shall accompany the information required by § 61.10 or the notification of startup required by § 61.09, whichever is applicable. A possible format is contained in appendix A to this part.

(3) Approval of any waiver granted under this section shall not abrogate the Administrator's authority under the Act or in any way prohibit the Administrator from later cancelling the waiver. The cancellation will be made only after notice is given to the owner or operator of the source.

[50 FR 46292, Nov. 7, 1985]

§61.14 Monitoring requirements.

(a) Unless otherwise specified, this section applies to each monitoring system required under each subpart which requires monitoring.

(b) Each owner or operator shall maintain and operate each monitoring system as specified in the applicable subpart and in a manner consistent with good air pollution control practice for minimizing emissions. Any unavoidable breakdown or malfunction of the monitoring system should be repaired or adjusted as soon as practicable after its occurrence. The Administrator's determination of whether acceptable operating and maintenance procedures are being used will be based on information which may include, but not be limited to, review of operating and maintenance procedures, manufacturer recommendations and specifications, and inspection of the monitoring system.

(c) When required by the applicable subpart, and at any other time the Administrator may require, the owner or operator of a source being monitored shall conduct a performance evaluation of the monitoring system and furnish the Administrator with a copy of a written report of the results within 60 days of the evaluation. Such a performance evaluation shall be conducted according to the applicable specifications and procedures described in the applicable subpart. The owner or operator of the source shall furnish the Administrator with written notification of the date of the performance evaluation at least 30 days before the evaluation is to begin.

(d) When the effluents from a single source, or from two or more sources subject to the same emission standards, are combined before being released to the atmosphere, the owner or operator shall install a monitoring system on each effluent or on the combined effluent. If two or more sources are not subject to the same emission standards, the owner or operator shall install a separate monitoring system on each effluent, unless otherwise specified. If the applicable standard is a mass emission standard and the effluent from one source is released to the atmosphere through more than one point, the owner or operator shall install a monitoring system at each emission point unless the installation of fewer systems is approved by the Administrator.

(e) The owner or operator of each monitoring system shall reduce the monitoring data as specified in each applicable subpart. Monitoring data recorded during periods of unavoidable monitoring system breakdowns, repairs, calibration checks, and zero and span adjustments shall not be included in any data average.

(f) The owner or operator shall maintain records of monitoring data, monitoring system calibration checks, and the occurrence and duration of any period during which the monitoring system is malfunctioning or inoperative. These records shall be maintained at the source for a minimum of 2 years and made available, upon request, for inspection by the Administrator.

(g)(1) Monitoring shall be conducted as set forth in this section and the applicable subpart unless the Administrator—

(i) Specifies or approves the use of the specified monitoring requirements and procedures with minor changes in methodology; or

(ii) Approves the use of alternatives to any monitoring requirements or procedures.

(2) If the Administrator finds reasonable grounds to dispute the results obtained by an alternative monitoring method, the Administrator may require the monitoring requirements and procedures specified in this part.

[50 FR 46293, Nov. 7, 1985]

§61.15 Modification.

(a) Except as provided under paragraph (d) of this section, any physical or operational change to a stationary source which results in an increase in the rate of emission to the atmosphere of a hazardous pollutant to which a

standard applies shall be considered a modification.

(b) Upon modification, an existing source shall become a new source for each hazardous pollutant for which the rate of emission to the atmosphere increases and to which a standard applies.

(c) Emission rate shall be expressed as kg/hr of any hazardous pollutant discharged into the atmosphere for which a standard is applicable. The Administrator shall use the following to determine the emission rate:

(1) Emission factors as specified in the background information document (BID) for the applicable standard, or in the latest issue of ''Compilation of Air Pollutant Emission Factors,'' EPA Publication No. AP–42, or other emission factors determined by the Administrator to be superior to AP–42 emission factors, in cases where use of emission factors demonstrates that the emission rate will clearly increase or clearly not increase as a result of the physical or operational change.

(2) Material balances, monitoring data, or manual emission tests in cases where use of emission factors, as referenced in paragraph (c)(1) of this section, does not demonstrate to the Administrator's satisfaction that the emission rate will clearly increase or clearly not increase as a result of the physical or operational change, or where an interested person demonstrates to the Administrator's satisfaction that there are reasonable grounds to dispute the result obtained by the Administrator using emission factors. When the emission rate is based on results from manual emission tests or monitoring data, the procedures specified in appendix C of 40 CFR part 60 shall be used to determine whether an increase in emission rate has occurred. Tests shall be conducted under such conditions as the Administrator shall specify to the owner or operator. At least three test runs must be conducted before and at least three after the physical or operational change. If the Administrator approves, the results of the emission tests required in § 61.13(a) may be used for the test runs to be conducted before the physical or operational change. All operating parameters which may affect emissions must be held constant to the maximum degree feasible for all test runs.

(d) The following shall not, by themselves, be considered modifications under this part:

(1) Maintenance, repair, and replacement which the Administrator determines to be routine for a source category.

(2) An increase in production rate of a stationary source, if that increase can be accomplished without a capital expenditure on the stationary source.

(3) An increase in the hours of operation.

(4) Any conversion to coal that meets the requirements specified in section 111(a)(8) of the Act.

(5) The relocation or change in ownership of a stationary source. However, such activities must be reported in accordance with § 61.10(c).

[50 FR 46294, Nov. 7, 1985]

§ 61.16 Availability of information.

The availability to the public of information provided to, or otherwise obtained by, the Administrator under this part shall be governed by part 2 of this chapter.

[38 FR 8826, Apr. 6, 1973. Redesignated at 50 FR 46294, Nov. 7, 1985]

§ 61.17 State authority.

(a) This part shall not be construed to preclude any State or political subdivision thereof from—

(1) Adopting and enforcing any emission limiting regulation applicable to a stationary source, provided that such emission limiting regulation is not less stringent than the standards prescribed under this part; or

(2) Requiring the owner or operator of a stationary source to obtain permits, licenses, or approvals prior to initiating construction, modification, or operation of the source.

[50 FR 46294, Nov. 7, 1985]

§ 61.18 Incorporations by reference.

The materials listed below are incorporated by reference in the corresponding sections noted. These incorporations by reference were approved by the Director of the Federal Register in accordance with 5 U.S.C.

552(a) and 1 CFR part 51. These materials are incorporated as they exist on the date of the approval, and a notice of any change in these materials will be published in the FEDERAL REGISTER. The materials are available for inspection at the corresponding address noted below, and at the Office of the Federal Register, 800 North Capitol Street, NW, Suite 700, Washington, DC and the Library (MD–35), or at U.S. EPA's Air Docket at 1200 Pennsylvania Avenue, NW, Washington, DC 20460.

(a) The following materials are available for purchase from at least one of the following addresses: American Society for Testing and Materials (ASTM) International, 100 Barr Harbor Drive, P.O. Box C700, West Conshohocken, PA, 19428–2959; or University Microfilms International, 300 North Zeeb Road, Ann Arbor, MI 48106.

(1) ASTM D737–75, Standard Test Method for Air Permeability of Textile Fabrics, incorporation by reference (IBR) approved January 27, 1983 for §61.23(a).

(2) ASTM D835–85, Standard Specification for Refined Benzene-485, IBR approved September 14, 1989 for §61.270(a).

(3) ASTM D836–84, Standard Specification for Industrial Grade Benzene, IBR approved September 14, 1989 for §61.270(a).

(4) ASTM D1193–77, 91, Standard Specification for Reagent Water, IBR approved for appendix B: Method 101, Section 7.1.1; Method 101A, Section 7.1.1; and Method 104, Section 7.1; Method 108, Section 7.1.3; Method 108A, Section 7.1.1; Method 108B, Section 7.1.1; Method 108C, Section 7.1.1; and Method 111, Section 7.3.

(5) ASTM D2267–68, 78, 88, Standard Test Method for Aromatics in Light Naphthas and Aviation Gasoline by Gas Chromatography, IBR approved September 30, 1986, for §61.67(h)(1).

(6) ASTM D2359–85a, 93, Standard Specification for Refined Benzene-535, IBR approved September 14, 1989 for §61.270(a).

(7) ASTM D2382–76, 88, Heat of Combustion of Hydrocarbon Fuels by Bomb Calorimeter (High-Precision Method), IBR approved June 6, 1984 for §61.245(e)(3).

(8) ASTM D2504–67, 77, 88 (Reapproved 1993), Noncondensable Gases in C_3 and Lighter Hydrocarbon Products by Gas Chromatography, IBR approved June 6, 1984 for §61.245(e)(3).

(9) ASTM D2879–83, Standard Test Method for Vapor Pressure—Temperature Relationship and Initial Decomposition Temperature of Liquids by Isoteniscope, IBR approved December 14, 2000 for §61.241.

(10) ASTM D2986–71, 78, 95a, Standard Method for Evaluation of Air, Assay Media by the Monodisperse DOP (Dioctyl Phthalate) Smoke Test, IBR approved for appendix B: Method 103, Section 6.1.3.

(11) ASTM D4420–94, Standard Test Method for Determination of Aromatics in Finished Gasoline by Gas Chromatography, IBR approved for §61.67(h)(1).

(12) ASTM D4734–87, 96, Standard Specification for Refined Benzene-545, IBR approved September 14, 1989 for §61.270(a).

(13) ASTM D4809–95, Standard Test Method for Heat of Combustion of Liquid Hydrocarbon Fuels by Bomb Calorimeter (Precision Method), IBR approved for §61.245(e)(3).

(14) ASTM E50–82, 86, 90 (Reapproved 1995), Standard Practices for Apparatus Reagents, and Safety Precautions for Chemical Analysis of Metals, IBR approved for appendix B: Method 108C, Section 6.1.4.

(b) The following material is available from the U.S. EPA Environmental Monitoring and Support Laboratory, Cincinnati, Ohio 45268.

(1) Method 601, Test Method for Purgeable Halocarbons, July 1982, IBR approved September 30, 1986, for §61.67(g)(2).

(c) The following material is available for purchase from the American National Standards Institute, 25 West 43rd Street, 4th Floor, New York, New York 10036.

(1) ANSI N13.1–1969, ''Guide to Sampling Airborne Radioactive Materials in Nuclear Facilities.'' IBR approved for 61.93(b)(2)(ii) and 61.107(b)(2)(ii).

(2) ANSI/HPS N13.1–1999 ''Sampling and Monitoring Releases of Airborne Radioactive Substances from the Stacks and Ducts of Nuclear Facilities,'' IBR approved October 9, 2002,

for §§ 61.93(c); 61.107(d) and Method 114, paragraph 2.1 of Appendix B to 40 CFR part 61.

(d) The following material is available from the Superintendent of Documents, U.S. Government Printing Office, Washington, DC 20402–9325, telephone (202) 512–1800 or outside of Washington, DC area: 1–866–512–1800.

(1) Test Methods for Evaluating Solid Waste, Physical/Chemical Methods, EPA Publication SW–846, Third Edition, November 1986, as amended by Revision I, December 1987, Order Number 955–001–00000–1:

(i) Method 8020, Aromatic Volatile Organics, IBR approved March 7, 1990, for § 61.355(c)(2)(iv)(A).

(ii) Method 8021, Volatile Organic Compounds in Water by Purge and Trap Capillary Column Gas Chromatography with Photoionization and Electrolytic Conductivity Detectors in Series, IBR approved March 7, 1990, for § 61.355(c)(2)(iv)(B).

(iii) Method 8240, Gas Chromatography/Mass Spectrometry for Volatile Organics, IBR approved March 7, 1990, for § 61.355(c)(2)(iv)(C).

(iv) Method 8260, Gas Chromatography/Mass Spectrometry for Volatile Organics: Capillary Column Technique, IBR approved March 7, 1990, for § 61.355(c)(2)(iv)(D).

(e) The materials listed in this paragraph (e) are available for purchase from the American Petroleum Institute (API), 1220 L Street, NW., Washington, DC 20005.

(1) API Publication 2517, Evaporative Loss from External Floating-Roof Tanks, Third Edition. February 1989. IBR approved December 14, 2000 for § 61.241.

(2) [Reserved]

[48 FR 3740, Jan. 27, 1983, as amended at 48 FR 55266, Dec. 9, 1983; 49 FR 23520, June 6, 1984; 51 FR 34914, Sept. 30, 1986; 54 FR 38073, Sept. 14, 1989; 54 FR 51704, Dec. 15, 1989; 55 FR 8341, Mar. 7, 1990; 55 FR 18331, May 2, 1990; 55 FR 22027, May 31, 1990; 55 FR 32914, Aug. 13, 1990; 65 FR 62150, Oct. 17, 2000; 65 FR 78280, Dec. 14, 2000; 67 FR 57166, Sept. 9, 2002]

§ 61.19 Circumvention.

No owner or operator shall build, erect, install, or use any article machine, equipment, process, or method, the use of which conceals an emission which would otherwise constitute a violation of an applicable standard. Such concealment includes, but is not limited to, the use of gaseous dilutants to achieve compliance with a visible emissions standard, and the piecemeal carrying out of an operation to avoid coverage by a standard that applies only to operations larger than a specified size.

[40 FR 48299, Oct. 14, 1975. Redesignated at 50 FR 46294, Nov. 7, 1985]

Subpart B—National Emission Standards for Radon Emissions From Underground Uranium Mines

SOURCE: 54 FR 51694, Dec. 15, 1989, unless otherwise noted.

§ 61.20 Designation of facilities.

The provisions of this subpart are applicable to the owner or operator of an active underground uranium mine which:

(a) Has mined, will mine or is designed to mine over 90,720 megagrams (Mg) (100,000 tons) of ore during the life of the mine; or

(b) Has had or will have an annual ore production rate greater than 9,072 Mg (10,000 tons), unless it can be demonstrated to EPA that the mine will not exceed total ore production of 90,720 Mg (100,000 tons) during the life of the mine.

[54 FR 51694, Dec. 15, 1989, as amended at 65 FR 62151, Oct. 17, 2000]

§ 61.21 Definitions.

As used in this subpart, all terms not defined here have the meaning given them in the Clean Air Act or subpart A of part 61. The following terms shall have the following specific meanings:

(a) *Active mine* means an underground uranium mine which is being ventilated to allow workers to enter the mine for any purpose.

(b) *Effective dose equivalent* means the sum of the products of the absorbed dose and appropriate effectiveness factors. These factors account for differences in biological effectiveness due to the quality of radiation and its distribution in the body of reference man.

The unit of the effective dose equivalent is the rem. The method for calculating effective dose equivalent and the definition of reference man are outlined in the International Commission on Radiological Protection's Publication No. 26.

(c) *Underground uranium mine* means a man-made underground excavation made for the purpose of removing material containing uranium for the principal purpose of recovering uranium.

[54 FR 51694, Dec. 15, 1989, as amended at 65 FR 62151, Oct. 17, 2000]

§61.22 Standard.

Emissions of radon-222 to the ambient air from an underground uranium mine shall not exceed those amounts that would cause any member of the public to receive in any year an effective dose equivalent of 10 mrem/y.

§61.23 Determining compliance.

(a) Compliance with the emission standard in this subpart shall be determined and the effective dose equivalent calculated by the U.S. Environmental Protection Agency (EPA) computer code COMPLY–R. An underground uranium mine owner or operator shall calculate the source terms to be used for input into COMPLY–R by conducting testing in accordance with the procedures described in appendix B, Method 115, or

(b) Owners or operators may demonstrate compliance with the emission standard in this subpart through the use of computer models that are equivalent to COMPLY–R provided that the model has received prior approval from EPA headquarters. EPA may approve a model in whole or in part and may limit its use to specific circumstances.

[54 FR 51694, Dec. 15, 1989, as amended at 65 FR 62151, Oct. 17, 2000]

§61.24 Annual reporting requirements.

(a) The mine owner or operator shall annually calculate and report the results of the compliance calculations in §61.23 and the input parameters used in making the calculations. This report shall cover the emissions of a calendar year and shall be sent to EPA by March 31 of the following year. Each report shall also include the following information:

(1) The name and location of the mine.

(2) The name of the person responsible for the operation of the facility and the name of the person preparing the report (if different).

(3) The results of the emissions testing conducted and the dose calculated using the procedures in §61.23.

(4) A list of the stacks or vents or other points where radioactive materials are released to the atmosphere, including their location, diameter, flow rate, effluent temperature and release height.

(5) A description of the effluent controls that are used on each stack, vent, or other release point and the effluent controls used inside the mine, and an estimate of the efficiency of each control method or device.

(6) Distances from the points of release to the nearest residence, school, business or office and the nearest farms producing vegetables, milk, and meat.

(7) The values used for all other user-supplied input parameters for the computer models (e.g., meteorological data) and the source of these data.

(8) Each report shall be signed and dated by a corporate officer in charge of the facility and contain the following declaration immediately above the signature line: ''I certify under penalty of law that I have personally examined and am familiar with the information submitted herein and based on my inquiry of those individuals immediately responsible for obtaining the information, I believe that the submitted information is true, accurate and complete. I am aware that there are significant penalties for submitting false information including the possibility of fine and imprisonment. See, 18 U.S.C. 1001.''

(b) lf the facility is not in compliance with the emission standard of §61.22 in the calendar year covered by the report, the facility must then commence reporting to the Administrator on a monthly basis the information listed in paragraph (a) of this section for the preceding month. These reports will start the month immediately following the submittal of the annual report for the year in noncompliance and will be

due 30 days following the end of each month. This increased level of reporting will continue until the Administrator has determined that the monthly reports are no longer necessary. In addition to all the information required in paragraph (a) of this section, monthly reports shall also include the following information:

(1) All controls or other changes in operation of the facility that will be or are being installed to bring the facility into compliance.

(2) If the facility is under a judicial or administrative enforcement decree the report will describe the facilities performance under the terms of the decree.

(c) The first report will cover the emissions of calendar year 1990.

[54 FR 51694, Dec. 15, 1989, as amended at 65 FR 62151, Oct. 17, 2000]

§ 61.25 Recordkeeping requirements.

The owner or operator of a mine must maintain records documenting the source of input parameters including the results of all measurements upon which they are based, the calculations and/or analytical methods used to derive values for input parameters, and the procedure used to determine compliance. In addition, the documentation should be sufficient to allow an independent auditor to verify the accuracy of the determination made concerning the facility's compliance with the standard. These records must be kept at the mine or by the owner or operator for at least five years and upon request be made available for inspection by the Administrator, or his authorized representative.

§ 61.26 Exemption from the reporting and testing requirements of 40 CFR 61.10.

All facilities designated under this subpart are exempt from the reporting requirements of 40 CFR 61.10.

Subpart C—National Emission Standard for Beryllium

§ 61.30 Applicability.

The provisions of this subpart are applicable to the following stationary sources:

(a) Extraction plants, ceramic plants, foundries, incinerators, and propellant plants which process beryllium ore, beryllium, beryllium oxide, beryllium alloys, or beryllium-containing waste.

(b) Machine shops which process beryllium, beryllium oxides, or any alloy when such alloy contains more than 5 percent beryllium by weight.

[38 FR 8826, Apr. 6, 1973, as amended at 65 FR 62151, Oct. 17, 2000]

§ 61.31 Definitions.

Terms used in this subpart are defined in the act, in subpart A of this part, or in this section as follows:

(a) *Beryllium* means the element beryllium. Where weights or concentrations are specified, such weights or concentrations apply to beryllium only, excluding the weight or concentration of any associated elements.

(b) *Extraction plant* means a facility chemically processing beryllium ore to beryllium metal, alloy, or oxide, or performing any of the intermediate steps in these processes.

(c) *Beryllium ore* means any naturally occurring material mined or gathered for its beryllium content.

(d) *Machine shop* means a facility performing cutting, grinding, turning, honing, milling, deburring, lapping, electrochemical machining, etching, or other similar operations.

(e) *Ceramic plant* means a manufacturing plant producing ceramic items.

(f) *Foundry* means a facility engaged in the melting or casting of beryllium metal or alloy.

(g) *Beryllium-containing waste* means material contaminated with beryllium and/or beryllium compounds used or generated during any process or operation performed by a source subject to this subpart.

(h) *Incinerator* means any furnace used in the process of burning waste for the primary purpose of reducing the volume of the waste by removing combustible matter.

(i) *Propellant* means a fuel and oxidizer physically or chemically combined which undergoes combustion to provide rocket propulsion.

(j) *Beryllium alloy* means any metal to which beryllium has been added in order to increase its beryllium content

and which contains more than 0.1 percent beryllium by weight.

(k) *Propellant plant* means any facility engaged in the mixing, casting, or machining of propellant.

§61.32 Emission standard.

(a) Emissions to the atmosphere from stationary sources subject to the provisions of this subpart shall not exceed 10 grams (0.022 lb) of beryllium over a 24-hour period, except as provided in paragraph (b) of this section.

(b) Rather than meet the requirement of paragraph (a) of this section, an owner or operator may request approval from the Administrator to meet an ambient concentration limit on beryllium in the vicinity of the stationary source of 0.01 $\mu g/m^3$ (4.37×10^{-6} gr/ft^3), averaged over a 30-day period.

(1) Approval of such requests may be granted by the Administrator provided that:

(i) At least 3 years of data is available which in the judgment of the Administrator demonstrates that the future ambient concentrations of beryllium in the vicinity of the stationary source will not exceed 0.01 $\mu g/m^3$ (4.37×10^{-6} gr/ft^3), averaged over a 30-day period. Such 3-year period shall be the 3 years ending 30 days before the effective date of this standard.

(ii) The owner or operator requests such approval in writing within 30 days after the effective date of this standard.

(iii) The owner or operator submits a report to the Administrator within 45 days after the effective date of this standard which report includes the following information:

(*a*) Description of sampling method including the method and frequency of calibration.

(*b*) Method of sample analysis.

(*c*) Averaging technique for determining 30-day average concentrations.

(*d*) Number, identity, and location (address, coordinates, or distance and heading from plant) of sampling sites.

(*e*) Ground elevations and height above ground of sampling inlets.

(*f*) Plant and sampling area plots showing emission points and sampling sites. Topographic features significantly affecting dispersion including plant building heights and locations shall be included.

(*g*) Information necessary for estimating dispersion including stack height, inside diameter, exit gas temperature, exit velocity or flow rate, and beryllium concentration.

(*h*) A description of data and procedures (methods or models) used to design the air sampling network (i.e., number and location of sampling sites).

(*i*) Air sampling data indicating beryllium concentrations in the vicinity of the stationary source for the 3-year period specified in paragraph (b)(1) of this section. This data shall be presented chronologically and include the beryllium concentration and location of each individual sample taken by the network and the corresponding 30-day average beryllium concentrations.

(2) Within 60 days after receiving such report, the Administrator will notify the owner or operator in writing whether approval is granted or denied. Prior to denying approval to comply with the provisions of paragraph (b) of this section, the Administrator will consult with representatives of the statutory source for which the demonstration report was submitted.

(c) The burning of beryllium and/or beryllium-containing waste, except propellants, is prohibited except in incinerators, emissions from which must comply with the standard.

[38 FR 8826, Apr. 6, 1973, as amended at 65 FR 62151, Oct. 17, 2000]

§61.33 Stack sampling.

(a) Unless a waiver of emission testing is obtained under §61.13, each owner or operator required to comply with §61.32(a) shall test emissions from the source according to Method 104 of appendix B to this part. Method 103 of appendix B to this part is approved by the Administrator as an alternative method for sources subject to §61.32(a). The emission test shall be performed—

(1) Within 90 days of the effective date in the case of an existing source or a new source which has an initial startup date preceding the effective date; or

(2) Within 90 days of startup in the case of a new source which did not have an initial startup date preceding the effective date.

(b) The Administrator shall be notified at least 30 days prior to an emission test so that he may at his option observe the test.

(c) Samples shall be taken over such a period or periods as are necessary to accurately determine the maximum emissions which will occur in any 24-hour period. Where emissions depend upon the relative frequency of operation of different types of processes, operating hours, operating capacities, or other factors, the calculation of maximum 24-hour-period emissions will be based on that combination of factors which is likely to occur during the subject period and which result in the maximum emissions. No changes in the operation shall be made, which would potentially increase emissions above that determined by the most recent source test, until a new emission level has been estimated by calculation and the results reported to the Administrator.

(d) All samples shall be analyzed and beryllium emissions shall be determined within 30 days after the source test. All determinations shall be reported to the Administrator by a registered letter dispatched before the close of the next business day following such determination.

(e) Records of emission test results and other data needed to determine total emissions shall be retained at the source and made available, for inspection by the Administrator, for a minimum of 2 years.

[38 FR 8826, Apr. 6, 1973, as amended at 50 FR 46294, Nov. 7, 1985]

§ 61.34 Air sampling.

(a) Stationary sources subject to § 61.32(b) shall locate air sampling sites in accordance with a plan approved by the Administrator. Such sites shall be located in such a manner as is calculated to detect maximum concentrations of beryllium in the ambient air.

(b) All monitoring sites shall be operated continuously except for a reasonable time allowance for instrument maintenance and calibration, for changing filters, or for replacement of equipment needing major repair.

(c) Filters shall be analyzed and concentrations calculated within 30 days after filters are collected. Records of concentrations at all sampling sites and other data needed to determine such concentrations shall be retained at the source and made available, for inspection by the Administrator, for a minimum of 2 years.

(d) Concentrations measured at all sampling sites shall be reported to the Administrator every 30 days by a registered letter.

(e) The Administrator may at any time require changes in, or expansion of, the sampling network.

Subpart D—National Emission Standard for Beryllium Rocket Motor Firing

§ 61.40 Applicability.

The provisions of this subpart are applicable to rocket motor test sites.

§ 61.41 Definitions.

Terms used in this subpart are defined in the Act, in subpart A of this part, or in this section as follows:

(a) *Rocket motor test site* means any building, structure, facility, or installation where the static test firing of a beryllium rocket motor and/or the disposal of beryllium propellant is conducted.

(b) *Beryllium propellant* means any propellant incorporating beryllium.

§ 61.42 Emission standard.

(a) Emissions to the atmosphere from rocket-motor test sites shall not cause time-weighted atmospheric concentrations of beryllium to exceed 75 microgram minutes per cubic meter (μg-min/m^3) (4.68 pound minutes per cubic foot (lb-min/ft^3)) of air within the limits of 10 to 60 minutes, accumulated during any 2 consecutive weeks, in any area in which an effect adverse to public health could occur.

(b) If combustion products from the firing of beryllium propellant are collected in a closed tank, emissions from such tank shall not exceed 2.0 g/hr (0.0044 lb/hr) and a maximum of 10 g/day (0.022 lb/day).

[38 FR 8826, Apr. 6, 1973, as amended at 65 FR 62151, Oct. 17, 2000]

§61.43 Emission testing—rocket firing or propellant disposal.

(a) Ambient air concentrations shall be measured during and after firing of a rocket motor or propellant disposal and in such a manner that the effect of these emissions can be compared with the standard. Such sampling techniques shall be approved by the Administrator.

(b) All samples shall be analyzed and results shall be calculated within 30 days after samples are taken and before any subsequent rocket motor firing or propellant disposal at the given site. All results shall be reported to the Administrator by a registered letter dispatched before the close of the next business day following determination of such results.

(c) Records of air sampling test results and other data needed to determine integrated intermittent concentrations shall be retained at the source and made available, for inspection by the Administrator, for a minimum of 2 years.

(d) The Administrator shall be notified at least 30 days prior to an air sampling test, so that he may at his option observe the test.

§61.44 Stack sampling.

(a) Sources subject to §61.42(b) shall be continuously sampled, during release of combustion products from the tank, according to Method 104 of appendix B to this part. Method 103 of appendix B to this part is approved by the Administrator as an alternative method for sources subject to §61.42(b).

(b) All samples shall be analyzed, and beryllium emissions shall be determined within 30 days after samples are taken and before any subsequent rocket motor firing or propellant disposal at the given site. All determinations shall be reported to the Administrator by a registered letter dispatched before the close of the next business day following such determinations.

(c) Records of emission test results and other data needed to determine total emissions shall be retained at the source and made available, for inspection by the Administrator, for a minimum of 2 years.

(d) The Administrator shall be notified at least 30 days prior to an emission test, so that he may at his option observe the test.

[38 FR 8826, Apr. 6, 1973, as amended at 50 FR 46294, Nov. 7, 1985]

Subpart E—National Emission Standard for Mercury

§61.50 Applicability.

The provisions of this subpart are applicable to those stationary sources which process mercury ore to recover mercury, use mercury chlor-alkali cells to produce chlorine gas and alkali metal hydroxide, and incinerate or dry wastewater treatment plant sludge.

[40 FR 48302, Oct. 14, 1975]

§61.51 Definitions.

Terms used in this subpart are defined in the act, in subpart A of this part, or in this section as follows:

(a) *Mercury* means the element mercury, excluding any associated elements, and includes mercury in particulates, vapors, aerosols, and compounds.

(b) *Mercury ore* means a mineral mined specifically for its mercury content.

(c) *Mercury ore processing facility* means a facility processing mercury ore to obtain mercury.

(d) *Condenser stack gases* mean the gaseous effluent evolved from the stack of processes utilizing heat to extract mercury metal from mercury ore.

(e) *Mercury chlor-alkali cell* means a device which is basically composed of an electrolyzer section and a denuder (decomposer) section and utilizes mercury to produce chlorine gas, hydrogen gas, and alkali metal hydroxide.

(f) *Mercury chlor-alkali electrolyzer* means an electrolytic device which is part of a mercury chlor-alkali cell and utilizes a flowing mercury cathode to produce chlorine gas and alkali metal amalgam.

(g) *Denuder* means a horizontal or vertical container which is part of a mercury chlor-alkali cell and in which water and alkali metal amalgam are converted to alkali metal hydroxide, mercury, and hydrogen gas in a short-circuited, electrolytic reaction.

(h) *Hydrogen gas stream* means a hydrogen stream formed in the chlor-alkali cell denuder.

(i) *End box* means a container(s) located on one or both ends of a mercury chlor-alkali electrolyzer which serves as a connection between the electrolyzer and denuder for rich and stripped amalgam.

(j) *End box ventilation system* means a ventilation system which collects mercury emissions from the end-boxes, the mercury pump sumps, and their water collection systems.

(k) *Cell room* means a structure(s) housing one or more mercury electrolytic chlor-alkali cells.

(l) *Sludge* means sludge produced by a treatment plant that processes municipal or industrial waste waters.

(m) *Sludge dryer* means a device used to reduce the moisture content of sludge by heating to temperatures above 65 °C (ca. 150 °F) directly with combustion gases.

[38 FR 8826, Apr. 6, 1973, as amended at 40 FR 48302, Oct. 14, 1975]

§ 61.52 Emission standard.

(a) Emissions to the atmosphere from mercury ore processing facilities and mercury cell chlor-alkali plants shall not exceed 2.3 kg (5.1 lb) of mercury per 24-hour period.

(b) Emissions to the atmosphere from sludge incineration plants, sludge drying plants, or a combination of these that process wastewater treatment plant sludges shall not exceed 3.2 kg (7.1 lb) of mercury per 24-hour period.

[40 FR 48302, Oct. 14, 1975, as amended at 65 FR 62151, Oct. 17, 2000]

§ 61.53 Stack sampling.

(a) *Mercury ore processing facility*. (1) Unless a waiver of emission testing is obtained under § 61.13, each owner or operator processing mercury ore shall test emissions from the source according to Method 101 of appendix B to this part. The emission test shall be performed—

(i) Within 90 days of the effective date in the case of an existing source or a new source which has an initial start-up date preceding the effective date; or

(ii) Within 90 days of startup in the case of a new source which did not have an initial startup date preceding the effective date.

(2) The Administrator shall be notified at least 30 days prior to an emission test, so that he may at his option observe the test.

(3) Samples shall be taken over such a period or periods as are necessary to accurately determine the maximum emissions which will occur in a 24-hour period. No changes in the operation shall be made, which would potentially increase emissions above that determined by the most recent source test, until the new emission level has been estimated by calculation and the results reported to the Administrator.

(4) All samples shall be analyzed and mercury emissions shall be determined within 30 days after the stack test. Each determination shall be reported to the Administrator by a registered letter dispatched within 15 calendar days following the date such determination is completed.

(5) Records of emission test results and other data needed to determine total emissions shall be retained at the source and made available, for inspection by the Administrator, for a minimum of 2 years.

(b) *Mercury chlor-alkali plant—hydrogen and end-box ventilation gas streams.* (1) Unless a waiver of emission testing is obtained under § 61.13, each owner or operator employing mercury chlor-alkali cell(s) shall test emissions from hydrogen streams according to Method 102 and from end-box ventilation gas streams according to Method 101 of appendix B to this part. The emission test shall be performed—

(i) Within 90 days of the effective date in the case of an existing source or a new source which has an initial startup date preceding the effective date; or

(ii) Within 90 days of startup in the case of a new source which did not have an initial startup date preceding the effective date.

(2) The Administrator shall be notified at least 30 days prior to an emission test, so that he may at his option observe the test.

(3) Samples shall be taken over such a period or periods as are necessary to

accurately determine the maximum emissions which will occur in a 24-hour period. No changes in the operation shall be made, which would potentially increase emissions above that determined by the most recent source test, until the new emission has been estimated by calculation and the results reported to the Administrator.

(4) All samples shall be analyzed and mercury emissions shall be determined within 30 days after the stack test. Each determination shall be reported to the Administrator by a registered letter dispatched within 15 calendar days following the date such determination is completed.

(5) Records of emission test results and other data needed to determine total emissions shall be retained at the source and made available, for inspection by the Administrator, for a minimum of 2 years.

(c) *Mercury chlor-alkali plants—cell room ventilation system.* (1) Stationary sources using mercury chlor-alkali cells may test cell room emissions in accordance with paragraph (c)(2) of this section or demonstrate compliance with paragraph (c)(4) of this section and assume ventilation emissions of 1.3 kg/day (2.9 lb/day) of mercury.

(2) Unless a waiver of emission testing is obtained under §61.13, each owner or operator shall pass all cell room air in force gas streams through stacks suitable for testing and shall test emissions from the source according to Method 101 in appendix B to this part. The emission test shall be performed—

(i) Within 90 days of the effective date in the case of an existing source or a new source which has an initial startup date preceding the effective date; or

(ii) Within 90 days of startup in the case of a new source which did not have an initial startup date preceding the effective date.

(3) The Administrator shall be notified at least 30 days prior to an emission test, so that he may at his option observe the test.

(4) An owner or operator may carry out approved design, maintenance, and housekeeping practices. A list of approved practices is provided in appendix A of ''Review of National Emission Standards for Mercury,'' EPA–450/3–84–014a, December 1984. Copies are available from EPA's Central Docket Section, Docket item number A–84–41, III–B–1.

(d) *Sludge incineration and drying plants.* (1) Unless a waiver of emission testing is obtained under §61.13, each owner or operator of a source subject to the standard in §61.52(b) shall test emissions from that source. Such tests shall be conducted in accordance with the procedures set forth either in paragraph (d) of this section or in §61.54.

(2) Method 101A in appendix B to this part shall be used to test emissions as follows:

(i) The test shall be performed within 90 days of the effective date of these regulations in the case of an existing source or a new source which has an initial startup date preceding the effective date.

(ii) The test shall be performed within 90 days of startup in the case of a new source which did not have an initial startup date preceding the effective date.

(3) The Administrator shall be notified at least 30 days prior to an emission test, so that he may at his option observe the test.

(4) Samples shall be taken over such a period or periods as are necessary to determine accurately the maximum emissions which will occur in a 24-hour period. No changes shall be made in the operation which would potentially increase emissions above the level determined by the most recent stack test, until the new emission level has been estimated by calculation and the results reported to the Administrator.

(5) All samples shall be analyzed and mercury emissions shall be determined within 30 days after the stack test. Each determination shall be reported to the Administrator by a registered letter dispatched within 15 calendar days following the date such determination is completed.

(6) Records of emission test results and other data needed to determine total emissions shall be retained at the source and shall be made available, for

inspection by the Administrator, for a minimum of 2 years.

[38 FR 8826, Apr. 6, 1973, as amended at 40 FR 48302, Oct. 14, 1975; 47 FR 24704, June 8, 1982; 50 FR 46294, Nov. 7, 1985; 52 FR 8726, Mar. 19, 1987; 65 FR 62151, Oct. 17, 2000]

§ 61.54 Sludge sampling.

(a) As an alternative means for demonstrating compliance with § 61.52(b), an owner or operator may use Method 105 of appendix B and the procedures specified in this section.

(1) A sludge test shall be conducted within 90 days of the effective date of these regulations in the case of an existing source or a new source which has an initial startup date preceding the effective date; or

(2) A sludge test shall be conducted within 90 days of startup in the case of a new source which did not have an initial startup date preceding the effective date.

(b) The Administrator shall be notified at least 30 days prior to a sludge sampling test, so that he may at his option observe the test.

(c) Sludge shall be sampled according to paragraph (c)(1) of this section, sludge charging rate for the plant shall be determined according to paragraph (c)(2) of this section, and the sludge analysis shall be performed according to paragraph (c)(3) of this section.

(1) The sludge shall be sampled according to Method 105—Determination of Mercury in Wastewater Treatment Plant Sewage Sludges. A total of three composite samples shall be obtained within an operating period of 24 hours. When the 24-hour operating period is not continuous, the total sampling period shall not exceed 72 hours after the first grab sample is obtained. Samples shall not be exposed to any condition that may result in mercury contamination or loss.

(2) The maximum 24-hour period sludge incineration or drying rate shall be determined by use of a flow rate measurement device that can measure the mass rate of sludge charged to the incinerator or dryer with an accuracy of ±5 percent over its operating range. Other methods of measuring sludge mass charging rates may be used if they have received prior approval by the Administrator.

(3) The sampling, handling, preparation, and analysis of sludge samples shall be accomplished according to Method 105 in appendix B of this part.

(d) The mercury emissions shall be determined by use of the following equation.

$$E_{Hg} = \frac{MQ\,F_{sm(avg)}}{1000}$$

where:

E_{Hg}=Mercury emissions, g/day.

M=Mercury concentration of sludge on a dry solids basis, μg/g.

Q=Sludge changing rate, kg/day.

F_{sm}=Weight fraction of solids in the collected sludge after mixing.

1000=Conversion factor, kg μg/g^2.

(e) No changes in the operation of a plant shall be made after a sludge test has been conducted which would potentially increase emissions above the level determined by the most recent sludge test, until the new emission level has been estimated by calculation and the results reported to the Administrator.

(f) All sludge samples shall be analyzed for mercury content within 30 days after the sludge sample is collected. Each determination shall be reported to the Administrator by a registered letter dispatched within 15 calendar days following the date such determination is completed.

(g) Records of sludge sampling, charging rate determination and other data needed to determine mercury content of wastewater treatment plant sludges shall be retained at the source and made available, for inspection by the Administrator, for a minimum of 2 years.

[40 FR 48303, Oct. 14, 1975, as amended at 49 FR 35770, Sept. 12, 1984; 52 FR 8727, Mar. 19, 1987; 53 FR 36972, Sept. 23, 1988]

§ 61.55 Monitoring of emissions and operations.

(a) *Wastewater treatment plant sludge incineration and drying plants.* All the sources for which mercury emissions exceed 1.6 kg (3.5 lb) per 24-hour period, demonstrated either by stack sampling according to § 61.53 or sludge sampling according to § 61.54, shall monitor mercury emissions at intervals of at least once per year by use of Method 105 of

appendix B or the procedures specified in §61.53 (d) (2) and (4). The results of monitoring shall be reported and retained according to §61.53(d) (5) and (6) or §61.54 (f) and (g).

(b) *Mercury cell chlor-alkali plants—hydrogen and end-box ventilation gas streams.* (1) The owner or operator of each mercury cell chlor-alkali plant shall, within 1 year of the date of publication of these amendments or within 1 year of startup for a plant with initial startup after the date of publication, perform a mercury emission test that demonstrates compliance with the emission limits in §61.52, on the hydrogen stream by Method 102 and on the end-box stream by Method 101 for the purpose of establishing limits for parameters to be monitored.

(2) During tests specified in paragraph (b)(1) of this section, the following control device parameters shall be monitored, except as provided in paragraph (c) of this section, and recorded manually or automatically at least once every 15 minutes:

(i) The exit gas temperature from uncontrolled streams;

(ii) The outlet temperature of the gas stream for the final (i.e., the farthest downstream) cooling system when no control devices other than coolers and demisters are used;

(iii) The outlet temperature of the gas stream from the final cooling system when the cooling system is followed by a molecular sieve or carbon adsorber;

(iv) Outlet concentration of available chlorine, pH, liquid flow rate, and inlet gas temperature of chlorinated brine scrubbers and hypochlorite scrubbers;

(v) The liquid flow rate and exit gas temperature for water scrubbers;

(vi) The inlet gas temperature of carbon adsorption systems; and

(vii) The temperature during the heating phase of the regeneration cycle for carbon adsorbers or molecular sieves.

(3) The recorded parameters in paragraphs (b)(2)(i) through (b)(2)(vi) of this section shall be averaged over the test period (a minimum of 6 hours) to provide an average number. The highest temperature reading that is measured in paragraph (b)(2)(vii) of this section is to be identified as the reference temperature for use in paragraph (b)(6)(ii) of this section.

(4)(i) Immediately following completion of the emission tests specified in paragraph (b)(1) of this section, the owner or operator of a mercury cell chlor-alkali plant shall monitor and record manually or automatically at least once per hour the same parameters specified in paragraphs (b)(2)(i) through (b)(2)(vi) of this section.

(ii) Immediately following completion of the emission tests specified in paragraph (b)(1) of this section, the owner or operator shall monitor and record manually or automatically, during each heating phase of the regeneration cycle, the temperature specified in paragraph (b)(2)(vii) of this section.

(5) Monitoring devices used in accordance with paragraphs (b)(2) and (b)(4) of this section shall be certified by their manufacturer to be accurate to within 10 percent, and shall be operated, maintained, and calibrated according to the manufacturer's instructions. Records of the certifications and calibrations shall be retained at the chlor-alkali plant and made available for inspection by the Administrator as follows: Certification, for as long as the device is used for this purpose; calibration for a minimum of 2 years.

(6)(i) When the hourly value of a parameter monitored in accordance with paragraph (b)(4)(i) of this section exceeds, or in the case of liquid flow rate and available chlorine falls below the value of that same parameter determined in paragraph (b)(2) of this section for 24 consecutive hours, the Administrator is to be notified within the next 10 days.

(ii) When the maximum hourly value of the temperature measured in accordance with paragraph (b)(4)(ii) of this section is below the reference temperature recorded according to paragraph (b)(3) of this section for three consecutive regeneration cycles, the Administrator is to be notified within the next 10 days.

(7) Semiannual reports shall be submitted to the Administrator indicating the time and date on which the hourly value of each parameter monitored according to paragraphs (b)(4)(i) and (b)(4)(ii) of this section fell outside the

value of that same parameter determined under paragraph (b)(3) of this section; and corrective action taken, and the time and date of the corrective action. Parameter excursions will be considered unacceptable operation and maintenance of the emission control system. In addition, while compliance with the emission limits is determined primarily by conducting a performance test according to the procedures in §61.53(b), reports of parameter excursions may be used as evidence in judging the duration of a violation that is determined by a performance test.

(8) Semiannual reports required in paragraph (b)(7) of this section shall be submitted to the Administrator on September 15 and March 15 of each year. The first semiannual report is to be submitted following the first full 6 month reporting period. The semiannual report due on September 15 (March 15) shall include all excursions monitored through August 31 (February 28) of the same calendar year.

(c) As an alternative to the monitoring, recordkeeping, and reporting requirements in paragraphs (b)(2) through (8) of this section, an owner or operator may develop and submit for the Administrator's review and approval a plant-specific monitoring plan. To be approved, such a plan must ensure not only compliance with the emission limits of §61.52(a) but also proper operation and maintenance of emissions control systems. Any site-specific monitoring plan submitted must, at a minimum, include the following:

(1) Identification of the critical parameter or parameters for the hydrogen stream and for the end-box ventilation stream that are to be monitored and an explanation of why the critical parameter(s) selected is the best indicator of proper control system performance and of mercury emission rates.

(2) Identification of the maximum or minimum value of each parameter (e.g., degrees temperature, concentration of mercury) that is not to be exceeded. The level(s) is to be directly correlated to the results of a performance test, conducted no more than 180 days prior to submittal of the plan, when the facility was in compliance with the emission limits of §61.52(a).

(3) Designation of the frequency for recording the parameter measurements, with justification if the frequency is less than hourly. A longer recording frequency must be justified on the basis of the amount of time that could elapse during periods of process or control system upsets before the emission limits would be exceeded, and consideration is to be given to the time that would be necessary to repair the failure.

(4) Designation of the immediate actions to be taken in the event of an excursion beyond the value of the parameter established in paragraph (c)(2) of this section.

(5) Provisions for reporting, semiannually, parameter excursions and the corrective actions taken, and provisions for reporting within 10 days any significant excursion.

(6) Identification of the accuracy of the monitoring device(s) or of the readings obtained.

(7) Recordkeeping requirements for certifications and calibrations.

(d) *Mercury cell chlor-alkali plants—cell room ventilation system.* (1) Stationary sources determining cell room emissions in accordance with §61.53(c)(4) shall maintain daily records of all leaks or spills of mercury. The records shall indicate the amount, location, time, and date the leaks or spills occurred, identify the cause of the leak or spill, state the immediate steps taken to minimize mercury emissions and steps taken to prevent future occurrences, and provide the time and date on which corrective steps were taken.

(2) The results of monitoring shall be recorded, retained at the source, and made available for inspection by the Administrator for a minimum of 2 years.

[52 FR 8727, Mar. 19, 1987, as amended at 65 FR 62151, Oct. 17, 2000]

§ 61.56 Delegation of authority.

(a) In delegating implementation and enforcement authority to a State under section 112(d) of the Act, the authorities contained in paragraph (b) of this section shall be retained by the

Administrator and not transferred to a State.

(b) Authorities which will not be delegated to States: Sections 61.53(c)(4) and 61.55(d). The authorities not delegated to States listed are in addition to the authorities in the General Provisions, subpart A of 40 CFR part 61, that will not be delegated to States (§§61.04(b), 61.12(d)(1), and 61.13(h)(1)(ii)).

[52 FR 8728, Mar. 19, 1987]

Subpart F—National Emission Standard for Vinyl Chloride

SOURCE: 41 FR 46564, Oct. 21, 1976, unless otherwise noted.

§61.60 Applicability.

(a) This subpart applies to plants which produce:

(1) Ethylene dichloride by reaction of oxygen and hydrogen chloride with ethylene,

(2) Vinyl chloride by any process, and/or

(3) One or more polymers containing any fraction of polymerized vinyl chloride.

(b) This subpart does not apply to equipment used in research and development if the reactor used to polymerize the vinyl chloride processed in the equipment has a capacity of no more than 0.19 m^3 (50 gal).

(c) Sections of this subpart other than §§61.61; 61.64 (a)(1), (b), (c), and (d); 61.67; 61.68; 61.69; 61.70; and 61.71 do not apply to equipment used in research and development if the reactor used to polymerize the vinyl chloride processed in the equipment has a capacity of greater than 0.19 m^3(50 gal) and no more than 4.17 m^3(1100 gal).

[41 FR 46564, Oct. 21, 1976, as amended at 42 FR 29006, June 7, 1977; 53 FR 36972, Sept. 23, 1988; 57 FR 60999, Dec. 23, 1992]

§61.61 Definitions.

Terms used in this subpart are defined in the Act, in subpart A of this part, or in this section as follows:

(a) *Ethylene dichloride plant* includes any plant which produces ethylene dichloride by reaction of oxygen and hydrogen chloride with ethylene.

(b) *Vinyl chloride plant* includes any plant which produces vinyl chloride by any process.

(c) *Polyvinyl chloride (PVC) plant* includes any plant where vinyl chloride alone or in combination with other materials is polymerized.

(d) *Slip gauge* means a gauge which has a probe that moves through the gas/liquid interface in a storage or transfer vessel and indicates the level of vinyl chloride in the vessel by the physical state of the material the gauge discharges.

(e) *Type of resin* means the broad classification of resin referring to the basic manufacturing process for producing that resin, including, but not limited to, the suspension, dispersion, latex, bulk, and solution processes.

(f) *Grade of resin* means the subdivision of resin classification which describes it as a unique resin, i.e., the most exact description of a resin with no further subdivision.

(g) *Dispersion resin* means a resin manufactured in such a way as to form fluid dispersions when dispersed in a plasticizer or plasticizer/diluent mixtures.

(h) *Latex resin* means a resin which is produced by a polymerization process which initiates from free radical catalyst sites and is sold undried.

(i) *Bulk resin* means a resin which is produced by a polymerization process in which no water is used.

(j) *Inprocess wastewater* means any water which, during manufacturing or processing, comes into direct contact with vinyl chloride or polyvinyl chloride or results from the production or use of any raw material, intermediate product, finished product, by-product, or waste product containing vinyl chloride or polyvinyl chloride but which has not been discharged to a wastewater treatment process or discharged untreated as wastewater. Gasholder seal water is not inprocess wastewater until it is removed from the gasholder.

(k) *Wastewater treatment process* includes any process which modifies characteristics such as BOD, COD, TSS, and pH, usually for the purpose of meeting effluent guidelines and standards; it does not include any process the purpose of which is to remove vinyl

chloride from water to meet requirements of this subpart.

(l) *In vinyl chloride service* means that a piece of equipment either contains or contacts a liquid that is at least 10 percent vinyl chloride by weight or a gas that is at least 10 percent by volume vinyl chloride as determined according to the provisions of § 61.67(h). The provisions of § 61.67(h) also specify how to determine that a piece of equipment is not in vinyl chloride service. For the purposes of this subpart, this definition must be used in place of the definition of ''in VHAP service'' in subpart V of this part.

(m) *Standard operating procedure* means a formal written procedure officially adopted by the plant owner or operator and available on a routine basis to those persons responsible for carrying out the procedure.

(n) *Run* means the net period of time during which an emission sample is collected.

(o) *Ethylene dichloride purification* includes any part of the process of ethylene dichloride purification following ethylene dichloride formation, but excludes crude, intermediate, and final ethylene dichloride storage tanks.

(p) *Vinyl chloride purification* incudes any part of the process of vinyl chloride production which follows vinyl chloride formation.

(q) *Reactor* includes any vessel in which vinyl chloride is partially or totally polymerized into polyvinyl chloride.

(r) *Reactor opening loss* means the emissions of vinyl chloride occurring when a reactor is vented to the atmosphere for any purpose other than an emergency relief discharge as defined in § 61.65(a).

(s) *Stripper* includes any vessel in which residual vinyl chloride is removed from polyvinyl chloride resin, except bulk resin, in the slurry form by the use of heat and/or vacuum. In the case of bulk resin, stripper includes any vessel which is used to remove residual vinyl chloride from polyvinyl chloride resin immediately following the polymerization step in the plant process flow.

(t) *Standard temperature* means a temperature of 20 °C (69 °F).

(u) *Standard pressure* means a pressure of 760 mm of Hg (29.92 in. of Hg).

(v) *Relief valve* means each pressure relief device including pressure relief valves, rupture disks and other pressure relief systems used to protect process components from overpressure conditions. ''Relief valve'' does not include polymerization shortstop systems, referigerated water systems or control valves or other devices used to control flow to an incinerator or other air pollution control device.

(w) *Leak* means any of several events that indicate interruption of confinement of vinyl chloride within process equipment. Leaks include events regulated under subpart V of this part such as:

(1) An instrument reading of 10,000 ppm or greater measured according to Method 21 (see appendix A of 40 CFR part 60);

(2) A sensor detection of failure of a seal system, failure of a barrier fluid system, or both;

(3) Detectable emissions as indicated by an instrument reading of greater than 500 ppm above background for equipment designated for no detectable emissions measured according to Method 21 (see appendix A of 40 CFR part 60); and

(4) In the case of pump seals regulated under § 61.242–2, indications of liquid dripping constituting a leak under § 61.242–2.

Leaks also include events regulated under § 61.65(b)(8)(i) for detection of ambient concentrations in excess of background concentrations. A relief valve discharge is not a leak.

(x) *Exhaust gas* means any offgas (the constituents of which may consist of any fluids, either as a liquid and/or gas) discharged directly or ultimately to the atmosphere that was initially contained in or was in direct contact with the equipment for which gas limits are prescribed in §§ 61.62(a) and (b); 61.63(a); 61.64 (a)(1), (b), (c), and (d); 61.65 (b)(1)(ii), (b)(2), (b)(3), (b)(5), (b)(6)(ii), (b)(7), and (b)(9)(ii); and 61.65(d). A leak as defined in paragraph (w) of this section is not an exhaust gas. Equipment which contains exhaust gas is subject to § 61.65(b)(8), whether or not that equipment contains 10 percent by volume vinyl chloride.

(y) *Relief valve discharge* means any nonleak discharge through a relief valve.

(z) *3-hour period* means any three consecutive 1-hour periods (each commencing on the hour), provided that the number of 3-hour periods during which the vinyl chloride concentration exceeds 10 ppm does not exceed the number of 1-hour periods during which the vinyl chloride concentration exceeds 10 ppm.

[41 FR 46564, Oct. 21, 1976, as amended at 42 FR 29006, June 7, 1977; 51 FR 34908, Sept. 30, 1986; 55 FR 28348, July 10, 1990; 65 FR 62151, Oct. 17, 2000]

§61.62 Emission standard for ethylene dichloride plants.

(a) *Ethylene dichloride purification.* The concentration of vinyl chloride in each exhaust gas stream from any equipment used in ethylene dichloride purification is not to exceed 10 ppm (average for 3-hour period), except as provided in §61.65(a). This requirement does not preclude combining of exhaust gas streams provided the combined steam is ducted through a control system from which the concentration of vinyl chloride in the exhaust gases does not exceed 10 ppm, or equivalent as provided in §61.66. This requirement does not apply to equipment that has been opened, is out of operation, and met the requirement in §61.65(b)(6)(i) before being opened.

(b) *Oxychlorination reactor.* Except as provided in §61.65(a), emissions of vinyl chloride to the atmosphere from each oxychlorination reactor are not to exceed 0.2 g/kg (0.4 lb/ton) (average for 3-hour period) of the 100 percent ethylene dichloride product from the oxychlorination process.

[51 FR 34909, Sept. 30, 1986, as amended at 65 FR 62151, Oct. 17, 2000]

§61.63 Emission standard for vinyl chloride plants.

An owner or operator of a vinyl chloride plant shall comply with the requirements of this section and §61.65.

(a) Vinyl chloride formation and purification: The concentration of vinyl chloride in each exhaust gas stream from any equipment used in vinyl chloride formation and/or purification is not to exceed 10 ppm (average for 3-hour period), except as provided in §61.65(a). This requirement does not preclude combining of exhaust gas streams provided the combined steam is ducted through a control system from which the concentration of vinyl chloride in the exhaust gases does not exceed 10 ppm, or equivalent as provided in §61.66. This requirement does not apply to equipment that has been opened, is out of operation, and met the requirement in §61.65(b)(6)(i) before being opened.

[51 FR 34909, Sept. 30, 1986]

§61.64 Emission standard for polyvinyl chloride plants.

An owner or operator of a polyvinyl chloride plant shall comply with the requirements of this section and §61.65.

(a) *Reactor.* The following requirements apply to reactors:

(1) The concentration of vinyl chloride in each exhaust gas stream from each reactor is not to exceed 10 ppm (average for 3-hour period), except as provided in paragraph (a)(2) of this section and §61.65(a).

(2) The reactor opening loss from each reactor is not to exceed 0.02 g vinyl chloride/kg (0.04 lb vinyl chloride/ton) of polyvinyl chloride product, except as provided in paragraph (f)(1) of this section, with the product determined on a dry solids basis. This requirement does not apply to prepolymerization reactors in the bulk process. This requirement does apply to postpolymerization reactors in the bulk process, where the product means the gross product of prepolymerization and postpolymerization.

(3) Manual vent valve discharge. Except for an emergency manual vent valve discharge, there is to be no discharge to the atmosphere from any manual vent valve on a polyvinyl chloride reactor in vinyl chloride service. An emergency manual vent valve discharge means a discharge to the atmosphere which could not have been avoided by taking measures to prevent the discharge. Within 10 days of any discharge to the atmosphere from any

manual vent valve, the owner or operator of the source from which the discharge occurs shall submit to the Administrator a report in writing containing information on the source, nature and cause of the discharge, the date and time of the discharge, the approximate total vinyl chloride loss during the discharge, the method used for determining the vinyl chloride loss (the calculation of the vinyl chloride loss), the action that was taken to prevent the discharge, and measures adopted to prevent future discharges.

(b) *Stripper.* The concentration of vinly chloride in each exhaust gas stream from each stripper is not to exceed 10 ppm (average for 3-hour period), except as provided in § 61.65(a). This requirement does not apply to equipment that has been opened, is out of operation, and met the requirement in § 61.65(b)(6)(i) before being opened.

(c) *Mixing, weighing, and holding containers.* The concentration of vinyl chloride in each exhaust gas stream from each mixing, weighing, or holding container in vinyl chloride service which precedes the stripper (or the reactor if the plant has no stripper) in the plant process flow is not to exceed 10 ppm (average for 3-hour period), except as provided in § 61.65(a). This requirement does not apply to equipment that has been opened, is out of operation, and met the requirement in § 61.65(b)(6)(i) before being opened.

(d) *Monomer recovery system.* The concentration of vinyl chloride in each exhaust gas stream from each monomer recovery system is not to exceed 10 ppm (average for 3-hour period), except as provided in § 61.65(a). This requirement does not apply to equipment that has been opened, is out of operation, and met the requirement in § 61.65(b)(6)(i) before being opened.

(e) *Sources following the stripper(s).* The following requirements apply to emissions of vinyl chloride to the atmosphere from the combination of all sources following the stripper(s) [or the reactor(s) if the plant has no stripper(s)] in the plant process flow including but not limited to, centrifuges, concentrators, blend tanks, filters, dryers, conveyor air discharges, baggers, storage containers, and inprocess wastewater, except as provided in paragraph (f) of this section:

(1) In polyvinyl chloride plants using stripping technology to control vinyl chloride emissions, the weighted average residual vinyl chloride concentration in all grades of polyvinyl chloride resin processed through the stripping operation on each calendar day, measured immediately after the stripping operation is completed, may not exceed:

(i) 2000 ppm for polyvinyl chloride dispersion resins, excluding latex resins;

(ii) 400 ppm for all other polyvinyl chloride resins, including latex resins, averaged separately for each type of resin; or

(2) In polyvinyl chloride plants controlling vinyl chloride emissions with technology other than stripping or in addition to stripping, emissions of vinyl chloride to the atmosphere may not exceed:

(i) 2 g/kg (4 lb/ton) product from the stripper(s) [or reactor(s) if the plant has no stripper(s)] for dispersion polyvinyl chloride resins, excluding latex resins, with the product determined on a dry solids basis;

(ii) 0.4 g/kg (0.8 lb/ton) product from the strippers [or reactor(s) if the plant has no stripper(s)] for all other polyvinyl chloride resins, including latex resins, with the product determined on a dry solids basis.

(3) The provisions of this paragraph apply at all times including when off-specification or other types of resins are made.

(f) *Reactor used as stripper.* When a nonbulk resin reactor is used as a stripper this paragraph may be applied in lieu of § 61.64 (a)(2) and (e)(1):

(1) The weighted average emissions of vinyl chloride from reactor opening loss and all sources following the reactor used as a stripper from all grades of polyvinyl chloride resin stripped in the reactor on each calendar day may not exceed:

(i) 2.02 g/kg (0.00202 lb/lb) of polyvinyl chloride product for dispersion polyvinyl chloride resins, excluding latex resins, with the product determined on a dry solids basis.

(ii) 0.42 g/kg (0.00042 lb/lb) of polyvinyl chloride product for all other polyvinyl chloride resins, including latex resins, with the product determined on a dry solids basis.

[41 FR 46564, Oct. 21, 1976, as amended at 51 FR 34909, Sept. 30, 1986; 53 FR 36972, Sept. 23, 1988; 65 FR 62151, Oct. 17, 2000]

EDITORIAL NOTE: At 65 FR 62151, Oct. 17, 2000, §61.64 was amended in paragraph (f)(2)(i) by revising the words ''2.02 g/kg (0.00202 lb/lb)'' to read ''2.02 g/kg (4.04 lb/ton), and in (f)(2)(ii) by revising the words ''0.42 g/kg (0.00042 lb/lb)'' to read ''0.42 g/kg (0.84 lb/ton). However, these paragraphs do not exist.

§61.65 Emission standard for ethylene dichloride, vinyl chloride and polyvinyl chloride plants.

An owner or operator of an ethylene dichloride, vinyl chloride, and/or polyvinyl chloride plant shall comply with the requirements of this section.

(a) *Relief valve discharge (RVD).* Except for an emergency relief discharge, and except as provided in §61.65(d), there is to be no discharge to the atmosphere from any relief valve on any equipment in vinyl chloride service. An emergency relief discharge means a discharge which could not have been avoided by taking measures to prevent the discharge. Within 10 days of any relief valve discharge, except for those subject to §61.65(d), the owner or operator of the source from which the relief valve discharge occurs shall submit to the Administrator a report in writing containing information on the source, nature and cause of the discharge, the date and time of the discharge, the approximate total vinyl chloride loss during the discharge, the method used for determining the vinyl chloride loss (the calculation of the vinyl chloride loss), the action that was taken to prevent the discharge, and measures adopted to prevent future discharges.

(b) *Fugitive emission sources*—(1) *Loading and unloading lines.* Vinyl chloride emissions from loading and unloading lines in vinyl chloride service which are opened to the atmosphere after each loading or unloading operation are to be minimized as follows:

(i) After each loading or unloading operation and before opening a loading or unloading line to the atmosphere, the quantity of vinyl chloride in all parts of each loading or unloading line that are to be opened to the atmosphere is to be reduced so that the parts combined contain no greater than 0.0038 m^3 (0.13 ft^3) of vinyl chloride, at standard temperature and pressure; and

(ii) Any vinyl chloride removed from a loading or unloading line in accordance with paragraph (b)(1)(i) of this section is to be ducted through a control system from which the concentration of vinyl chloride in the exhaust gases does not exceed 10 ppm (average for 3-hour period), or equivalent as provided in §61.66.

(2) *Slip gauges.* During loading or unloading operations, the vinyl chloride emissions from each slip gauge in vinyl chloride service are to be minimized by ducting any vinyl chloride discharged from the slip gauge through a control system from which the concentration of vinyl chloride in the exhaust gases does not exceed 10 ppm (average for 3-hour period), or equivalent as provided in §61.66.

(3) Leakage from pump, compressor, and agitator seals:

(i) *Rotating pumps.* Vinyl chloride emissions from seals on all rotating pumps in vinyl chloride service are to be minimized by installing sealless pumps, pumps with double mechanical seals or equivalent as provided in §61.66. If double mechanical seals are used, vinyl chloride emissions from the seals are to be minimized by maintaining the pressure between the two seals so that any leak that occurs is into the pump; by ducting any vinyl chloride between the two seals through a control system from which the concentration of vinyl chloride in the exhaust gases does not exceed 10 ppm; or equivalent as provided in §61.66. Compliance with the provisions of 40 CFR part 61 subpart V demonstrates compliance with the provisions of this paragraph.

(ii) *Reciprocating pumps.* Vinyl chloride emissions from seals on all reciprocating pumps in vinyl chloride service are to be minimized by installing double outboard seals, or equivalent as provided in §61.66. If double outboard seals are used, vinyl chloride emissions from the seals are to be minimized by maintaining the pressure between the two seals so that any leak that occurs

is into the pump; by ducting any vinyl chloride between the two seals through a control system from which the concentration of vinyl chloride in the exhaust gases does not exceed 10 ppm; or equivalent as provided in § 61.66. Compliance with the provisions of 40 CFR part 61 subpart V demonstrates compliance with the provisions of this paragraph.

(iii) *Rotating compressor.* Vinyl chloride emissions from seals on all rotating compressors in vinyl chloride service are to be minimized by installing compressors with double mechanical seals, or equivalent as provided in § 61.66. If double mechanical seals are used, vinyl chloride emissions from the seals are to be minimized by maintaining the pressure between the two seals so that any leak that occurs is into the compressor; by ducting any vinyl chloride between the two seals through a control system from which the concentration of vinyl chloride in the exhaust gases does not exceed 10 ppm; or equivalent as provided in § 61.66. Compliance with the provisions of 40 CFR part 61 subpart V demonstrates compliance with the provisions of this paragraph.

(iv) *Reciprocating compressors.* Vinyl chloride emissions from seals on all reciprocating compressors in vinyl chloride service are to be minimized by installing double outboard seals, or equivalent as provided in § 61.66. If double outboard seals are used, vinyl chloride emissions from the seals are to be minimized by maintaining the pressure between the two seals so that any leak that occurs is into the compressor; by ducting any vinyl chloride between the two seals through a control system from which concentration of vinyl chloride in the exhaust gases does not exceed 10 ppm; or equivalent as provided in § 61.66. Compliance with the provisions of 40 CFR part 61 subpart V demonstrates compliance with the provisions of this paragraph.

(v) *Agitator.* Vinyl chloride emissions from seals on all agitators in vinyl chloride service are to be minimized by installing agitators with double mechanical seals, or equivalent as provided in § 61.66. If double mechanical seals are used, vinyl chloride emissions from the seals are to be minimized by maintaining the pressure between the two seals so that any leak that occurs is into the agitated vessel; by ducting any vinyl chloride between the two seals through a control system from which the concentration of vinyl chloride in the exhaust gases does not exceed 10 ppm; or equivalent as provided in § 61.66.

(4) *Leaks from relief valves.* Vinyl chloride emissions due to leaks from each relief valve on equipment in vinyl chloride service shall comply with § 61.242–4 of subpart V of this part.

(5) *Manual venting of gases.* Except as provided in § 61.64(a)(3), all gases which are manually vented from equipment in vinly chloride service are to be ducted through a control system from which the concentration of vinyl chloride in the exhaust gases does not exceed 10 ppm (average for 3-hour period); or equivalent as provided in § 61.66.

(6) *Opening of equipment.* Vinyl chloride emissions from opening of equipment (excluding crude, intermediate, and final EDC storage tanks, but including prepolymerization reactors used in the manufacture of bulk resins and loading or unloading lines that are not opened to the atmosphere after each loading or unloading operation) are to be minimized follows:

(i) Before opening any equipment for any reason, the quantity of vinyl chloride which is contained therein is to be reduced to an amount which occupies a volume of no more than 2.0 percent of the equipment's containment volume or 0.0950 cubic meters (25 gallons), whichever is larger, at standard temperature and pressure.

(ii) Any vinyl chloride removed from the equipment in accordance with paragraph (b)(6)(i) of this section is to be ducted through a control system from which the concentration of vinyl chloride in the exhaust gases does not exceed 10 ppm (average for 3-hour period); or equivalent as provided in § 61.66.

(7) *Samples.* Unused portions of samples containing at least 10 percent by weight vinyl chloride are to be returned to the process or destroyed in a control device from which concentration of vinyl chloride in the exhaust gas does not exceed 10 ppm (average for

3-hour period) or equivalent as provided in §61.66. Sampling techniques are to be such that sample containers in vinyl chloride service are purged into a closed process system. Compliance with the provisions of 40 CFR part 61 subpart V demonstrates compliance with the provisions of this paragraph.

(8) *Leak detection and elimination.* Vinyl chloride emissions due to leaks from equipment in vinyl chloride service are to be minimized as follows:

(i) A reliable and accurate vinyl chloride monitoring system shall be operated for detection of major leaks and identification of the general area of the plant where a leak is located. A vinyl chloride monitoring system means a device which obtains air samples from one or more points on a continuous sequential basis and analyzes the samples with gas chromatography or, if the owner or operator assumes that all hydrocarbons measured are vinyl chloride, with infrared spectrophotometry, flame ion detection, or an equivalent or alternative method. The vinyl chloride monitoring system shall be operated according to a program developed by the plant owner or operator. The owner or operator shall submit a description of the program to the Administrator within 45 days of the effective date of these regulations, unless a waiver of compliance is granted under §61.11, or the program has been approved and the Administrator does not request a review of the program. Approval of a program will be granted by the Administrator provided he finds:

(A) The location and number of points to be monitored and the frequency of monitoring provided for in the program are acceptable when they are compared with the number of pieces of equipment in vinyl chloride service and size and physical layout of the plant.

(B) It contains a definition of leak which is acceptable when compared with the background concentrations of vinyl chloride in the areas of the plant to be monitored by the vinyl chloride monitoring system. Measurements of background concentrations of vinyl chloride in the areas of the plant to be monitored by the vinyl chloride monitoring system are to be included with the description of the program. The definition of leak for a given plant may vary among the different areas within the plant and is also to change over time as background concentrations in the plant are reduced.

(C) It contains an acceptable plan of action to be taken when a leak is detected.

(D) It provides for an acceptable calibration and maintenance schedule for the vinyl chloride monitoring system and portable hydrocarbon detector. For the vinyl chloride monitoring system, a daily span check is to be conducted with a concentration of vinyl chloride equal to the concentration defined as a leak according to paragraph (b)(8)(i)(B) of this section. The calibration is to be done with either:

(*1*) A calibration gas mixture prepared from the gases specified in sections 7.2.1 and 7.2.2 of Method 106 and in accordance with section 10.1 of Method 106, or

(*2*) A calibration gas cylinder standard containing the appropriate concentration of vinyl chloride. The gas composition of the calibration gas cylinder standard is to have been certified by the manufacturer. The manufacturer must have recommended a maximum shelf life for each cylinder so that the concentration does not change greater than ±5 percent from the certified value. The date of gas cylinder preparation, certified vinyl chloride concentration, and recommended maximum shelf life must have been affixed to the cylinder before shipment from the manufacturer to the buyer. If a gas chromatograph is used as the vinyl chloride monitoring system, these gas mixtures may be directly used to prepare a chromatograph calibration curve as described in Sections 8.1 and 9.2 of Method 106. The requirements in Sections 7.2.3.1 and 7.2.3.2 of Method 106 for certification of cylinder standards and for establishment and verification of calibration standards are to be followed.

(ii) For each process unit subject to this subpart, a formal leak detection and repair program shall be implemented consistent with subpart V of this part, except as provided in paragraph (b)(8)(iii) of this section. This program is to be implemented within 90

days of the effective date of these regulations, unless a waiver of compliance is granted under § 61.11. Except as provided in paragraph (b)(8)(ii)(E) of this section, an owner or operator shall be exempt from § 61.242–1(d), § 61.242–7 (a), (b), and (c), § 61.246, and § 61.247 of subpart V of this part for any process unit in which the percentage of leaking valves is demonstrated to be less than 2.0 percent, as determined in accordance with the following:

(A) A performance test as specified in paragraph (b)(8)(ii)(B) of this section shall be conducted initially within 90 days of the effective date of these regulations, annually, and at times requested by the Administrator.

(B) For each performance test, a minimum of 200 or 90 percent, whichever is less, of the total valves in VOC service (as defined in § 60.481 of subpart VV of part 60) within the process unit shall be randomly selected and monitored within 1 week by the methods specified in § 61.245(b) of this part. If an instrument reading of 10,000 ppm or greater is measured, a leak is detected. The leak percentage shall be determined by dividing the number of valves in VOC service for which leaks are detected by the number of tested valves in VOC service.

(C) If a leak is detected, it shall be repaired in accordance with § 61.242–7 (d) and (e) of subpart V of this part.

(D) The results of the performance test shall be submitted in writing to the Administrator in the first quarterly report following the performance test as part of the reporting requirements of § 61.70.

(E) Any process unit in which the percentage of leaking valves is found to be greater than 2.0 percent according to the performance test prescribed in paragraph (b)(8)(ii)(B) of this section must comply with all provisions of subpart V of this part within 90 days.

(iii) Open-ended valves or lines located on multiple service process lines which operate in vinyl chloride service less than 10 percent of the time are exempt from the requirements of § 61.242–6 of subpart V, provided the open-ended valves or lines are addressed in the monitoring system required by paragraph (b)(8)(i) of this section. The Administrator may apply this exemption to other existing open-ended valves or lines that are demonstrated to require significant retrofit cost to comply with the requirements of § 61.242–6 of subpart V.

(9) *Inprocess wastewater.* Vinyl chloride emissions to the atmosphere from inprocess wastewater are to be reduced as follows:

(i) The concentration of vinyl chloride in each inprocess wastewater stream containing greater than 10 ppm vinyl chloride measured immediately as it leaves a piece of equipment and before being mixed with any other inprocess wastewater stream is to be reduced to no more than 10 ppm by weight before being mixed with any other inprocess wastewater stream which contains less than 10 ppm vinyl chloride; before being exposed to the atmosphere; before being discharged to a wastewater treatment process; or before being discharged untreated as a wastewater. This paragraph does apply to water which is used to displace vinyl chloride from equipment before it is opened to the atmosphere in accordance with § 61.64(a)(2) or paragraph (b)(6) of this section, but does not apply to water which is used to wash out equipment after the equipment has already been opened to the atmosphere in accordance with § 61.64(a)(2) or paragraph (b)(6) of this section.

(ii) Any vinyl chloride removed from the inprocess wastewater in accordance with paragraph (b)(9)(i) of this section is to be ducted through a control system from which the concentration of vinyl chloride in the exhaust gases does not exceed 10 ppm (average for 3-hour period); or equivalent as provided in § 61.66.

(c) The requirements in paragraphs (b)(1), (b)(2), (b)(5), (b)(6), (b)(7) and (b)(8) of this section are to be incorporated into a standard operating procedure, and made available upon request for inspection by the Administrator. The standard operating procedure is to include provisions for measuring the vinyl chloride in equipment 4.75 m^3 (1255 gal) in volume for which an emission limit is prescribed in § 61.65(b)(6)(i) after opening the equipment and using Method 106, a portable

hydrocarbon detector, or an alternative method. The method of measurement is to meet the requirements in §61.67(g)(5)(i)(A) or (g)(5)(i)(B).

(d) A RVD that is ducted to a control device that is continually operating while emissions from the release are present at the device is subject to the following requirements:

(1) A discharge from a control device other than a flare shall not exceed 10 ppm (average over a 3-hour period) as determined by the continuous emission monitor system required under §61.68. Such a discharge is subject to the requirements of §61.70.

(2) For a discharge routed to a flare, the flare shall comply with the requirements of §60.18.

(i) Flare operations shall be monitored in accordance with the requirements of §§60.18(d) and 60.18(f)(2). For the purposes of §60.18(d), the volume and component concentration of each relief valve discharge shall be estimated and calculation shall be made to verify ongoing compliance with the design and operating requirements of §§60.18 (c)(3) through (c)(6). If more than one relief valve is discharged simultaneously to a single flare, these calculations shall account for the cumulative effect of all such relief valve discharges. These calculations shall be made and reported quarterly for all discharges within the quarter. Failure to comply with any of the requirements of this paragraph will be a violation of §61.65(d)(2). Monitoring for the presence of a flare pilot flame shall be conducted in accordance with §60.18(f)(2). If the results of this monitoring or any other information shows that the pilot flame is not present 100 percent of the time during which a relief valve discharge is routed to the flare, the relief valve discharge is subject to the provisions of §61.65(a).

(ii) A report describing the flare design shall be provided to the Administrator not later than 90 days after the adoption of this provision or within 30 days of the installation of a flare system for control of relief valve discharge whichever is later. The flare design report shall include calculations based upon expected relief valve discharge component concentrations and net heating values (for PVC this calculation shall be based on values expected if a release occurred at the instant the polymerization starts); and estimated maximum exit velocities based upon the design throat capacity of the gas in the relief valve.

[41 FR 46564, Oct. 21, 1976; 41 FR 53017, Dec. 3, 1976, as amended at 42 FR 29006, June 7, 1977; 51 FR 34910, Sept. 30, 1986; 53 FR 36972, Sept. 23, 1988; 55 FR 28348, July 10, 1990; 65 FR 62151, Oct. 17, 2000]

§61.66 Equivalent equipment and procedures.

Upon written application from an owner or operator, the Administrator may approve use of equipment or procedures which have been demonstrated to his satisfaction to be equivalent in terms of reducing vinyl chloride emissions to the atmosphere to those prescribed for compliance with a specific paragraph of this subpart.

[51 FR 34912, Sept. 30, 1986]

§61.67 Emission tests.

(a) Unless a waiver of emission testing is obtained under §61.13, the owner or operator of a source to which this subpart applies shall test emissions from the source,

(1) Within 90 days of the effective date in the case of an existing source or a new source which has an initial startup date preceding the effective date, or

(2) Within 90 days of startup in the case of a new source, initial startup of which occurs after the effective date.

(b) The owner or operator shall provide the Administrator at least 30 days prior notice of an emission test to afford the Administrator the opportunity to have an observer present during the test.

(c) Any emission test is to be conducted while the equipment being tested is operating at the maximum production rate at which the equipment will be operated and under other relevant conditions as may be specified by the Administrator based on representative performance of the source.

(d) [Reserved]

(e) When at all possible, each sample is to be analyzed within 24 hours, but in no case in excess of 72 hours of sample collection. Vinyl chloride emissions are to be determined within 30 days

after the emission test. The owner or operator shall report the determinations to the Administrator by a registered letter dispatched before the close of the next business day following the determination.

(f) The owner or operator shall retain at the plant and make available, upon request, for inspection by the Administrator, for a minimum of 3 years, records of emission test results and other data needed to determine emissions.

(g) Unless otherwise specified, the owner or operator shall use the test methods in appendix B to this part for each test as required by paragraphs (g)(1), (g)(2), (g)(3), (g)(4), and (g)(5) of this section, unless an alternative method has been approved by the Administrator. If the Administrator finds reasonable grounds to dispute the results obtained by an alternative method, he may require the use of a reference method. If the results of the reference and alternative methods do not agree, the results obtained by the reference method prevail, and the Administrator may notify the owner or operator that approval of the method previously considered to be alternative is withdrawn. Whenever Method 107 is specified, and the conditions in Section 1.2, ''Applicability'' of Method 107A are met, Method 107A may be used.

(1) Method 106 is to be used to determine the vinyl chloride emissions from any source for which an emission limit is prescribed in § 61.62(a) or (b), § 61.63(a), or § 61.64(a)(1), (b), (c), or (d), or from any control system to which reactor emissions are required to be ducted in § 61.64(a)(2) or to which fugitive emissions are required to be ducted in § 61.65(b)(1)(ii), (b)(2), (b)(5), (b)(6)(ii), or (b)(9)(ii).

(i) For each run, one sample is to be collected. The sampling site is to be at least two stack or duct diameters downstream and one half diameter upstream from any flow disturbance such as a bend, expansion, contraction, or visible flame. For a rectangular cross section, an equivalent diameter is to be determined from the following equation:

Equivalent diameter = 2(length)(width)/(length + width)

The sampling point in the duct is to be at the centroid of the cross section. The sample is to be extracted at a rate proportional to the gas velocity at the sampling point. The sample is to contain a minimum volume of 50 liters (1.8 ft^3) corrected to standard conditions and is to be taken over a period as close to 1 hour as practicable.

(ii) Each emission test is to consist of three runs. For the purpose of determining emissions, the average of results of all runs is to apply. The average is to be computed on a time weighted basis.

(iii) For gas streams containing more that 10 percent oxygen, the concentration of vinyl chloride as determined by Method 106 is to be corrected to 10 percent oxygen (dry basis) for determination of emissions by using the following equation:

$$C_{b(corrected)} = C_b\,(10.9)/(20.9 - \text{percent } O_2)$$

Where:

$C_{b(corrected)}$ = The concentration of vinyl chloride in the exhaust gases, corrected to 10 percent oxygen.

C_b = The concentration of vinyl chloride as measured by Method 106.

20.9 = Percent oxygen in the ambient air at standard conditions.

10.9 = Percent oxygen in the ambient air at standard conditions, minus the 10.0 percent oxygen to which the correction is being made.

Percent O_2 = Percent oxygen in the exhaust gas as measured by Method 3 of appendix A of part 60 of this chapter.

(iv) For those emission sources where the emission limit is prescribed in terms of mass rather than concentration, mass emissions are to be determined using the following equation:

$$C_{BX} = \frac{C_b D_{VC} Q K \left(10^{-6}\right)}{Z}$$

Where:

C_{BX} = Vinyl chloride emissions, g/kg (lb/lb) product.

C_b = Concentration of vinyl chloride as measured by Test Method 106, ppmv.

D_{VC} = Density of vinyl chloride at standard conditions, 2.60 kg/m^3 (0.162 lb/ft^3).

Q = Volumetric flow rate as determined by Method 2 of appendix A to part 60 of this chapter, m^3/hr (ft^3/hr).

K = Unit conversion factor, 1,000 g/kg (1 lb/lb).

10^{-6} = Conversion factor for ppm.

Z = Production rate, kg/hr (lb/hr).

(2) Method 107 or Method 601 (incorporated by reference as specified in §61.18) is to be used to determine the concentration of vinyl chloride in each inprocess wastewater stream for which an emission limit is prescribed in §61.65(b)(9)(i).

(3) When a stripping operation is used to attain the emission limits in §61.64(e) and (f), emissions are to be determined using Method 107 as follows:

(i) The number of strippers (or reactors used as strippers) and samples and the types and grades of resin to be sampled are to be determined by the Administrator for each individual plant at the time of the test based on the plant's operation.

(ii) Each sample is to be taken immediately following the stripping operation.

(iii) The corresponding quantity of material processed by each stripper (or reactor used as a stripper) is to be determined on a dry solids basis and by a method submitted to and approved by the Administrator.

(iv) At the prior request of the Administrator, the owner or operator shall provide duplicates of the samples required in paragraph (g)(3)(i) of this section.

(4) Where control technology other than or in addition to a stripping operation is used to attain the emission limit in §61.64(e), emissions are to be determined as follows:

(i) Method 106 is to be used to determine atmospheric emissions from all of the process equipment simultaneously. The requirements of paragraph (g)(1) of this section are to be met.

(ii) Method 107 is to be used to determine the concentration of vinyl chloride in each inprocess wastewater stream subject to the emission limit prescribed in §61.64(e). Vinyl chloride mass emissions are to be determined using the following equation:

$$C_{BX} = \frac{C_{rvc} Q_{water} D_{water} Q K \left(10^{-6}\right)}{Z}$$

Where:

C_{BX} = Vinyl chloride emissions, g/kg (lb/lb) product in each inprocess wastewater stream.

C_{rvc} = Concentration of vinyl chloride in wastewater, as measured by Method 107, ppmw.

D_{water} = Density of wastewater, 1.0 kg/m^3 (0.0624 lb/ft^3).

Q_{water} = Wastewater flow rate, determined in accordance with a method which has been submitted to and approved by the Administrator, m^3/hr (ft^3/hr).

K = Unit conversion factor, 1,000 g/kg (1 lb/lb).

10^{-6} = Conversion factor for ppm.

Z = Production rate, kg/hr (lb/hr), determined in accordance with a method which has been submitted to and approved by the Administrator.

(5) The reactor opening loss for which an emission limit is prescribed in §61.64(a)(2) is to be determined. The number of reactors for which the determination is to be made is to be specified by the Administrator for each individual plant at the time of the determination based on the plant's operation.

(i) Except as provided in paragraph (g)(5)(ii) of this section, the reactor opening loss is to be determined using the following equation:

$$C_{BX} = C_b \frac{V_R D_{VC} Q K \left(10^{-6}\right)}{Z}$$

Where:

C_{BX} = Vinyl chloride emissions, g/kg (lb/lb) product.

C_b = Concentration of vinyl chloride, in ppmv, as determined by Method 106 or a portable hydrocarbon detector which measures hydrocarbons with a sensitivity of at least 10 ppmv.

V_R = Capacity of the reactor, m^3 (ft^3).

D_{VC} = Density of vinyl chloride at standard conditions, 2.60 kg/m^3 (0.162 lb/ft^3).

K = Unit conversion factor, 1,000 g/kg (1 lb/lb).

10^{-6} = Conversion factor for ppm.

Z = Production rate, kg/hr (lb/hr).

(A) If Method 106 is used to determine the concentration of vinyl chloride (C_b), the sample is to be withdrawn at a constant rate with a probe of sufficient length to reach the vessel bottom from the manhole. Samples are to be taken for 5 minutes within 6 inches of the vessel bottom, 5 minutes near the vessel center, and 5 minutes near the vessel top.

(B) If a portable hydrocarbon detector is used to determine the concentration of vinyl chloride (C_b), a probe of

sufficient length to reach the vessel bottom from the manhole is to be used to make the measurements. One measurement will be made within 6 inches of the vessel bottom, one near the vessel center and one near the vessel top. Measurements are to be made at each location until the reading is stabilized. All hydrocarbons measured are to be assumed to be vinyl chloride.

(C) The production rate of polyvinyl chloride (Z), which is the product of the average batch weight and the number of batches produced since the reactor was last opened to the atmosphere, is to be determined by a method submitted to and approved by the Administrator.

(ii) A calculation based on the number of evacuations, the vacuum involved, and the volume of gas in the reactor is hereby approved by the Administrator as an alternative method for determining reactor opening loss for postpolymerization reactors in the manufacture of bulk resins. Calculation methods based on techniques other than repeated evacuation of the reactor may be approved by the Administrator for determining reactor opening loss for postpolymerization reactors in the manufacture of bulk resins.

(6) For a reactor that is used as a stripper, the emissions of vinyl chloride from reactor opening loss and all sources following the reactor used as a stripper for which an emission limit is prescribed in § 61.64(f) are to be determined. The number of reactors for which the determination is to be made is to be specified by the Administrator for each individual plant at the time of the determination based on the plant's operation.

(i) For each batch stripped in the reactor, the following measurements are to be made:

(A) The concentration of vinyl chloride in resin after stripping, measured according to paragraph (g)(3) of this section;

(B) The reactor vacuum at end of strip from plant instrument; and

(C) The reactor temperature at the end of strip from plant instrument.

(ii) For each batch stripped in the reactor, the following information is to be determined:

(A) The vapor pressure of water in the reactor at the end of strip from the following table:

METRIC UNITS

Reactor vapor temperature (°C)	H_2O vapor pressure (mm Hg)	Reactor vapor temperature (°C)	H_2O vapor pressure (mm Hg)	Reactor vapor temperature (°C)	H_2O vapor pressure (mm Hg)
40	55.3	62	163.8	84	416.8
41	58.3	63	171.4	85	433.6
42	61.5	64	179.3	86	450.9
43	64.8	65	187.5	87	468.7
44	68.3	66	196.1	88	487.1
45	71.9	67	205.0	89	506.1
46	75.6	68	214.2	90	525.8
47	79.6	69	223.7	91	546.0
48	83.7	70	233.7	92	567.0
49	88.0	71	243.9	93	588.6
50	92.5	72	254.6	94	610.9
51	97.2	73	265.7	95	633.9
52	102.1	74	277.2	96	657.6
53	107.2	75	289.1	97	682.1
54	112.5	76	301.4	98	707.3
55	118.0	77	314.1	99	733.2
56	123.8	78	327.3	100	760.0
57	129.8	79	341.0		
58	136.1	80	355.1		
59	142.6	81	369.7		
60	149.4	82	384.9		
61	156.4	83	400.6		

ENGLISH UNITS

Reactor vapor temperature (°F)	H_2O vapor pressure (psia)	Reactor vapor temperature (°F)	H_2O vapor pressure (psia)	Reactor vapor temperature (°F)	H_2O vapor pressure (psia)
104	1.07	144	3.167	183	8.060
106	1.13	145	3.314	185	8.384
108	1.19	147	3.467	187	8.719
109	1.25	149	3.626	189	9.063
111	1.32	151	3.792	190	9.419
113	1.39	153	3.964	192	9.786
115	1.46	154	4.142	194	10.17
117	1.54	156	4.326	196	10.56
118	1.62	158	4.519	198	10.96
120	1.70	160	4.716	199	11.38
122	1.79	162	4.923	201	11.81
124	1.88	163	5.138	203	12.26
126	1.974	165	5.360	205	12.72
127	2.073	167	5.590	207	13.19
129	2.175	169	5.828	208	13.68
131	2.282	170	6.074	210	14.18
133	2.394	172	6.329	212	14.70
135	2.510	174	6.594		
136	2.632	176	6.866		
138	2.757	178	7.149		
140	2.889	180	7.443		
142	3.024	181	7.746		

(B) The partial pressure of vinyl chloride in reactor at end of strip from the following equation:

$$PP_{VC} = P_{ATM} - P_{RV} - P_W$$

Where:

PP_{VC} = Partial pressure of vinyl chloride, mm Hg (psia)

P_{ATM} = Atmospheric pressure at 0 °C (32 °F), 760 mm Hg (14.7 psia)

P_{RV} = Absolute pressure of reactor vacuum, mm Hg (psia)

P_W = Vapor pressure of water, mm Hg (psia)

(C) The reactor vapor space volume at the end of the strip from the following equation:

$$V_{RVS} = V_R - V_W - \frac{W_{PVC}}{D_{PVC}}$$

Where:

V_{RVS} = Reactor vapor space volume, m^3 (ft^3)

V_R = Reactor capacity, m^3 (ft^3)

V_W = Volume of water in reactor from recipe, m^3 (ft^3)

W_{PVC} = Dry weight of polyvinyl chloride in reactor from recipe, kg (lb)

D_{PVC} = Typical density of polyvinyl chloride, 1,400 kg/m^3 (87.4 lb/ft^3)

(iii) For each batch stripped in the reactor, the combined reactor opening loss and emissions from all sources following the reactor used as a stripper is to be determined using the following equation:

$$C_{BX} = K_1\left(PPM_{VC}\right) + \frac{\left(PP_{VC}\right)\left(V_{RVS}\right)\left(R_{VC}\right)}{\left(M_{VC}\right)\left(T_R + K_T\right)}$$

Where:

C_{BX} = Vinyl chloride emissions, g/kg (lb/lb) product.

PPM_{VC} = Concentration of vinyl chloride in resin after stripping, ppmw

K_1 = Conversion factor from ppmw to units of emission standard, 0.001 (metric units) = 0.002 (English units)

PP_{VC} = Partial pressure of vinyl chloride determined according to paragraph (g)(6)(ii)(B) of this section, mm Hg (psia)

V_{RVS} = Reactor vapor space volume determined according to paragraph (g)(6)(ii)(C) of this section, m^3 (ft^3)

R_{VC} = Ideal gas constant for vinyl chloride, 1,002 g-°K/(mm Hg-m^3) [5.825 lb-°R/(psia-ft^3)]

M_{PVC} = Dry weight of polyvinyl chloride in reactor from recipe, kg (lb)

T_R = Reactor temperature, °C (°F)

K_T = Temperature conversion factor for °C to °K, 273 (°F to °R, 460)

(h)(1) Each piece of equipment within a process unit that can reasonably contain equipment in vinyl chloride service is presumed to be in vinyl chloride service unless an owner or operator demonstrates that the piece of equipment is not in vinyl chloride service. For a piece of equipment to be considered not in vinyl chloride service, it must be determined that the percent vinyl chloride content can be reasonably expected not to exceed 10 percent by weight for liquid streams or contained liquid volumes and 10 percent by volume for gas streams or contained gas volumes, which also includes gas volumes above liquid streams or contained liquid volumes. For purposes of determining the percent vinyl chloride content of the process fluid that is contained in or contacts equipment, procedures that conform to the methods described in ASTM D2267–68, 78, or 88 or D4420–94 (incorporated by reference as specified in § 61.18) shall be used.

(2)(i) An owner or operator may use engineering judgment rather than the procedures in paragraph (h)(1) of this section to demonstrate that the percent vinyl chloride content does not exceed 10 percent by weight for liquid streams and 10 percent by volume for gas streams, provided that the engineering judgment demonstrates that the vinyl chloride content clearly does not exceed 10 percent. When an owner or operator and the Administrator do not agree on whether a piece of equipment is not in vinyl chloride service, however, the procedures in paragraph (h)(1) of this section shall be used to resolve the disagreement.

(ii) If an owner or operator determines that a piece of equipment is in vinyl chloride service, the determination can be revised only after following the procedures in paragraph (h)(1) of this section.

(3) Samples used in determining the percent vinyl chloride content shall be representative of the process fluid that is contained in or contacts the equipment.

[41 FR 46564, Oct. 21, 1976, as amended at 42 FR 29007, June 7, 1977; 47 FR 39486, Sept. 8, 1982; 50 FR 46295, Nov. 7, 1985; 51 FR 34912, Sept. 30, 1986; 65 FR 62152, Oct. 17, 2000]

§ 61.68 Emission monitoring.

(a) A vinyl chloride monitoring system is to be used to monitor on a continuous basis the emissions from the sources for which emission limits are prescribed in §§ 61.62 (a) and (b), 61.63(a), and 61.64 (a)(1), (b), (c), and (d), and for any control system to which reactor emissions are required to be ducted in § 61.64(a)(2) or to which fugitive emissions are required to be ducted in § 61.65 (b)(1)(ii), and (b)(2), (b)(5), (b)(6) (ii), and (b)(9)(ii).

(b) The vinyl chloride monitoring system(s) used to meet the requirement in paragraph (a) of this section is to be a device which obtains representative samples from one or more applicable emission points on a continuous sequential basis and analyzes the samples with gas chromatography or, if the owner or operator assumes that all hydrocarbons measured are vinyl chloride, with infrared spectrophotometry, flame ion detection, or an alternative method. The vinyl chloride monitoring system used to meet the requirements in § 61.65(b)(8)(i) may be used to meet the requirements of this section.

(c) A daily span check is to be conducted for each vinyl chloride monitoring system used. For all of the emission sources listed in paragraph (a) of this section, except the one for which an emission limit is prescribed in § 61.62(b), the daily span check is to be conducted with a concentration of vinyl chloride equal to 10 ppm. For the emission source for which an emission limit is prescribed in § 61.62(b), the daily span check is to be conducted with a concentration of vinyl chloride which is determined to be equivalent to the emission limit for that source based on the emission test required by § 61.67. The calibration is to be done with either:

(1) A calibration gas mixture prepared from the gases specified in Sections 7.2.1 and 7.2.2 of Method 106 and in accordance with Section 10.1 of Method 106, or

(2) A calibration gas cylinder standard containing the appropriate concentration of vinyl chloride. The gas composition of the calibration gas cylinder standard is to have been certified by the manufacturer. The manufacturer must have recommended a maximum shelf life for each cylinder so that the concentration does not change greater than ±5 percent from the certified value. The date of gas cylinder preparation, certified vinyl chloride concentration and recommended maximum shelf life must have been affixed to the cylinder before shipment from the manufacturer to the buyer. If a gas chromatograph is used as the vinyl chloride monitoring system, these gas mixtures may be directly used to prepare a chromatograph calibration curve as described in Sections 8.1 and 9.2 of Method 106. The requirements in Sections 7.2.3.1 and 7.2.3.2 of Method 106 for certification of cylinder standards and for establishment and verification of calibration standards are to be followed.

(d) When exhaust gas(es), having emission limits that are subject to the requirement of paragraph (a) of this section, are emitted to the atmosphere without passing through the control system and required vinyl chloride monitoring system, the vinyl chloride content of the emission shall be calculated (in units of each applicable emission limit) by best practical engineering judgment based on the discharge duration and known VC concentrations in the affected equipment as determined in accordance with §61.67(h) or other acceptable method.

(e) For each 3-hour period, the vinyl chloride content of emissions subject to the requirements of paragraphs (a) and (d) of this section shall be averaged (weighted according to the proportion of time that emissions were continuously monitored and that emissions bypassed the continuous monitor) for purposes of reporting excess emissions under §61.70(c)(1).

(f) For each vinyl chloride emission to the atmosphere determined in accordance with paragraph (e) of this section to be in excess of the applicable emission limits, the owner or operator shall record the identity of the source(s), the date, time, and duration of the excess emission, the cause of the excess emission, and the approximate total vinyl chloride loss during the excess emission, and the method used for determining the vinyl chloride loss. This information shall be retained and made available for inspection by the Administrator as required by §61.71(a).

[41 FR 46564, Oct. 21, 1976; 41 FR 53017, Dec. 3, 1976, as amended at 42 FR 29007, June 7, 1977; 50 FR 46295, Nov. 7, 1985; 51 FR 34913, Sept. 30, 1986; 55 FR 28349, July 10, 1990; 65 FR 62155, Oct. 17, 2000]

§61.69 Initial report.

(a) An owner or operator of any source to which this subpart applies shall submit a statement in writing notifying the Administrator that the equipment and procedural specifications in §61.65 (b)(1), (b)(2), (b)(3), (b)(4), (b)(5), (b)(6), (b)(7), and (b)(8) are being implemented.

(b)(1) In the case of an existing source or a new source which has an initial startup date preceding the effective date, the statement is to be submitted within 90 days of the effective date, unless a waiver of compliance is granted under §61.11, along with the information required under §61.10. If a waiver of compliance is granted, the statement is to be submitted on a date scheduled by the Administrator.

(2) In the case of a new source which did not have an initial startup date preceding the effective date, the statement is to be submitted within 90 days of the initial startup date.

(c) The statement is to contain the following information:

(1) A list of the equipment installed for compliance,

(2) A description of the physical and functional characteristics of each piece of equipment,

(3) A description of the methods which have been incorporated into the standard operating procedures for measuring or calculating the emissions for which emission limits are prescribed in §61.65 (b)(1)(i) and (b)(6)(i),

(4) A statement that each piece of equipment is installed and that each piece of equipment and each procedure is being used.

§ 61.70 Reporting.

(a)(1) The owner or operator of any source to which this subpart applies shall submit to the Administrator on March 15, June 15, September 15, and December 15 of each year a report in writing containing the information required by this section. The first report is to be submitted following the first full 3-month reporting period after the initial report is submitted.

(2) In the case of an existing source, the approved reporting schedule shall be used. In addition, quarterly reports shall be submitted exactly 3 months following the current reporting dates.

(b)(1) In the case of an existing source or a new source which has an initial startup date preceding the effective date, the first report is to be submitted within 180 days of the effective date, unless a waiver of compliance is granted under § 61.11. If a waiver of compliance is granted, the first report is to be submitted on a date scheduled by the Administrator.

(2) In the case of a new source which did not have an initial startup date preceding the effective date, the first report is to be submitted within 180 days of the initial startup date.

(c) Unless otherwise specified, the owner or operator shall use the test methods in appendix B to this part to conduct emission tests as required by paragraphs (c)(2) and (c)(3) of this section, unless an alternative method has been approved by the Administrator. If the Administrator finds reasonable grounds to dispute the results obtained by an alternative method, he may require the use of a reference method. If the results of the reference and alternative methods do not agree, the results obtained by the reference method prevail, and the Administrator may notify the owner or operator that approval of the method previously considered to be alternative is withdrawn.

(1) The owner or operator shall include in the report a record of the vinyl chloride content of emissions for each 3-hour period during which average emissions are in excess of the emission limits in § 61.62(a) or (b), § 61.63(a), or § 61.64(a)(1), (b), (c), or (d), or during which average emissions are in excess of the emission limits specified for any control system to which reactor emissions are required to be ducted in § 61.64(a)(2) or to which fugitive emissions are required to be ducted in § 61.65(b)(I)(ii), (b)(2), (b)(5), (b)(6)(ii), or (b)(9)(ii). The number of 3-hour periods for which average emissions were determined during the reporting period shall be reported. If emissions in excess of the emission limits are not detected, the report shall contain a statement that no excess emissions have been detected. The emissions are to be determined in accordance with § 61.68(e).

(2) In polyvinyl chloride plants for which a stripping operation is used to attain the emission level prescribed in § 61.64(e), the owner or operator shall include in the report a record of the vinyl chloride content in the polyvinyl chloride resin.

(i) If batch stripping is used, one representative sample of polyvinyl chloride resin is to be taken from each batch of each grade of resin immediately following the completion of the stripping operation, and identified by resin type and grade and the date and time the batch is completed. The corresponding quantity of material processed in each stripper batch is to be recorded and identified by resin type and grade and the date and time the batch is completed.

(ii) If continuous stripping is used, one representative sample of polyvinyl chloride resin is to be taken for each grade of resin processed or at intervals of 8 hours for each grade of resin which is being processed, whichever is more frequent. The sample is to be taken as the resin flows out of the stripper and identified by resin type and grade and the date and time the sample was taken. The corresponding quantity of material processed by each stripper over the time period represented by the sample during the 8-hour period, is to be recorded and identified by resin type and grade and the date and time it represents.

(iii) The vinyl chloride content in each sample is to be determined by Method 107 as prescribed in § 61.67(g)(3).

(iv) [Reserved]

(v) The report to the Administrator by the owner or operator is to include a record of any 24-hour average resin vinyl chloride concentration, as determined in this paragraph, in excess of

the limits prescribed in §61.64(e). The vinyl chloride content found in each sample required by paragraphs (c)(2)(i) and (c)(2)(ii) of this section shall be averaged separately for each type of resin, over each calendar day and weighted according to the quantity of each grade of resin processed by the stripper(s) that calendar day, according to the following equation:

$$A_T = \frac{\sum_{i=1}^{n} P_{Gi} M_{Gi}}{Q_T} = \frac{P_{G1}M_{G1} + P_{G2}M_{G2} + \ldots + P_{Gn}M_{Gn}}{Q_T}$$

Where:

A_T = 24-hour average concentration of type T resin in ppm (dry weight basis).

Q_T = Total production of type T resin over the 24-hour period, in kg (ton).

T = Type of resin.

M_{Gi} = Concentration of vinyl chloride in one sample of grade G_i resin in ppm.

P_{Gi} = Production of grade G_i resin represented by the sample, in kg (ton).

G_i = Grade of resin: *e.g.*, G_1, G_2, G_3.

n = Total number of grades of resin produced during the 24-hour period.

The number of 24-hour average concentrations for each resin type determined during the reporting period shall be reported. If no 24-hour average resin vinyl chloride concentrations in excess of the limits prescribed in §61.64(e) are measured, the report shall state that no excess resin vinyl chloride concentrations were measured.

(vi) The owner or operator shall retain at the source and make available for inspection by the Administrator for a minimum of 3 years records of all data needed to furnish the information required by paragraph (c)(2)(v) of this section. The records are to contain the following information:

(A) The vinyl chloride content found in all the samples required in paragraphs (c)(2)(i) and (c)(2)(ii) of this section, identified by the resin type and grade and the time and date of the sample, and

(B) The corresponding quantity of polyvinyl chloride resin processed by the stripper(s), identified by the resin type and grade and the time and date it represents.

(3) The owner or operator shall include in the report a record of any emissions from each reactor opening in excess of the emission limits prescribed in §61.64(a)(2). Emissions are to be determined in accordance with §61.67(g)(5), except that emissions for each reactor are to be determined. The number of reactor openings during the reporting period shall be reported. If emissions in excess of the emission limits are not detected, the report shall include a statement that excess emissions have not been detected.

(4) In polyvinyl chloride plants for which stripping in the reactor is used to attain the emission level prescribed in §61.64(f), the owner or operator shall include in the report a record of the vinyl chloride emissions from reactor opening loss and all sources following the reactor used as a stripper.

(i) One representative sample of polyvinyl chloride resin is to be taken from each batch of each grade of resin immediately following the completion of the stripping operation, and identified by resin type and grade and the date and time the batch is completed. The corresponding quantity of material processed in each stripper batch is to be recorded and identified by resin type and grade and the date and time the batch is completed.

(ii) The vinyl chloride content in each sample is to be determined by Method 107 as prescribed in §61.67(g)(3).

(iii) The combined emissions from reactor opening loss and all sources following the reactor used as a stripper are to be determined for each batch stripped in a reactor according to the procedure prescribed in §61.67(g)(6).

(iv) The report to the Administrator by the owner or operator is to include a record of any 24-hour average combined reactor opening loss and emissions from all sources following the reactor used as a stripper as determined

in this paragraph, in excess of the limits prescribed in § 61.64(f). The combined reactor opening loss and emissions from all sources following the reactor used as a stripper associated with each batch are to be averaged separately for each type of resin, over each calendar day and weighted according to the quantity of each grade of resin stripped in reactors that calendar day as follows:

For each type of resin (suspension, dispersion, latex, bulk, other), the following calculation is to be performed:

$$A_T = \frac{\sum_{i=1}^{n} P_{Gi} C_{Gi}}{Q_T} = \frac{P_{G1}C_{G1} + P_{G2}C_{G2} + \ldots + P_{Gn}C_{Gn}}{Q_T}$$

Where:

A_T = 24-hour average combined reactor opening loss and emissions from all sources following the reactor used as a stripper, in g vinyl chloride/kg (lb/ton) product (dry weight basis).

Q_T = Total production of resin in batches for which stripping is completed during the 24-hour period, in kg (ton).

T = Type of resin.

C_{Gi} = Average combined reactor opening loss and emissions from all sources following the reactor used as a stripper of all batches of grade G_i resin for which stripping is completed during the 24-hour period, in g vinyl chloride/kg (lb/ton) product (dry weight basis) (determined according to procedure prescribed in § 61.67(g)(6)).

P_{Gi} = Production of grade G_i resin in the batches for which C is determined, in kg (ton).

G_i = Grade of resin: e.g., G_1, G_2, G_3.

n = Total number of grades of resin in batches for which stripping is completed during the 24-hour period.

The number of 24-hour average emissions determined during the reporting period shall be reported. If no 24-hour average combined reactor opening loss and emissions from all sources following the reactor used as a stripper in excess of the limits prescribed in § 61.64(f) are determined, the report shall state that no excess vinyl chloride emissions were determined.

[41 FR 46564, Oct. 21, 1976, as amended at 42 FR 29007, June 7, 1977; 50 FR 46295, Nov. 7, 1985; 51 FR 34914, Sept. 30, 1986; 53 FR 36972, Sept. 23, 1988; 53 FR 46976, Nov. 21, 1988; 65 FR 62155, Oct. 17, 2000]

§ 61.71 Recordkeeping.

(a) The owner or operator of any source to which this subpart applies shall retain the following information at the source and make it available for inspection to the Administrator for a minimum of 3 years:

(1) A record of the leaks detected by the vinyl chloride monitoring system, as required by § 61.65(b)(8), including the concentrations of vinyl chloride measured, analyzed, and recorded by the vinyl chloride detector, the location of each measurement and the date and approximate time of each measurement.

(2) A record of the leaks detected during routine monitoring with the portable hydrocarbon detector and the action taken to repair the leaks, as required by § 61.65(b)(8), including a brief statement explaining the location and cause of each leak detected with the portable hydrocarbon detector, the date and time of the leak, and any action taken to eliminate that leak.

(3) A record of emissions measured in accordance with § 61.68.

(4) A daily operating record for each polyvinyl chloride reactor, including pressures and temperatures.

[41 FR 46594, Oct. 21, 1976, as amended at 42 FR 29007, June 7, 1977; 51 FR 34914, Sept. 30, 1986]

Subpart G [Reserved]

Subpart H—National Emission Standards for Emissions of Radionuclides Other Than Radon From Department of Energy Facilities

SOURCE: 54 FR 51695, Dec. 15, 1989, unless otherwise noted.

§61.90 Designation of facilities.

The provisions of this subpart apply to operations at any facility owned or operated by the Department of Energy that emits any radionuclide other than radon-222 and radon-220 into the air, except that this subpart does not apply to disposal at facilities subject to 40 CFR part 191, subpart B or 40 CFR part 192.

§61.91 Definitions.

As used in this subpart, all terms not defined here have the meaning given them in the Clean Air Act or 40 CFR part 61, subpart A. The following terms shall have the following specific meanings:

(a) *Effective dose equivalent* means the sum of the products of absorbed dose and appropriate factors to account for differences in biological effectiveness due to the quality of radiation and its distribution in the body of reference man. The unit of the effective dose equivalent is the rem. For purposes of this subpart, doses caused by radon-222 and its respective decay products formed after the radon is released from the facility are not included. The method for calculating effective dose equivalent and the definition of reference man are outlined in the International Commission on Radiological Protection's Publication No. 26.

(b) *Facility* means all buildings, structures and operations on one contiguous site.

(c) *Radionuclide* means a type of atom which spontaneously undergoes radioactive decay.

(d) *Residence* means any home, house, apartment building, or other place of dwelling which is occupied during any portion of the relevant year.

§61.92 Standard.

Emissions of radionuclides to the ambient air from Department of Energy facilities shall not exceed those amounts that would cause any member of the public to receive in any year an effective dose equivalent of 10 mrem/yr.

§61.93 Emission monitoring and test procedures.

(a) To determine compliance with the standard, radionuclide emissions shall be determined and effective dose equivalent values to members of the public calculated using EPA approved sampling procedures, computer models CAP–88 or AIRDOS–PC, or other procedures for which EPA has granted prior approval. DOE facilities for which the maximally exposed individual lives within 3 kilometers of all sources of emissions in the facility, may use EPA's COMPLY model and associated procedures for determining dose for purposes of compliance.

(b) Radionuclides emission rates from existing point sources (stacks or vents) shall be measured in accordance with the following requirements or with the requirements of paragraph (c) of this section, or other procedures for which EPA has granted prior approval:

(1) Effluent flow rate measurements shall be made using the following methods:

(i) Reference Method 2 of appendix A to part 60 of this chapter shall be used to determine velocity and volumetric flow rates for stacks and large vents.

(ii) Reference Method 2A of appendix A to part 60 of this chapter shall be used to measure flow rates through pipes and small vents.

(iii) The frequency of the flow rate measurements shall depend upon the variability of the effluent flow rate. For variable flow rates, continuous or frequent flow rate measurements shall be made. For relatively constant flow rates only periodic measurements are necessary.

(2) Radionuclides shall be directly monitored or extracted, collected and measured using the following methods:

(i) Reference Method 1 of appendix A to part 60 of this chapter shall be used to select monitoring or sampling sites.

(ii) The effluent stream shall be directly monitored continuously with an in-line detector or representative samples of the effluent stream shall be withdrawn continuously from the sampling site following the guidance presented in ANSIN13.1–1969 ''Guide to Sampling Airborne Radioactive Materials in Nuclear Facilities'' (including the guidance presented in appendix A of ANSIN13.1) (incorporated by reference—see §61.18). The requirements for continuous sampling are applicable to batch processes when the unit is in operation. Periodic sampling

(grab samples) may be used only with EPA's prior approval. Such approval may be granted in cases where continuous sampling is not practical and radionuclide emission rates are relatively constant. In such cases, grab samples shall be collected with sufficient frequency so as to provide a representative sample of the emissions.

(iii) Radionuclides shall be collected and measured using procedures based on the principles of measurement described in appendix B, Method 114. Use of methods based on principles of measurement different from those described in appendix B, Method 114 must have prior approval from the Administrator. EPA reserves the right to approve measurement procedures.

(iv) A quality assurance program shall be conducted that meets the performance requirements described in appendix B, Method 114.

(3) When it is impractical to measure the effluent flow rate at an existing source in accordance with the requirements of paragraph (b)(1) of this section or to monitor or sample an effluent stream at an existing source in accordance with the site selection and sample extraction requirements of paragraph (b)(2) of this section, the facility owner or operator may use alternative effluent flow rate measurement procedures or site selection and sample extraction procedures provided that:

(i) It can be shown that the requirements of paragraph (b) (1) or (2) of this section are impractical for the effluent stream.

(ii) The alternative procedure will not significantly underestimate the emissions.

(iii) The alternative procedure is fully documented.

(iv) The owner or operator has received prior approval from EPA.

(4)(i) Radionuclide emission measurements in conformance with the requirements of paragraph (b) of this section shall be made at all release points which have a potential to discharge radionuclides into the air in quantities which could cause an effective dose equivalent in excess of 1% of the standard. All radionuclides which could contribute greater than 10% of the potential effective dose equivalent for a release point shall be measured. With prior EPA approval, DOE may determine these emissions through alternative procedures. For other release points which have a potential to release radionuclides into the air, periodic confirmatory measurements shall be made to verify the low emissions.

(ii) To determine whether a release point is subject to the emission measurement requirements of paragraph (b) of this section, it is necessary to evaluate the potential for radionuclide emissions for that release point. In evaluating the potential of a release point to discharge radionuclides into the air for the purposes of this section, the estimated radionuclide release rates shall be based on the discharge of the effluent stream that would result if all pollution control equipment did not exist, but the facilities operations were otherwise normal.

(5) Environmental measurements of radionuclide air concentrations at critical receptor locations may be used as an alternative to air dispersion calculations in demonstrating compliance with the standard if the owner or operator meets the following criteria:

(i) The air at the point of measurement shall be continuously sampled for collection of radionuclides.

(ii) Those radionuclides released from the facility, which are the major contributors to the effective dose equivalent must be collected and measured as part of the environmental measurement program.

(iii) Radionuclide concentrations which would cause an effective dose equivalent of 10% of the standard shall be readily detectable and distinguishable from background.

(iv) Net measured radionuclide concentrations shall be compared to the concentration levels in Table 2 of appendix E to determine compliance with the standard. In the case of multiple radionuclides being released from a facility, compliance shall be demonstrated if the value for all radionuclides is less than the concentration level in Table 2, and the sum of the fractions that result when each measured concentration value is divided by the value in Table 2 for each radionuclide is less than 1.

(v) A quality assurance program shall be conducted that meets the performance requirements described in appendix B, Method 114.

(vi) Use of environmental measurements to demonstrate compliance with the standard is subject to prior approval of EPA. Applications for approval shall include a detailed description of the sampling and analytical methodology and show how the above criteria will be met.

(c) Radionuclide emission rates from new point sources (stacks or vents) as defined in subpart A shall be measured in accordance with the following requirements, or other procedures for which EPA has granted prior approval:

(1) Effluent flow rate measurements shall be made using the following methods:

(i) ANSI/HPS N13.1–1999 ''Sampling and Monitoring Releases of Airborne Radioactive Substances from the Stacks and Ducts of Nuclear Facilities' (incorporated by reference—see §61.18) shall be used to determine velocity and volumetric flow rates for stacks and large vents.

(ii) ANSI/HPS N13.1–1999 shall be used to measure flow rates through pipes and small vents.

(iii) The frequency of the flow rate measurements shall depend upon variability of the effluent flow rate. For variable flow rates, continuous or frequent flow rate measurements shall be made. For relatively constant flow rates only periodic measurements are necessary.

(2) Radionuclide shall be directly monitored or extracted, collected and measured using the following methods:

(i) ANSI/HPS N13.1–1999 shall be used to select monitoring or sampling sites.

(ii) The effluent stream shall be directly monitored continuously with an in-line detector or representative samples of the effluent stream shall be withdrawn continuously from the sampling site following the guidance presented in ANSI/HPS N13.1–1999. The requirements for continuous sampling are applicable to batch processes when the unit is in operation. Periodic sampling (grab samples) may be used only with EPA's prior approval. Such approval may be granted in cases where continuous sampling is not practical and radionuclide emission rates are relatively constant. In such cases, grab samples shall be collected with sufficient frequency so as to provide a representative sample of the emissions.

(iii) Radionuclides shall be collected and measured using procedures based on the principles of measurement described in appendix B, Method 114 of this part. Use of methods based on principles of measurement different from those described in appendix B, Method 114 of this part must have prior approval from the Administrator. EPA reserves the right to approve measurement procedures.

(iv) A quality assurance program shall be conducted that meets the performance requirements described in ANSI/HPS N13.1–1999.

(d) When it is impractical to measure the effluent flow rate at a source in accordance with the requirements of paragraph (b)(1) or (c) of this section or to monitor or sample an effluent stream at a source in accordance with the site selection and sample extraction requirements of paragraph (b)(2) or (c) of this section, the facility owner or operator may use alternative effluent flow rate measurement procedures or site selection and sample extraction procedures provided that:

(1) It can be shown that the requirements of paragraph (b)(1) or (2) or (c) of this section are impractical for the effluent stream.

(2) The alternative procedure will not significantly underestimate the emissions.

(3) The alternative procedure is fully documented.

(4) The owner or operator has received prior approval from EPA.

(e) Radionuclide emission measurements in conformance with the requirements of paragraph (b) or (c) of this section shall be made at all release points that have a potential to discharge radionuclides into the air in quantities that could cause an effective dose equivalent in excess of 1% of the standard. All radionuclides that could contribute greater than 10% of the potential effective dose equivalent for a release point shall be measured. With prior EPA approval, DOE may determine these emissions through alternative procedures. For other release

points that have a potential to release radionuclides into the air, periodic confirmatory measurements shall be made to verify the low emissions.

(f) To determine whether a release point is subject to the emission measurement requirements of paragraph (b) or (c) of this section, it is necessary to evaluate the potential for radionuclide emissions for that release point. In evaluating the potential of a release point to discharge radionuclides into the air for the purposes of this section, the estimated radionuclide release rates shall be based on the discharge of the effluent stream that would result if all pollution control equipment did not exist, but the facilities operations were otherwise normal.

(g) Environmental measurements of radionuclide air concentrations at critical receptor locations may be used as an alternative to air dispersion calculations in demonstrating compliance with the standard if the owner or operator meets the following criteria:

(1) The air at the point of measurement shall be continuously sampled for collection of radionuclides.

(2) Those radionuclides released from the facility that are the major contributors to the effective dose equivalent must be collected and measured as part of the environmental measurement program.

(3) Radionuclide concentrations that would cause an effective dose equivalent of 10% of the standard shall be readily detectable and distinguishable from background.

(4) Net measured radionuclide concentrations shall be compared to the concentration levels in Table 2 appendix E of this part to determine compliance with the standard. In the case of multiple radionuclides being released from a facility, compliance shall be demonstrated if the value for all radionuclides is less than the concentration level in Table 2 of appendix E of this part, and the sum of the fractions that result when each measured concentration value is divided by the value in Table 2 of appendix E of this part for each radionuclide is less than 1.

(5) A quality assurance program shall be conducted that meets the performance requirements described in appendix B, Method 114 of this part.

(6) Use of environmental measurements to demonstrate compliance with the standard is subject to prior approval of EPA. Applications for approval shall include a detailed description of the sampling and analytical methodology and show how the above criteria will be met.

[54 FR 51695, Dec. 15, 1989, as amended at 65 FR 62156, Oct. 17, 2000; 67 FR 57166, Sept. 9, 2002]

§ 61.94 Compliance and reporting.

(a) Compliance with this standard shall be determined by calculating the highest effective dose equivalent to any member of the public at any offsite point where there is a residence, school, business or office. The owners or operators of each facility shall submit an annual report to both EPA headquarters and the appropriate regional office by June 30 which includes the results of the monitoring as recorded in DOE's Effluent Information System and the dose calculations required by § 61.93(a) for the previous calendar year.

(b) In addition to the requirements of paragraph (a) of this section, an annual report shall include the following information:

(1) The name and location of the facility.

(2) A list of the radioactive materials used at the facility.

(3) A description of the handling and processing that the radioactive materials undergo at the facility.

(4) A list of the stacks or vents or other points where radioactive materials are released to the atmosphere.

(5) A description of the effluent controls that are used on each stack, vent, or other release point and an estimate of the efficiency of each control device.

(6) Distances from the points of release to the nearest residence, school, business or office and the nearest farms producing vegetables, milk, and meat.

(7) The values used for all other user-supplied input parameters for the computer models (e.g., meteorological data) and the source of these data.

(8) A brief description of all construction and modifications which were completed in the calendar year for which the report is prepared, but for

which the requirement to apply for approval to construct or modify was waived under §61.96 and associated documentation developed by DOE to support the waiver. EPA reserves the right to require that DOE send to EPA all the information that normally would be required in an application to construct or modify, following receipt of the description and supporting documentation.

(9) Each report shall be signed and dated by a corporate officer or public official in charge of the facility and contain the following declaration immediately above the signature line: ''I certify under penalty of law that I have personally examined and am familiar with the information submitted herein and based on my inquiry of those individuals immediately responsible for obtaining the information, I believe that the submitted information is true, accurate and complete. I am aware that there are significant penalties for submitting false information including the possibility of fine and imprisonment. See, 18 U.S.C. 1001.''

(c) If the facility is not in compliance with the emission limits of §61.92 in the calendar year covered by the report, then the facility must commence reporting to the Administrator on a monthly basis the information listed in paragraph (b) of this section, for the preceding month. These reports will start the month immediately following the submittal of the annual report for the year in noncompliance and will be due 30 days following the end of each month. This increased level of reporting will continue until the Administrator has determined that the monthly reports are no longer necessary. In addition to all the information required in paragraph (b) of this section, monthly reports shall also include the following information:

(1) All controls or other changes in operation of the facility that will be or are being installed to bring the facility into compliance.

(2) If the facility is under a judicial or administrative enforcement decree, the report will describe the facilities performance under the terms of the decree.

(d) In those instances where the information requested is classified, such information will be made available to EPA separate from the report and will be handled and controlled according to applicable security and classification regulations and requirements.

§61.95 Recordkeeping requirements.

All facilities must maintain records documenting the source of input parameters including the results of all measurements upon which they are based, the calculations and/or analytical methods used to derive values for input parameters, and the procedure used to determine effective dose equivalent. This documentation should be sufficient to allow an independent auditor to verify the accuracy of the determination made concerning the facility's compliance with the standard. These records must be kept at the site of the facility for at least five years and, upon request, be made available for inspection by the Administrator, or his authorized representative.

§61.96 Applications to construct or modify.

(a) In addition to any activity that is defined as construction under 40 CFR part 61, subpart A, any fabrication, erection or installation of a new building or structure within a facility that emits radionuclides is also defined as new construction for purposes of 40 CFR part 61, subpart A.

(b) An application for approval under §61.07 or notification of startup under §61.09 does not need to be filed for any new construction of or modification within an existing facility if the effective dose equivalent, caused by all emissions from the new construction or modification, is less than 1% of the standard prescribed in §61.92. For purposes of this paragraph the effective dose equivalent shall be calculated using the source term derived using appendix D as input to the dispersion and other computer models described in §61.93. DOE may, with prior approval from EPA, use another procedure for estimating the source term for use in this paragraph. A facility is eligible for this exemption only if, based on its last annual report, the facility is in compliance with this subpart.

(c) Conditions to approvals granted under § 61.08 will not contain requirements for post approval reporting on operating conditions beyond those specified in § 61.94.

§ 61.97 Exemption from the reporting and testing requirements of 40 CFR 61.10.

All facilities designated under this subpart are exempt from the reporting requirements of 40 CFR 61.10.

Subpart I—National Emission Standards for Radionuclide Emissions From Federal Facilities Other Than Nuclear Regulatory Commission Licensees and Not Covered by Subpart H

SOURCE: 54 FR 51697, Dec. 15, 1989, unless otherwise noted.

§ 61.100 Applicability.

The provisions of this subpart apply to facilities owned or operated by any Federal agency other than the Department of Energy and not licensed by the Nuclear Regulatory Commission, except that this subpart does not apply to disposal at facilities regulated under 40 CFR part 191, subpart B, or to any uranium mill tailings pile after it has been disposed of under 40 CFR part 192, or to low energy accelerators.

[61 FR 68981, Dec. 30, 1996]

§ 61.101 Definitions.

As used in this subpart, all terms not defined here have the meaning given them in the Clean Air Act or subpart A of part 61. The following terms shall have the following specific meanings:

(a) *Effective dose equivalent* means the sum of the products of absorbed dose and appropriate factors to account for differences in biological effectiveness due to the quality of radiation and its distribution in the body of reference man. The unit of the effective dose equivalent is the rem. For purposes of this subpart doses caused by radon-222 and its decay products formed after the radon is released from the facility are not included. The method for calculating effective dose equivalent and the definition of reference man are outlined in the International Commission on Radiological Protection's Publication No. 26.

(b) *Facility* means all buildings, structures and operations on one contiguous site.

(c) *Federal facility* means any facility owned or operated by any department, commission, agency, office, bureau or other unit of the government of the United States of America except for facilities owned or operated by the Department of Energy.

(d) *Radionuclide* means a type of atom which spontaneously undergoes radioactive decay.

[54 FR 51697, Dec. 15, 1989, as amended at 61 FR 68981, Dec. 30, 1996]

§ 61.102 Standard.

(a) Emissions of radionuclides, including iodine, to the ambient air from a facility regulated under this subpart shall not exceed those amounts that would cause any member of the public to receive in any year an effective dose equivalent of 10 mrem/yr.

(b) Emissions of iodine to the ambient air from a facility regulated under this subpart shall not exceed those amounts that would cause any member of the public to receive in any year an effective dose equivalent of 3 mrem/yr.

§ 61.103 Determining compliance.

(a) Compliance with the emission standard in this subpart shall be determined through the use of either the EPA computer code COMPLY or the alternative requirements of appendix E. Facilities emitting radionuclides not listed in COMPLY or appendix E shall contact EPA to receive the information needed to determine dose. The source terms to be used for input into COMPLY shall be determined through the use of the measurement procedures listed in § 61.107 or the emission factors in appendix D or through alternative procedures for which EPA has granted prior approval; or,

(b) Facilities may demonstrate compliance with the emission standard in this subpart through the use of computer models that are equivalent to COMPLY, provided that the model has received prior approval from EPA headquarters. Any facility using a model other than COMPLY must file

an annual report. EPA may approve an alternative model in whole or in part and may limit its use to specific circumstances.

§61.104 Reporting requirements.

(a) The owner or operator of a facility subject to this subpart must submit an annual report to the EPA covering the emissions of a calendar year by March 31 of the following year.

(1) The report or application for approval to construct or modify as required by 40 CFR part 61, subpart A and §61.106, must provide the following information:

(i) The name of the facility.

(ii) The name of the person responsible for the operation of the facility and the name of the person preparing the report (if different).

(iii) The location of the facility, including suite and/or building number, street, city, county, state, and zip code.

(iv) The mailing address of the facility, if different from item (iii).

(v) A list of the radioactive materials used at the facility.

(vi) A description of the handling and processing that the radioactive materials undergo at the facility.

(vii) A list of the stacks or vents or other points where radioactive materials are released to the atmosphere.

(viii) A description of the effluent controls that are used on each stack, vent, or other release point and an estimate of the efficiency of each device.

(ix) Distances from the point of release to the nearest residence, school, business or office and the nearest farms producing vegetables, milk, and meat.

(x) The effective dose equivalent calculated using the compliance procedures in §61.103.

(xi) The physical form and quantity of each radionuclide emitted from each stack, vent or other release point, and the method(s) by which these quantities were determined.

(xii) The volumetric flow, diameter, effluent temperature, and release height for each stack, vent or other release point where radioactive materials are emitted, the method(s) by which these were determined.

(xiii) The height and width of each building from which radionuclides are emitted.

(xiv) The values used for all other user-supplied input parameters (e.g., meteorological data) and the source of these data.

(xv) A brief description of all construction and modifications which were completed in the calendar year for which the report is prepared, but for which the requirement to apply for approval to construct or modify was waived under §61.106, and associated documentation developed by the licensee to support the waiver. EPA reserves the right to require that the licensee send to EPA all the information that normally would be required in an application to construct or modify, following receipt of the description and supporting documentation.

(xvi) Each report shall be signed and dated by a corporate officer or public official in charge of the facility and contain the following declaration immediately above the signature line: ''I certify under penalty of law that I have personally examined and am familiar with the information submitted herein and based on my inquiry of those individuals immediately responsible for obtaining the information, I believe that the submitted information is true, accurate and complete. I am aware that there are significant penalties for submitting false information including the possibility of fine and imprisonment. See, 18 U.S.C. 1001.''

(b) Facilities emitting radionuclides in an amount that would cause less than 10% of the dose standard in §61.102, as determined by the compliance procedures from §61.103(a), are exempt from the reporting requirements of §61.104(a). Facilities shall annually make a new determination whether they are exempt from reporting.

(c) If the facility is not in compliance with the emission limits of §61.102 in the calendar year covered by the report, the facility must report to the Administrator on a monthly basis the information listed in paragraph (a) of this section, for the preceding month. These reports will start the month immediately following the submittal of

the annual report for the year in noncompliance and will be due 30 days following the end of each month. This increased level of reporting will continue until the Administrator has determined that the monthly reports are no longer necessary. In addition to all the information required in paragraph (a) of this section, monthly reports shall also include the following information:

(1) All controls or other changes in operation of the facility that will be or are being installed to bring the facility into compliance.

(2) If the facility is under a judicial or administrative enforcement decree the report will describe the facilities performance under the terms of the decree.

(d) The first report will cover the emissions of calendar year 1990.

§ 61.105 Recordkeeping requirements.

The owner or operator of any facility must maintain records documenting the source of input parameters including the results of all measurements upon which they are based, the calculations and/or analytical methods used to derive values for input parameters, and the procedure used to determine compliance. This documentation should be sufficient to allow an independent auditor to verify the accuracy of the determination made concerning the facility's compliance with the standard, and, if claimed, qualification for exemption from reporting. These records must be kept at the site of the facility for at least five years and upon request be made available for inspection by the Administrator, or his authorized representative.

§ 61.106 Applications to construct or modify.

(a) In addition to any activity that is defined as construction under 40 CFR part 61, subpart A, any fabrication, erection or installation of a new building or structure within a facility is also defined as new construction for purposes of 40 CFR part 61, subpart A.

(b) An application under § 61.07 does not need to be filed for any new construction of or modification within an existing facility if one of the following conditions is met:

(1) The effective dose equivalent calculated by using methods described in § 61.103, that is caused by all emissions from the facility including those potentially emitted by the proposed new construction or modification, is less than 10% of the standard prescribed in § 61.102.

(2) The effective dose equivalent calculated by using methods described in § 61.103, that is caused by all emissions from the new construction or modification, is less than 1% of the limit prescribed in § 61.102. A facility is eligible for this exemption only if the facility, based on its last annual report, is in compliance with this subpart.

§ 61.107 Emission determination.

(a) Facility owners or operators may, in lieu of monitoring, estimate radionuclide emissions in accordance with appendix D, or other procedure for which EPA has granted prior approval.

(b) Radionuclide emission rates from existing point sources (stacks or vents) shall be measured in accordance with the following requirements or within the requirements of paragraph (d) of this section, or other procedures for which EPA has granted prior approval:

(1) Effluent flow rate measurements shall be made using the following methods:

(i) Reference Method 2 of appendix A to part 60 of this chapter shall be used to determine velocity and volumetric flow rates for stacks and large vents.

(ii) Reference Method 2A of appendix A to part 60 of this chapter shall be used to measure flow rates through pipes and small vents.

(iii) The frequency of the flow rate measurements shall depend upon the variability of the effluent flow rate. For variable flow rates, continuous or frequent flow rate measurements shall be made. For relatively constant flow rates only periodic measurements are necessary.

(2) Radionuclides shall be directly monitored or extracted, collected, and measured using the following methods:

(i) Reference Method 1 of appendix A part 60 of this chapter shall be used to select monitoring or sampling sites.

(ii) The effluent stream shall be directly monitored continuously using an in-line detector or representative

samples of the effluent stream shall be withdrawn continuously from the sampling site following the guidance presented in ANSIN13.1–1969 ''Guide to Sampling Airborne Radioactive Materials in Nuclear Facilities'' (including the guidance presented in appendix A of ANSIN13.1) (incorporated by reference—see §61.18). The requirements for continuous sampling are applicable to batch processes when the unit is in operation. Periodic sampling (grab samples) may be used only with EPA's prior approval. Such approval may be granted in cases where continuous sampling is not practical and radionuclide emission rates are relatively constant. In such cases, grab samples shall be collected with sufficient frequency so as to provide a representative sample of the emissions.

(iii) Radionuclides shall be collected and measured using procedures based on the principles of measurement described in appendix B, Method 114. Use of methods based on principles of measurement different from those described in appendix B, Method 114 must have prior approval from the Administrator. EPA reserves the right to approve alternative measurement procedures in whole or in part.

(iv) A quality assurance program shall be conducted that meets the performance requirements described in appendix B, Method 114.

(3) When it is impractical to measure the effluent flow rate at an existing source in accordance with the requirements of paragraph (b)(1) of this section or to monitor or sample an effluent stream at an existing source in accordance with the site selection and sample extraction requirements of paragraph (b)(2) of this section, the facility owner or operator may use alternative effluent flow rate measurement procedures or site selection and sample extraction procedures provided that:

(i) It can be shown that the requirements of paragraphs (b) (1) and (2) of this section are impractical for the effluent stream.

(ii) The alternative procedure will not significantly underestimate the emissions.

(iii) The alternative procedure is fully documented.

(iv) The owner or operator has received prior approval from EPA.

(4)(i) Radionuclide emission measurements in conformance with the requirements of paragraph (b) of this section shall be made at all release points which have a potential to discharge radionuclides into the air in quantities which could cause an effective dose equivalent in excess of 1% of the standard. All radionuclides which could contribute greater than 10% of the potential effective dose equivalent for a release point shall be measured. For other release points which have a potential to release radionuclides into the air, periodic confirmatory measurements should be made to verify the low emissions.

(ii) To determine whether a release point is subject to the emission measurement requirements of paragraph (b) of this section, it is necessary to evaluate the potential for radionuclide emissions for that release point. In evaluating the potential of a release point to discharge radionuclides into the air, the estimated radionuclide release rates shall be based on the discharge of the uncontrolled effluent stream into the air.

(5) Environmental measurements of radionuclide air concentrations at critical receptor locations may be used as an alternative to air dispersion calculations in demonstrating compliance with the standards if the owner or operator meets the following criteria:

(i) The air at the point of measurement shall be continuously sampled for collection of radionuclides.

(ii) Those radionuclides released from the facility, which are the major contributors to the effective dose equivalent must be collected and measured as part of the environmental measurements program.

(iii) Radionuclide concentrations which would cause an effective dose equivalent greater than or equal to 10% of the standard shall be readily detectable and distinguishable from background.

(iv) Net measured radionuclide concentrations shall be compared to the concentration levels in Table 2 of appendix E to determine compliance with the standard. In the case of multiple

radionuclides being released from a facility, compliance shall be demonstrated if the value for all radionuclides is less than the concentration level in Table 2 and the sum of the fractions that result when each measured concentration value is divided by the value in Table 2 for each radionuclide is less than 1.

(v) A quality assurance program shall be conducted that meets the performance requirements described in appendix B, Method 114.

(vi) Use of environmental measurements to demonstrate compliance with the standard is subject to prior approval of EPA. Applications for approval shall include a detailed description of the sampling and analytical methodology and show how the above criteria will be met.

(c) The following facilities may use either the methodologies and quality assurance programs described in paragraph (b) of this section or may use the following:

(1) [Reserved]

(2) Uranium mills may determine their emissions in conformance with the Nuclear Regulatory Commission's Regulatory Guide 4.14 dated April 1980. In addition, they may conduct a quality assurance program as described in the Nuclear Regulatory Commission's Regulatory Guide 4.15 dated February 1979.

(d) Radionuclide emission rates from new point sources (stacks or vents) as defined in subpart A shall be measured in accordance with the following requirements, or other procedures for which EPA has granted prior approval:

(1) Effluent flow rate measurements shall be made using the following methods:

(i) ANSI/HPS N13.1–1999 ''Sampling and Monitoring Releases of Airborne Radioactive Substances from the Stacks and Ducts of Nuclear Facilities'' (incorporated by reference—see § 61.18) shall be used to determine velocity and volumetric flow rates for stacks and large vents.

(ii) ANSI/HPS N13.1–1999 shall be used to measure flow rates through pipes and small vents.

(iii) The frequency of the flow rate measurements shall depend upon variability of the effluent flow rate. For variable flow rates, continuous or frequent flow rate measurements shall be made. For relatively constant flow rates only periodic measurements are necessary.

(2) Radionuclide shall be directly monitored or extracted, collected and measured using the following methods:

(i) ANSI/HPS N13.1–1999 shall be used to select monitoring or sampling sites.

(ii) The effluent stream shall be directly monitored continuously with an in-line detector or representative samples of the effluent stream shall be withdrawn continuously from the sampling site following the guidance presented in ANSI/HPS N13.1–1999. The requirements for continuous sampling are applicable to batch processes when the unit is in operation. Periodic sampling (grab samples) may be used only with EPA's prior approval. Such approval may be granted in cases where continuous sampling is not practical and radionuclide emission rates are relatively constant. In such cases, grab samples shall be collected with sufficient frequency so as to provide a representative sample of the emissions.

(iii) Radionuclides shall be collected and measured using procedures based on the principles of measurement described in appendix B, Method 114 of this part. Use of methods based on principles of measurement different from those described in appendix B, Method 114 of this part must have prior approval from the Administrator. EPA reserves the right to approve measurement procedures.

(iv) A quality assurance program shall be conducted that meets the performance requirements described in ANSI/HPS N13.1–1999.

(e) When it is impractical to measure the effluent flow rate at a source in accordance with the requirements of paragraph (b)(1) or (d) of this section or to monitor or sample an effluent stream at a source in accordance with the site selection and sample extraction requirements of paragraph (b)(2) or (d) of this section, the facility owner or operator may use alternative effluent flow rate measurement procedures or site selection and sample extraction procedures provided that:

(1) It can be shown that the requirements of paragraph (b)(1) or (2) or (d) of

this section are impractical for the effluent stream.

(2) The alternative procedure will not significantly underestimate the emissions.

(3) The alternative procedure is fully documented.

(4) The owner or operator has received prior approval from EPA.

(f) Radionuclide emission measurements in conformance with the requirements of paragraph (b) or (d) of this section shall be made at all release points that have a potential to discharge radionuclides into the air in quantities that could cause an effective dose equivalent in excess of 1% of the standard. All radionuclides that could contribute greater than 10% of the potential effective dose equivalent for a release point shall be measured. With prior EPA approval, DOE may determine these emissions through alternative procedures. For other release points that have a potential to release radionuclides into the air, periodic confirmatory measurements shall be made to verify the low emissions.

(g) To determine whether a release point is subject to the emission measurement requirements of paragraph (b) or (d) of this section, it is necessary to evaluate the potential for radionuclide emissions for that release point. In evaluating the potential of a release point to discharge radionuclides into the air for the purposes of this section, the estimated radionuclide release rates shall be based on the discharge of the effluent stream that would result if all pollution control equipment did not exist, but the facilities operations were otherwise normal.

(h) Environmental measurements of radionuclide air concentrations at critical receptor locations may be used as an alternative to air dispersion calculations in demonstrating compliance with the standard if the owner or operator meets the following criteria:

(1) The air at the point of measurement shall be continuously sampled for collection of radionuclides.

(2) Those radionuclides released from the facility that are the major contributors to the effective dose equivalent must be collected and measured as part of the environmental measurement program.

(3) Radionuclide concentrations that would cause an effective dose equivalent of 10% of the standard shall be readily detectable and distinguishable from background.

(4) Net measured radionuclide concentrations shall be compared to the concentration levels in Table 2 of appendix E of this part to determine compliance with the standard. In the case of multiple radionuclides being released from a facility, compliance shall be demonstrated if the value for all radionuclides is less than the concentration level in Table 2 of appendix E of this part, and the sum of the fractions that result when each measured concentration value is divided by the value in Table 2 of appendix E of this part for each radionuclide is less than 1.

(5) A quality assurance program shall be conducted that meets the performance requirements described in appendix B, Method 114 of this part.

(6) Use of environmental measurements to demonstrate compliance with the standard is subject to prior approval of EPA. Applications for approval shall include a detailed description of the sampling and analytical methodology and show how the above criteria will be met.

[54 FR 51697, Dec. 15, 1989, as amended at 61 FR 46212, Sept. 5, 1995; 61 FR 68981, Dec. 30, 1996; 65 FR 62156, Oct. 17, 2000; 67 FR 57167, Sept. 9, 2002]

§61.108 Exemption from the reporting and testing requirements of 40 CFR 61.10.

All facilities designated under this subpart are exempt from the reporting requirements of 40 CFR 61.10.

Subpart J—National Emission Standard for Equipment Leaks (Fugitive Emission Sources) of Benzene

SOURCE: 49 FR 23513, June 6, 1984, unless otherwise noted.

§61.110 Applicability and designation of sources.

(a) The provisions of this subpart apply to each of the following sources that are intended to operate in benzene service: pumps, compressors, pressure

relief devices, sampling connection systems, open-ended valves or lines, valves, connectors, surge control vessels, bottoms receivers, and control devices or systems required by this subpart.

(b) The provisions of this subpart do not apply to sources located in coke by-product plants.

(c)(1) If an owner or operator applies for one of the exemptions in this paragraph, then the owner or operator shall maintain records as required in § 61.246(i).

(2) Any equipment in benzene service that is located at a plant site designed to produce or use less than 1,000 megagrams (1,102 tons) of benzene per year is exempt from the requirements of § 61.112.

(3) Any process unit (defined in § 61.241) that has no equipment in benzene service is exempt from the requirements of § 61.112.

(d) While the provisions of this subpart are effective, a source to which this subpart applies that is also subject to the provisions of 40 CFR part 60 only will be required to comply with the provisions of this subpart.

[49 FR 23513, June 6, 1984, as amended at 65 FR 62156, Oct. 17, 2000; 65 FR 78280, Dec. 14, 2000]

§ 61.111 Definitions.

As used in this subpart, all terms not defined herein shall have the meaning given them in the Act, in subpart A of part 61, or in subpart V of part 61, and the following terms shall have the specific meanings given them:

In benzene service means that a piece of equipment either contains or contacts a fluid (Liquid or gas) that is at least 10 percent benzene by weight as determined according to the provisions of § 61.245(d). The provisions of § 61.245(d) also specify how to determine that a piece of equipment is not in benzene service.

Semiannual means a 6-month period; the first semiannual period concludes on the last day of the last month during the 180 days following initial start-up for new sources; and the first semiannual period concludes on the last day of the last full month during the 180 days after June 6, 1984 for existing sources.

§ 61.112 Standards.

(a) Each owner or operator subject to the provisions of this subpart shall comply with the requirements of subpart V of this part.

(b) An owner or operator may elect to comply with the requirements of §§ 61.243–1 and 61.243–2.

(c) An owner or operator may apply to the Administrator for a determination of an alternative means of emission limitation that achieves a reduction in emissions of benzene at least equivalent to the reduction in emissions of benzene achieved by the controls required in this subpart. In doing so, the owner or operator shall comply with requirements of § 61.244.

Subpart K—National Emission Standards for Radionuclide Emissions From Elemental Phosphorus Plants

SOURCE: 54 FR 51699, Dec. 15, 1989, unless otherwise noted.

§ 61.120 Applicability.

The provisions of this subpart are applicable to owners or operators of calciners and nodulizing kilns at elemental phosphorus plants.

§61.121 Definitions.

(a) *Elemental phosphorus plant* or *plant* means any facility that processes phosphate rock to produce elemental phosphorus. A plant includes all buildings, structures, operations, calciners and nodulizing kilns on one contiguous site.

(b) *Calciner* or *Nodulizing kiln* means a unit in which phosphate rock is heated to high temperatures to remove organic material and/or to convert it to a nodular form. For the purpose of this subpart, calciners and nodulizing kilns are considered to be similar units.

§ 61.122 Emission standard.

Emissions of polonium-210 to the ambient air from all calciners and nodulizing kilns at an elemental phosphorus plant shall not exceed a total of 2 curies a year; except that compliance with this standard may be conclusively shown if the elemental phosphorus plant:

(a) Installs a Hydro-Sonic® Tandem Nozzle Fixed Throat Free-Jet Scrubber System including four scrubber units,

(b) All four scrubber units are operated continuously with a minimum average over any 6-hour period of 40 inches (water column) of pressure drop across each scrubber during calcining of phosphate shale,

(c) The system is used to scrub emissions from all calciners and/or nodulizing kilns at the plant, and

(d) Total emissions of polonium-210 from the plant do not exceed 4.5 curies per year.

Alternative operating conditions, which can be shown to achieve an overall removal efficiency for emissions of polonium-210 which is equal to or greater than the efficiency which would be achieved under the operating conditions described in paragraphs (a), (b), and (c) of this section, may be used with prior approval of the Administrator. A facility shall apply for such approval in writing, and the Administrator shall act upon the request within 30 days after receipt of a complete and technically sufficient application.

[56 FR 65943, Dec. 19, 1991]

§61.123 Emission testing.

(a) Each owner or operator of an elemental phosphorus plant shall test emissions from the plant within 90 days of the effective date of this standard and annually thereafter. The Administrator may temporarily or permanently waive the annual testing requirement or increase the frequency of testing, if the Administrator determines that more testing is required.

(b) The Administrator shall be notified at least 30 days prior to an emission test so that EPA may, at its option, observe the test.

(c) An emission test shall be conducted at each operational calciner or nodulizing kiln. If emissions from a calciner or nodulizing kiln are discharged through more than one stack, then an emission test shall be conducted at each stack and the total emission rate from the calciner or kiln shall be the sum of the emission rates from each of the stacks.

(d) Each emission test shall consist of three sampling runs that meet the requirements of §61.125. The phosphate rock processing rate during each run shall be recorded. An emission rate in curies per Mg or curies per ton of phosphate rock processed shall be calculated for each run. The average of all three runs shall apply in computing the emission rate for the test. The annual polonium-210 emission rate from a calciner or nodulizing kiln shall be determined by multiplying the measured polonium-210 emission rate in curies per Mg or curies per ton of phosphate rock processed by the annual phosphate rock processing rate in Mg (tons). In determining the annual phosphate rock processing rate, the values used for operating hours and operating capacity shall be values that will maximize the expected processing rate. For determining compliance with the emission standard of §61.122, the total annual emission rate is the sum of the annual emission rates for all operating calciners and nodulizing kilns.

(e) If the owner or operator changes his operation in such a way as to increase his emissions of polonium-210, such as changing the type of rock processed, the temperature of the calciners or kilns, or increasing the annual phosphate rock processing rate, then a new emission test, meeting the requirements of this section, shall be conducted within 45 days under these conditions.

(f) Each owner or operator of an elemental phosphorus plant shall furnish the Administrator with a written report of the results of the emission test within 60 days of conducting the test. The report must provide the following information:

(1) The name and location of the facility.

(2) The name of the person responsible for the operation of the facility and the name of the person preparing the report (if different).

(3) A description of the effluent controls that are used on each stack, vent, or other release point and an estimate of the efficiency of each device.

(4) The results of the testing, including the results of each sampling run completed.

(5) The values used in calculating the emissions and the source of these data.

(6) Each report shall be signed and dated by a corporate officer in charge

of the facility and contain the following declaration immediately above the signature line: ''I certify under penalty of law that I have personally examined and am familiar with the information submitted herein and based on my inquiry of those individuals immediately responsible for obtaining the information, I believe that the submitted information is true, accurate and complete. I am aware that there are significant penalties for submitting false information including the possibility of fine and imprisonment. See, 18 U.S.C. 1001.''

[54 FR 51699, Dec. 15, 1989, as amended at 65 FR 62156, Oct. 17, 2000]

§ 61.124 Recordkeeping requirements.

The owner or operator of any plant must maintain records documenting the source of input parameters including the results of all measurements upon which they are based, the calculations and/or analytical methods used to derive values for input parameters, and the procedure used in emission testing. This documentation should be sufficient to allow an independent auditor to verify the accuracy of the results of the emission testing. These records must be kept at the site of the plant for at least five years and, upon request, be made available for inspection by the Administrator, or his authorized representative.

§ 61.125 Test methods and procedures.

(a) Each owner or operator of a source required to test emissions under § 61.123, unless an equivalent or alternate method has been approved by the Administrator, shall use the following test methods:

(1) Method 1 of appendix A to 40 CFR part 60 shall be used to determine sample and velocity traverses;

(2) Method 2 of appendix A to 40 CFR part 60 shall be used to determine velocity and volumetric flow rate;

(3) Method 3 of appendix A to 40 CFR part 60 shall be used for gas analysis;

(4) Method 5 of appendix A to 40 CFR part 60 shall be used to collect particulate matter containing the polonium-210; and

(5) Method 111 of appendix B to 40 CFR part 61 shall be used to determine the polonium-210 emissions.

[54 FR 51699, Dec. 15, 1989, as amended at 65 FR 62156, Oct. 17, 2000]

§ 61.126 Monitoring of operations.

(a) The owner or operator of any source subject to this subpart using a wet-scrubbing emission control device shall install, calibrate, maintain, and operate a monitoring device for the continuous measurement and recording of the pressure drop of the gas stream across each scrubber. The monitoring device must be certified by the manufacturer to be accurate within ±250 pascal (±1 inch of water). The owner or operator of any source subject to this subpart using a wet-scrubbing emission control device shall also install, calibrate, maintain, and operate a monitoring device for the continuous measurement and recording of the scrubber fluid flow rate. These continuous measurement recordings shall be maintained at the source and made available for inspection by the Administrator, or his authorized representative, for a minimum of 5 years.

(b) The owner or operator of any source subject to this subpart using an electrostatic precipitator control device shall install, calibrate, maintain, and operate a monitoring device for the continuous measurement and recording of the primary and secondary current and the voltage in each electric field. These continuous measurement recordings shall be maintained at the source and made available for inspection by the Administrator, or his authorized representative, for a minimum of 5 years.

[56 FR 65943, Dec. 19, 1991]

§ 61.127 Exemption from the reporting and testing requirements of 40 CFR 61.10.

All facilities designated under this subpart are exempt from the reporting requirements of 40 CFR 61.10.

Subpart L—National Emission Standard for Benzene Emissions from Coke By-Product Recovery Plants

SOURCE: 54 FR 38073, Sept. 14, 1989, unless otherwise noted.

§61.130 Applicability, designation of sources, and delegation of authority.

(a) The provisions of this subpart apply to each of the following sources at furnace and foundry coke by-product recovery plants: tar decanters, tar storage tanks, tar-intercepting sumps, flushing-liquor circulation tanks, light-oil sumps, light-oil condensers, light-oil decanters, wash-oil decanters, wash-oil circulation tanks, naphthalene processing, final coolers, final-cooler cooling towers, and the following equipment that are intended to operate in benzene service: pumps, valves, exhausters, pressure relief devices, sampling connection systems, open-ended valves or lines, flanges or other connectors, and control devices or systems required by §61.135.

(b) The provisions of this subpart also apply to benzene storage tanks, BTX storage tanks, light-oil storage tanks, and excess ammonia-liquor storage tanks at furnace coke by-product recovery plants.

(c) In delegating implementation and enforcement authority to a State under section 112 of the Act, the authorities contained in paragraph (d) of this section shall be retained by the Administrator and not transferred to a State.

(d) Authorities that will not be delegated to States: §61.136(d).

[54 FR 51699, Dec. 15, 1989, as amended at 56 FR 47406, Sept. 19, 1991]

§61.131 Definitions.

As used in this subpart, all terms not defined herein shall have the meaning given them in the Act, in subpart A of part 61, and in subpart V of part 61. The following terms shall have the specific meanings given them:

Annual coke production means the coke produced in the batteries connected to the coke by-product recovery plant over a 12-month period. The first 12-month period concludes on the first December 31 that comes at least 12 months after the effective date or after the date of initial startup if initial startup is after the effective date.

Benzene storage tank means any tank, reservoir, or container used to collect or store refined benzene.

BTX storage tank means any tank, reservoir, or container used to collect or store benzene-toluene-xylene or other light-oil fractions.

Car seal means a seal that is placed on the device used to change the position of a valve (e.g., from open to closed) such that the position of the valve cannot be changed without breaking the seal and requiring the replacement of the old seal, once broken, with a new seal.

Coke by-product recovery plant means any plant designed and operated for the separation and recovery of coal tar derivatives (by-products) evolved from coal during the coking process of a coke oven battery.

Equipment means each pump, valve, exhauster, pressure relief device, sampling connection system, open-ended valve or line, and flange or other connector in benzene service.

Excess ammonia-liquor storage tank means any tank, reservoir, or container used to collect or store a flushing liquor solution prior to ammonia or phenol recovery.

Exhauster means a fan located between the inlet gas flange and outlet gas flange of the coke oven gas line that provides motive power for coke oven gases.

Foundry coke means coke that is produced from raw materials with less than 26 percent volatile material by weight and that is subject to a coking period of 24 hours or more. Percent volatile material of the raw materials (by weight) is the weighted average percent volatile material of all raw materials (by weight) charged to the coke oven per coking cycle.

Foundry coke by-product recovery plant means a coke by-product recovery plant connected to coke batteries whose annual coke production is at least 75 percent foundry coke.

Flushing-liquor circulation tank means any vessel that functions to store or

contain flushing liquor that is separated from the tar in the tar decanter and is recirculated as the cooled liquor to the gas collection system.

Furnace coke means coke produced in by-product ovens that is not foundry coke.

Furnace coke by-product recovery plant means a coke by-product recovery plant that is not a foundry coke by-product recovery plant.

In benzene service means a piece of equipment, other than an exhauster, that either contains or contacts a fluid (liquid or gas) that is at least 10 percent benzene by weight or any exhauster that either contains or contacts a fluid (liquid or gas) at least 1 percent benzene by weight as determined by the provisions of § 61.137(b). The provisions of § 61.137(b) also specify how to determine that a piece of equipment is not in benzene service.

Light-oil condenser means any unit in the light-oil recovery operation that functions to condense benzene-containing vapors.

Light-oil decanter means any vessel, tank, or other type of device in the light-oil recovery operation that functions to separate light oil from water downstream of the light-oil condenser. A light-oil decanter also may be known as a light-oil separator.

Light-oil storage tank means any tank, reservoir, or container used to collect or store crude or refined light-oil.

Light-oil sump means any tank, pit, enclosure, or slop tank in light-oil recovery operations that functions as a wastewater separation device for hydrocarbon liquids on the surface of the water.

Naphthalene processing means any operations required to recover naphthalene including the separation, refining, and drying of crude or refined naphthalene.

Non-regenerative carbon adsorber means a series, over time, of non-regenerative carbon beds applied to a single source or group of sources, where non-regenerative carbon beds are carbon beds that are either never regenerated or are moved from their location for regeneration.

Process vessel means each tar decanter, flushing-liquor circulation tank, light-oil condenser, light-oil decanter, wash-oil decanter, or wash-oil circulation tank.

Regenerative carbon adsorber means a carbon adsorber applied to a single source or group of sources, in which the carbon beds are regenerated without being moved from their location.

Semiannual means a 6-month period; the first semiannual period concludes on the last day of the last full month during the 180 days following initial startup for new sources; the first semiannual period concludes on the last day of the last full month during the 180 days after the effective date of the regulation for existing sources.

Tar decanter means any vessel, tank, or container that functions to separate heavy tar and sludge from flushing liquor by means of gravity, heat, or chemical emulsion breakers. A tar decanter also may be known as a flushing-liquor decanter.

Tar storage tank means any vessel, tank, reservoir, or other type of container used to collect or store crude tar or tar-entrained naphthalene, except for tar products obtained by distillation, such as coal tar pitch, creosotes, or carbolic oil. This definition also includes any vessel, tank, reservoir, or container used to reduce the water content of the tar by means of heat, residence time, chemical emulsion breakers, or centrifugal separation. A tar storage tank also may be known as a tar-dewatering tank.

Tar-intercepting sump means any tank, pit, or enclosure that serves to receive or separate tars and aqueous condensate discharged from the primary cooler. A tar-intercepting sump also may be known as a primary-cooler decanter.

Vapor incinerator means any enclosed combustion device that is used for destroying organic compounds and does not necessarily extract energy in the form of steam or process heat.

Wash-oil circulation tank means any vessel that functions to hold the wash oil used in light-oil recovery operations or the wash oil used in the wash-oil final cooler.

Wash-oil decanter means any vessel that functions to separate, by gravity, the condensed water from the wash oil

received from a wash-oil final cooler or from a light-oil scrubber.

[54 FR 38073, Sept. 14, 1989, as amended at 56 FR 47406, Sept. 19, 1991]

§61.132 Standard: Process vessels, storage tanks, and tar-intercepting sumps.

(a)(1) Each owner or operator of a furnace or a foundry coke byproduct recovery plant shall enclose and seal all openings on each process vessel, tar storage tank, and tar-intercepting sump.

(2) The owner or operator shall duct gases from each process vessel, tar storage tank, and tar-intercepting sump to the gas collection system, gas distribution system, or other enclosed point in the by-product recovery process where the benzene in the gas will be recovered or destroyed. This control system shall be designed and operated for no detectable emissions, as indicated by an instrument reading of less than 500 ppm above background and visual inspections, as determined by the methods specified in §61.245(c). This system can be designed as a closed, positive pressure, gas blanketing system.

(i) Except, the owner or operator may elect to install, operate, and maintain a pressure relief device, vacuum relief device, an access hatch, and a sampling port on each process vessel, tar storage tank, and tar-intercepting sump. Each access hatch and sampling port must be equipped with a gasket and a cover, seal, or lid that must be kept in a closed position at all times, unless in actual use.

(ii) The owner or operator may elect to leave open to the atmosphere the portion of the liquid surface in each tar decanter necessary to permit operation of a sludge conveyor. If the owner or operator elects to maintain an opening on part of the liquid surface of the tar decanter, the owner or operator shall install, operate, and maintain a water leg seal on the tar decanter roof near the sludge discharge chute to ensure enclosure of the major portion of liquid surface not necessary for the operation of the sludge conveyor.

(b) Following the installation of any control equipment used to meet the requirements of paragraph (a) of this section, the owner or operator shall monitor the connections and seals on each control system to determine if it is operating with no detectable emissions, using Method 21 (40 CFR part 60, appendix A) and procedures specified in §61.245(c), and shall visually inspect each source (including sealing materials) and the ductwork of the control system for evidence of visible defects such as gaps or tears. This monitoring and inspection shall be conducted on a semiannual basis and at any other time after the control system is repressurized with blanketing gas following removal of the cover or opening of the access hatch.

(1) If an instrument reading indicates an organic chemical concentration more than 500 ppm above a background concentration, as measured by Method 21, a leak is detected.

(2) If visible defects such as gaps in sealing materials are observed during a visual inspection, a leak is detected.

(3) When a leak is detected, it shall be repaired as soon as practicable, but not later than 15 calendar days after it is detected.

(4) A first attempt at repair of any leak or visible defect shall be made no later than 5 calendar days after each leak is detected.

(c) Following the installation of any control system used to meet the requirements of paragraph (a) of this section, the owner or operator shall conduct a maintenance inspection of the control system on an annual basis for evidence of system abnormalities, such as blocked or plugged lines, sticking valves, plugged condensate traps, and other maintenance defects that could result in abnormal system operation. The owner or operator shall make a first attempt at repair within 5 days, with repair within 15 days of detection.

(d) Each owner or operator of a furnace coke by-product recovery plant also shall comply with the requirements of paragraphs (a)–(c) of this section for each benzene storage tank, BTX storage tank, light-oil storage tank, and excess ammonia-liquor storage tank.

[54 FR 38073, Sept. 14, 1989, as amended at 65 FR 62157, Oct. 17, 2000]

§ 61.133 Standard: Light-oil sumps.

(a) Each owner or operator of a light-oil sump shall enclose and seal the liquid surface in the sump to form a closed system to contain the emissions.

(1) Except, the owner or operator may elect to install, operate, and maintain a vent on the light-oil sump cover. Each vent pipe must be equipped with a water leg seal, a pressure relief device, or vacuum relief device.

(2) Except, the owner or operator may elect to install, operate, and maintain an access hatch on each light-oil sump cover. Each access hatch must be equipped with a gasket and a cover, seal, or lid that must be kept in a closed position at all times, unless in actual use.

(3) The light-oil sump cover may be removed for periodic maintenance but must be replaced (with seal) at completion of the maintenance operation.

(b) The venting of steam or other gases from the by-product process to the light-oil sump is not permitted.

(c) Following the installation of any control equipment used to meet the requirements of paragraph (a) of this section, the owner or operator shall monitor the connections and seals on each control system to determine if it is operating with no detectable emissions, using Method 21 (40 CFR part 60, appendix A) and the procedures specified in § 61.245(c), and shall visually inspect each source (including sealing materials) for evidence of visible defects such as gaps or tears. This monitoring and inspection shall be conducted semiannually and at any other time the cover is removed.

(1) If an instrument reading indicates an organic chemical concentration more than 500 ppm above a background concentration, as measured by Method 21, a leak is detected.

(2) If visible defects such as gaps in sealing materials are observed during a visual inspection, a leak is detected.

(3) When a leak is detected, it shall be repaired as soon as practicable, but not later than 15 calendar days after it is detected.

(4) A first attempt at repair of any leak or visible defect shall be made no later than 5 calendar days after each leak is detected.

[54 FR 38073, Sept. 14, 1989, as amended at 65 FR 62157, Oct. 17, 2000]

§ 61.134 Standard: Naphthalene processing, final coolers, and final-cooler cooling towers.

(a) No (''zero'') emissions are allowed from naphthalene processing, final coolers and final-cooler cooling towers at coke by-product recovery plants.

§ 61.135 Standard: Equipment leaks.

(a) Each owner or operator of equipment in benzene service shall comply with the requirements of 40 CFR part 61, subpart V, except as provided in this section.

(b) The provisions of § 61.242–3 and § 61.242–9 of subpart V do not apply to this subpart.

(c) Each piece of equipment in benzene service to which this subpart applies shall be marked in such a manner that it can be distinguished readily from other pieces of equipment in benzene service.

(d) Each exhauster shall be monitored quarterly to detect leaks by the methods specified in § 61.245(b) except as provided in § 61.136(d) and paragraphs (e)–(g) of this section.

(1) If an instrument reading of 10,000 ppm or greater is measured, a leak is detected.

(2) When a leak is detected, it shall be repaired as soon as practicable, but no later than 15 calendar days after it is detected, except as provided in § 61.242–10 (a) and (b). A first attempt at repair shall be made no later than 5 calendar days after each leak is detected.

(e) Each exhauster equipped with a seal system that includes a barrier fluid system and that prevents leakage of process fluids to the atmosphere is exempt from the requirements of paragraph (d) of this section provided the following requirements are met:

(1) Each exhauster seal system is:

(i) Operated with the barrier fluid at a pressure that is greater than the exhauster stuffing box pressure; or

(ii) Equipped with a barrier fluid system that is connected by a closed vent

system to a control device that complies with the requirements of §61.242–11; or

(iii) Equipped with a system that purges the barrier fluid into a process stream with zero benzene emissions to the atmosphere.

(2) The barrier fluid is not in benzene service.

(3) Each barrier fluid system shall be equipped with a sensor that will detect failure of the seal system, barrier fluid system, or both.

(4)(i) Each sensor as described in paragraph (e)(3) of this section shall be checked daily or shall be equipped with an audible alarm.

(ii) The owner or operator shall determine, based on design considerations and operating experience, a criterion that indicates failure of the seal system, the barrier fluid system, or both.

(5) If the sensor indicates failure of the seal system, the barrier system, or both (based on the criterion determined under paragraph (e)(4)(ii) of this section), a leak is detected.

(6)(i) When a leak is detected, it shall be repaired as soon as practicable, but not later than 15 calendar days after it is detected, except as provided in §61.242–10.

(ii) A first attempt at repair shall be made no later than 5 calendar days after each leak is detected.

(f) An exhauster is exempt from the requirements of paragraph (d) of this section if it is equipped with a closed vent system capable of capturing and transporting any leakage from the seal or seals to a control device that complies with the requirements of §61.242–11 except as provided in paragraph (g) of this section.

(g) Any exhauster that is designated, as described in §61.246(e) for no detectable emissions, as indicated by an instrument reading of less than 500 ppm above background, is exempt from the requirements of paragraph (d) of this section if the exhauster:

(1) Is demonstrated to be operating with no detectable emissions, as indicated by an instrument reading of less than 500 ppm above background, as measured by the methods specified in §61.245(c); and

(2) Is tested for compliance with paragraph (g)(1) of this section initially upon designation, annually, and at other times requested by the Administrator.

(h) Any exhauster that is in vacuum service is excluded from the requirements of this subpart if it is identified as required in §61.246(e)(5).

§61.136 Compliance provisions and alternative means of emission limitation.

(a) Each owner or operator subject to the provisions of this subpart shall demonstrate compliance with the requirements of §§61.132 through 61.135 for each new and existing source, except as provided under §§61.243–1 and 61.243–2.

(b) Compliance with this subpart shall be determined by a review of records, review of performance test results, inspections, or any combination thereof, using the methods and procedures specified in §61.137.

(c) On the first January 1 after the first year that a plant's annual coke production is less than 75 percent foundry coke, the coke by-product recovery plant becomes a furnace coke by-product recovery plant and shall comply with 61.132(d). Once a plant becomes a furnace coke by-product recovery plant, it will continue to be considered a furnace coke by-product recovery plant, regardless of the coke production in subsequent years.

(d)(1) An owner or operator may request permission to use an alternative means of emission limitation to meet the requirements in §§61.132, 61.133, and 61.135 of this subpart and §§61.242–2, –5, –6, –7, –8, and –11 of subpart V. Permission to use an alternative means of emission limitation shall be requested as specified in §61.12(d).

(2) When the Administrator evaluates requests for permission to use alternative means of emission limitation for sources subject to §§61.132 and 61.133 (except tar decanters) the Administrator shall compare test data for the means of emission limitation to a benzene control efficiency of 98 percent. For tar decanters, the Administrator shall compare test data for the means of emission limitation to a benzene control efficiency of 95 percent.

(3) For any requests for permission to use an alternative to the work practices required under § 61.135, the provisions of § 61.244(c) shall apply.

§ 61.137 Test methods and procedures.

(a) Each owner or operator subject to the provisions of this subpart shall comply with the requirements in § 61.245 of 40 CFR part 61, subpart V.

(b) To determine whether or not a piece of equipment is in benzene service, the methods in § 61.245(d) shall be used, except that, for exhausters, the percent benzene shall be 1 percent by weight, rather than the 10 percent by weight described in § 61.245(d).

§ 61.138 Recordkeeping and reporting requirements.

(a) The following information pertaining to the design of control equipment installed to comply with §§ 61.132 through 61.134 shall be recorded and kept in a readily accessible location:

(1) Detailed schematics, design specifications, and piping and instrumentation diagrams.

(2) The dates and descriptions of any changes in the design specifications.

(b) The following information pertaining to sources subject to § 61.132 and sources subject to § 61.133 shall be recorded and maintained for 2 years following each semiannual (and other) inspection and each annual maintenance inspection:

(1) The date of the inspection and the name of the inspector.

(2) A brief description of each visible defect in the source or control equipment and the method and date of repair of the defect.

(3) The presence of a leak, as measured using the method described in § 61.245(c). The record shall include the date of attempted and actual repair and method of repair of the leak.

(4) A brief description of any system abnormalities found during the annual maintenance inspection, the repairs made, the date of attempted repair, and the date of actual repair.

(c) Each owner or operator of a source subject to § 61.135 shall comply with § 61.246.

(d) For foundry coke by-product recovery plants, the annual coke production of both furnace and foundry coke shall be recorded and maintained for 2 years following each determination.

(e)(1) An owner or operator of any source to which this subpart applies shall submit a statement in writing notifying the Administrator that the requirements of this subpart and 40 CFR 61, subpart V, have been implemented.

(2) In the case of an existing source or a new source that has an initial startup date preceding the effective date, the statement is to be submitted within 90 days of the effective date, unless a waiver of compliance is granted under § 61.11, along with the information required under § 61.10. If a waiver of compliance is granted, the statement is to be submitted on a date scheduled by the Administrator.

(3) In the case of a new source that did not have an initial startup date preceding the effective date, the statement shall be submitted with the application for approval of construction, as described under § 61.07.

(4) The statement is to contain the following information for each source:

(i) Type of source (e.g., a light-oil sump or pump).

(ii) For equipment in benzene service, equipment identification number and process unit identification: percent by weight benzene in the fluid at the equipment; and process fluid state in the equipment (gas/vapor or liquid).

(iii) Method of compliance with the standard (e.g., ''gas blanketing,'' ''monthly leak detection and repair,'' or ''equipped with dual mechanical seals''). This includes whether the plant plans to be a furnace or foundry coke by-product recovery plant for the purposes of § 61.132(d).

(f) A report shall be submitted to the Administrator semiannually starting 6 months after the initial reports required in § 61.138(e) and § 61.10, which includes the following information:

(1) For sources subject to § 61.132 and sources subject to § 61.133,

(i) A brief description of any visible defect in the source or ductwork,

(ii) The number of leaks detected and repaired, and

(iii) A brief description of any system abnormalities found during each annual maintenance inspection that occurred in the reporting period and the repairs made.

(2) For equipment in benzene service subject to §61.135(a), information required by §61.247(b).

(3) For each exhauster subject to §61.135 for each quarter during the semiannual reporting period,

(i) The number of exhausters for which leaks were detected as described in §61.135 (d) and (e)(5),

(ii) The number of exhausters for which leaks were repaired as required in §61.135 (d) and (e)(6),

(iii) The results of performance tests to determine compliance with §61.135(g) conducted within the semiannual reporting period.

(4) A statement signed by the owner or operator stating whether all provisions of 40 CFR part 61, subpart L, have been fulfilled during the semiannual reporting period.

(5) For foundry coke by-product recovery plants, the annual coke production of both furnace and foundry coke, if determined during the reporting period.

(6) Revisions to items reported according to paragraph (e) of this section if changes have occurred since the initial report or subsequent revisions to the initial report.

NOTE: Compliance with the requirements of §61.10(c) is not required for revisions documented under this paragraph.

(g) In the first report submitted as required in §61.138(e), the report shall include a reporting schedule stating the months that semiannual reports shall be submitted. Subsequent reports shall be submitted according to that schedule unless a revised schedule has been submitted in a previous semiannual report.

(h) An owner or operator electing to comply with the provisions of §§61.243–1 and 61.243–2 shall notify the Administrator of the alternative standard selected 90 days before implementing either of the provisions.

(i) An application for approval of construction or modification, as required under §§61.05(a) and 61.07, will not be required for sources subject to 61.135 if:

(1) The new source complies with §61.135, and

(2) In the next semiannual report required by §61.138(f), the information described in §61.138(e)(4) is reported.

[55 FR 38073, Sept. 14, 1990; 55 FR 14037, Apr. 13, 1990]

§61.139 Provisions for alternative means for process vessels, storage tanks, and tar-intercepting sumps.

(a) As an alternative means of emission limitation for a source subject to §61.132(a)(2) or §61.132(d), the owner or operator may route gases from the source through a closed vent system to a carbon adsorber or vapor incinerator that is at least 98 percent efficient at removing benzene from the gas stream.

(1) The provisions of §61.132(a)(1) and §61.132(a) (2)(i) and (ii) shall apply to the source.

(2) The seals on the source and closed vent system shall be designed and operated for no detectable emissions, as indicated by an instrument reading of less than 500 ppm above background and visual inspections, as determined by the methods specified in §61.245(c).

(3) The provisions of §61.132(b) shall apply to the seals and closed vent system.

(b) For each carbon adsorber, the owner or operator shall adhere to the following practices:

(1) Benzene captured by each carbon adsorber shall be recycled or destroyed in a manner that prevents benzene from being emitted to the atmosphere.

(2) Carbon removed from each carbon adsorber shall be regenerated or destroyed in a manner that prevents benzene from being emitted to the atmosphere.

(3) For each regenerative carbon adsorber, the owner or operator shall initiate regeneration of the spent carbon bed and vent the emissions from the source to a regenerated carbon bed no later than when the benzene concentration or organic vapor concentration level in the adsorber outlet vent reaches the maximum concentration point, as determined in §61.139(h).

(4) For each non-regenerative carbon adsorber, the owner or operator shall replace the carbon at the scheduled replacement time, or as soon as practicable (but not later than 16 hours) after an exceedance of the maximum

concentration point is detected, whichever is sooner.

(i) For each non-regenerative carbon adsorber, the scheduled replacement time means the day that is estimated to be 90 percent of the demonstrated bed life, as defined in § 61.139(h)(5).

(ii) For each non-regenerative carbon adsorber, an exceedance of the maximum concentration point shall mean any concentration greater than or equal to the maximum concentration point as determined in § 61.139(h).

(c) Compliance with the provisions of this section shall be determined as follows:

(1) For each carbon adsorber and vapor incinerator, the owner or operator shall demonstrate compliance with the efficiency limit by a compliance test as specified in § 61.13 and § 61.139(g). If a waiver of compliance has been granted under § 61.11, the deadline for conducting the initial compliance test shall be incorporated into the terms of the waiver. The benzene removal efficiency rate for each carbon adsorber and vapor incinerator shall be calculated as in the following equation:

$$E = \frac{\sum_{i=1}^{n} Q_{bi}C_{bi} - \sum_{j=1}^{m} Q_{aj}C_{aj}}{\sum_{i=1}^{n} Q_{bi}C_{bi}} \times 100$$

Where:

E=percent removal of benzene.

C_{aj}=concentration of benzene in vents after the control device, parts per million (ppm).

C_{bi}=concentration of benzene in vents before the control device, ppm.

Q_{aj} = volumetric flow rate in vents after the control device, standard cubic meters/minute (scm/min) [standard cubic feet/minute (scf/min)].

Q_{bi} = volumetric flow rate in vents before the control device, scm/min (scf/min).

m=number of vents after the control device.

n=number of vents after the control device.

(2) Compliance with all other provisions in this section shall be determined by inspections or the review of records and reports.

(d) For each regenerative carbon adsorber, the owner or operator shall install and operate a monitoring device that continuously indicates and records either the concentration of benzene or the concentration level of organic compounds in the outlet vent of the carbon adsorber. The monitoring device shall be installed, calibrated, maintained and operated in accordance with the manufacturer's specifications.

(1) Measurement of benzene concentration shall be made according to § 61.139(g)(2).

(2) All measurements of organic compound concentration levels shall be reasonable indicators of benzene concentration.

(i) The monitoring device for measuring organic compound concentration levels shall be based on one of the following detection principles: Infrared absorption, flame ionization, catalytic oxidation, photoionization, or thermal conductivity.

(ii) The monitoring device shall meet the requirements of part 60, appendix A, Method 21, sections 2, 3, 4.1, 4.2, and 4.4. For the purpose of the application of Method 21 to this section, the words ''leak definition'' shall be the maximum concentration point, which would be estimated until it is established under § 61.139(h). The calibration gas shall either be benzene or methane and shall be at a concentration associated with 125 percent of the expected organic compound concentration level for the carbon adsorber outlet vent.

(e) For each non-regenerative carbon adsorber, the owner or operator shall monitor either the concentration of benzene or the concentration level of organic compounds at the outlet vent of the adsorber. The monitoring device shall be calibrated, operated and maintained in accordance with the manufacturer's specifications.

(1) Measurements of benzene concentration shall be made according to § 61.139(g)(2). The measurement shall be conducted over at least one 5-minute interval during which flow into the carbon adsorber is expected to occur.

(2) All measurements of organic compound concentration levels shall be reasonable indicators of benzene concentration.

(i) The monitoring device for measuring organic compound concentration levels shall meet the requirements of paragraphs § 61.139(d)(2) (i) and (ii).

(ii) The probe inlet of the monitoring device shall be placed at approximately

the center of the carbon adsorber outlet vent. The probe shall be held there for at least 5 minutes during which flow into the carbon adsorber is expected to occur. The maximum reading during that period shall be used as the measurement.

(3) Monitoring shall be performed at least once within the first 7 days after replacement of the carbon bed occurs, and monthly thereafter until 10 days before the scheduled replacement time, at which point monitoring shall be done daily, except as specified in paragraphs (e)(4) and (e)(5) of this section.

(4) If an owner or operator detects an exceedance of the maximum concentration point during the monthly monitoring or on the first day of daily monitoring as prescribed in paragraph (e)(3) of this section, then, after replacing the bed, the owner or operator shall begin the daily monitoring of the replacement carbon bed on the day after the last scheduled monthly monitoring before the exceedance was detected, or 10 days before the exceedance was detected, whichever is longer.

(5) If an owner or operator detects an exceedance of the maximum concentration point during the daily monitoring as prescribed in paragraph (e)(3) of this section, except on the first day, then, after replacing the bed, the owner or operator shall begin the daily monitoring of the replacement carbon bed 10 days before the exceedance was detected.

(6) If the owner or operator is monitoring on the schedule required in paragraph (e)(4) or paragraph (e)(5) of this section, and the scheduled replacement time is reached without exceeding the maximum concentration point, the owner or operator may return to the monitoring schedule in paragraph (e)(3) of this section for subsequent carbon beds.

NOTE: This note provides an example of the monitoring schedules in paragraphs (e)(3), (e)(4) and (e)(5) of this section. Assume that the scheduled replacement time for a non-regenerative carbon adsorber is the 105th day after installation. According to the monitoring schedule in paragraph (e)(3) of this section, initial monitoring would be done within 7 days after installation, monthly monitoring would be done on the 30th, 60th and 90th days, and daily monitoring would begin on the 95th day after installation. Now assume that an exceedance of the maximum concentration point is detected on the 90th day after installation. On the replacement carbon bed, the owner or operator would begin daily monitoring on the 61st day after installation (i.e., the day after the last scheduled monthly monitoring before the exceedance was detected), according to the requirements in paragraph (e)(4) of this section. If, instead, the exceedance were detected on the first bed on the 95th day, the daily monitoring of the replacement bed would begin on the 85th day after installation (i.e., 10 days before the point in the cycle where the exceedance was detected); this is a second example of the requirements in paragraph (e)(4) of this section. Finally, assume that an exceedance of the maximum concentration point is detected on the 100th day after the first carbon adsorber was installed. According to paragraph (e)(5) of this section, daily monitoring of the replacement bed would begin on the 90th day after installation (i.e., 10 days earlier than when the exceedance was detected on the previous bed). In all of these examples, the initial monitoring of the replacement bed within 7 days of installation and the monthly monitoring would proceed as set out in paragraph (e)(3) of this section until daily monitoring was required.

(f) For each vapor incinerator, the owner or operator shall comply with the monitoring requirements specified below:

(1) Install, calibrate, maintain, and operate according to the manufacturer's specifications a temperature monitoring device equipped with a continuous recorder and having an accuracy of ±1 percent of the temperature being monitored expressed in degrees Celsius or ±0.5 °C, whichever is greater.

(i) Where a vapor incinerator other than a catalytic incinerator is used, the temperature monitoring device shall be installed in the firebox.

(ii) Where a catalytic incinerator is used, temperature monitoring devices shall be installed in the gas stream immediately before and after the catalyst bed.

(2) Comply with paragraph (f)(2)(i), paragraph (f)(2)(ii), or paragraph (f)(3)(iii) of this section.

(i) Install, calibrate, maintain and operate according to the manufacturer's specifications a flow indicator that provides a record of vent stream flow to the incinerator at least once every hour for each source. The flow indicator shall be installed in the vent stream from each source at a point

closest to the inlet of each vapor incinerator and before being joined with any other vent stream.

(ii) Install, calibrate, maintain and operate according to the manufacturer's specifications a flow indicator that provides a record of vent stream flow away from the vapor incinerator at least once every 15 minutes. The flow indicator shall be installed in each bypass line, immediately downstream of the valve that, if opened, would divert the vent stream away from the vapor incinerator.

(iii) Where a valve that opens a bypass line is secured in the closed position with a car seal or a lock-and-key configuration, a flow indicator is not required. The owner or operator shall perform a visual inspection at least once every month to check the position of the valve and the condition of the car seal or lock-and-key configuration. The owner or operator shall also record the date and duration of each time that the valve was opened and the vent stream diverted away from the vapor incinerator.

(g) In conducting the compliance tests required in § 61.139(c), and measurements specified in § 61.139(d)(1), (e)(1) and (h)(3)(ii), the owner or operator shall use as reference methods the test methods and procedures in appendix A to 40 CFR part 60, or other methods as specified in this paragraph, except as specified in § 61.13.

(1) For compliance tests, as described in § 61.139(c)(1), the following provisions apply.

(i) All tests shall be run under representative emission concentration and vent flow rate conditions. For sources with intermittent flow rates, representative conditions shall include typical emission surges (for example, during the loading of a storage tank).

(ii) Each test shall consist of three separate runs. These runs will be averaged to yield the volumetric flow rates and benzene concentrations in the equation in § 61.139(c)(1). Each run shall be a minimum of 1 hour.

(A) For each regenerative carbon adsorber, each run shall take place in one adsorption cycle, to include a minimum of 1 hour of sampling immediately preceding the initiation of carbon bed regeneration.

(B) For each non-regenerative carbon adsorber, all runs can occur during one adsorption cycle.

(iii) The measurements during the runs shall be paired so that the inlet and outlet to the control device are measured simultaneously.

(iv) Method 1 or 1A shall be used as applicable for locating measurement sites.

(v) Method 2, 2A, or 2D shall be used as applicable for measuring vent flow rates.

(vi) Method 18 shall be used for determining the benzene concentrations (C_{aj} and C_{bi}). Either the integrated bag sampling and analysis procedure or the direct interface procedure may be used. A separation column constructed of stainless steel, 1.83 m by 3.2 mm, containing 10 percent 1,2,3-tris (2-cyanoethoxy) propane (TECP) on 80/100 mesh Chromosorb P AW, with a column temperature of 80 °C, a detector temperature of 225 °C, and a flow rate of approximately 20 ml/min, may produce adequate separations. The analyst can use other columns, provided that the precision and accuracy of the analysis of benzene standards is not impaired. The analyst shall have available for review information confirming that there is adequate resolution of the benzene peak.

(A) If the integrated bag sampling and analysis procedure is used, the sample rate shall be adjusted to maintain a constant proportion to vent flow rate.

(B) If the direct interface sampling and analysis procedure is used, then each performance test run shall be conducted in intervals of 5 minutes. For each interval ''t,'' readings from each measurement shall be recorded, and the flow rate (Q_{aj} or Q_{bi}) and the corresponding benzene concentration (C_{aj} or C_{bi}) shall be determined. The sampling system shall be constructed to include a mixing chamber of a volume equal to 5 times the sampling flow rate per minute. Each analysis performed by the chromatograph will then represent an averaged emission value for a 5-minute time period. The vent flow rate readings shall be timed to account for the total sample system residence time. A dual column, dual detector chromatograph can be used to achieve

an analysis interval of 5 minutes. The individual benzene concentrations shall be vent flow rate weighted to determine sample run average concentrations. The individual vent flow rates shall be time averaged to determine sample run average flow rates.

(2) For testing the benzene concentration at the outlet vent of the carbon adsorber as specified under §§61.139(d)(1), (e)(1) and (h)(3)(ii), the following provisions apply.

(i) The measurement shall be conducted over one 5-minute period.

(ii) The requirements in §61.139(g)(1)(i) shall apply to the extent practicable.

(iii) The requirements in §61.139(g)(1)(vi) shall apply. Section 7.2 of method 18 shall be used as described in §61.139(g)(1)(vi)(B) for benzene concentration measurements.

(h) For each carbon adsorber, the maximum concentration point shall be expressed either as a benzene concentration or organic compound concentration level, whichever is to be indicated by the monitoring device chosen under §61.139 (d) or (e).

(1) For each regenerative carbon adsorber, the owner or operator shall determine the maximum concentration point at the following times:

(i) No later than the deadline for the initial compliance test as specified in §61.139(c)(1);

(ii) At the request of the Administrator; and

(iii) At any time chosen by the owner or operator.

(2) For each non-regenerative carbon adsorber, the owner or operator shall determine the maximum concentration point at the following times:

(i) On the first carbon bed to be installed in the adsorber;

(ii) At the request of the Administrator;

(iii) On the next carbon bed after the maximum concentration point has been exceeded (before the scheduled replacement time) for each of three previous carbon beds in the adsorber since the most recent determination; and

(iv) At any other time chosen by the owner or operator.

(3) The maximum concentration point for each carbon adsorber shall be determined through the simultaneous measurement of the outlet of the carbon adsorber with the monitoring device and Method 18, except as allowed in paragraph (h)(4) of this section.

(i) Several data points shall be collected according to a schedule determined by the owner or operator. The schedule shall be designed to take frequent samples near the expected maximum concentration point.

(ii) Each data point shall consist of one 5-minute benzene concentration measurement using Method 18 as specified in §61.139(g)(2), and of a simultaneous measurement by the monitoring device. The monitoring device measurement shall be conducted according to §61.139 (d) or (e), whichever is applicable.

(iii) The maximum concentration point shall be the concentration level, as indicated by the monitoring device, for the last data point at which the benzene concentration is less than 2 percent of the average value of the benzene concentration at the inlet to the carbon adsorber during the most recent compliance test.

(4) If the maximum concentration point is expressed as a benzene concentration, the owner or operator may determine it by calibrating the monitoring device with benzene at a concentration that is 2 percent of the average benzene concentration measured at the inlet to the carbon adsorber during the most recent compliance test. The reading on the monitoring device corresponding to the calibration concentration shall be the maximum concentration point. This method of determination would affect the owner or operator as follows:

(i) For a regenerative carbon adsorber, the owner or operator is exempt from the provisions in paragraph (h)(3) of this section.

(ii) For a non-regenerative carbon adsorber, the owner or operator is required to collect the data points in paragraph (h)(3) of this section with only the monitoring device, and is exempt from the simultaneous Method 18 measurement.

(5) For each non-regenerative carbon adsorber, the demonstrated bed life shall be the carbon bed life, measured

in days from the time the bed is installed until the maximum concentration point is reached, for the carbon bed that is used to determine the maximum concentration point.

(i) The following recordkeeping requirements are applicable to owners and operators of control devices subject to § 61.139. All records shall be kept updated and in a readily accessible location.

(1) The following information shall be recorded for each control device for the life of the control device:

(i) The design characteristics of the control device and a list of the source or sources vented to it.

(ii) For each carbon absorber, a plan for the method for handling captured benzene and removed carbon to comply with paragraphs (b)(1) and (2) of this section.

(iii) The dates and descriptions of any changes in the design specifications or plan.

(iv) For each carbon adsorber for which organic compounds are monitored as provided under § 61.139 (d) and (e), documentation to show that the measurements of organic compound concentrations are reasonable indicators of benzene concentrations.

(2) For each compliance test as specified in § 61.139(c)(1), the date of the test, the results of the test, and other data needed to determine emissions shall be recorded as specified in § 61.13(g) for at least 2 years or until the next compliance test on the control device, whichever is longer.

(3) For each vapor incinerator, the average firebox temperature of the incinerator (or the average temperature upstream and downstream of the catalyst bed for a catalytic incinerator), measured and averaged over the most recent compliance test shall be recorded for at least 2 years or until the next compliance test on the incinerator, whichever is longer.

(4) For each carbon adsorber, for each determination of a maximum concentration point as specified in § 61.139(h), the date of the determination, the maximum concentration point, and data needed to make the determination shall be recorded for at least 2 years or until the next maximum concentration point determination on the carbon adsorber, whichever is longer.

(5) For each carbon absorber, the dates of and data from the monitoring required in § 61.139(d) and (e), the date and time of replacement of each carbon bed, the date of each exceedance of the maximum concentration point, and a brief description of the corrective action taken shall be recorded for at least 2 years. Also, the occurrences when the captured benzene or spent carbon are not handled as required in § 61.139(b)(1) and (2) shall be recorded for at least 2 years.

(6) For each vapor incinerator, the data from the monitoring required in § 61.139(f)(1), the dates of all periods of operation during which the parameter boundaries established during the most recent compliance test are exceeded, and a brief description of the corrective action taken shall be recorded for at least 2 years. A period of operation during which the parameter boundaries are exceeded is a 3-hour period of operation during which:

(i) For each vapor incinerator other than a catalytic incinerator, the average combustion temperature is more than 28 °C (50 °F) below the average combustion temperature during the most recent performance test.

(ii) For each catalytic incinerator, the average temperature of the vent stream immediately before the catalyst bed is more than 28 °C (50 °F) below the average temperature of the vent stream during the most recent performance test, or the average temperature difference across the catalyst bed is less than 80 percent of the average temperature difference across the catalyst bed during the most recent performance test.

(7) For each vapor incinerator, the following shall be recorded for at least 2 years:

(i) If subject to § 61.139(f)(2)(i), records of the flow indication, and of all periods when the vent stream is diverted from the vapor incinerator or has no flow rate.

(ii) If subject to § 61.139(f)(2)(ii), records of the flow indication, and of all periods when the vent stream is diverted from the vapor incinerator.

(iii) If subject to § 61.139(f)(2)(iii), records of the conditions found during

each monthly inspection, and of each period when the car seal is broken, when the valve position is changed, or when maintenance on the bypass line valve is performed.

(j) The following reporting requirements are applicable to owners or operators of control devices subject to §61.139:

(1) Compliance tests shall be reported as specified in §61.13(f).

(2) The following information shall be reported as part of the semiannual reports required in §61.138(f).

(i) For each carbon adsorber:

(A) The date and time of detection of each exceedance of the maximum concentration point and a brief description of the time and nature of the corrective action taken.

(B) The date of each time that the captured benzene or removed carbon was not handled as required in §61.139 (b)(1) and (2), and a brief description of the corrective action taken.

(C) The date of each determination of the maximum concentration point, as described in §61.139(h), and a brief reason for the determination.

(ii) For each vapor incinerator, the date and duration of each exceedance of the boundary parameters recorded under §61.139(i)(6) and a brief description of the corrective action taken.

(iii) For each vapor incinerator, the date and duration of each period specified as follows:

(A) Each period recorded under §61.139(i)(7)(i) when the vent stream is diverted from the control device or has no flow rate;

(B) Each period recorded under §61.139(i)(7)(ii) when the vent stream is diverted from the control device; and

(C) Each period recorded under §61.139(i)(7)(iii) when the vent stream is diverted from the control device, when the car seal is broken, when the valve is unlocked, or when the valve position has changed.

(iv) For each vapor incinerator, the owner or operator shall specify the method of monitoring chosen under paragraph (f)(2) of this section in the first semiannual report. Any time the owner or operator changes that choice, he shall specify the change in the first semiannual report following the change.

[56 FR 47407, Sept. 19, 1991, as amended at 64 FR 7467, Feb. 12, 1999; 65 FR 62157, Oct. 17, 2000]

Subpart M—National Emission Standard for Asbestos

AUTHORITY: 42 U.S.C. 7401, 7412, 7414, 7416, 7601.

SOURCE: 49 FR 13661, Apr. 5, 1984, unless otherwise noted.

§61.140 Applicability.

The provisions of this subpart are applicable to those sources specified in §§61.142 through 61.151, 61.154, and 61.155.

[55 FR 48414, Nov. 20, 1990]

§61.141 Definitions.

All terms that are used in this subpart and are not defined below are given the same meaning as in the Act and in subpart A of this part.

Active waste disposal site means any disposal site other than an inactive site.

Adequately wet means sufficiently mix or penetrate with liquid to prevent the release of particulates. If visible emissions are observed coming from asbestos-containing material, then that material has not been adequately wetted. However, the absence of visible emissions is not sufficient evidence of being adequately wet.

Asbestos means the asbestiform varieties of serpentinite (chrysotile), riebeckite (crocidolite), cummingtonite-grunerite, anthophyllite, and actinolite-tremolite.

Asbestos-containing waste materials means mill tailings or any waste that contains commercial asbestos and is generated by a source subject to the provisions of this subpart. This term includes filters from control devices, friable asbestos waste material, and bags or other similar packaging contaminated with commercial asbestos. As applied to demolition and renovation operations, this term also includes regulated asbestos-containing material waste and materials contaminated with asbestos including disposable equipment and clothing.

Asbestos mill means any facility engaged in converting, or in any intermediate step in converting, asbestos ore into commercial asbestos. Outside storage of asbestos material is not considered a part of the asbestos mill.

Asbestos tailings means any solid waste that contains asbestos and is a product of asbestos mining or milling operations.

Asbestos waste from control devices means any waste material that contains asbestos and is collected by a pollution control device.

Category I nonfriable asbestos-containing material (ACM) means asbestos-containing packings, gaskets, resilient floor covering, and asphalt roofing products containing more than 1 percent asbestos as determined using the method specified in appendix E, subpart E, 40 CFR part 763, section 1, Polarized Light Microscopy.

Category II nonfriable ACM means any material, excluding Category I nonfriable ACM, containing more than 1 percent asbestos as determined using the methods specified in appendix E, subpart E, 40 CFR part 763, section 1, Polarized Light Microscopy that, when dry, cannot be crumbled, pulverized, or reduced to powder by hand pressure.

Commercial asbestos means any material containing asbestos that is extracted from ore and has value because of its asbestos content.

Cutting means to penetrate with a sharp-edged instrument and includes sawing, but does not include shearing, slicing, or punching.

Demolition means the wrecking or taking out of any load-supporting structural member of a facility together with any related handling operations or the intentional burning of any facility.

Emergency renovation operation means a renovation operation that was not planned but results from a sudden, unexpected event that, if not immediately attended to, presents a safety or public health hazard, is necessary to protect equipment from damage, or is necessary to avoid imposing an unreasonable financial burden. This term includes operations necessitated by nonroutine failures of equipment.

Fabricating means any processing (*e.g.*, cutting, sawing, drilling) of a manufactured product that contains commercial asbestos, with the exception of processing at temporary sites (field fabricating) for the construction or restoration of facilities. In the case of friction products, fabricating includes bonding, debonding, grinding, sawing, drilling, or other similar operations performed as part of fabricating.

Facility means any institutional, commercial, public, industrial, or residential structure, installation, or building (including any structure, installation, or building containing condominiums or individual dwelling units operated as a residential cooperative, but excluding residential buildings having four or fewer dwelling units); any ship; and any active or inactive waste disposal site. For purposes of this definition, any building, structure, or installation that contains a loft used as a dwelling is not considered a residential structure, installation, or building. Any structure, installation or building that was previously subject to this subpart is not excluded, regardless of its current use or function.

Facility component means any part of a facility including equipment.

Friable asbestos material means any material containing more than 1 percent asbestos as determined using the method specified in appendix E, subpart E, 40 CFR part 763, section 1, Polarized Light Microscopy, that, when dry, can be crumbled, pulverized, or reduced to powder by hand pressure. If the asbestos content is less than 10 percent as determined by a method other than point counting by polarized light microscopy (PLM), verify the asbestos content by point counting using PLM.

Fugitive source means any source of emissions not controlled by an air pollution control device.

Glove bag means a sealed compartment with attached inner gloves used for the handling of asbestos-containing materials. Properly installed and used, glove bags provide a small work area enclosure typically used for small-scale asbestos stripping operations. Information on glove-bag installation, equipment and supplies, and work practices is contained in the Occupational Safety and Health Administration's (OSHA's) final rule on occupational exposure to asbestos (appendix G to 29 CFR 1926.58).

Grinding means to reduce to powder or small fragments and includes mechanical chipping or drilling.

In poor condition means the binding of the material is losing its integrity as indicated by peeling, cracking, or crumbling of the material.

Inactive waste disposal site means any disposal site or portion of it where additional asbestos-containing waste material has not been deposited within the past year.

Installation means any building or structure or any group of buildings or structures at a single demolition or renovation site that are under the control of the same owner or operator (or owner or operator under common control).

Leak-tight means that solids or liquids cannot escape or spill out. It also means dust-tight.

Malfunction means any sudden and unavoidable failure of air pollution control equipment or process equipment or of a process to operate in a normal or usual manner so that emissions of asbestos are increased. Failures of equipment shall not be considered malfunctions if they are caused in any way by poor maintenance, careless operation, or any other preventable upset conditions, equipment breakdown, or process failure.

Manufacturing means the combining of commercial asbestos—or, in the case of woven friction products, the combining of textiles containing commercial asbestos—with any other material(s), including commercial asbestos, and the processing of this combination into a product. Chlorine production is considered a part of manufacturing.

Natural barrier means a natural object that effectively precludes or deters access. Natural barriers include physical obstacles such as cliffs, lakes or other large bodies of water, deep and wide ravines, and mountains. Remoteness by itself is not a natural barrier.

Nonfriable asbestos-containing material means any material containing more than 1 percent asbestos as determined using the method specified in appendix E, subpart E, 40 CFR part 763, section 1, Polarized Light Microscopy, that, when dry, cannot be crumbled, pulverized, or reduced to powder by hand pressure.

Nonscheduled renovation operation means a renovation operation necessitated by the routine failure of equipment, which is expected to occur within a given period based on past operating experience, but for which an exact date cannot be predicted.

Outside air means the air outside buildings and structures, including, but not limited to, the air under a bridge or in an open air ferry dock.

Owner or operator of a demolition or renovation activity means any person who owns, leases, operates, controls, or supervises the facility being demolished or renovated or any person who owns, leases, operates, controls, or supervises the demolition or renovation operation, or both.

Particulate asbestos material means finely divided particles of asbestos or material containing asbestos.

Planned renovation operations means a renovation operation, or a number of such operations, in which some RACM will be removed or stripped within a given period of time and that can be predicted. Individual nonscheduled operations are included if a number of such operations can be predicted to occur during a given period of time based on operating experience.

Regulated asbestos-containing material (RACM) means (a) Friable asbestos material, (b) Category I nonfriable ACM that has become friable, (c) Category I nonfriable ACM that will be or has been subjected to sanding, grinding, cutting, or abrading, or (d) Category II nonfriable ACM that has a high probability of becoming or has become crumbled, pulverized, or reduced to powder by the forces expected to act on the material in the course of demolition or renovation operations regulated by this subpart.

Remove means to take out RACM or facility components that contain or are covered with RACM from any facility.

Renovation means altering a facility or one or more facility components in any way, including the stripping or removal of RACM from a facility component. Operations in which load-supporting structural members are wrecked or taken out are demolitions.

Resilient floor covering means asbestos-containing floor tile, including asphalt and vinyl floor tile, and sheet

vinyl floor covering containing more than 1 percent asbestos as determined using polarized light microscopy according to the method specified in appendix E, subpart E, 40 CFR part 763, section 1, Polarized Light Microscopy.

Roadways means surfaces on which vehicles travel. This term includes public and private highways, roads, streets, parking areas, and driveways.

Strip means to take off RACM from any part of a facility or facility components.

Structural member means any load-supporting member of a facility, such as beams and load supporting walls; or any nonload-supporting member, such as ceilings and nonload-supporting walls.

Visible emissions means any emissions, which are visually detectable without the aid of instruments, coming from RACM or asbestos-containing waste material, or from any asbestos milling, manufacturing, or fabricating operation. This does not include condensed, uncombined water vapor.

Waste generator means any owner or operator of a source covered by this subpart whose act or process produces asbestos-containing waste material.

Waste shipment record means the shipping document, required to be originated and signed by the waste generator, used to track and substantiate the disposition of asbestos-containing waste material.

Working day means Monday through Friday and includes holidays that fall on any of the days Monday through Friday.

[49 FR 13661, Apr. 5, 1984; 49 FR 25453, June 21, 1984, as amended by 55 FR 48414, Nov. 20, 1990; 56 FR 1669, Jan. 16, 1991; 60 FR 31920, June 19, 1995]

§ 61.142 Standard for asbestos mills.

(a) Each owner or operator of an asbestos mill shall either discharge no visible emissions to the outside air from that asbestos mill, including fugitive sources, or use the methods specified by § 61.152 to clean emissions containing particulate asbestos material before they escape to, or are vented to, the outside air.

(b) Each owner or operator of an asbestos mill shall meet the following requirements:

(1) Monitor each potential source of asbestos emissions from any part of the mill facility, including air cleaning devices, process equipment, and buildings that house equipment for material processing and handling, at least once each day, during daylight hours, for visible emissions to the outside air during periods of operation. The monitoring shall be by visual observation of at least 15 seconds duration per source of emissions.

(2) Inspect each air cleaning device at least once each week for proper operation and for changes that signal the potential for malfunction, including, to the maximum extent possible without dismantling other than opening the device, the presence of tears, holes, and abrasions in filter bags and for dust deposits on the clean side of bags. For air cleaning devices that cannot be inspected on a weekly basis according to this paragraph, submit to the Administrator, and revise as necessary, a written maintenance plan to include, at a minimum, the following:

(i) Maintenance schedule.

(ii) Recordkeeping plan.

(3) Maintain records of the results of visible emissions monitoring and air cleaning device inspections using a format similar to that shown in Figures 1 and 2 and include the following:

(i) Date and time of each inspection.

(ii) Presence or absence of visible emissions.

(iii) Condition of fabric filters, including presence of any tears, holes, and abrasions.

(iv) Presence of dust deposits on clean side of fabric filters.

(v) Brief description of corrective actions taken, including date and time.

(vi) Daily hours of operation for each air cleaning device.

(4) Furnish upon request, and make available at the affected facility during normal business hours for inspection by the Administrator, all records required under this section.

(5) Retain a copy of all monitoring and inspection records for at least 2 years.

(6) Submit semiannually a copy of visible emission monitoring records to the Administrator if visible emissions occurred during the report period.

Semiannual reports shall be post-marked by the 30th day following the end of the six-month period.

Date of inspection (mo/day/yr)	Time of inspection (a.m./p.m.)	Air cleaning device or fugitive source designation or number	Visible emissions observed (yes/no), corrective action taken	Daily operating hours	Inspector's initials

Figure 1. Record of Visible Emission Monitoring

1. Air cleaning device designation or number _____

2. Date of inspection _____ _____ _____ _____

3. Time of inspection _____ _____ _____ _____

4. Is air cleaning device operating properly (yes/no) _____ _____ _____ _____

5. Tears, holes, or abrasions in fabric filter (yes/no) _____ _____ _____ _____

6. Dust on clean side of fabric filters (yes/no) _____ _____ _____ _____

7. Other signs of malfunctions or potential malfunctions (yes/no) _____ _____ _____ _____

8. Describe other malfunctions or signs of potential malfunctions. _____

_____

_____

9. Describe corrective action(s) taken. _____

_____

_____

10. Date and time corrective action taken _____ _____ _____ _____

11. Inspected by

(Print/Type Name)	(Title)	(Signature)	(Date)
(Print/Type Name)	(Title)	(Signature)	(Date)

Figure 2. Air Cleaning Device Inspection Checklist

[55 FR 48416, Nov. 20, 1990, as amended at 64 FR 7467, Feb. 12, 1999]

§ 61.143 Standard for roadways.

No person may construct or maintain a roadway with asbestos tailings or asbestos-containing waste material on that roadway, unless, for asbestos tailings.

(a) It is a temporary roadway on an area of asbestos ore deposits (asbestos mine): or

(b) It is a temporary roadway at an active asbestos mill site and is encapsulated with a resinous or bituminous

binder. The encapsulated road surface must be maintained at a minimum frequency of once per year to prevent dust emissions; or

(c) It is encapsulated in asphalt concrete meeting the specifications contained in section 401 of Standard Specifications for Construction of Roads and Bridges on Federal Highway Projects, FP–85, 1985, or their equivalent.

[55 FR 48419, Nov. 20, 1990; 56 FR 1669, Jan. 16, 1991]

§61.144 Standard for manufacturing.

(a) *Applicability*. This section applies to the following manufacturing operations using commercial asbestos.

(1) The manufacture of cloth, cord, wicks, tubing, tape, twine, rope, thread, yarn, roving, lap, or other textile materials.

(2) The manufacture of cement products.

(3) The manufacture of fireproofing and insulating materials.

(4) The manufacture of friction products.

(5) The manufacture of paper, millboard, and felt.

(6) The manufacture of floor tile.

(7) The manufacture of paints, coatings, caulks, adhesives, and sealants.

(8) The manufacture of plastics and rubber materials.

(9) The manufacture of chlorine utilizing asbestos diaphragm technology.

(10) The manufacture of shotgun shell wads.

(11) The manufacture of asphalt concrete.

(b) *Standard*. Each owner or operator of any of the manufacturing operations to which this section applies shall either:

(1) Discharge no visible emissions to the outside air from these operations or from any building or structure in which they are conducted or from any other fugitive sources; or

(2) Use the methods specified by §61.152 to clean emissions from these operations containing particulate asbestos material before they escape to, or are vented to, the outside air.

(3) Monitor each potential source of asbestos emissions from any part of the manufacturing facility, including air cleaning devices, process equipment, and buildings housing material processing and handling equipment, at least once each day during daylight hours for visible emissions to the outside air during periods of operation. The monitoring shall be by visual observation of at least 15 seconds duration per source of emissions.

(4) Inspect each air cleaning device at least once each week for proper operation and for changes that signal the potential for malfunctions, including, to the maximum extent possible without dismantling other than opening the device, the presence of tears, holes, and abrasions in filter bags and for dust deposits on the clean side of bags. For air cleaning devices that cannot be inspected on a weekly basis according to this paragraph, submit to the Administrator, and revise as necessary, a written maintenance plan to include, at a minimum, the following:

(i) Maintenance schedule.

(ii) Recordkeeping plan.

(5) Maintain records of the results of visible emission monitoring and air cleaning device inspections using a format similar to that shown in Figures 1 and 2 and include the following.

(i) Date and time of each inspection.

(ii) Presence or absence of visible emissions.

(iii) Condition of fabric filters, including presence of any tears, holes and abrasions.

(iv) Presence of dust deposits on clean side of fabric filters.

(v) Brief description of corrective actions taken, including date and time.

(vi) Daily hours of operation for each air cleaning device.

(6) Furnish upon request, and make available at the affected facility during normal business hours for inspection by the Administrator, all records required under this section.

(7) Retain a copy of all monitoring and inspection records for at least 2 years.

(8) Submit semiannually a copy of the visible emission monitoring records to the Administrator if visible emission occurred during the report period. Semiannual reports shall be postmarked by the 30th day following the end of the six-month period.

[49 FR 13661, Apr. 5, 1984, as amended at 55 FR 48419, Nov. 20, 1990; 56 FR 1669, Jan. 16, 1991; 64 FR 7467, Feb. 12, 1999]

§ 61.145 Standard for demolition and renovation.

(a) *Applicability*. To determine which requirements of paragraphs (a), (b), and (c) of this section apply to the owner or operator of a demolition or renovation activity and prior to the commencement of the demolition or renovation, thoroughly inspect the affected facility or part of the facility where the demolition or renovation operation will occur for the presence of asbestos, including Category I and Category II nonfriable ACM. The requirements of paragraphs (b) and (c) of this section apply to each owner or operator of a demolition or renovation activity, including the removal of RACM as follows:

(1) In a facility being demolished, all the requirements of paragraphs (b) and (c) of this section apply, except as provided in paragraph (a)(3) of this section, if the combined amount of RACM is

(i) At least 80 linear meters (260 linear feet) on pipes or at least 15 square meters (160 square feet) on other facility components, or

(ii) At least 1 cubic meter (35 cubic feet) off facility components where the length or area could not be measured previously.

(2) In a facility being demolished, only the notification requirements of paragraphs (b)(1), (2), (3)(i) and (iv), and (4)(i) through (vii) and (4)(ix) and (xvi) of this section apply, if the combined amount of RACM is

(i) Less than 80 linear meters (260 linear feet) on pipes and less than 15 square meters (160 square feet) on other facility components, and

(ii) Less than one cubic meter (35 cubic feet) off facility components where the length or area could not be measured previously or there is no asbestos.

(3) If the facility is being demolished under an order of a State or local government agency, issued because the facility is structurally unsound and in danger of imminent collapse, only the requirements of paragraphs (b)(1), (b)(2), (b)(3)(iii), (b)(4) (except (b)(4)(viii)), (b)(5), and (c)(4) through (c)(9) of this section apply.

(4) In a facility being renovated, including any individual nonscheduled renovation operation, all the requirements of paragraphs (b) and (c) of this section apply if the combined amount of RACM to be stripped, removed, dislodged, cut, drilled, or similarly disturbed is

(i) At least 80 linear meters (260 linear feet) on pipes or at least 15 square meters (160 square feet) on other facility components, or

(ii) At least 1 cubic meter (35 cubic feet) off facility components where the length or area could not be measured previously.

(iii) To determine whether paragraph (a)(4) of this section applies to planned renovation operations involving individual nonscheduled operations, predict the combined additive amount of RACM to be removed or stripped during a calendar year of January 1 through December 31.

(iv) To determine whether paragraph (a)(4) of this section applies to emergency renovation operations, estimate the combined amount of RACM to be removed or stripped as a result of the sudden, unexpected event that necessitated the renovation.

(5) Owners or operators of demolition and renovation operations are exempt from the requirements of §§61.05(a), 61.07, and 61.09.

(b) *Notification requirements*. Each owner or operator of a demolition or renovation activity to which this section applies shall:

(1) Provide the Administrator with written notice of intention to demolish or renovate. Delivery of the notice by U.S. Postal Service, commercial delivery service, or hand delivery is acceptable.

(2) Update notice, as necessary, including when the amount of asbestos affected changes by at least 20 percent.

(3) Postmark or deliver the notice as follows:

(i) At least 10 working days before asbestos stripping or removal work or any other activity begins (such as site preparation that would break up, dislodge or similarly disturb asbestos material), if the operation is described in paragraphs (a) (1) and (4) (except (a)(4)(iii) and (a)(4)(iv)) of this section. If the operation is as described in paragraph (a)(2) of this section, notification

is required 10 working days before demolition begins.

(ii) At least 10 working days before the end of the calendar year preceding the year for which notice is being given for renovations described in paragraph (a)(4)(iii) of this section.

(iii) As early as possible before, but not later than, the following working day if the operation is a demolition ordered according to paragraph (a)(3) of this section or, if the operation is a renovation described in paragraph (a)(4)(iv) of this section.

(iv) For asbestos stripping or removal work in a demolition or renovation operation, described in paragraphs (a) (1) and (4) (except (a)(4)(iii) and (a)(4)(iv)) of this section, and for a demolition described in paragraph (a)(2) of this section, that will begin on a date other than the one contained in the original notice, notice of the new start date must be provided to the Administrator as follows:

(A) When the asbestos stripping or removal operation or demolition operation covered by this paragraph will begin after the date contained in the notice,

(*1*) Notify the Administrator of the new start date by telephone as soon as possible before the original start date, and

(*2*) Provide the Administrator with a written notice of the new start date as soon as possible before, and no later than, the original start date. Delivery of the updated notice by the U.S. Postal Service, commercial delivery service, or hand delivery is acceptable.

(B) When the asbestos stripping or removal operation or demolition operation covered by this paragraph will begin on a date earlier than the original start date,

(*1*) Provide the Administrator with a written notice of the new start date at least 10 working days before asbestos stripping or removal work begins.

(*2*) For demolitions covered by paragraph (a)(2) of this section, provide the Administrator written notice of a new start date at least 10 working days before commencement of demolition. Delivery of updated notice by U.S. Postal Service, commercial delivery service, or hand delivery is acceptable.

(C) In no event shall an operation covered by this paragraph begin on a date other than the date contained in the written notice of the new start date.

(4) Include the following in the notice:

(i) An indication of whether the notice is the original or a revised notification.

(ii) Name, address, and telephone number of both the facility owner and operator and the asbestos removal contractor owner or operator.

(iii) Type of operation: demolition or renovation.

(iv) Description of the facility or affected part of the facility including the size (square meters [square feet] and number of floors), age, and present and prior use of the facility.

(v) Procedure, including analytical methods, employed to detect the presence of RACM and Category I and Category II nonfriable ACM.

(vi) Estimate of the approximate amount of RACM to be removed from the facility in terms of length of pipe in linear meters (linear feet), surface area in square meters (square feet) on other facility components, or volume in cubic meters (cubic feet) if off the facility components. Also, estimate the approximate amount of Category I and Category II nonfriable ACM in the affected part of the facility that will not be removed before demolition.

(vii) Location and street address (including building number or name and floor or room number, if appropriate), city, county, and state, of the facility being demolished or renovated.

(viii) Scheduled starting and completion dates of asbestos removal work (or any other activity, such as site preparation that would break up, dislodge, or similarly disturb asbestos material) in a demolition or renovation; planned renovation operations involving individual nonscheduled operations shall only include the beginning and ending dates of the report period as described in paragraph (a)(4)(iii) of this section.

(ix) Scheduled starting and completion dates of demolition or renovation.

(x) Description of planned demolition or renovation work to be performed

and method(s) to be employed, including demolition or renovation techniques to be used and description of affected facility components.

(xi) Description of work practices and engineering controls to be used to comply with the requirements of this subpart, including asbestos removal and waste-handling emission control procedures.

(xii) Name and location of the waste disposal site where the asbestos-containing waste material will be deposited.

(xiii) A certification that at least one person trained as required by paragraph (c)(8) of this section will supervise the stripping and removal described by this notification. This requirement shall become effective 1 year after promulgation of this regulation.

(xiv) For facilities described in paragraph (a)(3) of this section, the name, title, and authority of the State or local government representative who has ordered the demolition, the date that the order was issued, and the date on which the demolition was ordered to begin. A copy of the order shall be attached to the notification.

(xv) For emergency renovations described in paragraph (a)(4)(iv) of this section, the date and hour that the emergency occurred, a description of the sudden, unexpected event, and an explanation of how the event caused an unsafe condition, or would cause equipment damage or an unreasonable financial burden.

(xvi) Description of procedures to be followed in the event that unexpected RACM is found or Category II nonfriable ACM becomes crumbled, pulverized, or reduced to powder.

(xvii) Name, address, and telephone number of the waste transporter.

(5) The information required in paragraph (b)(4) of this section must be reported using a form similiar to that shown in Figure 3.

(c) *Procedures for asbestos emission control.* Each owner or operator of a demolition or renovation activity to whom this paragraph applies, according to paragraph (a) of this section, shall comply with the following procedures:

(1) Remove all RACM from a facility being demolished or renovated before any activity begins that would break up, dislodge, or similarly disturb the material or preclude access to the material for subsequent removal. RACM need not be removed before demolition if:

(i) It is Category I nonfriable ACM that is not in poor condition and is not friable.

(ii) It is on a facility component that is encased in concrete or other similarly hard material and is adequately wet whenever exposed during demolition; or

(iii) It was not accessible for testing and was, therefore, not discovered until after demolition began and, as a result of the demolition, the material cannot be safely removed. If not removed for safety reasons, the exposed RACM and any asbestos-contaminated debris must be treated as asbestos-containing waste material and adequately wet at all times until disposed of.

(iv) They are Category II nonfriable ACM and the probability is low that the materials will become crumbled, pulverized, or reduced to powder during demolition.

(2) When a facility component that contains, is covered with, or is coated with RACM is being taken out of the facility as a unit or in sections:

(i) Adequately wet all RACM exposed during cutting or disjoining operations; and

(ii) Carefully lower each unit or section to the floor and to ground level, not dropping, throwing, sliding, or otherwise damaging or disturbing the RACM.

(3) When RACM is stripped from a facility component while it remains in place in the facility, adequately wet the RACM during the stripping operation.

(i) In renovation operations, wetting is not required if:

(A) The owner or operator has obtained prior written approval from the Administrator based on a written application that wetting to comply with this paragraph would unavoidably damage equipment or present a safety hazard; and

(B) The owner or operator uses of the following emission control methods:

(*1*) A local exhaust ventilation and collection system designed and operated to capture the particulate asbestos material produced by the stripping and removal of the asbestos materials. The system must exhibit no visible emissions to the outside air or be designed and operated in accordance with the requirements in §61.152.

(*2*) A glove-bag system designed and operated to contain the particulate asbestos material produced by the stripping of the asbestos materials.

(*3*) Leak-tight wrapping to contain all RACM prior to dismantlement.

(ii) In renovation operations where wetting would result in equipment damage or a safety hazard, and the methods allowed in paragraph (c)(3)(i) of this section cannot be used, another method may be used after obtaining written approval from the Administrator based upon a determination that it is equivalent to wetting in controlling emissions or to the methods allowed in paragraph (c)(3)(i) of this section.

(iii) A copy of the Administrator's written approval shall be kept at the worksite and made available for inspection.

(4) After a facility component covered with, coated with, or containing RACM has been taken out of the facility as a unit or in sections pursuant to paragraph (c)(2) of this section, it shall be stripped or contained in leak-tight wrapping, except as described in paragraph (c)(5) of this section. If stripped, either:

(i) Adequately wet the RACM during stripping; or

(ii) Use a local exhaust ventilation and collection system designed and operated to capture the particulate asbestos material produced by the stripping. The system must exhibit no visible emissions to the outside air or be designed and operated in accordance with the requirements in §61.152.

(5) For large facility components such as reactor vessels, large tanks, and steam generators, but not beams (which must be handled in accordance with paragraphs (c)(2), (3), and (4) of this section), the RACM is not required to be stripped if the following requirements are met:

(i) The component is removed, transported, stored, disposed of, or reused without disturbing or damaging the RACM.

(ii) The component is encased in a leak-tight wrapping.

(iii) The leak-tight wrapping is labeled according to §61.149(d)(1)(i), (ii), and (iii) during all loading and unloading operations and during storage.

(6) For all RACM, including material that has been removed or stripped:

(i) Adequately wet the material and ensure that it remains wet until collected and contained or treated in preparation for disposal in accordance with §61.150; and

(ii) Carefully lower the material to the ground and floor, not dropping, throwing, sliding, or otherwise damaging or disturbing the material.

(iii) Transport the material to the ground via leak-tight chutes or containers if it has been removed or stripped more than 50 feet above ground level and was not removed as units or in sections.

(iv) RACM contained in leak-tight wrapping that has been removed in accordance with paragraphs (c)(4) and (c)(3)(i)(B)(*3*) of this section need not be wetted.

(7) When the temperature at the point of wetting is below 0 °C (32 °F):

(i) The owner or operator need not comply with paragraph (c)(2)(i) and the wetting provisions of paragraph (c)(3) of this section.

(ii) The owner or operator shall remove facility components containing, coated with, or covered with RACM as units or in sections to the maximum extent possible.

(iii) During periods when wetting operations are suspended due to freezing temperatures, the owner or operator must record the temperature in the area containing the facility components at the beginning, middle, and end of each workday and keep daily temperature records available for inspection by the Administrator during normal business hours at the demolition or renovation site. The owner or operator shall retain the temperature records for at least 2 years.

(8) Effective 1 year after promulgation of this regulation, no RACM shall

be stripped, removed, or otherwise handled or disturbed at a facility regulated by this section unless at least one on-site representative, such as a foreman or management-level person or other authorized representative, trained in the provisions of this regulation and the means of complying with them, is present. Every 2 years, the trained on-site individual shall receive refresher training in the provisions of this regulation. The required training shall include as a minimum: applicability; notifications; material identification; control procedures for removals including, at least, wetting, local exhaust ventilation, negative pressure enclosures, glove-bag procedures, and High Efficiency Particulate Air (HEPA) filters; waste disposal work practices; reporting and recordkeeping; and asbestos hazards and worker protection. Evidence that the required training has been completed shall be posted and made available for inspection by the Administrator at the demolition or renovation site.

(9) For facilities described in paragraph (a)(3) of this section, adequately wet the portion of the facility that contains RACM during the wrecking operation.

(10) If a facility is demolished by intentional burning, all RACM including Category I and Category II nonfriable ACM must be removed in accordance with the NESHAP before burning.

NOTIFICATION OF DEMOLITION AND RENOVATION

Operator Project #	Postmark	Date Received	Notification #

I. TYPE OF NOTIFICATION (O=Original R=Revised C=Cancelled):

II. FACILITY INFORMATION (Identify owner, removal contractor, and other operator)

OWNER NAME:		
Address:		
City:	State:	Zip:
Contact:		Tel:
REMOVAL CONTRACTOR:		
Address:		
City:	State:	Zip:
Contact:		Tel:
OTHER OPERATOR:		
Address:		
City:	State:	Zip:
Contact:		Tel:

III. TYPE OF OPERATION (D=Demo O=Ordered Demo R=Renovation E=Emer.Renovation):

IV. IS ASBESTOS PRESENT? (Yes/No)

V. FACILITY DESCRIPTION (Include building name, number and floor or room number)

Bldg Name:		
Address:		
City:	State:	County:
Site Location:		
Building Size:	# of Floors:	Age in Years:
Present Use:	Prior Use:	

VI. PROCEDURE, INCLUDING ANALYTICAL METHOD, IF APPROPRIATE, USED TO DETECT THE PRESENCE OF ASBESTOS MATERIAL:

VII. APPROXIMATE AMOUNT OF ASBESTOS, INCLUDING: 1. Regulated ACM to be removed 2. Category I ACM Not Removed 3. Category II ACM Not Removed	RACM To Be Removed	Nonfriable Asbestos Material Not To Be Removed		Indicate Unit of Measurement Below	
		Cat I	Cat II	UNIT	
Pipes				LnFt:	Ln m:
Surface Area				SqFt:	Sq m:
Vol RACM Off Facility Component				CuFt:	Cu m:

VIII. SCHEDULED DATES ASBESTOS REMOVAL (MM/DD/YY) Start: Complete:

IX. SCHEDULED DATES DEMO/RENOVATION (MM/DD/YY) Start: Complete:

Continued on page two

Figure 3. Notification of Demolition and Renovation

NOTIFICATION OF DEMOLITION AND RENOVATION (continued)

X. DESCRIPTION OF PLANNED DEMOLITION OR RENOVATION WORK, AND METHOD(S) TO BE USED:		
XI. DESCRIPTION OF WORK PRACTICES AND ENGINEERING CONTROLS TO BE USED TO PREVENT EMISSIONS OF ASBESTOS AT THE DEMOLITION AND RENOVATION SITE:		
XII. WASTE TRANSPORTER #1		
Name:		
Address		
City:	State:	Zip:
Contact Person:		Telephone:
WASTE TRANSPORTER #2		
Name:		
Address:		
City:	State:	Zip:
Contact Person:		Telephone:
XIII. WASTE DISPOSAL SITE		
Name:		
Location:		
City:	State:	Zip:
Telephone:		
XIV. IF DEMOLITION ORDERED BY A GOVERNMENT AGENCY, PLEASE IDENTIFY THE AGENCY BELOW:		
Name:	Title:	
Authority:		
Date of Order (MM/DD/YY):	Date Ordered to Begin (MM/DD/YY):	
XV. FOR EMERGENCY RENOVATIONS		
Date and Hour of Emergency (MM/DD/YY):		
Description of the Sudden, Unexpected Event:		
Explanation of how the event caused unsafe conditions or would cause equipment damage or an unreasonable financial burden:		
XVI. DESCRIPTION OF PROCEDURES TO BE FOLLOWED IN THE EVENT THAT UNEXPECTED ASBESTOS IS FOUND OR PREVIOUSLY NONFRIABLE ASBESTOS MATERIAL BECOMES CRUMBLED, PULVERIZED, OR REDUCED TO POWDER.		
XVI. I CERTIFY THAT AN INDIVIDUAL TRAINED IN THE PROVISIONS OF THIS REGULATION (40 CFR PART 61, SUBPART M) WILL BE ON-SITE DURING THE DEMOLITION OR RENOVATION AND EVIDENC THAT THE REQUIRED TRAINING HAS BEEN ACCOMPLISHED BY THIS PERSON WILL BE AVAILABLE FOR INSPECTION DURING NORMAL BUSINESS HOURS. (Required 1 year after promulgation)		
	(Signature of Owner/Operator)	(Date)
XVII. I CERTIFY THAT THE ABOVE INFORMATION IS CORRECT.		
	(Signature of Owner/Operator)	(Date)

Figure 3. Notification of Demolition and Renovation

[55 FR 48419, Nov. 20, 1990; 56 FR 1669, Jan. 16, 1991]

§ 61.146 Standard for spraying.

The owner or operator of an operation in which asbestos-containing materials are spray applied shall comply with the following requirements:

(a) For spray-on application on buildings, structures, pipes, and conduits, do not use material containing more than 1 percent asbestos as determined using the method specified in appendix E, subpart E, 40 CFR part 763, section 1,

Polarized Light Microscopy, except as provided in paragraph (c) of this section.

(b) For spray-on application of materials that contain more than 1 percent asbestos as determined using the method specified in appendix E, subpart E, 40 CFR part 763, section 1, Polarized Light Microscopy, on equipment and machinery, except as provided in paragraph (c) of this section:

(1) Notify the Administrator at least 20 days before beginning the spraying operation. Include the following information in the notice:

(i) Name and address of owner or operator.

(ii) Location of spraying operation.

(iii) Procedures to be followed to meet the requirements of this paragraph.

(2) Discharge no visible emissions to the outside air from spray-on application of the asbestos-containing material or use the methods specified by §61.152 to clean emissions containing particulate asbestos material before they escape to, or are vented to, the outside air.

(c) The requirements of paragraphs (a) and (b) of this section do not apply to the spray-on application of materials where the asbestos fibers in the materials are encapsulated with a bituminous or resinous binder during spraying and the materials are not friable after drying.

(d) Owners or operators of sources subject to this paragraph are exempt from the requirements of §§61.05(a), 61.07 and 61.09.

[49 FR 13661, Apr. 5, 1984. Redesignated and amended at 55 FR 48424, Nov. 20, 1990; 60 FR 31920, June 19, 1995]

§61.147 Standard for fabricating.

(a) *Applicability*. This section applies to the following fabricating operations using commercial asbestos:

(1) The fabrication of cement building products.

(2) The fabrication of friction products, except those operations that primarily install asbestos friction materials on motor vehicles.

(3) The fabrication of cement or silicate board for ventilation hoods; ovens; electrical panels; laboratory furniture, bulkheads, partitions, and ceilings for marine construction; and flow control devices for the molten metal industry.

(b) *Standard.* Each owner or operator of any of the fabricating operations to which this section applies shall either:

(1) Discharge no visible emissions to the outside air from any of the operations or from any building or structure in which they are conducted or from any other fugitive sources; or

(2) Use the methods specified by §61.152 to clean emissions containing particulate asbestos material before they escape to, or are vented to, the outside air.

(3) Monitor each potential source of asbestos emissions from any part of the fabricating facility, including air cleaning devices, process equipment, and buildings that house equipment for material processing and handling, at least once each day, during daylight hours, for visible emissions to the outside air during periods of operation. The monitoring shall be by visual observation of at least 15 seconds duration per source of emissions.

(4) Inspect each air cleaning device at least once each week for proper operation and for changes that signal the potential for malfunctions, including, to the maximum extent possible without dismantling other than opening the device, the presence of tears, holes, and abrasions in filter bags and for dust deposits on the clean side of bags. For air cleaning devices that cannot be inspected on a weekly basis according to this paragraph, submit to the Administrator, and revise as necessary, a written maintenance plan to include, at a minimum, the following:

(i) Maintenance schedule.

(ii) Recordkeeping plan.

(5) Maintain records of the results of visible emission monitoring and air cleaning device inspections using a format similar to that shown in Figures 1 and 2 and include the following:

(i) Date and time of each inspection.

(ii) Presence or absence of visible emissions.

(iii) Condition of fabric filters, including presence of any tears, holes, and abrasions.

(iv) Presence of dust deposits on clean side of fabric filters.

(v) Brief description of corrective actions taken, including date and time.

(vi) Daily hours of operation for each air cleaning device.

(6) Furnish upon request and make available at the affected facility during normal business hours for inspection by the Administrator, all records required under this section.

(7) Retain a copy of all monitoring and inspection records for at least 2 years.

(8) Submit semiannually a copy of the visible emission monitoring records to the Administrator if visible emission occurred during the report period. Semiannual reports shall be postmarked by the 30th day following the end of the six-month period.

[49 FR 13661, Apr. 5, 1984. Redesignated and amended at 55 FR 48424, Nov. 20, 1991; 64 FR 7467, Feb. 12, 1999]

§ 61.148 Standard for insulating materials.

No owner or operator of a facility may install or reinstall on a facility component any insulating materials that contain commercial asbestos if the materials are either molded and friable or wet-applied and friable after drying. The provisions of this section do not apply to spray-applied insulating materials regulated under § 61.146.

[55 FR 48424, Nov. 20, 1990]

§ 61.149 Standard for waste disposal for asbestos mills.

Each owner or operator of any source covered under the provisions of § 61.142 shall:

(a) Deposit all asbestos-containing waste material at a waste disposal site operated in accordance with the provisions of § 61.154; and

(b) Discharge no visible emissions to the outside air from the transfer of control device asbestos waste to the tailings conveyor, or use the methods specified by § 61.152 to clean emissions containing particulate asbestos material before they escape to, or are vented to, the outside air. Dispose of the asbestos waste from control devices in accordance with § 61.150(a) or paragraph (c) of this section; and

(c) Discharge no visible emissions to the outside air during the collection, processing, packaging, or on-site transporting of any asbestos-containing waste material, or use one of the disposal methods specified in paragraphs (c) (1) or (2) of this section, as follows:

(1) Use a wetting agent as follows:

(i) Adequately mix all asbestos-containing waste material with a wetting agent recommended by the manufacturer of the agent to effectively wet dust and tailings, before depositing the material at a waste disposal site. Use the agent as recommended for the particular dust by the manufacturer of the agent.

(ii) Discharge no visible emissions to the outside air from the wetting operation or use the methods specified by § 61.152 to clean emissions containing particulate asbestos material before they escape to, or are vented to, the outside air.

(iii) Wetting may be suspended when the ambient temperature at the waste disposal site is less than −9.5 °C (15 °F), as determined by an appropriate measurement method with an accuracy of ±1 °C (±2 °F). During periods when wetting operations are suspended, the temperature must be recorded at least at hourly intervals, and records must be retained for at least 2 years in a form suitable for inspection.

(2) Use an alternative emission control and waste treatment method that has received prior written approval by the Administrator. To obtain approval for an alternative method, a written application must be submitted to the Administrator demonstrating that the following criteria are met:

(i) The alternative method will control asbestos emissions equivalent to currently required methods.

(ii) The suitability of the alternative method for the intended application.

(iii) The alternative method will not violate other regulations.

(iv) The alternative method will not result in increased water pollution, land pollution, or occupational hazards.

(d) When waste is transported by vehicle to a disposal site:

(1) Mark vehicles used to transport asbestos-containing waste material during the loading and unloading of the waste so that the signs are visible. The markings must:

(i) Be displayed in such a manner and location that a person can easily read the legend.

(ii) Conform to the requirements for 51 cm × 36 cm (20 in × 14 in) upright format signs specified in 29 CFR 1910.145(d)(4) and this paragraph; and

(iii) Display the following legend in the lower panel with letter sizes and styles of a visibility at least equal to those specified in this paragraph.

Legend	
DANGER	
ASBESTOS DUST HAZARD	
CANCER AND LUNG DISEASE HAZARD	
Authorized Personnel Only	
Notation	
2.5 cm (1 inch) Sans Serif, Gothic or Block	
2.5 cm (1 inch) Sans Serif, Gothic or Block	
1.9 cm (¾ inch) Sans Serif, Gothic or Block	
14 Point Gothic	

Spacing between any two lines must be a least equal to the height of the upper of the two lines.

(2) For off-site disposal, provide a copy of the waste shipment record, described in paragraph (e)(1) of this section, to the disposal site owner or operator at the same time as the asbestos-containing waste material is delivered to the disposal site.

(e) For all asbestos-containing waste material transported off the facility site:

(1) Maintain asbestos waste shipment records, using a form similar to that shown in Figure 4, and include the following information:

(i) The name, address, and telephone number of the waste generator.

(ii) The name and address of the local, State, or EPA Regional agency responsible for administering the asbestos NESHAP program.

(iii) The quantity of the asbestos-containing waste material in cubic meters (cubic yards).

(iv) The name and telephone number of the disposal site operator.

(v) The name and physical site location of the disposal site.

(vi) The date transported.

(vii) The name, address, and telephone number of the transporter(s).

(viii) A certification that the contents of this consignment are fully and accurately described by proper shipping name and are classified, packed, marked, and labeled, and are in all respects in proper condition for transport by highway according to applicable international and government regulations.

(2) For waste shipments where a copy of the waste shipment record, signed by the owner or operator of the designated disposal site, is not received by the waste generator within 35 days of the date the waste was accepted by the initial transporter, contact the transporter and/or the owner or operator of the designated disposal site to determine the status of the waste shipment.

(3) Report in writing to the local, State, or EPA Regional office responsible for administering the asbestos NESHAP program for the waste generator if a copy of the waste shipment record, signed by the owner or operator of the designated waste disposal site, is not received by the waste generator within 45 days of the date the waste was accepted by the initial transporter. Include in the report the following information:

(i) A copy of the waste shipment record for which a confirmation of delivery was not received, and

(ii) A cover letter signed by the waste generator explaining the efforts taken to locate the asbestos waste shipment and the results of those efforts.

(4) Retain a copy of all waste shipment records, including a copy of the waste shipment record signed by the owner or operator of the designated waste disposal site, for at least 2 years.

(f) Furnish upon request, and make available for inspection by the Administrator, all records required under this section.

Generator	1. Work site name and mailing address	Owner's name	Owner's telephone no.
	2. Operator's name and address		Operator's telephone no.
	3. Waste disposal site (WDS) name, mailing address, and physical site location		WDS phone no.
	4. Name, and address of responsible agency		
	5. Description of materials	6. Containers No. Type	7. Total quantity m^3 (yd^3)
	8. Special handling instructions and additional information		
	9. OPERATOR'S CERTIFICATION: I hereby declare that the contents of this consignment are fully and accurately described above by proper shipping name and are classified, packed, marked, and labeled, and are in all respects in proper condition for transport by highway according to applicable international and government regulations.		
	Printed/typed name & title	Signature	Month Day Year
Transporter	10. Transporter 1 (Acknowledgment of receipt of materials)		
	Printed/typed name & title Address and telephone no.	Signature	Month Day Year
	11. Transporter 2 (Acknowledgment of receipt of materials)		
	Printed/typed name & title Address and telephone no.	Signature	Month Day Year
Disposal Site	12. Discrepancy indication space		
	13. Waste disposal site owner or operator: Certification of receipt of asbestos materials covered by this manifest except as noted in item 12.		
	Printed/typed name & title	Signature	Month Day Year

(Continued)

Figure 4. Waste Shipment Record

INSTRUCTIONS

Waste Generator Section (Items 1-9)

1. Enter the name of the facility at which asbestos waste is generated and the address where the facility is located. In the appropriate spaces, also enter the name of the owner of the facility and the owner's phone number.

2. If a demolition or renovation, enter the name and address of the company and authorized agent responsible for performing the asbestos removal. In the appropriate spaces, also enter the phone number of the operator.

3. Enter the name, address, and physical site location of the waste disposal site (WDS) that will be receiving the asbestos materials. In the appropriate spaces, also enter the phone number of the WDS. Enter "on-site" if the waste will be disposed of on the generator's property.

4. Provide the name and address of the local, State, or EPA Regional office responsible for administering the asbestos NESHAP program.

5. Indicate the types of asbestos waste materials generated. If from a demolition or renovation, indicate the amount of asbestos that is

   - Friable asbestos material
   - Nonfriable asbestos material

6. Enter the number of containers used to transport the asbestos materials listed in item 5. Also enter one of the following container codes used in transporting each type of asbestos material (specify any other type of container used if not listed below):

   DM - Metal drums, barrels
   DP - Plastic drums, barrels
   BA - 6 mil plastic bags or wrapping

7. Enter the quantities of each type of asbestos material removed in units of cubic meters (cubic yards).

8. Use this space to indicate special transportation, treatment, storage or disposal or Bill of Lading information. If an alternate waste disposal site is designated, note it here. Emergency response telephone numbers or similar information may be included here.

9. The authorized agent of the waste generator must read and then sign and date this certification. The date is the date of receipt by transporter.

NOTE: The waste generator must retain a copy of this form.

(continued)

Figure 4. Waste Shipment Record

Transporter Section (Items 10 & 11)

10. & 11. Enter name, address, and telephone number of each transporter used, if applicable. Print or type the full name and title of person accepting responsibility and acknowledging receipt of materials as listed on this waste shipment record for transport. Enter date of receipt and signature.

NOTE: The transporter must retain a copy of this form.

Disposal Site Section (Items 12 & 13)

12. The authorized representative of the WDS must note in this space any discrepancy between waste described on this manifest and waste actually received as well as any improperly enclosed or contained waste. Any rejected materials should be listed and destination of those materials provided. A site that converts asbestos-containing waste material to nonasbestos material is considered a WDS.

13. The signature (by hand) of the authorized WDS agent indicates acceptance and agreement with statements on this manifest except as noted in item 12. The date is the date of signature and receipt of shipment.

NOTE: The WDS must retain a completed copy of this form. The WDS must also send a completed copy to the operator listed in item 2.

Figure 4. Waste Shipment Record

§ 61.150 Standard for waste disposal for manufacturing, fabricating, demolition, renovation, and spraying operations.

Each owner or operator of any source covered under the provisions of §§ 61.144, 61.145, 61.146, and 61.147 shall comply with the following provisions:

(a) Discharge no visible emissions to the outside air during the collection, processing (including incineration), packaging, or transporting of any asbestos-containing waste material generated by the source, or use one of the emission control and waste treatment methods specified in paragraphs (a) (1) through (4) of this section.

(1) Adequately wet asbestos-containing waste material as follows:

(i) Mix control device asbestos waste to form a slurry; adequately wet other asbestos-containing waste material; and

(ii) Discharge no visible emissions to the outside air from collection, mixing, wetting, and handling operations, or use the methods specified by § 61.152 to clean emissions containing particulate asbestos material before they escape to, or are vented to, the outside air; and

(iii) After wetting, seal all asbestos-containing waste material in leak-tight containers while wet; or, for materials that will not fit into containers without additional breaking, put materials into leak-tight wrapping; and

(iv) Label the containers or wrapped materials specified in paragraph (a)(1)(iii) of this section using warning labels specified by Occupational Safety and Health Standards of the Department of Labor, Occupational Safety and Health Administration (OSHA) under 29 CFR 1910.1001(j)(2) or 1926.58(k)(2)(iii). The labels shall be printed in letters of sufficient size and contrast so as to be readily visible and legible.

(v) For asbestos-containing waste material to be transported off the facility site, label containers or wrapped materials with the name of the waste generator and the location at which the waste was generated.

(2) Process asbestos-containing waste material into nonfriable forms as follows:

(i) Form all asbestos-containing waste material into nonfriable pellets or other shapes;

(ii) Discharge no visible emissions to the outside air from collection and processing operations, including incineration, or use the method specified by §61.152 to clean emissions containing particulate asbestos material before they escape to, or are vented to, the outside air.

(3) For facilities demolished where the RACM is not removed prior to demolition according to §§61.145(c)(1) (i), (ii), (iii), and (iv) or for facilities demolished according to §61.145(c)(9), adequately wet asbestos-containing waste material at all times after demolition and keep wet during handling and loading for transport to a disposal site. Asbestos-containing waste materials covered by this paragraph do not have to be sealed in leak-tight containers or wrapping but may be transported and disposed of in bulk.

(4) Use an alternative emission control and waste treatment method that has received prior approval by the Administrator according to the procedure described in §61.149(c)(2).

(5) As applied to demolition and renovation, the requirements of paragraph (a) of this section do not apply to Category I nonfriable ACM waste and Category II nonfriable ACM waste that did not become crumbled, pulverized, or reduced to powder.

(b) All asbestos-containing waste material shall be deposited as soon as is practical by the waste generator at:

(1) A waste disposal site operated in accordance with the provisions of §61.154, or

(2) An EPA-approved site that converts RACM and asbestos-containing waste material into nonasbestos (asbestos-free) material according to the provisions of §61.155.

(3) The requirements of paragraph (b) of this section do not apply to Category I nonfriable ACM that is not RACM.

(c) Mark vehicles used to transport asbestos-containing waste material during the loading and unloading of waste so that the signs are visible. The markings must conform to the requirements of §§61.149(d)(1) (i), (ii), and (iii).

(d) For all asbestos-containing waste material transported off the facility site:

(1) Maintain waste shipment records, using a form similar to that shown in Figure 4, and include the following information:

(i) The name, address, and telephone number of the waste generator.

(ii) The name and address of the local, State, or EPA Regional office responsible for administering the asbestos NESHAP program.

(iii) The approximate quantity in cubic meters (cubic yards).

(iv) The name and telephone number of the disposal site operator.

(v) The name and physical site location of the disposal site.

(vi) The date transported.

(vii) The name, address, and telephone number of the transporter(s).

(viii) A certification that the contents of this consignment are fully and accurately described by proper shipping name and are classified, packed, marked, and labeled, and are in all respects in proper condition for transport by highway according to applicable international and government regulations.

(2) Provide a copy of the waste shipment record, described in paragraph (d)(1) of this section, to the disposal site owners or operators at the same time as the asbestos-containing waste material is delivered to the disposal site.

(3) For waste shipments where a copy of the waste shipment record, signed by the owner or operator of the designated disposal site, is not received by the waste generator within 35 days of the date the waste was accepted by the initial transporter, contact the transporter and/or the owner or operator of the designated disposal site to determine the status of the waste shipment.

(4) Report in writing to the local, State, or EPA Regional office responsible for administering the asbestos NESHAP program for the waste generator if a copy of the waste shipment record, signed by the owner or operator of the designated waste disposal site, is not received by the waste generator within 45 days of the date the waste

was accepted by the initial transporter. Include in the report the following information:

(i) A copy of the waste shipment record for which a confirmation of delivery was not received, and

(ii) A cover letter signed by the waste generator explaining the efforts taken to locate the asbestos waste shipment and the results of those efforts.

(5) Retain a copy of all waste shipment records, including a copy of the waste shipment record signed by the owner or operator of the designated waste disposal site, for at least 2 years.

(e) Furnish upon request, and make available for inspection by the Administrator, all records required under this section.

[55 FR 48429, Nov. 20, 1990; 56 FR 1669, Jan. 16, 1991]

§ 61.151 Standard for inactive waste disposal sites for asbestos mills and manufacturing and fabricating operations.

Each owner or operator of any inactive waste disposal site that was operated by sources covered under § 61.142, 61.144, or 61.147 and received deposits of asbestos-containing waste material generated by the sources, shall:

(a) Comply with one of the following:

(1) Either discharge no visible emissions to the outside air from an inactive waste disposal site subject to this paragraph; or

(2) Cover the asbestos-containing waste material with at least 15 centimeters (6 inches) of compacted nonasbestos-containing material, and grow and maintain a cover of vegetation on the area adequate to prevent exposure of the asbestos-containing waste material. In desert areas where vegetation would be difficult to maintain, at least 8 additional centimeters (3 inches) of well-graded, nonasbestos crushed rock may be placed on top of the final cover instead of vegetation and maintained to prevent emissions; or

(3) Cover the asbestos-containing waste material with at least 60 centimeters (2 feet) of compacted nonasbestos-containing material, and maintain it to prevent exposure of the asbestos-containing waste; or

(4) For inactive waste disposal sites for asbestos tailings, a resinous or petroleum-based dust suppression agent that effectively binds dust to control surface air emissions may be used instead of the methods in paragraphs (a)(1), (2), and (3) of this section. Use the agent in the manner and frequency recommended for the particular asbestos tailings by the manufacturer of the dust suppression agent to achieve and maintain dust control. Obtain prior written approval of the Administrator to use other equally effective dust suppression agents. For purposes of this paragraph, any used, spent, or other waste oil is not considered a dust suppression agent.

(b) Unless a natural barrier adequately deters access by the general public, install and maintain warning signs and fencing as follows, or comply with paragraph (a)(2) or (a)(3) of this section.

(1) Display warning signs at all entrances and at intervals of 100 m (328 ft) or less along the property line of the site or along the perimeter of the sections of the site where asbestos-containing waste material was deposited. The warning signs must:

(i) Be posted in such a manner and location that a person can easily read the legend; and

(ii) Conform to the requirements for 51 cm×36 cm (20″×14″) upright format signs specified in 29 CFR 1910.145(d)(4) and this paragraph; and

(iii) Display the following legend in the lower panel with letter sizes and styles of a visibility at least equal to those specified in this paragraph.

Legend	Notation
Asbestos Waste Disposal Site.	2.5 cm (1 inch) Sans Serif, Gothic or Block
Do Not Create Dust	1.9 cm (¾ inch) Sans Serif, Gothic or Block
Breathing Asbestos is Hazardous to Your Health.	14 Point Gothic.

Spacing between any two lines must be at least equal to the height of the upper of the two lines.

(2) Fence the perimeter of the site in a manner adequate to deter access by the general public.

(3) When requesting a determination on whether a natural barrier adequately deters public access, supply information enabling the Administrator

to determine whether a fence or a natural barrier adequately deters access by the general public.

(c) The owner or operator may use an alternative control method that has received prior approval of the Administrator rather than comply with the requirements of paragraph (a) or (b) of this section.

(d) Notify the Administrator in writing at least 45 days prior to excavating or otherwise disturbing any asbestos-containing waste material that has been deposited at a waste disposal site under this section, and follow the procedures specified in the notification. If the excavation will begin on a date other than the one contained in the original notice, notice of the new start date must be provided to the Administrator at least 10 working days before excavation begins and in no event shall excavation begin earlier than the date specified in the original notification. Include the following information in the notice:

(1) Scheduled starting and completion dates.

(2) Reason for disturbing the waste.

(3) Procedures to be used to control emissions during the excavation, storage, transport, and ultimate disposal of the excavated asbestos-containing waste material. If deemed necessary, the Administrator may require changes in the emission control procedures to be used.

(4) Location of any temporary storage site and the final disposal site.

(e) Within 60 days of a site becoming inactive and after the effective date of this subpart, record, in accordance with State law, a notation on the deed to the facility property and on any other instrument that would normally be examined during a title search; this notation will in perpetuity notify any potential purchaser of the property that:

(1) The land has been used for the disposal of asbestos-containing waste material;

(2) The survey plot and record of the location and quantity of asbestos-containing waste disposed of within the disposal site required in §61.154(f) have been filed with the Administrator; and

(3) The site is subject to 40 CFR part 61, subpart M.

[49 FR 13661, Apr. 5, 1984, as amended at 53 FR 36972, Sept. 23, 1988. Redesignated and amended at 55 FR 48429, Nov. 20, 1990]

§61.152 Air-cleaning.

(a) The owner or operator who uses air cleaning, as specified in §§61.142(a), 61.144(b)(2), 61.145(c)(3)(i)(B)(*1*), 61.145(c)(4)(ii), 61.145(c)(11)(i), 61.146(b)(2), 61.147(b)(2), 61.149(b), 61.149(c)(1)(ii), 61.150(a)(1)(ii), 61.150(a)(2)(ii), and 61.155(e) shall:

(1) Use fabric filter collection devices, except as noted in paragraph (b) of this section, doing all of the following:

(i) Ensuring that the airflow permeability, as determined by ASTM Method D737–75, does not exceed 9 $m^3/min/m^2$ (30 $ft^3/min/ft^2$) for woven fabrics or 11^3/min/m^2(35 $ft^3/min/ft^2$) for felted fabrics, except that 12 $m^3/min/m^2$ (40 ft^3min/ft^2) for woven and 14 $m^3/min/m^2$ (45 ft ^{3}min/ft^2) for felted fabrics is allowed for filtering air from asbestos ore dryers; and

(ii) Ensuring that felted fabric weighs at least 475 grams per square meter (14 ounces per square yard) and is at least 1.6 millimeters (one-sixteenth inch) thick throughout; and

(iii) Avoiding the use of synthetic fabrics that contain fill yarn other than that which is spun.

(2) Properly install, use, operate, and maintain all air-cleaning equipment authorized by this section. Bypass devices may be used only during upset or emergency conditions and then only for so long as it takes to shut down the operation generating the particulate asbestos material.

(3) For fabric filter collection devices installed after January 10, 1989, provide for easy inspection for faulty bags.

(b) There are the following exceptions to paragraph (a)(1):

(1) After January 10, 1989, if the use of fabric creates a fire or explosion hazard, or the Administrator determines that a fabric filter is not feasible, the Administrator may authorize as a substitute the use of wet collectors designed to operate with a unit contacting energy of at least 9.95 kilopascals (40 inches water gage pressure).

(2) Use a HEPA filter that is certified to be at least 99.97 percent efficient for 0.3 micron particles.

(3) The Administrator may authorize the use of filtering equipment other than described in paragraphs (a)(1) and (b)(1) and (2) of this section if the owner or operator demonstrates to the Administrator's satisfaction that it is equivalent to the described equipment in filtering particulate asbestos material.

[49 FR 13661, Apr. 5, 1984; 49 FR 25453, June 21, 1984, as amended at 51 FR 8199, Mar. 10, 1986. Redesignated and amended at 55 FR 48430, Nov. 20, 1990]

§ 61.153 Reporting.

(a) Any new source to which this subpart applies (with the exception of sources subject to §§ 61.143, 61.145, 61.146, and 61.148), which has an initial startup date preceding the effective date of this revision, shall provide the following information to the Administrator postmarked or delivered within 90 days of the effective date. In the case of a new source that does not have an initial startup date preceding the effective date, the information shall be provided, postmarked or delivered, within 90 days of the initial startup date. Any owner or operator of an existing source shall provide the following information to the Administrator within 90 days of the effective date of this subpart unless the owner or operator of the existing source has previously provided this information to the Administrator. Any changes in the information provided by any existing source shall be provided to the Administrator, postmarked or delivered, within 30 days after the change.

(1) A description of the emission control equipment used for each process; and

(i) If the fabric device uses a woven fabric, the airflow permeability in $m^3/min/m^2$ and; if the fabric is synthetic, whether the fill yarn is spun or not spun; and

(ii) If the fabric filter device uses a felted fabric, the density in g/m^2, the minimum thickness in inches, and the airflow permeability in $m^3/min/m^2$.

(2) If a fabric filter device is used to control emissions,

(i) The airflow permeability in $m^3/min/m^2$ ($ft^3/min/ft^2$) if the fabric filter device uses a woven fabric, and, if the fabric is synthetic, whether the fill yarn is spun or not spun; and

(ii) If the fabric filter device uses a felted fabric, the density in g/m^2 (oz/yd^2), the minimum thickness in millimeters (inches), and the airflow permeability in $m^3/min/m^2$ ($ft^3/min/ft^2$).

(3) If a HEPA filter is used to control emissions, the certified efficiency.

(4) For sources subject to §§ 61.149 and 61.150:

(i) A brief description of each process that generates asbestos-containing waste material; and

(ii) The average volume of asbestos-containing waste material disposed of, measured in m^3/day (yd^3/day); and

(iii) The emission control methods used in all stages of waste disposal; and

(iv) The type of disposal site or incineration site used for ultimate disposal, the name of the site operator, and the name and location of the disposal site.

(5) For sources subject to §§ 61.151 and 61.154:

(i) A brief description of the site; and

(ii) The method or methods used to comply with the standard, or alternative procedures to be used.

(b) The information required by paragraph (a) of this section must accompany the information required by § 61.10. Active waste disposal sites subject to § 61.154 shall also comply with this provision. Roadways, demolition and renovation, spraying, and insulating materials are exempted from the requirements of § 61.10(a). The information described in this section must be reported using the format of appendix A of this part as a guide.

(Sec. 114. Clean Air Act as amended (42 U.S.C. 7414))

[49 FR 13661, Apr. 5, 1984. Redesignated and amended at 55 FR 48430, Nov. 20, 1990; 56 FR 1669, Jan. 16, 1991]

§ 61.154 Standard for active waste disposal sites.

Each owner or operator of an active waste disposal site that receives asbestos-containing waste material from a source covered under § 61.149, 61.150, or 61.155 shall meet the requirements of this section:

(a) Either there must be no visible emissions to the outside air from any active waste disposal site where asbestos-containing waste material has been deposited, or the requirements of paragraph (c) or (d) of this section must be met.

(b) Unless a natural barrier adequately deters access by the general public, either warning signs and fencing must be installed and maintained as follows, or the requirements of paragraph (c)(1) of this section must be met.

(1) Warning signs must be displayed at all entrances and at intervals of 100 m (330 ft) or less along the property line of the site or along the perimeter of the sections of the site where asbestos-containing waste material is deposited. The warning signs must:

(i) Be posted in such a manner and location that a person can easily read the legend; and

(ii) Conform to the requirements of 51 cm × 36 cm (20″×14″) upright format signs specified in 29 CFR 1910.145(d)(4) and this paragraph; and

(iii) Display the following legend in the lower panel with letter sizes and styles of a visibility at least equal to those specified in this paragraph.

Legend	Notation
Asbestos Waste Disposal Site.	2.5 cm (1 inch) Sans Serif, Gothic or Block.
Do Not Create Dust	1.9 cm (¾ inch) Sans Serif, Gothic or Block.
Breathing Asbestos is Hazardous to Your Health.	14 Point Gothic.

Spacing between any two lines must be at least equal to the height of the upper of the two lines.

(2) The perimeter of the disposal site must be fenced in a manner adequate to deter access by the general public.

(3) Upon request and supply of appropriate information, the Administrator will determine whether a fence or a natural barrier adequately deters access by the general public.

(c) Rather than meet the no visible emission requirement of paragraph (a) of this section, at the end of each operating day, or at least once every 24-hour period while the site is in continuous operation, the asbestos-containing waste material that has been deposited at the site during the operating day or previous 24-hour period shall:

(1) Be covered with at least 15 centimeters (6 inches) of compacted nonasbestos-containing material, or

(2) Be covered with a resinous or petroleum-based dust suppression agent that effectively binds dust and controls wind erosion. Such an agent shall be used in the manner and frequency recommended for the particular dust by the dust suppression agent manufacturer to achieve and maintain dust control. Other equally effective dust suppression agents may be used upon prior approval by the Administrator. For purposes of this paragraph, any used, spent, or other waste oil is not considered a dust suppression agent.

(d) Rather than meet the no visible emission requirement of paragraph (a) of this section, use an alternative emissions control method that has received prior written approval by the Administrator according to the procedures described in §61.149(c)(2).

(e) For all asbestos-containing waste material received, the owner or operator of the active waste disposal site shall:

(1) Maintain waste shipment records, using a form similar to that shown in Figure 4, and include the following information:

(i) The name, address, and telephone number of the waste generator.

(ii) The name, address, and telephone number of the transporter(s).

(iii) The quantity of the asbestos-containing waste material in cubic meters (cubic yards).

(iv) The presence of improperly enclosed or uncovered waste, or any asbestos-containing waste material not sealed in leak-tight containers. Report in writing to the local, State, or EPA Regional office responsible for administering the asbestos NESHAP program for the waste generator (identified in the waste shipment record), and, if different, the local, State, or EPA Regional office responsible for administering the asbestos NESHAP program for the disposal site, by the following working day, the presence of a significant amount of improperly enclosed or uncovered waste. Submit a copy of the waste shipment record along with the report.

(v) The date of the receipt.

(2) As soon as possible and no longer than 30 days after receipt of the waste, send a copy of the signed waste shipment record to the waste generator.

(3) Upon discovering a discrepancy between the quantity of waste designated on the waste shipment records and the quantity actually received, attempt to reconcile the discrepancy with the waste generator. If the discrepancy is not resolved within 15 days after receiving the waste, immediately report in writing to the local, State, or EPA Regional office responsible for administering the asbestos NESHAP program for the waste generator (identified in the waste shipment record), and, if different, the local, State, or EPA Regional office responsible for administering the asbestos NESHAP program for the disposal site. Describe the discrepancy and attempts to reconcile it, and submit a copy of the waste shipment record along with the report.

(4) Retain a copy of all records and reports required by this paragraph for at least 2 years.

(f) Maintain, until closure, records of the location, depth and area, and quantity in cubic meters (cubic yards) of asbestos-containing waste material within the disposal site on a map or diagram of the disposal area.

(g) Upon closure, comply with all the provisions of § 61.151.

(h) Submit to the Administrator, upon closure of the facility, a copy of records of asbestos waste disposal locations and quantities.

(i) Furnish upon request, and make available during normal business hours for inspection by the Administrator, all records required under this section.

(j) Notify the Administrator in writing at least 45 days prior to excavating or otherwise disturbing any asbestos-containing waste material that has been deposited at a waste disposal site and is covered. If the excavation will begin on a date other than the one contained in the original notice, notice of the new start date must be provided to the Administrator at least 10 working days before excavation begins and in no event shall excavation begin earlier than the date specified in the original notification. Include the following information in the notice:

(1) Scheduled starting and completion dates.

(2) Reason for disturbing the waste.

(3) Procedures to be used to control emissions during the excavation, storage, transport, and ultimate disposal of the excavated asbestos-containing waste material. If deemed necessary, the Administrator may require changes in the emission control procedures to be used.

(4) Location of any temporary storage site and the final disposal site.

(Secs. 112 and 301(a) of the Clean Air Act as amended (42 U.S.C. 7412, 7601(a))

[49 FR 13661, Apr. 5, 1990. Redesignated and amended at 55 FR 48431, Nov. 20, 1990; 56 FR 1669, Jan. 16, 1991]

§ 61.155 Standard for operations that convert asbestos-containing waste material into nonasbestos (asbestos-free) material.

Each owner or operator of an operation that converts RACM and asbestos-containing waste material into nonasbestos (asbestos-free) material shall:

(a) Obtain the prior written approval of the Administrator to construct the facility. To obtain approval, the owner or operator shall provide the Administrator with the following information:

(1) Application to construct pursuant to § 61.07.

(2) In addition to the information requirements of § 61.07(b)(3), a

(i) Description of waste feed handling and temporary storage.

(ii) Description of process operating conditions.

(iii) Description of the handling and temporary storage of the end product.

(iv) Description of the protocol to be followed when analyzing output materials by transmission electron microscopy.

(3) Performance test protocol, including provisions for obtaining information required under paragraph (b) of this section.

(4) The Administrator may require that a demonstration of the process be performed prior to approval of the application to construct.

(b) Conduct a start-up performance test. Test results shall include:

(1) A detailed description of the types and quantities of nonasbestos material,

RACM, and asbestos-containing waste material processed, *e.g.*, asbestos cement products, friable asbestos insulation, plaster, wood, plastic, wire, etc. Test feed is to include the full range of materials that will be encountered in actual operation of the process.

(2) Results of analyses, using polarized light microscopy, that document the asbestos content of the wastes processed.

(3) Results of analyses, using transmission electron microscopy, that document that the output materials are free of asbestos. Samples for analysis are to be collected as 8-hour composite samples (one 200-gram (7-ounce) sample per hour), beginning with the initial introduction of RACM or asbestos-containing waste material and continuing until the end of the performance test.

(4) A description of operating parameters, such as temperature and residence time, defining the full range over which the process is expected to operate to produce nonasbestos (asbestos-free) materials. Specify the limits for each operating parameter within which the process will produce nonasbestos (asbestos-free) materials.

(5) The length of the test.

(c) During the initial 90 days of operation,

(1) Continuously monitor and log the operating parameters identified during start-up performance tests that are intended to ensure the production of nonasbestos (asbestos-free) output material.

(2) Monitor input materials to ensure that they are consistent with the test feed materials described during start-up performance tests in paragraph (b)(1) of this section.

(3) Collect and analyze samples, taken as 10-day composite samples (one 200-gram (7-ounce) sample collected every 8 hours of operation) of all output material for the presence of asbestos. Composite samples may be for fewer than 10 days. Transmission electron microscopy (TEM) shall be used to analyze the output material for the presence of asbestos. During the initial 90-day period, all output materials must be stored on-site until analysis shows the material to be asbestos-free or disposed of as asbestos-containing waste material according to §61.150.

(d) After the initial 90 days of operation,

(1) Continuously monitor and record the operating parameters identified during start-up performance testing and any subsequent performance testing. Any output produced during a period of deviation from the range of operating conditions established to ensure the production of nonasbestos (asbestos-free) output materials shall be:

(i) Disposed of as asbestos-containing waste material according to §61.150, or

(ii) Recycled as waste feed during process operation within the established range of operating conditions, or

(iii) Stored temporarily on-site in a leak-tight container until analyzed for asbestos content. Any product material that is not asbestos-free shall be either disposed of as asbestos-containing waste material or recycled as waste feed to the process.

(2) Collect and analyze monthly composite samples (one 200-gram (7-ounce) sample collected every 8 hours of operation) of the output material. Transmission electron microscopy shall be used to analyze the output material for the presence of asbestos.

(e) Discharge no visible emissions to the outside air from any part of the operation, or use the methods specified by §61.152 to clean emissions containing particulate asbestos material before they escape to, or are vented to, the outside air.

(f) Maintain records on-site and include the following information:

(1) Results of start-up performance testing and all subsequent performance testing, including operating parameters, feed characteristic, and analyses of output materials.

(2) Results of the composite analyses required during the initial 90 days of operation under §61.155(c).

(3) Results of the monthly composite analyses required under §61.155(d).

(4) Results of continuous monitoring and logs of process operating parameters required under §61.155 (c) and (d).

(5) The information on waste shipments received as required in §61.154(e).

(6) For output materials where no analyses were performed to determine the presence of asbestos, record the name and location of the purchaser or

disposal site to which the output materials were sold or deposited, and the date of sale or disposal.

(7) Retain records required by paragraph (f) of this section for at least 2 years.

(g) Submit the following reports to the Administrator:

(1) A report for each analysis of product composite samples performed during the initial 90 days of operation.

(2) A quarterly report, including the following information concerning activities during each consecutive 3-month period:

(i) Results of analyses of monthly product composite samples.

(ii) A description of any deviation from the operating parameters established during performance testing, the duration of the deviation, and steps taken to correct the deviation.

(iii) Disposition of any product produced during a period of deviation, including whether it was recycled, disposed of as asbestos-containing waste material, or stored temporarily on-site until analyzed for asbestos content.

(iv) The information on waste disposal activities as required in § 61.154(f).

(h) Nonasbestos (asbestos-free) output material is not subject to any of the provisions of this subpart. Output materials in which asbestos is detected, or output materials produced when the operating parameters deviated from those established during the start-up performance testing, unless shown by TEM analysis to be asbestos-free, shall be considered to be asbestos-containing waste and shall be handled and disposed of according to §§ 61.150 and 61.154 or reprocessed while all of the established operating parameters are being met.

[55 FR 48431, Nov. 20, 1990]

§ 61.156 Cross-reference to other asbestos regulations.

In addition to this subpart, the regulations referenced in Table 1 also apply to asbestos and may be applicable to those sources specified in §§ 61.142 through 61.151, 61.154, and 61.155 of this subpart. These cross-references are presented for the reader's information and to promote compliance with the cited regulations.

TABLE 1—CROSS-REFERENCE TO OTHER ASBESTOS REGULATIONS

Agency	CFR citation	Comment
EPA	40 CFR part 763, subpart E	Requires schools to inspect for asbestos and implement response actions and submit asbestos management plans to States. Specifies use of accredited inspectors, air sampling methods, and waste disposal procedures.
	40 CFR part 427	Effluent standards for asbestos manufacturing source categories.
	40 CFR part 763, subpart G	Protects public employees performing asbestos abatement work in States not covered by OSHA asbestos standard.
OSHA	29 CFR 1910.1001	Worker protection measures—engineering controls, worker training, labeling, respiratory protection, bagging of waste, 0.2 f/cc permissible exposure level.
	29 CFR 1926.58	Worker protection measures for all construction work involving asbestos, including demolition and renovation—work practices, worker training, bagging of waste, 0.2 f/cc permissible exposure level.
MSHA	30 part CFR 56, subpart D	Specifies exposures limits, engineering controls, and respiratory protection measures for workers in surface mines.
	30 CFR part 57, subpart D	Specifies exposure limits, engineering controls, and respiratory protection measures for workers in underground mines.
DOT	49 CFR parts 171 and 172	Regulates the transportation of asbestos-containing waste material. Requires waste containment and shipping papers.

[55 FR 48432, Nov. 20, 1990, as amended at 60 FR 31920, June 19, 1995]

§ 61.157 Delegation of authority.

(a) In delegating implementation and enforcement authority to a State under section 112(d) of the Act, the authorities contained in paragraph (b) of this section shall be retained by the Administrator and not transferred to a State.

(b) Authorities that will not be delegated to States:

(1) Section 61.149(c)(2)

(2) Section 61.150(a)(4)

(3) Section 61.151(c)
(4) Section 61.152(b)(3)
(5) Section 61.154(d)
(6) Section 61.155(a).

[55 FR 48433, Nov. 20, 1990]

APPENDIX A TO SUBPART M OF PART 61—INTERPRETIVE RULE GOVERNING ROOF REMOVAL OPERATIONS

I. Applicability of the Asbestos NESHAP

1.1. Asbestos-containing material (ACM) is material containing more than one percent asbestos as determined using the methods specified in appendix E, subpart E, 40 CFR part 763, section 1, Polarized Light Microscopy. The NESHAP classifies ACM as either ''friable'' or ''nonfriable''. Friable ACM is ACM that, when dry, can be crumbled, pulverized or reduced to powder by hand pressure. Nonfriable ACM is ACM that, when dry, cannot be crumbled, pulverized or reduced to powder by hand pressure.

1.2. Nonfriable ACM is further classified as either Category I ACM or Category II ACM. Category I ACM and Category II ACM are distinguished from each other by their potential to release fibers when damaged. Category I ACM includes asbestos-containing gaskets, packings, resilient floor coverings, resilient floor covering mastic, and asphalt roofing products containing more than one percent asbestos. Asphalt roofing products which may contain asbestos include built-up roofing; asphalt-containing single ply membrane systems; asphalt shingles; asphalt-containing underlayment felts; asphalt-containing roof coatings and mastics; and asphalt-containing base flashings. ACM roofing products that use other bituminous or resinous binders (such as coal tars or pitches) are also considered to be Category I ACM. Category II ACM includes all other nonfriable ACM, for example, asbestos-cement (A/C) shingles, A/C tiles, and transite boards or panels containing more than one percent asbestos. Generally speaking, Category II ACM is more likely to become friable when damaged than is Category I ACM. The applicability of the NESHAP to Category I and II ACM depends on: (1) the condition of the material at the time of demolition or renovation, (2) the nature of the operation to which the material will be subjected, (3) the amount of ACM involved.

1.3. Asbestos-containing material regulated under the NESHAP is referred to as ''regulated asbestos-containing material'' (RACM). RACM is defined in §61.141 of the NESHAP and includes: (1) friable asbestos-containing material; (2) Category I nonfriable ACM that has become friable; (3) Category I nonfriable ACM that has been or will be sanded, ground, cut, or abraded; or (4) Category II nonfriable ACM that has already been or is likely to become crumbled, pulverized, or reduced to powder. If the coverage threshold for RACM is met or exceeded in a renovation or demolition operation, then all friable ACM in the operation, and in certain situations, nonfriable ACM in the operation, are subject to the NESHAP.

A. Threshold Amounts of Asbestos-Containing Roofing Material

1.A.1. The NESHAP does not cover roofing projects on single family homes or on residential buildings containing four or fewer dwelling units. 40 CFR 61.141. For other roofing renovation projects, if the total asbestos-containing roof area undergoing renovation is less than 160 ft^2, the NESHAP does not apply, regardless of the removal method to be used, the type of material (Category I or II), or its condition (friable versus nonfriable). 40 CFR 61.145(a)(4). However, EPA would recommend the use of methods that damage asbestos-containing roofing material as little as possible. EPA has determined that where a rotating blade (RB) roof cutter or equipment that similarly damages the roofing material is used to remove Category I nonfriable asbestos-containing roofing material, the removal of 5580 ft^2 of that material will create 160 ft^2 of RACM. For the purposes of this interpretive rule, ''RB roof cutter'' means an engine-powered roof cutting machine with one or more rotating cutting blades the edges of which are blunt. (Equipment with blades having sharp or tapered edges, and/or which does not use a rotating blade, is used for ''slicing'' rather than ''cutting'' the roofing material; such equipment is not included in the term ''RB roof cutter''.) Therefore, it is EPA's interpretation that when an RB roof cutter or equipment that similarly damages the roofing material is used to remove Category I nonfriable asbestos-containing roofing material, any project that is 5580 ft^2 or greater is subject to the NESHAP; conversely, it is EPA's interpretation that when an RB roof cutter or equipment that similarly damages the roofing material is used to remove Category I nonfriable asbestos-containing roofing material in a roof removal project that is less than 5580 ft^2, the project is not subject to the NESHAP, except that notification is always required for demolitions. EPA further construes the NESHAP to mean that if slicing or other methods that do not sand, grind, cut or abrade will be used on Category I nonfriable ACM, the NESHAP does not apply, regardless of the area of roof to be removed.

1.A.2. For asbestos cement (A/C) shingles (or other Category II roofing material), if the area of the roofing material to be removed is at least 160 ft^2 and the removal methods will crumble, pulverize, reduce to powder, or contaminate with RACM (from other ACM that has been crumbled, pulverized or reduced to

powder) 160 ft^2 or more of such roofing material, the removal is subject to the NESHAP. Conversely, if the area of the A/C shingles (or other Category II roofing materials) to be removed is less than 160 ft^2, the removal is not subject to the NESHAP regardless of the removal method used, except that notification is always required for demolitions. 40 CFR 61.145(a). However, EPA would recommend the use of methods that damage asbestos-containing roofing material as little as possible. If A/C shingles (or other Category II roofing materials) are removed without 160 ft^2 or more of such roofing material being crumbled, pulverized, reduced to powder, or contaminated with RACM (from other ACM that has been crumbled, pulverized or reduced to powder), the operation is not subject to the NESHAP, even where the total area of the roofing material to be removed exceeds 160 ft^2; provided, however, that if the renovation includes other operations involving RACM, the roof removal operation is covered if the total area of RACM from all renovation activities exceeds 160 ft^2. *See* the definition of regulated asbestos-containing material (RACM), 40 CFR 61.141.

1.A.3. Only roofing material that meets the definition of ACM can qualify as RACM subject to the NESHAP. Therefore, to determine if a removal operation that meets or exceeds the coverage threshold is subject to the NESHAP, any suspect roofing material (*i.e.* roofing material that may be ACM) should be tested for asbestos. If any such roofing material contains more than one percent asbestos and if the removal operation is covered by the NESHAP, then EPA must be notified and the work practices in §61.145(c) must be followed. In EPA's view, if a removal operation involves at least the threshold level of suspect material, a roofing contractor may choose not to test for asbestos if the contractor follows the notification and work practice requirements of the NESHAP.

B. A/C Shingle Removal (Category II ACM Removal)

1.B.1. A/C shingles, which are Category II nonfriable ACM, become regulated ACM if the material has a high probability of becoming or has become crumbled, pulverized or reduced to powder by the forces expected to act on the material in the course of demolition or renovation operations. 40 CFR 61.141. However, merely breaking an A/C shingle (or any other category II ACM) that is not friable may not necessarily cause the material to become RACM. A/C shingles are typically nailed to buildings on which they are attached. EPA believes that the extent of breakage that will normally result from carefully removing A/C shingles and lowering the shingles to the ground will not result in crumbling, pulverizing or reducing the shingles to powder. Conversely, the extent of breakage that will normally occur if the A/C shingles are dropped from a building or scraped off of a building with heavy machinery would cause the shingles to become RACM. EPA therefore construes the NESHAP to mean that the removal of A/C shingles that are not friable, using methods that do not crumble, pulverize, or reduce the A/C shingles to powder (such as pry bars, spud bars and shovels to carefully pry the material), is not subject to the NESHAP provided that the A/C shingles are properly handled during and after removal, as discussed in this paragraph and the asbestos NESHAP. This interpretation also applies to other Category II nonfriable asbestos-containing roofing materials.

C. Cutting vs. Slicing and Manual Methods for Removal of Category I ACM

1.C.1. Because of damage to the roofing material, and the potential for fiber release, roof removal operations using rotating blade (RB) roof cutters or other equipment that sand, grind, cut or abrade the roof material are subject to the NESHAP. As EPA interprets the NESHAP, the use of certain manual methods (using equipment such as axes, hatchets, or knives, spud bars, pry bars, and shovels, but not saws) or methods that slice, shear, or punch (using equipment such as a power slicer or power plow) does not constitute ''cutting, sanding, grinding or abrading.'' This is because these methods do not destroy the structural matrix or integrity of the material such that the material is crumbled, pulverized or reduced to powder. Hence, it is EPA's interpretation that when such methods are used, assuming the roof material is not friable, the removal operation is not subject to the regulation.

1.C.2. Power removers or power tear-off machines are typically used to pry the roofing material up from the deck after the roof membrane has been cut. It is EPA's interpretation that when these machines are used to pry roofing material up, their use is not regulated by the NESHAP.

1.C.3. As noted previously, the NESHAP only applies to the removal of asbestos-containing roofing materials. Thus, the NESHAP does not apply to the use of RB cutters to remove non-asbestos built up roofing (BUR). On roofs containing some asbestos-containing and some non-asbestos-containing materials, coverage under the NESHAP depends on the methods used to remove each type of material in addition to other coverage thresholds specified above. For example, it is not uncommon for existing roofs to be made of non-asbestos BUR and base flashings that do contain asbestos. In that situation, EPA construes the NESHAP to be inapplicable to the removal of the non-asbestos BUR using an RB cutter so long as the RB cutter is not used to cut 5580

ft^2 or more of the asbestos-containing base flashing or other asbestos-containing material into sections. In addition, the use of methods that slice, shear, punch or pry could then be used to remove the asbestos flashings and not trigger coverage under the NESHAP.

II. Notification

2.1. Notification for a demolition is always required under the NESHAP. However, EPA believes that few roof removal jobs constitute ''demolitions'' as defined in the NESHAP (§61.141). In particular, it is EPA's view that the removal of roofing systems (i.e., the roof membrane, insulation, surfacing, coatings, flashings, mastic, shingles, and felt underlayment), when such removal is not a part of a demolition project, constitutes a ''renovation'' under the NESHAP. If the operation is a renovation, and Category I roofing material is being removed using either manual methods or slicing, notification is not required by the NESHAP. If Category II material is not friable and will be removed without crumbling, pulverizing, or reducing it to powder, no notification is required. Also, if the renovation involves less than the threshold area for applicability as discussed above, then no notification is required. However, if a roof removal meets the applicability and threshold requirements under the NESHAP, then EPA (or the delegated agency) must be notified in advance of the removal in accordance with the requirements of §61.145(b), as follows:

- Notification must be given in writing at least 10 working days in advance and must include the information in §61.145(b)(4), except for emergency renovations as discussed below.
- The notice must be updated as necessary, including, for example, when the amount of asbestos-containing roofing material reported changes by 20 percent or more.
- EPA must be notified if the start date of the roof removal changes. If the start date of a roof removal project is changed to an earlier date, EPA must be provided with a written notice of the new start date at least 10 working days in advance. If the start date changes to a later date, EPA must be notified by telephone as soon as possible before the original start date and a written notice must be sent as soon as possible.
- For emergency renovations (as defined in §61.141), where work must begin immediately to avoid safety or public health hazards, equipment damage, or unreasonable financial burden, the notification must be postmarked or delivered to EPA as soon as possible, but no later than the following work day.

III. Emission Control Practices

A. Requirements to Adequately Wet and Discharge No Visible Emission

3.A.1. The principal controls contained in the NESHAP for removal operations include requirements that the affected material be adequately wetted, and that asbestos waste be handled, collected, and disposed of properly. The requirements for disposal of waste materials are discussed separately in section IV below. The emission control requirements discussed in this section III apply only to roof removal operations that are covered by the NESHAP as set forth in Section I above.

3.A.2. For any operation subject to the NESHAP, the regulation (§§61.145(c)(2)(i), (3), (6)(i)) requires that RACM be adequately wet (as defined in §61.141) during the operation that damages or disturbs the asbestos material until collected for disposal.

3.A.3. When using an RB roof cutter (or any other method that sands, grinds, cuts or abrades the roofing material) to remove Category I asbestos-containing roofing material, the emission control requirements of §61.145(c) apply as discussed in Section I above. EPA will consider a roof removal project to be in compliance with the ''adequately wet'' and ''discharge no visible emission'' requirements of the NESHAP if the RB roof cutter is equipped and operated with the following: (1) a blade guard that completely encloses the blade and extends down close to the roof surface; and (2) a device for spraying a fine mist of water inside the blade guard, and which device is in operation during the cutting of the roof.

B. Exemptions From Wetting Requirements

3.B.1. The NESHAP provides that, in certain instances, wetting may not be required during the cutting of Category I asbestos roofing material with an RB roof cutter. If EPA determines in accordance with §61.145(c)(3)(i), that wetting will unavoidably damage the building, equipment inside the building, or will present a safety hazard while stripping the ACM from a facility component that remains in place, the roof removal operation will be exempted from the requirement to wet during cutting. EPA must have sufficient written information on which to base such a decision. Before proceeding with a dry removal, the contractor must have received EPA's written approval. Such exemptions will be made on a case-by-case basis.

3.B.2. It is EPA's view that, in most instances, exemptions from the wetting requirements are not necessary. Where EPA grants an exemption from wetting because of the potential for damage to the building, damage to equipment within the building or a safety hazard, the NESHAP specifies alternative control methods (§61.145(c)(3)(i)(B)).

Alternative control methods include (a) the use of local exhaust ventilation systems that capture the dust, and do not produce visible emissions, or (b) methods that are designed and operated in accordance with the requirements of §61.152, or (c) other methods that have received the written approval of EPA. EPA will consider an alternative emission control method in compliance with the NESHAP if the method has received written approval from EPA and the method is being implemented consistent with the approved procedures (§61.145(c)(3)(ii) or §61.152(b)(3)).

3.B.3. An exemption from wetting is also allowed when the air or roof surface temperature at the point of wetting is below freezing, as specified in §61.145(c)(7). If freezing temperatures are indicated as the reason for not wetting, records must be kept of the temperature at the beginning, middle and end of the day on which wetting is not performed and the records of temperature must be retained for at least 2 years. 42 CFR §61.145(c)(7)(iii). It is EPA's interpretation that in such cases, no written application to, or written approval by the Administrator is needed for using emission control methods listed in §61.145(c)(3)(i)(B), or alternative emission control methods that have been previously approved by the Administrator. However, such written application or approval is required for alternative emission control methods that have not been previously approved. Any dust and debris collected from cutting must still be kept wet and placed in containers. All of the other requirements for notification and waste disposal would continue to apply as described elsewhere in this notice and the Asbestos NESHAP.

C. Waste Collection and Handling

3.C.1. It is EPA's interpretation that waste resulting from slicing and other methods that do not cut, grind, sand or abrade Category I nonfriable asbestos-containing roofing material is not subject to the NESHAP and can be disposed of as nonasbestos waste. EPA further construes the NESHAP to provide that if Category II roofing material (such as A/C shingles) is removed and disposed of without crumbling, pulverizing, or reducing it to powder, the waste from the removal is not subject to the NESHAP waste disposal requirements. EPA also interprets the NESHAP to be inapplicable to waste resulting from roof removal operations that do not meet or exceed the coverage thresholds described in section I above. Of course, other State, local, or Federal regulations may apply.

3.C.2. It is EPA's interpretation that when an RB roof cutter, or other method that similarly damages the roofing material, is used to cut Category I asbestos containing roofing material, the damaged material from the cut (the sawdust or debris) is considered asbestos containing waste subject to §61.150 of the NESHAP, provided the coverage thresholds discussed above in section 1 are met or exceeded. This sawdust or debris must be disposed of at a disposal site operated in accordance with the NESHAP. It is also EPA's interpretation of the NESHAP that if the remainder of the roof is free of the sawdust and debris generated by the cutting, or if such sawdust or debris is collected as discussed below in paragraphs 3.C.3, 3.C.4, 3.C.5 and 3.C.6, the remainder of the roof can be disposed of as nonasbestos waste because it is considered to be Category I nonfriable material (as long as the remainder of the roof is in fact nonasbestos material or if it is Category I asbestos material and the removal methods do not further sand, grind, cut or abrade the roof material). EPA further believes that if the roof is not cleaned of such sawdust or debris, *i.e.*, it is contaminated, then it must be treated as asbestos-containing waste material and be handled in accordance with §61.150.

3.C.3. In order to be in compliance with the NESHAP while using an RB roof cutter (or device that similarly damages the roofing material) to cut Category I asbestos containing roofing material, the dust and debris resulting from the cutting of the roof should be collected as soon as possible after the cutting operation, and kept wet until collected and placed in leak-tight containers. EPA believes that where the blade guard completely encloses the blade and extends down close to the roof surface and is equipped with a device for spraying a fine mist of water inside the blade guard, and the spraying device is in operation during the cutting, most of the dust and debris from cutting will be confined along the cut. The most efficient methods to collect the dust and debris from cutting are to immediately collect or vacuum up the damaged material where it lies along the cut using a filtered vacuum cleaner or debris collector that meets the requirements of 40 CFR 61.152 to clean up as much of the debris as possible, or to gently sweep up the bulk of the debris, and then use a filtered vacuum cleaner that meets the requirements of 40 CFR 61.152 to clean up as much of the remainder of the debris as possible. On smooth surfaced roofs (nonaggregate roofs), sweeping up the debris and then wet wiping the surface may be done in place of using a filtered vacuum cleaner. It is EPA's view that if these decontamination procedures are followed, the remaining roofing material does not have to be collected and disposed of as asbestos waste. Additionally, it is EPA's view that where such decontamination procedures are followed, if the remaining portions of the roof are non-asbestos or Category I nonfriable asbestos material, and if the remaining portions are removed using removal methods that slice, shear, punch or

pry, as discussed in section 1.C above, then the remaining portions do not have to be collected and disposed of as asbestos waste and the NESHAP's no visible emissions and adequately wet requirements are not applicable to the removal of the remaining portions. In EPA's interpretation, the failure of a filtered vacuum cleaner or debris collector to collect larger chunks or pieces of damaged roofing material created by the RB roof cutter does not require the remaining roofing material to be handled and disposed of as asbestos waste, provided that such visible chunks or pieces of roofing material are collected (e.g. by gentle sweeping) and disposed of as asbestos waste. Other methods of decontamination may not be adequate, and should be approved by the local delegated agency.

3.C.4. In EPA's interpretation, if the debris from the cutting is not collected immediately, it will be necessary to lightly mist the dust or debris, until it is collected, as discussed above, and placed in containers. The dust or debris should be lightly misted frequently enough to prevent the material from drying, and to prevent airborne emissions, prior to collection as described above. It is EPA's interpretation of the NESHAP that if these procedures are followed, the remaining roofing material does not have to be collected and disposed of as asbestos waste, as long as the remaining roof material is in fact nonasbestos material or if it is Category I asbestos material and the removal methods do not further sand, grind, cut or abrade the roof material.

3.C.5. It is EPA's interpretation that, provided the roofing material is not friable prior to the cutting operation, and provided the roofing material has not been made friable by the cutting operation, the appearance of rough, jagged or damaged edges on the remaining roofing material, due to the use of an RB roof cutter, does not require that such remaining roofing material be handled and disposed of as asbestos waste. In addition, it is also EPA's interpretation that if the sawdust or debris generated by the use of an RB roof cutter has been collected as discussed in paragraphs 3.C.3, 3.C.4 and 3.C.6, the presence of dust along the edge of the remaining roof material does not render such material ''friable'' for purposes of this interpretive rule or the NESHAP, provided the roofing material is not friable prior to the cutting operation, and provided that the remaining roofing material near the cutline has not been made friable by the cutting operation. Where roofing material near the cutline has been made friable by the use of the RB cutter (*i.e.* where such remaining roofing material near the cutline can be crumbled, pulverized or reduced to powder using hand pressure), it is EPA's interpretation that the use of an encapsulant will ensure that such friable material need not be treated or disposed of as asbestos containing waste material. The encapsulant may be applied to the friable material after the roofing material has been collected into stacks for subsequent disposal as nonasbestos waste. It is EPA's view that if the encapsulation procedure set forth in this paragraph is followed in operations where roofing material near the cutline has been rendered friable by the use of an RB roof cutter, and if the decontamination procedures set forth in paragraph 3.C.3 have been followed, the NESHAP's no visible emissions and adequately wet requirements would be met for the removal, handling and disposal of the remaining roofing material.

3.C.6. As one way to comply with the NESHAP, the dust and debris from cutting can be placed in leak-tight containers, such as plastic bags, and the containers labeled using warning labels required by OSHA (29 CFR 1926.58). In addition, the containers must have labels that identify the waste generator (such as the name of the roofing contractor, abatement contractor, and/or building owner or operator) and the location of the site at which the waste was generated.

IV. Waste Disposal

A. Disposal Requirements

4.A.1. Section 61.150(b) requires that, as soon as is practical, all collected dust and debris from cutting as well as any contaminated roofing squares, must be taken to a landfill that is operated in accordance with §61.154 or to an EPA-approved site that converts asbestos waste to nonasbestos material in accordance with §61.155. During the loading and unloading of affected waste, asbestos warning signs must be affixed to the vehicles.

B. Waste Shipment Record

4.B.1. For each load of asbestos waste that is regulated under the NESHAP, a waste shipment record (WSR) must be maintained in accordance with §61.150(d). Information that must be maintained for each waste load includes the following:

- Name, address, and telephone number of the waste generator
- Name and address of the local, State, or EPA regional office responsible for administering the asbestos NESHAP program
- Quantity of waste in cubic meters (or cubic yards)
- Name and telephone number of the disposal site operator
- Name and physical site location of the disposal site
- Date transported
- Name, address, and telephone number of the transporter(s)
- Certification that the contents meet all government regulations for transport by highways.

4.B.2. The waste generator is responsible for ensuring that a copy of the WSR is delivered to the disposal site along with the waste shipment. If a copy of the WSR signed by the disposal site operator is not returned to the waste generator within 35 days, the waste generator must contact the transporter and/or the disposal site to determine the status of the waste shipment. 40 CFR 61.150(d)(3). If the signed WSR is not received within 45 days, the waste generator must report, in writing, to the responsible NESHAP program agency and send along a copy of the WSR. 40 CFR 61.150(d)(4). Copies of WSRs, including those signed by the disposal site operator, must be retained for at least 2 years. 40 CFR 61.150(d)(5).

V. Training

5.1. For those roof removals that are subject to the NESHAP, at least one on-site supervisor trained in the provisions of the NESHAP must be present during the removal of the asbestos roofing material. 40 CFR 61.145(c)(8). In EPA's view, this person can be a job foreman, a hired consultant, or someone who can represent the building owner or contractor responsible for the removal. In addition to the initial training requirement, a refresher training course is required every 2 years. The NESHAP training requirements became effective on November 20, 1991.

5.2. Asbestos training courses developed specifically to address compliance with the NESHAP in roofing work, as well as courses developed for other purposes can satisfy this requirement of the NESHAP, as long as the course covers the areas specified in the regulation. EPA believes that Asbestos Hazard Emergency Response Act (AHERA) training courses will, for example, satisfy the NESHAP training requirements. However, nothing in this interpretive rule or in the NESHAP shall be deemed to require that roofing contractors or roofing workers performing operations covered by the NESHAP must be trained or accredited under AHERA, as amended by the Asbestos School Hazard Abatement Reauthorization Act (ASHARA). Likewise, state or local authorities may independently impose additional training, licensing, or accreditation requirements on roofing contractors performing operations covered by the NESHAP, but such additional training, licensing or accreditation is not called for by this interpretive rule or the federal NESHAP.

5.3. For removal of Category I asbestos containing roofing material where RB roof cutters or equipment that similarly damages the asbestos-containing roofing material are used, the NESHAP training requirements (§61.145(c)(8)) apply as discussed in Section I above. It is EPA's intention that removal of Category I asbestos-containing roofing material using hatchets, axes, knives, and/or the use of spud bars, pry bars and shovels to lift the roofing material, or similar removal methods that slice, punch, or shear the roof membrane are not subject to the training requirements, since these methods do not cause the roof removal to be subject to the NESHAP. Likewise, it is EPA's intention that roof removal operations involving Category II nonfriable ACM are not subject to the training requirements where such operations are not subject to the NESHAP as discussed in section I above.

[59 FR 31158, June 17, 1994, as amended at 60 FR 31920, June 19, 1995]

Subpart N—National Emission Standard for Inorganic Arsenic Emissions From Glass Manufacturing Plants

SOURCE: 51 FR 28025, Aug. 4, 1986, unless otherwise noted.

§ 61.160 Applicability and designation of source.

(a) The source to which this subpart applies is each glass melting furnace that uses commercial arsenic as a raw material. This subpart does not apply to pot furnaces.

(b) Rebricking is not considered construction or modification for the purposes of §61.05(a).

§ 61.161 Definitions.

The terms used in this subpart are defined in the Clean Air Act, in §61.02, or in this section as follows:

Arsenic-containing glass type means any glass that is distinguished from other glass solely by the weight percent of arsenic added as a raw material and by the weight percent of arsenic in the glass produced. Any two or more glasses that have the same weight percent of arsenic in the raw materials as well as in the glass produced shall be considered to belong to one arsenic-containing glass type, without regard to the recipe used or any other characteristics of the glass or the method of production.

By-pass the control device means to operate the glass melting furnace without operating the control device to which that furnace's emissions are directed routinely.

Commercial arsenic means any form of arsenic that is produced by extraction

from any arsenic-containing substance and is intended for sale or for intentional use in a manufacturing process. Arsenic that is a naturally occurring trace constituent of another substance is not considered ''commercial arsenic.''

Cullet means waste glass recycled to a glass melting furnace.

Glass melting furnace means a unit comprising a refractory vessel in which raw materials are charged, melted at high temperature, refined, and conditioned to produce molten glass. The unit includes foundations, superstructure and retaining walls, raw material charger systems, heat exchangers, melter cooling system, exhaust system, refractory brick work, fuel supply and electrical boosting equipment, integral control systems and instrumentation, and appendages for conditioning and distributing molten glass to forming apparatuses. The forming apparatuses, including the float bath used in flat glass manufacturing, are not considered part of the glass melting furnace.

Glass produced means the glass pulled from the glass melting furnace.

Inorganic arsenic means the oxides and other noncarbon compounds of the element arsenic included in particulate matter, vapors, and aerosols.

Malfunction means any sudden failure of air pollution control equipment or process equipment or of a process to operate in a normal or usual manner so that emissions of arsenic are increased.

Pot furnace means a glass melting furnace that contains one or more refractory vessels in which glass is melted by indirect heating. The openings of the vessels are in the outside wall of the furnace and are covered with refractory stoppers during melting.

Rebricking means cold replacement of damaged or worn refractory parts of the glass melting furnace. Rebricking includes replacement of the refractories comprising the bottom, sidewalls, or roof of the melting vessel; replacement of refractory work in the heat exchanger; and replacement of refractory portions of the glass conditioning and distribution system.

Shutdown means the cessation of operation of an affected source for any purpose.

Theoretical arsenic emissions factor means the amount of inorganic arsenic, expressed in grams per kilogram of glass produced, as determined based on a material balance.

Uncontrolled total arsenic emissions means the total inorganic arsenic in the glass melting furnace exhaust gas preceding any add-on emission control device.

[51 FR 28025, Aug. 4, 1986; 51 FR 35355, Oct. 3, 1986]

§61.162 Emission limits.

(a) The owner or operator of an existing glass melting furnace subject to the provisions of this subpart shall comply with either paragraph (a)(1) or (a)(2) of this section; except as provided in paragraph (c) of this section.

(1) Uncontrolled total arsenic emissions from the glass melting furnace shall be less than 2.5 Mg (2.7 ton) per year, or

(2) Total arsenic emissions from the glass melting furnace shall be conveyed to a control device and reduced by at least 85 percent.

(b) The owner or operator of a new or modified glass melting furnace subject to the provisions of this subpart shall comply with either paragraph (b)(1) or (b)(2) of this section, except as provided in paragraph (c) of this section.

(1) Uncontrolled total arsenic emissions from the glass melting furnace shall be less than 0.4 Mg (0.44 ton) per year, or

(2) Total arsenic emissions from the glass melting furnace shall be conveyed to a control device and reduced by at least 85 percent.

(c) An owner or operator of a source subject to the requirements of this section may, after approval by the Administrator, bypass the control device to which arsenic emissions from the furnace are directed for a limited period of time for designated purposes such as maintenance of the control device, as specified in §61.165(e).

(d) At all times, including periods of startup, shutdown, and malfunction, the owner or operator of a glass melting furnace subject to the provisions of this subpart shall operate and maintain the furnace and associated air pollution control equipment in a manner

consistent with good air pollution control practice for minimizing emissions of inorganic arsenic to the atmosphere to the maximum extent practicable. Determination of whether acceptable operating and maintenance procedures are being used will be based on information available to the Administrator, which may include, but is not limited to, monitoring results, review of operating and maintenance procedures, inspection of the source, and review of other records.

[51 FR 28025, Aug. 4, 1986, as amended at 65 FR 62157, Oct. 17, 2000]

§ 61.163 Emission monitoring.

(a) An owner or operator of a glass melting furnace subject to the emission limit in § 61.162(a)(2) or § 61.162(b)(2) shall:

(1) Install, calibrate, maintain, and operate a continuous monitoring system for the measurement of the opacity of emissions discharged into the atmosphere from the control device; and

(2) Install, calibrate, maintain, and operate a monitoring device for the continuous measurement of the temperature of the gas entering the control device.

(b) All continuous monitoring systems and monitoring devices shall be installed and operational prior to performance of an emission test required by § 61.164(a). Verification of operational status shall, at a minimum, consist of an evaluation of the monitoring system in accordance with the requirements and procedures contained in Performance Specification 1 of appendix B of 40 CFR part 60.

(c) During the emission test required in § 61.164(a) each owner or operator subject to paragraph (a) of this section shall:

(1) Conduct continuous opacity monitoring from the beginning of the first test run until the completion of the third test run. Process and control equipment shall be operated in a manner that will minimize opacity of emissions, subject to the Administrator's approval.

(2) Calculate 6-minute opacity averages from 24 or more data points equally spaced over each 6-minute period during the test runs.

(3) Determine, based on the 6-minute opacity averages, the opacity value corresponding to the 99 percent upper confidence level of a normal or log-normal (whichever the owner or operator determines is more representative) distribution of the average opacity values.

(4) Conduct continuous monitoring of the temperature of the gas entering the control device from the beginning of the first test run until completion of the third test run.

(5) Calculate 15-minute averages of the temperature of the gas entering the control device during each test run.

(d) An owner or operator may redetermine the values described in paragraph (c) of this section during any emission test that demonstrates compliance with the emission limits in § 61.162(a)(2) or § 61.162(b)(2).

(e) The requirements of § 60.13(d) and § 60.13(f) shall apply to an owner or operator subject to paragraph (a) of this section.

(f) Except for system breakdowns, repairs, calibration checks, and zero and span adjustments required under § 60.13(d), all continuous monitoring systems shall be in continuous operation and shall meet minimum frequency of operation requirements by completing a minimum of one cycle of sampling and analyzing for each successive 10-second period and one cycle of data recording for each successive 6-minute period.

(g) An owner or operator subject to paragraph (a) of this section shall:

(1) Reduce all opacity data to 6-minute averages. Six-minute averages shall be calculated from 24 or more data points equally spaced over each 6-minute period. Data recorded during periods of monitoring system breakdowns, repairs, calibration checks, and zero and span adjustments shall not be included in the data averages calculated under this paragraph, and

(2) Calculate 15-minute averages of the temperature of the gas entering the control device for each 15-minute operating period.

(h) After receipt and consideration of written application, the Administrator may approve alternative monitoring systems for the measurement of one or more process or operating parameters that is or are demonstrated to enable

accurate and representative monitoring of a properly operating control device. Upon approval of an alternative monitoring system for an affected source, the Administrator will specify requirements to replace the requirements of paragraphs (a)—(g) of this section for that system.

[51 FR 28025, Aug. 4, 1986, as amended at 64 FR 7467, Feb. 12, 1999]

§61.164 Test methods and procedures.

(a) To demonstrate compliance with §61.162, the owner or operator shall conduct emission tests, reduce test data, and follow the procedures specified in this section unless the Administrator:

(1) Specifies or approves, in specific cases, the use of a reference method with minor changes in methodology;

(2) Approves the use of an equivalent method;

(3) Approves the use of an alternative method the results of which he has determined to be adequate for indicating whether a specific source is in compliance; or

(4) Waives the requirement for emission tests as provided under §61.13.

(b) Unless a waiver of emission testing is obtained, the owner or operator shall conduct emission tests required by this section:

(1) No later than 90 days after the effective date of this subpart for a source that has an initial startup date preceding the effective date; or

(2) No later than 90 days after startup for a source that has an initial startup date after the effective date.

(3) At such other times as may be required by the Administrator under section 114 of the Act.

(4) While the source is operating under such conditions as the Administrator may specify, based on representative performance of the source.

(c) To demonstrate compliance with §61.162(a)(1) when less than 8.0 Mg (8.8 ton) per year of elemental arsenic is added to any existing glass melting furnace, or to demonstrate compliance with §61.162(b)(1) when less than 1.0 Mg (1.1 ton) per year of elemental arsenic is added to any new or modified glass melting furnace, an owner or operator shall:

(1) Derive a theoretical uncontrolled arsenic emission factor (T), based on material balance calculations for each arsenic-containing glass type (i) produced during the 12-month period, as follows:

$$T_i = \left(A_{bi} \times W_{bi}\right) + \left(A_{ci} \times W_{ci}\right) - B_{gi}$$

Where:

T_i = The theoretical uncontrolled arsenic emission factor for each glass type (i), g/kg (lb/ton).

A_{bi} = Fraction by weight of elemental arsenic in the fresh batch for each glass type (I).

W_{bi} = Weight of fresh batch melted per unit weight of glass produced for each glass type (i), g/kg (lb/ton).

A_{ci} = Fraction by weight of elemental arsenic in cullet for each glass type (i).

W_{ci} = Weight of cullet melted per unit weight of glass produced for each glass type (i), g/kg (lb/ton).

B_{gi} = Weight of elemental arsenic per unit weight of glass produced for each glass type (i), g/kg (lb/ton).

(2) Estimate theoretical uncontrolled arsenic emissions for the 12-month period for each arsenic-containing glass type as follows:

$$Y_i = \frac{T_i G_i}{K}$$

Where:

Y_i = Theoretical uncontrolled arsenic emission estimate for the 12-month period for each glass type, Mg/year (ton/year).

T_i = Theoretical uncontrolled arsenic emission factor for each type of glass (i) produced during the 12-month period as calculated in paragraph (c)(1) of this section, g/kg (lb/ton).

G_i = Quantity of each arsenic-containing glass type (i) produced during the 12-month period, kg/yr (ton/yr).

K = conversion factor for unit consistency, 10^6 g/Mg (2,000 lb/ton).

(3) Estimate the total theoretical uncontrolled arsenic emissions for the 12-month period by finding the sum of the values calculated for Y_i in paragraph (c)(2) of this section.

(4) If the value determined in paragraph (c)(3) of this section is equal to or greater than the applicable limit in § 61.162(a)(1) or (b)(1), conduct the emission testing and calculations described in paragraphs (d)(1) through (d)(5) of this section. If the value is less than the applicable limit, the source is in compliance and no emission testing or additional calculations are required.

(d) To demonstrate compliance with § 61.162(a)(1) when 8.0 Mg (8.8 ton) per year or more of elemental arsenic are added to any existing glass melting furnace, or to demonstrate compliance with § 61.162(b)(1) when 1.0 Mg (1.1 ton) per year or more of elemental arsenic is added to any new or modified glass melting furnace, an owner or operator shall:

(1) Estimate the theoretical uncontrolled arsenic emissions for each glass type for the 12-month period by performing the calculations described in paragraphs (c)(1) and (c)(2) of this section.

(2) Conduct emission testing to determine the actual uncontrolled arsenic emission rate during production of the arsenic-containing glass type with the highest theoretical uncontrolled arsenic emissions as calculated under paragraph (d)(1) of this section. The owner or operator shall use the following test methods and procedures:

(i) Use Method 108 in appendix B to this part for determinig the arsenic emission rate, g/hr (lb/hr). The emission rate shall equal the arithmetic mean of the results of three 60-minute test runs.

(ii) Use the following methods in appendix A to 40 CFR part 60:

(A) Method 1 for sample and velocity traverse.

(B) Method 2 for velocity and volumetric flowrate.

(C) Method 3 for gas analysis.

(D) For sources equipped with positive pressure fabric filters, use Section 8.0 of Method 5D to determine a suitable sampling location and procedure.

(3) Determine the actual uncontrolled arsenic emission factor (R_a) as follows:

$$R_a = E_a \div P$$

Where:

R_a = Actual uncontrolled arsenic emission factor, g/kg (lb/ton).

E_a = Actual uncontrolled arsenic emission rate from paragraph (d)(2) of this section, g/hr (lb/hr).

P = Rate of glass production, kg/hr (ton/hr), determined by dividing the weight of glass pulled from the furnace during the emission test by the number of hours taken to perform the test under paragraph (d)(2) of this section.

(4) Calculate a correction factor to relate the theoretical and the actual uncontrolled arsenic emission factors as follows:

$$F = R_a \div T_i$$

Where:

F=the correction factor.

R_a = Actual uncontrolled arsenic emission factor, determined in paragraph (d)(3) of this section, g/kg (lb/ton).

T_i = Theoretical uncontrolled arsenic emission factor, g/kg (lb/ton), determined in paragraph (c)(1) of this section for the same glass type for which R_a was determined.

(5) Determine the uncontrolled arsenic emission rate for the 12-month period, as follows:

$$U = \frac{\sum_{i=1}^{n} \left(T_i \times F \times G_i\right)}{K}$$

Where:

U = Uncontrolled arsenic emission rate for the 12-month period, Mg/yr (ton/yr).

T_i = Theoretical uncontrolled arsenic emission factor for each type of glass (i) produced during the 12-month period as calculated in paragraph (c)(1) of this section, g/kg (lb/ton).

F = The correction factor calculated in paragraph (d)(4) of this section.

G_i = Quantity of each arsenic-containing glass type (i) produced during the 12-month period, kg/yr (ton/yr).

n = Number of arsenic-containing glass types produced during the 12-month period.
K = Conversion factor for unit consistency, 10^6 g/Mg (2,000 lb/ton).

(6) If the value determined in paragraph (d)(5) of this section is less than the applicable limit in §61.162(a)(1) or (b)(1), the source is in compliance.

(e) To demonstrate compliance with §61.162(a)(2) or (b)(2), an owner or operator shall:

(1) Conduct emission testing to determine the percent reduction of inorganic arsenic emissions being achieved by the control device, using the following test methods and procedures:

(i) Use Method 108 in appendix B to this part to determine the concentration of arsenic in the gas streams entering and exiting the control device. Conduct three 60-minute test runs, each consisting of simultaneous testing of the inlet and outlet gas streams. The gas streams shall contain all the gas exhausted from the glass melting furnace.

(ii) Use the following methods in appendix A to 40 CFR part 60:

(A) Method 1 for sample and velocity traverses.

(B) Method 2 for velocity and volumetric flowrate.

(C) Method 3 for gas analysis.

(D) For sources equipped with positive pressure fabric filters, use Section 8.0 of Method 5D to determine a suitable sampling location and procedure.

(2) Calculate the percent emission reduction for each run as follows:

$$D = \frac{(C_b - C_a) \times 100}{C_b}$$

Where:

D= the percent emission reduction.
C_b= the arsenic concentration of the stack gas entering the control device, as measured by Method 108.
C_a= the arsenic concentration of the stack gas exiting the control device, as measured by Method 108.

(3) Determine the average percent reduction of arsenic by calculating the arithmetic mean of the results for the three runs. If it is at least 85 percent, the source is in compliance.

[51 FR 28025, Aug. 4, 1986; 51 FR 35355, Oct. 3, 1986, as amended at 55 FR 22027, May 31, 1990; 65 FR 62157, Oct. 17, 2000]

§61.165 Reporting and recordkeeping requirements.

(a) Each owner or operator of a source subject to the requirements of §61.162 shall maintain at the source for a period of at least 2 years and make available to the Administrator upon request a file of the following records:

(1) All measurements, including continuous monitoring for measurement of opacity, and temperature of gas entering a control device;

(2) Records of emission test data and all calculations used to produce the required reports of emission estimates to demonstrate compliance with §61.162;

(3) All continous monitoring system performance evaluations, including calibration checks and adjustments;

(4) The occurrence and duration of all startups, shutdowns, and malfunctions of the furnace;

(5) All malfunctions of the air pollution control system;

(6) All periods during which any continuous monitoring system or monitoring device is inoperative;

(7) All maintenance and repairs for each air pollution control system, continuous monitoring system, or monitoring device;

(b) Each owner or operator who is given approval by the Administrator to bypass a control device under paragraph (e) of this section shall maintain at the source for a period of at least 2 years and make available to the Administrator upon request a file of the following records:

(1) The dates the control device is bypassed; and

(2) Steps taken to minimize arsenic emissions during the period the control device was bypassed.

(c) Each owner or operator of a source subject to the emission limit in §61.162(a)(1) or (b)(1) shall determine and record at the end of every 6 months the uncontrolled arsenic emission rate for the preceding and forthcoming 12-month periods. The determinations shall:

(1) Be made by following the procedures in §61.164(c)(1), (c)(2), and (c)(3); or in §61.164(d)(5), whichever is applicable; and

(2) Take into account changes in production rates, types of glass produced,

and other factors that would affect the uncontrolled arsenic emission rate.

(d) Each owner or operator of a source subject to the provisions of this subpart shall:

(1) Provide the Administrator 30 days prior notice of any emission test required in §61.164 to afford the Administrator the opportunity to have an observer present; and

(2) Submit to the Administrator a written report of the results of the emission test and associated calculations required in § 61.164(d) or (e), as applicable, within 60 days after conducting the test.

(3) Submit to the Administrator a written report of the arsenic emission estimates calculated under § 61.164(c):

(i) Within 45 days after the effective date of this subpart for a source that has an initial startup date preceding the effective date; or

(ii) Within 45 days after startup for a source that has an initial startup date after the effective date.

(4) Submit to the Adminstrator a written report of the uncontrolled arsenic emission rates determined in accordance with paragraph (c) of this section, if:

(i) The emission rate for the preceding 12-month period (or preceding 6-month period for the first 6-month determination) exceeded the applicable limit in § 61.162(a)(1) or (b)(1).

(ii) The emission rate for the forthcoming 12-month period will exceed the applicable limit in § 61.162(a)(1) or (b)(1). In this case, the owner or operator shall also notify the Administrator of the anticipated date of the emission test to demonstrate compliance with the applicable limit in § 61.162(a)(2) or (b)(2).

(5) Ensure that the reports required in paragraph (d)(4) of this section are postmarked by the tenth day following the end of the 6-month reporting period.

(e) To obtain approval to bypass a control device, as provided in § 61.162(c), an owner or operator of a source subject to this subpart may make written application to the Administrator. Each application for such a waiver shall be submitted to the Administrator no later than 60 days before the bypass period would begin and shall include:

(1) Name and address of the owner or operator;

(2) Location of the source;

(3) A brief description of the nature, size, design, and method of operation of the source;

(4) The reason it is necessary to bypass the control device;

(5) The length of time it will be necessary to by-pass the control device;

(6) Steps that will be taken to minimize arsenic emissions during the period the control device will be bypassed.

(7) The quantity of emissions that would be released while the control device is by-passed if no steps were taken to minimize emissions;

(8) The expected reduction in emissions during the by-pass period due to the steps taken to minimize emissions during this period; and

(9) The type of glass to be produced during the bypass period, and, if applicable, an explanation of why non-arsenic or lower-arsenic-containing glass cannot be melted in the furnace during the bypass period.

(f) Each owner or operator required to install and operate a continuous opacity monitoring system under § 61.163 shall:

(1) Submit a written report to the Administrator of the results of the continuous monitoring system evaluation required under § 61.163(b) within 60 days after conducting the evaluation.

(2) Submit a written report to the Administrator every 6 months if excess opacity occurred during the preceding 6-month period. For purposes of this paragraph, an occurrence of excess opacity is any 6-minute period during which the average opacity, as measured by the continuous monitoring system, exceeds the opacity level determined under § 61.163(c)(3) or the opacity level redetermined under § 61.163(d).

(3) Ensure that any semiannual report of excess opacity required by paragraph (f)(2) of this section is postmarked by the thirtieth day following the end of the 6-month period and includes the following information:

(i) The magnitude of excess opacity, any conversion factor(s) used, and the date and time of commencement and completion of each occurrence of excess opacity.

(ii) Specific identification of each occurrence of excess opacity that occurs during startups, shutdowns, and malfunctions of the source.

(iii) The date and time identifying each period during which the continuous monitoring system was inoperative, except for zero and span checks, and the nature of the system repairs or adjustments.

[51 FR 28025, Aug. 4, 1986, as amended at 65 FR 62158, Oct. 17, 2000]

Subpart O—National Emission Standard for Inorganic Arsenic Emissions From Primary Copper Smelters

SOURCE: 51 FR 28029, Aug. 4, 1986, unless otherwise noted.

§61.170 Applicability and designation of source.

The provisions of this subpart are applicable to each copper converter at any new or existing primary copper smelter, except as noted in §61.172(a).

§61.171 Definitions.

All terms used in this subpart shall have the meanings given to them in the Act, in subpart A of part 61, and in this section as follows:

Blowing means the injection of air or oxygen-enriched air into a molten converter bath.

Charging means the addition of a molten or solid material to a copper converter.

Control device means the air pollution control equipment used to collect particulate matter emissions.

Converter arsenic charging rate means the hourly rate at which arsenic is charged to the copper converters in the copper converter department based on the arsenic content of the copper matte and of any lead matte that is charged to the copper converters.

Copper converter means any vessel in which copper matte is charged and is oxidized to copper.

Copper converter department means all copper converters at a primary copper smelter.

Copper matte means any molten solution of copper and iron sulfides produced by smelting copper sulfide ore concentrates or calcines.

Holding of a copper converter means suspending blowing operations while maintaining in a heated state the molten bath in the copper converter.

Inorganic arsenic means the oxides and other noncarbon compounds of the element arsenic included in particulate matter, vapors, and aerosols.

Lead matte means any molten solution of copper and other metal sulfides produced by reduction of sinter product from the oxidation of lead sulfide ore concentrates.

Malfunction means any sudden failure of air pollution control equipment or process equipment or of a process to operate in a normal or usual manner so that emissions of inorganic arsenic are increased.

Opacity means the degree to which emissions reduce the transmission of light.

Particulate matter means any finely divided solid or liquid material, other than uncombined water, as measured by the specified reference method.

Pouring means the removal of blister copper from the copper converter bath.

Primary copper smelter means any installation or intermediate process engaged in the production of copper from copper-bearing materials through the use of pyrometallurgical techniques.

Primary emission control system means the hoods, ducts, and control devices used to capture, convey, and collect process emissions.

Process emissions means inorganic arsenic emissions from copper converters that are captured directly at the source of generation.

Secondary emissions means inorganic arsenic emissions that escape capture by a primary emission control system.

Secondary hood system means the equipment (including hoods, ducts, fans, and dampers) used to capture and transport secondary inorganic arsenic emissions.

Shutdown means the cessation of operation of a stationary source for any reason.

Skimming means the removal of slag from the molten converter bath.

§ 61.172 Standard for new and existing sources.

(a) The provisions of paragraphs (b)–(f) of this section do not apply to any copper converter at a facility where the total arsenic charging rate for the copper converter department averaged over a 1-year period is less than 75 kg/hr (165 lb/hr), as determined under § 61.174(f).

(b) The owner or operator of each copper converter subject to the provisions of this subpart shall reduce inorganic arsenic emissions to the atmosphere by meeting the following design, equipment, work practice, and operational requirements:

(1) Install, operate, and maintain a secondary hood system on each copper converter. Each secondary hood system shall consist of a hood enclosure, air curtain fan(s), exhaust system fan(s), and ductwork that conveys the captured emissions to a control device, and shall meet the following specifications:

(i) The configuration and dimensions of the hood enclosure shall be such that the copper converter mouth, charging ladles, skimming ladles, and any other material transfer vessels used will be housed within the confines or influence of the hood enclosure during each mode of copper converter operation.

(ii) The back of the hood enclosure shall be fully enclosed and sealed against the primary hood. Portions of the side-walls in contact with the copper converter shall be sealed against the converter.

(iii) Openings in the top and front of the hood enclosure to allow for the entry and egress of ladles and crane appartus shall be minimized to the fullest extent practicable.

(iv) The hood enclosure shall be fabricated in such a manner and of materials of sufficient strength to withstand incidental contact with ladles and crane apparatus with no significant damage.

(v) One side-wall of the hood enclosure shall be equipped with a horizontal-slotted plenum along the top, and the opposite side-wall shall be equipped with an exhaust hood. The horizontal-slotted plenum shall be designed to allow the distance from the base to the top of the horizontal slot to be adjustable up to a dimension of 76 mm.

(vi) The horizontal-slotted plenum shall be connected to a fan. When activated, the fan shall push air through the horizontal slot, producing a horizontal air curtain above the copper converter that is directed to the exhaust hood. The fan power output installed shall be sufficient to overcome static pressure losses through the ductwork upstream of the horizontal-slotted plenum and across the plenum, and to deliver at least 22,370 watts (30 air horsepower) at the horizontal-slotted plenum discharge.

(vii) The exhaust hood shall be sized to completely intercept the airstream from the horizontal-slotted plenum combined with the additional airflow resulting from entrainment of the surrounding air. The exhaust hood shall be connected to a fan. When activated, the fan shall pull the combined airstream into the exhaust hood.

(viii) The entire secondary hood system shall be equipped with dampers and instrumentation, as appropriate, so that the desired air curtain and exhaust flow are maintained during each mode of copper converter operation.

(2) Optimize the capture of secondary inorganic arsenic emissions by operating the copper converter and secondary hood system at all times as follows:

(i) *Copper converter.* (A) Increase the air curtain and exhaust flow rates to their optimum conditions prior to raising the primary hood and rolling the copper converter out for charging, skimming, or pouring.

(B) Once rolled out, prior to the commencement of skimming or pouring, hold the copper converter in an idle position until fuming from the molten bath has been minimized.

(C) During skimming, raise the receiving ladle off the ground and position the ladle as close to the copper converter mouth as possible to minimize the drop distance between the converter mouth and the receiving ladle.

(D) Control the rate of flow into the receiving ladle to the extent practicable to minimize fuming.

(E) Upon the completion of each charge, withdraw the charging ladle or vessel used from the confines of the secondary hood in a slow, deliberate manner.

(F) During charging, skimming, or pouring, ensure that the crane block does not disturb the air flow between the horizontal-slotted plenum and the exhaust hood.

(ii) *Secondary hood system.* (A) Operate the secondary hood system under conditions that will result in the maximum capture of inorganic arsenic emissions.

(B) Within 30 days after the effective date of this subpart, or within 30 days after the initial operation of each secondary hood system, whichever comes later, provide to the Administrator a list of operating conditions for the secondary hood system that will result in the maximum capture of inorganic arsenic emissions. This list shall specify the operating parameters for the following:

(*1*) The dimensions of the horizontal slot.

(*2*) The velocity of air through the horizontal slot during each mode of converter operation.

(*3*) The distance from the horizontal slot to the exhaust hood.

(*4*) The face velocity at the opening of the exhaust hood during each mode of converter operation.

(C) Operate the secondary hood system under the conditions listed in paragraph (b)(2)(ii)(B) of this section, unless otherwise specified by the Administrator.

(D) Notify the Administrator in writing within 30 days if there is any change in the operating conditions submitted pursuant to the requirements of paragraph (b)(2)(ii)(B) that will result in any reduction in the maximum capture of inorganic arsenic emissions.

(3) Comply with the following inspection and maintenance requirements after installing the secondary hood system required in paragraph (b)(1) of this section:

(i) At least once every month, visually inspect the components of the secondary hood system that are exposed to potential damage from crane and ladle operation, including the hood enclosure, side- and back-wall hood seals, and the horizontal slot.

(ii) Replace or repair any defective or damaged components of the secondary hood system within 30 days after discovering the defective or damaged components.

(c) No owner or operator of a copper converter subject to the provisions of this subpart shall cause or allow to be discharged into the atmosphere any copper converter secondary emissions that exit from a control device and contain particulate matter in excess of 11.6 mg/dscm (0.0051 gr/dscf).

(d) The owner or operator of a copper converter subject to the provisions of this subpart shall submit a description of a plan for control of inorganic arsenic emissions from the copper converter and associated air pollution control equipment. This plan shall be submitted within 90 days after the effective date of this subpart, unless a waiver of compliance is granted under §61.11. If a waiver of compliance is granted, the plan shall be submitted on a date set by the Administrator. Approval of the plan will be granted by the Administrator provided he finds that:

(1) It includes a systematic procedure for identifying malfunctions and for reporting them immediately to smelter supervisory personnel.

(2) It specifies the procedures that will be followed to ensure that equipment or process breakdowns due entirely or in part to poor maintenance or other preventable conditions do not occur.

(3) It specifies the measures that will be taken to ensure compliance with paragraph (b)(2) of this section.

(e) The owner or operator shall implement the plan required under paragraph (d) of this section unless otherwise specified by the Administrator.

(f) At all times, including periods of startup, shutdown, and malfunction, the owner or operator of a copper converter subject to the provisions of this subpart shall operate and maintain the converter and associated air pollution control equipment in a manner consistent with good air pollution control practice for minimizing emissions of inorganic arsenic to the atmosphere to

the maximum extent practicable. Determination of whether acceptable operating and maintenance procedures are being used will be based on information available to the Administrator, which may include, but is not limited to, monitoring results, review of operating and maintenance procedures, inspection of the source, and review of other records.

[51 FR 28029, Aug. 4, 1986, as amended at 65 FR 62158, Oct. 17, 2000]

§ 61.173 Compliance provisions.

(a) The owner or operator of each copper converter to which §61.172(b)—(f) applies shall demonstrate compliance with the requirements of §61.172(b)(1) as follows:

(1) The owner or operator of each existing copper converter shall install a secondary hood system to meet the requirements of §61.172(b)(1) no later than 90 days after the effective date, unless a waiver of compliance has been approved by the Administrator in accordance with §61.11.

(2) The owner or operator of each new copper converter shall install a secondary hood system to meet the requirements of §61.172(b)(1) prior to the initial startup of the converter, except that if startup occurs prior to the effective date, the owner or operator shall meet the requirements of §61.172(b)(1) on the effective date.

§ 61.174 Test methods and procedures.

(a) To determine compliance with §61.172(c), the owner or operator shall conduct emission tests and reduce the test data in accordance with the test methods and procedures contained in this section unless the Administrator:

(1) Specifies or approves, in specific cases, the use of a reference method with minor changes in methodology,

(2) Approves the use of an equivalent method,

(3) Approves the use of an alternative method, the results of which he has determined to be adequate for indicating whether a specific source is in compliance, or

(4) Waives the requirement for emission tests as provided in §61.13.

(b) The owner or operator shall conduct the emission tests required in paragraph (a) of this section:

(1) After achieving the optimum operating conditions submitted under §60.172(b)(2)(ii)(B) for the equipment required in §61.172(b)(1), but no later than 90 days after the effective date of this subpart in the case of an existing copper converter or a copper converter that has an initial startup date preceding the effective date, or

(2) After achieving the optimum operating conditions submitted under §60.172(b)(2)(ii)(B) for the equipment required in §61.172(b)(1), but no later than 90 days after startup in the case of a new copper converter, initial startup of which occurs after the effective date, or

(3) At such other times as may be required by the Administrator under section 114 of the Act.

(c) The owner or operator shall conduct each emission test under representative operating conditions and at sample locations subject to the Administrator's approval, and shall make available to the Administrator such records as may be necessary to determine the conditions of the emission test.

(d) For the purpose of determining compliance with §61.172(c), the owner or operator shall use reference methods in 40 CFR part 60, appendix A, as follows:

(1) Method 5 for the measurement of particulate matter,

(2) Method 1 for sample and velocity traverses,

(3) Method 2 for velocity and volumetric flow rate,

(4) Method 3 for gas analysis, and

(5) Method 4 for stack gas moisture.

(e) For Method 5, the sampling time for each run shall be at least 60 minutes and the minimum sampling volume shall be 0.85 dscm (30 dscf) except that smaller times or volumes when necessitated by process variables or other factors may be approved by the Administrator.

(f) For the purpose of determining applicability under §61.172(a), the owner or operator shall determine the converter arsenic charging rate as follows:

(1) Collect daily grab samples of copper matte and any lead matte charged to the copper converters.

(2) Each calendar month, from the daily grab samples collected under

paragraph (f)(1) of this section, put together a composite copper matte sample and a composite lead matte sample. Analyze the composite samples individually using Method 108A, 108B, or 108C to determine the weight percent of inorganic arsenic contained in each sample.

(3) Calculate the converter arsenic charging rate once per month using the following equation:

$$R_c = \sum_{i=1}^{n} \frac{A_c W_{ci} + A_l W_{li}}{100\ H_c}$$

Where:

R_c is the converter arsenic charging rate, kg/hr (lb/hr).

A_c is the monthly average weight percent of arsenic in the copper matte charged during the month(%) as determined under paragraph (f)(2) of this section.

A_l is the monthly average weight percent of arsenic in the lead matte charged during the month(%) as determined under paragraph (f)(2) of this section.

W_{ci} is the total rate of copper matte charged to a copper converter during the month, kg (lb).

W_{li} is the total rate of lead matte charged to a copper converter during the month, kg (lb).

H_c is the total number of hours the copper converter department was in operation during the month (hr).

n is the number of copper converters in operation during the month.

(4) Determine an annual arsenic charging rate for the copper converter department once per month by computing the arithmetic average of the 12 monthly converter arsenic charging rate values (R_c) for the preceding 12-month period.

(g) An owner or operator may petition the Administrator for a modified sampling and analysis schedule if analyses performed for the first 12-month period after the effective date show the source to be considerably below the applicability limit prescribed in §61.172(a).

[51 FR 28029, Aug. 4, 1986, as amended at 55 FR 22027, May 31, 1990; 65 FR 62158, Oct. 17, 2000]

§61.175 Monitoring requirements.

(a) Each owner or operator of a source that is subject to the emission limit specified in §61.172(c) shall install, calibrate, maintain, and operate a continuous monitoring system for the measurement of the opacity of emissions discharged from the control device according to the following procedures:

(1) Ensure that each system is installed and operational no later than 90 days after the effective date of this subpart for a source that has an initial startup date preceding the effective date; and no later than 90 days after startup for other sources. Verification of the operational status shall, as a minimum, consist of an evaluation of the monitoring system in accordance with the requirements and procedures contained in Performance Specification 1 of appendix B of 40 CFR part 60.

(2) Comply with the provisions of §60.13(d) of 40 CFR part 60.

(3) Except for system breakdowns, repairs, calibration checks, and zero span adjustments, ensure that each continuous monitoring system is in continuous operation and meets frequency of operation requirements by completing a minimum of one cycle of sampling and analysis for each successive 10-second period and one cycle of data recording for each successive 6-minute period. Each data point shall represent the opacity measured for one cycle of sampling and analysis and shall be expressed as percent opacity.

(b) Except as required in paragraph (c) of this section, calculate 1-hour opacity averages from 360 or more consecutive data points equally spaced over each 1-hour period. Data recorded during periods of monitoring system breakdowns, repairs, calibration checks, and zero and span adjustments shall not be included in the data averages computed under this paragraph.

(c) No later than 60 days after each continuous opacity monitoring system required in paragraph (a) of this section becomes operational, the owner or operator shall establish a reference opacity level for each monitored emission stream according to the following procedures:

(1) Conduct continuous opacity monitoring over a preplanned period of not less than 36 hours during which the processes and emission control equipment upstream of the monitoring system are operating under representative

operating conditions subject to the Administrator's approval. This period shall include the time during which the emission test required by § 61.13 is conducted.

(2) Calculate 6-minute averages of the opacity readings using 36 or more consecutive data points equally spaced over each 6-minute period.

(3) Calculate 1-hour average opacity values using 10 successive 6-minute average opacity values (i.e., calculate a new 1-hour average opacity value every 6 minutes). Determine the highest 1-hour average opacity value observed during the 36-hour preplanned test period.

(4) Calculate the reference opacity level by adding 5 percent opacity to the highest 1-hour average opacity calculated in paragraph (c)(3) of this section.

(d) The owner or operator may redetermine the reference opacity level for the copper converter secondary emission stream at the time of each emission test that demonstrates compliance with the emission limit required in § 61.172(c) according to the provisions of paragraphs (c)(1) through (c)(4) of this section.

(e) With a minimum of 30 days prior notice, the Administrator may require the owner or operator to redetermine the reference opacity level for any monitored emission stream.

(f) Each owner or operator who is required to install the equipment specified in § 61.172(b)(1) for the capture of secondary copper converter emissions shall install, calibrate, maintain, and operate a continuous monitoring device on each secondary hood system for the measurement of the air flow through the horizontal-slotted plenum and through the exhaust hood. Each device shall be installed and operational no later than 90 days after the effective date of this subpart for a source that has an initial startup preceding the effective date; and no later than 90 days after startup for other sources.

(g) Each owner or operator subject to the requirements in paragraph (f) of this section shall establish for each secondary hood system reference air flow rates for the horizontal-slotted plenum and exhaust hood for each mode of converter operation. The reference flow rates shall be established when the equipment is operating under the optimum operating conditions required in § 61.172(b)(2)(ii).

(h) Each owner or operator shall install the continuous monitoring systems and monitoring devices required in paragraphs (a) and (f) of this section in such a manner that representative measurements of emissions and process parameters are obtained.

§ 61.176 Recordkeeping requirements.

(a) Each owner or operator subject to the requirements of § 61.172(b)(1) shall maintain at the source for a period of at least 2 years records of the visual inspections, maintenance, and repairs performed on each secondary hood system as required in § 61.172(b)(3).

(b) Each owner or operator subject to the provisions of § 61.172(c) shall maintain at the source for a period of at least 2 years and make available to the Administrator upon request a file of the following records:

(1) All measurements, including continuous monitoring for measurement of opacity;

(2) Records of emission test data and all calculations used to produce the required reports of emission estimates to demonstrate complaince with § 61.172(c);

(3) All continuous monitoring system performance evaluations, including calibration checks and adjustments;

(4) The occurrence and duration of all startups, shutdowns, and malfunctions of the copper converters;

(5) All malfunctions of the air pollution control system;

(6) All periods during which any continuous monitoring system or device is inoperative;

(7) All maintenance and repairs performed on each air pollution control system, continuous monitoring system, or monitoring device;

(8) All records of 1-hour average opacity levels for each separate control device; and

(9) For each secondary hood system:

(i) The reference flow rates for the horizontal-slotted plenum and exhaust hood for each converter operating mode estabilshed under § 61.175(g);

(ii) The actual flow rates; and

(iii) A daily log of the start time and duration of each converter operating mode.

(c) Each owner or operator subject to the provisions of this subpart shall maintain at the source for a period of at least 2 years and make available to the Administrator upon request the following records:

(1) For each copper converter, a daily record of the amount of copper matte and lead matte charged to the copper converter and the total hours of operation.

(2) For each copper converter department, a monthly record of the weight percent of arsenic contained in the copper matte and lead matte as determined under §61.174(f).

(3) For each copper converter department, the monthly calculations of the average annual arsenic charging rate for the preceding 12-month period as determined under §61.174(f).

§61.177 Reporting requirements.

(a) Each owner or operator subject to the provisions of §61.172(c) shall:

(1) Provide the Administrator 30 days prior notice of the emission test required in §61.174(a) to afford the Administrator the opportunity to have an observer present; and

(2) Submit to the Administrator a written report of the results of the emission test required in §61.174(a) within 60 days after conducting the test.

(b) Each owner or operator subject to the provisions of §61.175(a) shall provide the Administrator at least 30 days prior notice of each reference opacity level determination required in §61.175(c) to afford the Administrator the opportunity to have an observer present.

(c) Each owner or opertor subject to the provisions of §61.175(a) shall submit to the Administrator:

(1) Within 60 days after conducting the evaluation required in §61.175(a)(1), a written report of the continuous monitoring system evaluation;

(2) Within 30 days after establishing the reference opacity level required in §61.175(c), a written report of the reference opacity level. The report shall also include the opacity data used and the calculations performed to determine the reference opacity level, and sufficient documentation to show that process and emission control equipment were operating normally during the reference opacity level determination; and

(3) A written report each quarter of each occurrence of excess opacity during the quarter. For purposes of this paragraph, an occurrence of excess opacity is any 1-hour period during which the average opacity, as measured by the continuous monitoring system, exceeds the reference opacity level established under §61.175(c).

(d) The owner or operator subject to the provisions of §61.175(g) shall submit to the Administrator:

(1) A written report of the reference air flow rate within 30 days after establishing the reference air flow rates required in §61.175(g);

(2) A written report each quarter of all air flow rates monitored during the preceding 3-month period that are less than 80 percent of the corresponding reference flow rate established for each converter operating mode; and

(3) A written report each quarter of any changes in the operating conditions of the emission capture system, emission control device, or the building housing the converters that might increase fugitive emissions.

(e) All quarterly reports shall be postmarked by the 30th day following the end of each 3-month period and shall include the following information:

(1) The magnitude of each occurrence of excess opacity, any conversion factor(s) used, and the dates and times of commencement and completion of each occurrence of excess opacity, the cause of each exceedance of the reference opacity level, and the measures taken to minimize emissions.

(2) The magnitude of each occurrence of reduced flow rate and the date and time of commencement and completion of each occurrence of reduced flow rate, the cause of the reduced flow rate, and the associated converter operating mode.

(3) Specific identification of each occurrence of excess opacity or reduced flow rate that occurs during startups, shutdowns, and malfunctions of the source.

(4) The date and time identifying each period during which the continuous monitoring system or monitoring device was inoperative, except for zero and span checks, and the nature of the system repairs or adjustments.

(5) Specific identification of each change in operating conditions of the emission capture system or control device, or in the condition of the building housing the converters.

(f) Each owner or operator of a source subject to the provisions of this subpart shall submit annually a written report to the Administrator that includes the monthly computations of the average annual converter arsenic charging rate as calculated under § 61.174(f)(4). The annual report shall be postmarked by the 30th day following the end of each calendar year.

Subpart P—National Emission Standard for Inorganic Arsenic Emissions From Arsenic Trioxide and Metallic Arsenic Production Facilities

SOURCE: 51 FR 28033, Aug. 4, 1986, unless otherwise noted.

§ 61.180 Applicability and designation of sources.

The provisions of this subpart are applicable to each metallic arsenic production plant and to each arsenic trioxide plant that processes low-grade arsenic bearing materials by a roasting condensation process.

§ 61.181 Definitions.

All terms used in this subpart shall have the meanings given them in the Act, in subpart A of part 61, and in this section as follows:

Arsenic kitchen means a baffled brick chamber where inorganic arsenic vapors are cooled, condensed, and removed in a solid form.

Control device means the air pollution control equipment used to collect particulate matter emissions.

Curtail means to cease operations to the extent technically feasible to reduce emissions.

Inorganic arsenic means the oxides and other noncarbon compounds of the element arsenic included in particulate matter, vapors, and aerosols.

Malfunction means any sudden failure of air pollution control equipment or process equipment or of a process to operate in a normal or usual manner so that emissions of inorganic arsenic are increased.

Opacity means the degree to which emissions reduce the transmission of light.

Primary emission control system means the hoods, enclosures, ducts, and control devices used to capture, convey, and remove particulate matter from exhaust gases which are captured directly at the source of generation.

Process emissions means inorganic arsenic emissions that are captured and collected in a primary emission control system.

Roasting means the use of a furnace to heat arsenic plant feed material for the purpose of eliminating a significant portion of the volatile materials contained in the feed.

Secondary emissions means inorganic arsenic emissions that escape capture by a primary emission control system.

Shutdown means the cessation of operation of a stationary source for any purpose.

[51 FR 28033, Aug. 4, 1986; 51 FR 35355, Oct. 3, 1986]

§ 61.182 Standard for new and existing sources.

(a) Within 30 days after the effective date of this subpart, the owner or operator of each source to which this subpart applies shall identify and submit to the Administrator a list of potential sources (equipment and operations) of inorganic arsenic emissions.

(b) The owner or operator shall submit a description of an inspection, maintenance, and housekeeping plan for control of inorganic arsenic emissions from the potential sources identified under paragraph (a) of this section. This plan shall be submitted within 90 days after the effective date of this subpart, unless a waiver of compliance is granted under § 61.11. If a waiver of compliance is granted, the plan shall be submitted on a date set by the Administrator. Approval of the plan will be granted by the Administrator provided he finds that:

(1) It achieves the following objectives in a manner that does not cause adverse impacts in other environmental media:

(i) Clean-up and proper disposal, wet-down, or chemical stabilization to the extent practicable (considering access and safety) of any dry, dusty material having an inorganic arsenic content greater than 2 percent that accumulates on any surface within the plant boundaries outside of a dust-tight enclosure.

(ii) Immediate clean-up and proper disposal, wet-down, or chemical stabilization of spills of all dry, dusty material having an inorganic arsenic content greater than 2 percent.

(iii) Minimization of emissions of inorganic arsenic to the atmosphere during removal of inorganic arsenic from the arsenic kitchen and from flue pulling operations by properly handling, wetting down, or chemically stabilizing all dusts and materials handled in these operations.

(2) It includes an inspection program that requires all process, conveying, and air pollution control equipment to be inspected at least once per shift to ensure that the equipment is being properly operated and maintained. The program will specify the evaluation criteria and will use a standardized checklist, which will be included as part of the plan required in paragraph (b) of this section, to document the inspection, maintenance, and housekeeping status of the equipment and that the objectives of paragraph (b)(1) of this section are being achieved.

(3) It includes a systematic procedure for identifying malfunctions and for reporting them immediately to supervisory personnel.

(4) It specifies the procedures that will be followed to ensure that equipment or process malfunctions due entirely or in part to poor maintenance or other preventable conditions do not occur.

(5) It includes a program for curtailing all operations necessary to minimize any increase in emissions of inorganic arsenic to the atmosphere resulting from a malfunction. The program will describe:

(i) The specific steps that will be taken to curtail each operation as soon as technically feasible after the malfunction is discovered.

(ii) The minimum time required to curtail each operation.

(iii) The procedures that will be used to ensure that the curtailment continues until after the malfunction is corrected.

(c) The owner or operator shall implement the plan required in paragraph (b) of this section until otherwise specified by the Administrator.

(d) At all times, including periods of startup, shutdown, and malfunction, the owner or operator of each source to which this subpart applies shall operate and maintain the source including associated air pollution control equipment in a manner consistent with good air pollution control practice for minimizing emissions of inorganic arsenic to the atmosphere to the maximum extent practicable. Determination of whether acceptable operating and maintenance procedures are being used will be based on information available to the Administrator, which may include, but is not limited to, monitoring results, review of operating and maintenance procedures, inspection of the source, and review of other records.

§61.183 Emission monitoring.

(a) The owner or operator of each source subject to the provisions of this subpart shall install, calibrate, maintain, and operate a continuous monitoring system for the measurement of the opacity of each arsenic trioxide and metallic arsenic process emission stream that exits from a control device.

(b) The owner or operator shall install, operate, and maintain each continuous monitoring system for the measurement of opacity required in paragraph (a) of this section according to the following procedures:

(1) Ensure that each system is installed and operational no later than 90 days after the effective date of this subpart for an existing source or a new source that has an initial startup date preceding the effective date. For a new source whose initial startup occurs after the effective date of this subpart, ensure that the system is installed and operational no later than 90 days after startup. Verification of the operational

status shall, as a minimum, consist of an evaluation of the monitoring system in accordance with the requirements and procedures contained in Performance Specification 1 of appendix B of 40 CFR part 60.

(2) Comply with the provisions of § 60.13(d) of 40 CFR part 60.

(3) Except for system breakdowns, repairs, calibration checks, and zero and span adjustments required under § 60.13(d), ensure that each continuous monitoring system is in continuous operation and meets frequency of operation requirements by completing a minimum of one cycle of sampling and analysis for each successive 10-second period and one cycle of data recording for each successive 6-minute period. Each data point shall represent the opacity measured for one cycle of sampling and analysis and shall be expressed as percent opacity.

(c) The owner or operator shall calculate 6-minute opacity averages from 36 or more consecutive data points equally spaced over each 6-minute period. Data recorded during periods of monitoring system breakdowns, repairs, calibration checks, and zero and span adjustments shall not be included in the data averages computed under this paragraph.

(d) No later than 60 days after each continuous opacity monitoring system required in paragraph (a) of this section becomes operational, the owner or operator shall establish a reference opacity level for each monitored emission stream according to the following procedures:

(1) Conduct continuous opacity monitoring over a preplanned period of not less than 36 hours during which the processes and emission control equipment upstream of the monitoring system are operating in a manner that will minimize opacity under representative operating conditions subject to the Administrator's approval.

(2) Calculate 6-minute averages of the opacity readings using 36 or more consecutive data points equally spaced over each 6-minute period.

(3) Establish the reference opacity level by determining the highest 6-minute average opacity calculated under paragraph (d)(2) of this section.

(e) With a minimum of 30 days prior notice, the Administrator may require an owner or operator to redetermine the reference opacity level for any monitored emission stream.

(f) Each owner or operator shall install all continuous monitoring systems or monitoring devices required in paragraph (a) of this section in such a manner that representative measurements of emissions or process parameters are obtained.

§ 61.184 Ambient air monitoring for inorganic arsenic.

(a) The owner or operator of each source to which this subpart applies shall operate a continuous monitoring system for the measurement of inorganic arsenic concentrations in the ambient air.

(b) The ambient air monitors shall be located at sites to detect maximum concentrations of inorganic arsenic in the ambient air in accordance with a plan approved by the Administrator that shall include the sampling and analytical method used.

(c) The owner or operator shall submit a written plan describing, and explaining the basis for, the design and adequacy of the monitoring network, sampling and analytical procedures, and quality assurance within 45 days after the effective date of this subpart.

(d) Each monitor shall be operated continuously except for a reasonable time allowance for instrument maintenance and calibration, for changing filters, or for replacement of equipment needing major repair.

(e) Filters shall be changed daily and shall be analyzed and concentrations calculated within 30 days after filters are collected.

(f) The Administrator at any time may require changes in, or expansion of, the sampling program, including sampling and analytical protocols and network design.

§ 61.185 Recordkeeping requirements.

(a) Each owner or operator of a source subject to the provisions of this subpart shall maintain at the source for a period of at least 2 years the following records: All measurements, including continuous monitoring for

measurement of opacity; all continuous monitoring system performance evaluations, including calibration checks and adjustments; all periods during which the continuous monitoring system or monitoring device is inoperative; and all maintenance and repairs made to the continuous monitoring system or monitoring device.

(b) Each owner or operator shall maintain at the source for a period of at least 2 years a log for each plant department in which the operating status of process, conveying, and emission control equipment is described for each shift. For malfunctions and upsets, the following information shall be recorded in the log:

(1) The time of discovery.

(2) A description of the malfunction or upset.

(3) The time corrective action was initiated.

(4) A description of corrective action taken.

(5) The time corrective action was completed.

(6) A description of steps taken to reduce emissions of inorganic arsenic to the atmosphere between the time of discovery and the time corrective action was taken.

(c) Each owner or operator subject to the provisions of this subpart shall maintain for a period of a least 2 years records of 6-minute average opacity levels for each separate control device.

(d) Each owner or operator subject to the provisions of §61.186 shall maintain for a period of at least 2 years records of ambient inorganic arsenic concentrations at all sampling sites and other data needed to determine such concentrations.

§61.186 Reporting requirements.

(a) Each owner or operator subject to the provisions of §61.183(a) shall provide the Administrator at least 30 days prior notice of each reference opacity level determination required in §61.183(a) to afford the Administrator the opportunity to have an observer present.

(b) Each owner or operator subject to the provisions of §61.183(a) shall submit to the Administrator:

(1) Within 60 days of conducting the evaluation required in §61.183(b)(1), a written report of the continuous monitoring system evaluation;

(2) Within 30 days of establishing the reference opacity level required in §61.183(d), a written report of the reference opacity level. The report shall also include the opacity data used and the calculations performed to determine the reference opacity level, and sufficient documentation to show that process and emission control equipment were operating normally during the reference opacity level determination; and

(3) A written report each quarter of each occurrence of excess opacity during the quarter. For the purposes of this paragraph, an occurrence of excess opacity is any 6-minute period during which the average opacity, as measured by the continuous monitoring system, exceeds the reference opacity level established under §61.183(d).

(c) All quarterly reports of excess opacity shall be postmarked by the 30th day following the end of each quarter and shall include the following information:

(1) The magnitude of excess opacity, any conversion factor(s) used, and the dates and times of commencement and completion of each occurrence of excess opacity, the cause of each exceedance of the reference opacity level, and the measures taken to minimize emissions.

(2) Specific identification of each period of excess opacity that occurred during startups, shutdowns, and malfunctions of the source.

(3) The date and time identifying each period during which the continuous monitoring system or monitoring device was inoperative, except for zero and span checks, and the nature of the system repairs or adjustments.

(d) Each owner or operator subject to this subpart shall submit a written report semiannually to the Administrator that describes the status and results, for the reporting period, of any pilot plant studies on alternative arsenic trioxide production processes. Conclusions and recommendations of the studies shall also be reported.

(e) All semiannual progress reports required in paragraph (d) of this section shall be postmarked by the 30th

day following the end of each 6-month period.

(f) Each owner or operator of a source to which this subpart applies shall submit a written report each quarter to the Administrator that includes the following information:

(1) All ambient inorganic arsenic concentrations measured at all monitoring sites in accordance with § 61.184.

(2) A description of any modifications to the sampling network, during the reporting period, including any major maintenance, site changes, calibrations, and quality assurance information including sampling and analytical precision and accuracy estimates.

(g) All quarterly reports required in paragraph (f) of this section shall be postmarked by the 30th day following the end of each quarter.

Subpart Q—National Emission Standards for Radon Emissions From Department of Energy Facilities

SOURCE: 54 FR 51701, Dec. 15, 1989, unless otherwise noted.

§ 61.190 Designation of facilities.

The provisions of this subpart apply to the design and operation of all storage and disposal facilities for radium-containing material (i.e., byproduct material as defined under section 11.e(2) of the Atomic Energy Act of 1954 (as amended)) that are owned or operated by the Department of Energy that emit radon-222 into air, including these facilities: The Feed Materials Production Center, Fernald, Ohio; the Niagara Falls Storage Site, Lewiston, New York; the Weldon Spring Site, Weldon Spring, Missouri; the Middlesex Sampling Plant, Middlesex, New Jersey; the Monticello Uranium Mill Tailings Pile, Monticello, Utah. This subpart does not apply to facilities listed in, or designated by the Secretary of Energy under title I of the Uranium Mill Tailings Control Act of 1978.

§ 61.191 Definitions.

As used in this subpart, all terms not defined here have the meaning given them in the Clean Air Act or subpart A of part 61. The following terms shall have the following specific meanings:

(a) *Facility* means all buildings, structures and operations on one contiguous site.

(b) *Source* means any building, structure, pile, impoundment or area used for interim storage or disposal that is or contains waste material containing radium in sufficient concentration to emit radon-222 in excess of this standard prior to remedial action.

§ 61.192 Standard.

No source at a Department of Energy facility shall emit more than 20 picocuries per square meter per second (pCi/(m^2-sec)) (1.9 pCi/(ft^2-sec)) of radon-222 as an average for the entire source, into the air. This requirement will be part of any Federal Facilities Agreement reached between Environmental Protection Agency and Department of Energy.

[54 FR 51701, Dec. 15, 1989, as amended at 65 FR 62158, Oct. 17, 2000]

§ 61.193 Exemption from the reporting and testing requirements of 40 CFR 61.10.

All facilities designated under this subpart are exempt from the reporting requirements of 40 CFR 61.10.

Subpart R—National Emission Standards for Radon Emissions From Phosphogypsum Stacks

SOURCE: 57 FR 23317, June 3, 1992, unless otherwise noted.

§ 61.200 Designation of facilities.

The provisions of this subpart apply to each owner or operator of a phosphogypsum stack, and to each person who owns, sells, distributes, or otherwise uses any quantity of phosphogypsum which is produced as a result of wet acid phosphorus production or is removed from any existing phosphogypsum stack.

§ 61.201 Definitions.

As used in this subpart, all terms not defined here have the meaning given them in the Clean Air Act or subpart A of part 61. The following terms shall have the following specific meanings:

(a) *Inactive stack* means a stack to which no further routine additions of phosphogypsum will be made and which is no longer used for water management associated with the production of phosphogypsum. If a stack has not been used for either purpose for two years, it is presumed to be inactive.

(b) *Phosphogypsum* is the solid waste byproduct which results from the process of wet acid phosphorus production.

(c) *Phosphogypsum stacks* or *stacks* are piles of waste resulting from wet acid phosphorus production, including phosphate mines or other sites that are used for the disposal of phosphogypsum.

§61.202 Standard.

Each person who generates phosphogypsum shall place all phosphogypsum in stacks. Phosphogypsum may be removed from a phosphogypsum stack only as expressly provided by this subpart. After a phosphogypsum stack has become an inactive stack, the owner or operator shall assure that the stack does not emit more than 20 pCi/(m^2-sec) (1.9 pCi/(ft^2-sec)) of radon-222 into the air.

[57 FR 23317, June 3, 1992, as amended at 65 FR 62158, Oct. 17, 2000]

§61.203 Radon monitoring and compliance procedures.

(a) Within sixty days following the date on which a stack becomes an inactive stack, or within ninety days after the date on which this subpart first took effect if a stack was already inactive on that date, each owner or operator of an inactive phosphogypsum stack shall test the stack for radon-222 flux in accordance with the procedures described in 40 CFR part 61, appendix B, Method 115. EPA shall be notified at least 30 days prior to each such emissions test so that EPA may, at its option, observe the test. If meteorological conditions are such that a test cannot be properly conducted, then the owner or operator shall notify EPA and test as soon as conditions permit.

(b)(1) Within ninety days after the testing is required, the owner or operator shall provide EPA with a report detailing the actions taken and the results of the radon-222 flux testing. Each report shall also include the following information:

(i) The name and location of the facility;

(ii) A list of the stacks at the facility including the size and dimensions of each stack;

(iii) The name of the person responsible for the operation of the facility and the name of the person preparing the report (if different);

(iv) A description of the control measures taken to decrease the radon flux from the source and any actions taken to insure the long term effectiveness of the control measures; and

(v) The results of the testing conducted, including the results of each measurement.

(2) Each report shall be signed and dated by a corporate officer in charge of the facility and contain the following declaration immediately above the signature line: ''I certify under penalty of law that I have personally examined and am familiar with the information submitted herein and based on may inquiry of those individuals immediately responsible for obtaining the information, I believe that the submitted information is true, accurate and complete. I am aware that there are significant penalties for submitting false information including the possibility of fine and imprisonment. See, 18 U.S.C. 1001.''

(c) If the owner or operator of an inactive stack chooses to conduct measurements over a one year period as permitted by Method 115 in appendix B to part 61, within ninety days after the testing commences the owner or operator shall provide EPA with an initial report, including the results of the first measurement period and a schedule for all subsequent measurements. An additional report containing all the information in §61.203(b) shall be submitted within ninety days after completion of the final measurements.

(d) If at any point an owner or operator of a stack once again uses an inactive stack for the disposal of phosphogypsum or for water management, the stack ceases to be in inactive status and the owner or operator must notify EPA in writing within 45 days. When the owner or operator ceases to use the stack for disposal of phosphogypsum or

water management, the stack will once again become inactive and the owner or operator must satisfy again all testing and reporting requirements for inactive stacks.

(e) If an owner or operator removes phosphogypsum from an inactive stack, the owner shall test the stack in accordance with the procedures described in 40 CFR part 61, appendix B, Method 115. The stack shall be tested within ninety days of the date that the owner or operator first removes phosphogypsum from the stack, and the test shall be repeated at least once during each calendar year that the owner or operator removes additional phosphogypsum from the stack. EPA shall be notified at least 30 days prior to an emissions test so that EPA may, at its option, observe the test. If meteorological conditions are such that a test cannot be properly conducted, then the owner shall notify EPA and test as soon as conditions permit. Within ninety days after completion of a test, the owner or operator shall provide EPA with a report detailing the actions taken and the results of the radon-222 flux testing. Each such report shall include all of the information specified by §61.203(b).

§ 61.204 Distribution and use of phosphogypsum for outdoor agricultural purposes.

Phosphogypsum may be lawfully removed from a stack and distributed in commerce for use in outdoor agricultural research and development and agricultural field use if each of the following requirements is satisfied:

(a) The owner or operator of the stack from which the phosphogypsum is removed shall determine annually the average radium-226 concentration at the location in the stack from which the phosphogypsum will be removed, as provided by § 61.207.

(b) The average radium-226 concentration at the location in the stack from which the phosphogypsum will be removed, as determined pursuant to § 61.207, shall not exceed 10 pCi/g (4500 pCi/lb).

(c) All phosphogypsum distributed in commerce for use pursuant to this section by the owner or operator of a phosphogypsum stack shall be accompanied by a certification document which conforms to the requirements of § 61.208(a).

(d) Each distributor, retailer, or reseller who distributes phosphogypsum for use pursuant to this section shall prepare certification documents which conform to the requirements of § 61.208(b).

(e) Use of phosphogypsum for indoor research and development in a laboratory must comply with § 61.205.

[57 FR 23317, June 3, 1992, as amended at 64 FR 5579, Feb. 3, 1999; 65 FR 62158, Oct. 17, 2000]

§ 61.205 Distribution and use of phosphogypsum for indoor research and development.

(a) Phosphogypsum may be lawfully removed from a stack and distributed in commerce for use in indoor research and development activities, provided that it is accompanied at all times by certification documents which conform to the requirements of § 61.208. In addition, before distributing phosphogypsum to any person for use in indoor research and development activities, the owner or operator of a phosphogypsum stack shall obtain from that person written confirmation that the research facility will comply with all of the limitations set forth in paragraph (b) of this section.

(b) Any person who purchases and uses phosphogypsum for indoor research and development purposes shall comply with all of the following limitations. Any use of phosphogypsum for indoor research and development purposes not consistent with the limitations set forth in this section shall be construed as unauthorized distribution of phosphogypsum.

(1) Each quantity of phosphogypsum purchased by a facility for a particular research and development activity shall be accompanied by certification documents which conform to the requirements of § 61.208.

(2) No facility shall purchase or possess more than 3182 kg (7,000 lb) of phosphogypsum for a particular indoor research and development activity. The total quantity of all phosphogypsum at a facility, as determined by summing the individual quantities purchased or possessed for each individual research

and development activity conducted by that facility, may exceed 3182 kg (7,000 lb), provided that no single room in which research and development activities are conducted shall contain more than 3182 kg (7,000 lb).

(3) Containers of phosphogypsum used in indoor research and development activities shall be labeled with the following warning: Caution: Phosphogypsum Contains Elevated Levels of Naturally Occurring Radioactivity.

(4) For each indoor research and development activity in which phosphogypsum is used, the facility shall maintain records which conform to the requirements of §61.209(c).

(5) Indoor research and development activities must be performed in a controlled laboratory setting which the general public cannot enter except on an infrequent basis for tours of the facility. Uses of phosphogypsum for outdoor agricultural research and development and agricultural field use must comply with §61.204.

(c) Phosphogypsum not intended for distribution in commerce may be lawfully removed from a stack by an owner or operator to perform laboratory analyses required by this subpart or any other quality control or quality assurance analyses associated with wet acid phosphorus production.

[57 FR 23317, June 3, 1992, as amended at 64 FR 5579, Feb. 3, 1999; 64 FR 53213, Oct. 1, 1999; 65 FR 62158, Oct. 17, 2000]

§61.206 Distribution and use of phosphogypsum for other purposes.

(a) Phosphogypsum may not be lawfully removed from a stack and distributed or used for any purpose not expressly specified in §61.204 or §61.205 without prior EPA approval.

(b) A request that EPA approve distribution and/or use of phosphogypsum for any other purpose must be submitted in writing and must contain the following information:

(1) The name and address of the person(s) making the request.

(2) A description of the proposed use, including any handling and processing that the phosphogypsum will undergo.

(3) The location of each facility, including suite and/or building number, street, city, county, state, and zip code, where any use, handling, or processing of the phosphogypsum will take place.

(4) The mailing address of each facility where any use, handling, or processing of the phosphogypsum will take place, if different from paragraph (b)(3) of this section.

(5) The quantity of phosphogypsum to be used by each facility.

(6) The average concentration of radium-226 in the phosphogypsum to be used.

(7) A description of any measures which will be taken to prevent the uncontrolled release of phosphogypsum into the environment.

(8) An estimate of the maximum individual risk, risk distribution, and incidence associated with the proposed use, including the ultimate disposition of the phosphogypsum or any product in which the phosphogypsum is incorporated.

(9) A description of the intended disposition of any unused phosphogypsum.

(10) Each request shall be signed and dated by a corporate officer or public official in charge of the facility.

(c) The Assistant Administrator for Air and Radiation may decide to grant a request that EPA approve distribution and/or use of phosphogypsum if he determines that the proposed distribution and/or use is at lease as protective of public health, in both the short term and the long term, as disposal of phosphogypsum in a stack or a mine.

(d) If the Assistant Administrator for Air and Radiation decides to grant a request that EPA approve distribution and/or use of phosphogypsum for a specified purpose, each of the following requirements shall be satisfied:

(1) The owner or operator of the stack from which the phosphogypsum is removed shall determine annually the average radium-226 concentration at the location in the stack from which the phosphogypsum will be removed, as provided by §61.207.

(2) All phosphogypsum distributed in commerce by the owner or operator of a phosphogypsum stack, or by a distributor, retailer, or reseller, or purchased by the end-user, shall be accompanied at all times by certification documents which conform to the requirements §61.208.

(3) The end-user of the phosphogypsum shall maintain records which conform to the requirements of § 61.209(c).

(e) If the Assistant Administrator for Air and Radiation decides to grant a request that EPA approve distribution and/or use of phosphogypsum for a specified purpose, the Assistant Administrator may decide to impose additional terms or conditions governing such distribution or use. In appropriate circumstances, the Assistant Administrator may also decide to waive or modify the recordkeeping requirements established by § 61.209(c).

§ 61.207 Radium-226 sampling and measurement procedures.

(a) Before removing phosphogypsum from a stack for distribution in commerce pursuant to § 61.204, or § 61.206, the owner or operator of a phosphogypsum stack shall measure the average radium-226 concentration at the location in the stack from which phosphogypsum will be removed. Measurements shall be performed for each such location prior to the initial distribution in commerce of phosphogypsum removed from that location and at least once during each calendar year while distribution of phosphogypsum removed from the location continues.

(1) A minimum of 30 phosphogypsum samples shall be taken at regularly spaced intervals across the surface of the location on the stack from which the phosphogypsum will be removed. Let n_1 represent the number of samples taken.

(2) Measure the radium-226 concentration of each of the n_1 samples in accordance with the analytical procedures described in 40 CFR part 61, appendix B, Method 114.

(3) Calculate the mean, $\bar{x}_1$, and the standard deviation, s_1, of the n_1 radium-226 concentrations:

$$\bar{x}_1 = \frac{\sum_{i=1}^{n_1} x_i}{n_1},$$

$$s_1 = \sqrt{\frac{\sum_{i=1}^{n_1} (x_i - \bar{x}_1)^2}{n_1 - 1}},$$

Where $\bar{x}_1$ and s_1 are expressed in pCi/g.

(4) Calculate the 95th percentile for the distribution, $\bar{x}^*$, using the following equation:

$$\bar{x}^* = \bar{x}_1 + 1.64\left(\frac{s_1}{\sqrt{n_1}}\right),$$

Where $\bar{x}^*$ is expressed in pCi/g.

(5) If the purpose for removing phosphogypsum from a stack is for distribution to commerce pursuant to § 61.206, the owner or operator of a phosphogypsum stack shall report the mean, standard deviation, 95th percentile and sample size. If the purpose for removing phosphogypsum from a stack is for distribution to commerce pursuant to § 61.204, the additional sampling procedures set forth in paragraphs (b) and (c) of this section shall apply.

(b) Based on the values for $\bar{x}_1$ and $\bar{x}^*$ calculated in paragraphs paragraphs (a)(3) and (4) of this section, determine which of the following conditions will be met:

(1) If $\bar{x}_1 < 10$ pCi/g and $\bar{x}^* \leq 10$ pCi/g; phosphogypsum may be removed from this area of the stack for distribution in commerce pursuant to § 61.204.

(2) If $\bar{x}_1$, < 10 pCi/g and $\bar{x}^* > 10$ pCi/g, the owner or operator may elect to follow the procedures for further sampling set forth in paragraph (c) of this section:

(3) If $\bar{x}_1 \geq 10$ pCi/g; phosphogypsum shall not be removed from this area of

the stack for distribution in commerce pursuant to §61.204.

(c) If the owner or operator elects to conduct further sampling to determine if phosphogypsum can be removed from this area of the stack, the following procedure shall apply. The objective of the following procedure is to demonstrate, with a 95% probability, that the phosphogypsum from this area of the stack has a radium-226 concentration no greater than 10 pCi/g. The procedure is iterative, the sample size may have to be increased more than one time; otherwise the phosphogypsum cannot be removed from this area of the stack for distribution to commerce pursuant to §61.204.

(1)(i) Solve the following equation for the total number of samples required:

$$n_2 = \left(\frac{1.64 s_1}{10 - \bar{x}_1}\right)^2.$$

(ii) The sample size n_2 shall be rounded upwards to the next whole number. The number of additional samples needed is $n_A = n_2 - n_1$.

(2) Obtain the necessary number of additional samples, n_A, which shall also be taken at regularly spaced intervals across the surface of the location on the stack from which phosphogypsum will be removed.

(3) Measure the radium-226 concentration of each of the n_A additional samples in accordance with the analytical procedures described in 40 CFR part 61, appendix B, Method 114.

(4) Recalculate the mean and standard deviation of the entire set of n_2 radium-226 concentrations by joining this set of n_A concentrations with the n_1 concentrations previously measured. Use the formulas in paragraph (a)(3) of this section, substituting the entire set of n_2 samples in place of the n_1 samples called for in paragraph (a)(3) of this section, thereby determining the mean, $\bar{x}_2$, and standard deviation, s_2, for the entire set of n_2 concentrations.

(5) Repeat the procedure described in paragraph (a)(4) of this section, substituting the recalculated mean, $\bar{x}_2$, for $\bar{x}_1$, the recalculated standard deviation, s_2, for s_1, and total sample size, n_2, for n_1.

(6) Repeat the procedure described in paragraph (b) of this section, substituting the recalculated mean, $\bar{x}_2$ for $\bar{x}_1$.

[64 FR 5579, Feb. 3, 1999]

§61.208 Certification requirements.

(a)(1) The owner or operator of a stack from which phosphogypsum will be removed and distributed in commerce pursuant to §61.204, §61.205, or §61.206 shall prepare a certification document for each quantity of phosphogypsum which is distributed in commerce which includes:

(i) The name and address of the owner or operator;

(ii) The name and address of the purchaser or recipient of the phosphogypsum;

(iii) The quantity of phosphogypsum, in kilograms or pounds sold or transferred;

(iv) The date of sale or transfer;

(v) A description of the intended end-use for the phosphogypsum;

(vi) The average radium-226 concentration, in pCi/g (pCi/lb), of the phosphogypsum, as determined pursuant to §61.207; and

(vii) The signature of the person who prepared the certification.

(2) The owner or operator shall retain the certification document for five years from the date of sale or transfer, and shall produce the document for inspection upon request by the Administrator, or his authorized representative. The owner or operator shall also provide a copy of the certification document to the purchaser or recipient.

(b)(1) Each distributor, retailer, or reseller who purchases or receives phosphogypsum for subsequent resale or transfer shall prepare a certification document for each quantity of phosphogypsum which is resold or transferred which includes:

(i) The name and address of the distributor, retailer, or reseller;

(ii) The name and address of the purchaser or recipient of the phosphogypsum;

(iii) The quantity (in pounds) of phosphogypsum resold or transferred;

(iv) The date of resale or transfer;

(v) A description of the intended end-use for the phosphogypsum;

(vi) A copy of each certification document which accompanied the phosphogypsum at the time it was purchased or received by the distributor, retailer, or reseller; and

(vii) The signature of the person who prepared the certification.

(2) The distributor, retailer, or reseller shall retain the certification document for five years from the date of resale or transfer, and shall produce the document for inspection upon request by the Administrator, or his authorized representative. For every resale or transfer of phosphogypsum to a person other than an agricultural end-user, the distributor, retailer, or reseller shall also provide a copy of the certification document to the purchaser or transferee.

[57 FR 23317, June 3, 1992, as amended at 65 FR 62158, Oct. 17, 2000]

§ 61.209 Required records.

(a) Each owner or operator of a phosphogypsum stack must maintain records for each stack documenting the procedure used to verify compliance with the flux standard in § 61.202, including all measurements, calculations, and analytical methods on which input parameters were based. The required documentation shall be sufficient to allow an independent auditor to verify the correctness of the determination made concerning compliance of the stack with flux standard.

(b) Each owner or operator of a phosphogypsum stack must maintain records documenting the procedure used to determine average radium-226 concentration pursuant to § 61.207, including all measurements, calculations, and analytical methods on which input parameters were based. The required documentation shall be sufficient to allow an independent auditor to verify the accuracy of the radium-226 concentration.

(c) Each facility which uses phosphogypsum pursuant to § 61.205 or § 61.206 shall prepare records which include the following information:

(1) The name and address of the person in charge of the activity involving use of phosphogypsum.

(2) A description of each use of phosphogypsum, including the handling and processing that the phosphogypsum underwent.

(3) The location of each site where each use of phosphogypsum occurred, including the suite and/or building number, street, city, county, state, and zip code.

(4) The mailing address of each facility using phosphogypsum, if different from paragraph (c)(3) of this section.

(5) The date of each use of phosphogypsum.

(6) The quantity of phosphogypsum used.

(7) The certified average concentration of radium-226 for the phosphogypsum which was used.

(8) A description of all measures taken to prevent the uncontrolled release of phosphogypsum into the environment.

(9) A description of the disposition of any unused phosphogypsum.

(d) These records shall be retained by the facility for at least five years from the date of use of the phosphogypsum and shall be produced for inspection upon request by the Administrator, or his authorized representative.

§ 61.210 Exemption from the reporting and testing requirements of 40 CFR 61.10.

All facilities designated under this subpart are exempt from the reporting requirements of 40 CFR 61.10.

Subpart S [Reserved]

Subpart T—National Emission Standards for Radon Emissions From the Disposal of Uranium Mill Tailings

SOURCE: 54 FR 51702, Dec. 15, 1989, unless otherwise noted.

§ 61.220 Designation of facilities.

(a) The provisions of this subpart apply to owners and operators of all sites that are used for the disposal of tailings, and that managed residual radioactive material during and following the processing of uranium ores, commonly referred to as uranium mills and their associated tailings, that are listed in, or designated by the Secretary of Energy under title I of the

Uranium Mill Tailings Radiation Control Act of 1978, except § 61.226 of this subpart which applies to owners and operators of all sites that are regulated under title II of the Uranium Mill Tailings Radiation Control Act of 1978.

(b) [Reserved]

[59 FR 36301, July 15, 1994]

§ 61.221 Definitions.

As used in this subpart, all terms not defined here have the meanings given them in the Clean Air Act or subpart A of part 61. The following terms shall have the following specific meanings:

(a) *Long term stabilization* means the addition of material on a uranium mill tailings pile for the purpose of ensuring compliance with the requirements of 40 CFR 192.02(a). These actions shall be considered complete when the Nuclear Regulatory Commission determines that the requirements of 40 CFR 192.02(a) have been met.

(b) *Operational* means a uranium mill tailings pile that is licensed to accept additional tailings, and those tailings can be added without violating subpart W or any other Federal, state or local rule or law. A pile cannot be considered operational if it is filled to capacity or the mill it accepts tailings from has been dismantled or otherwise decommissioned.

(c) *Residual radioactive materials* shall have the same meaning as in section 101(7) of the Uranium Mill Tailings Radiation Control Act of 1978, 42 U.S.C. 7911(7).

(d) *Tailings* shall have the same meaning as in section 101(8) of the Uranium Mill Tailings Radiation Control Act of 1978, 42 U.S.C. 7911(8).

(e) *In significant part* means in a manner that is not reasonably expected to materially (i.e., more than de minimis) interfere with compliance with the 20 pCi/m^2-s flux standard as expeditiously as practicable considering technological feasibility (including factors beyond the control of the licensee).

[54 FR 51702, Dec. 15, 1989, as amended at 59 FR 36301, July 15, 1994]

§ 61.222 Standard.

(a) Radon-222 emissions to the ambient air from uranium mill tailings pile that are no longer operational shall not exceed 20 pCi/(m^2-sec) (1.9 pCi/(ft^2-sec)) of radon-222.

(b) Once a uranium mill tailings pile or impoundment ceases to be operational it must be disposed of and brought into compliance with this standard within two years of the effective date of the standard. If it is not physically possible for an owner or operator to complete disposal within that time, EPA shall, after consultation with the owner or operator, establish a compliance agreement which will assure that disposal will be completed as quickly as possible.

[54 FR 51702, Dec. 15, 1989, as amended at 59 FR 36301, July 15, 1994; 65 FR 62158, Oct. 17, 2000]

§ 61.223 Compliance procedures.

(a) Sixty days following the completion of covering the pile to limit radon emissions but prior to the long term stabilization of the pile, the owners or operators of uranium mill tailings shall conduct testing for all piles within the facility in accordance with the procedures described in 40 CFR part 61, appendix B, Method 115, or other procedures for which EPA has granted prior approval.

(b) Ninety days after the testing is required, each facility shall provide EPA with a report detailing the actions taken and the results of the radon-222 flux testing. EPA shall be notified at least 30 days prior to an emission test so that EPA may, at its option, observe the test. If meteorological conditions are such that a test cannot be properly conducted, then the owner or operator shall notify EPA and test as soon as conditions permit. Each report shall also include the following information:

(1) The name and location of the facility.

(2) A list of the piles at the facility.

(3) A description of the control measures taken to decrease the radon flux from the source and any actions taken to insure the long term effectiveness of the control measures.

(4) The results of the testing conducted, including the results of each measurement.

(5) Each report shall be signed and dated by a public official in charge of the facility and contain the following

declaration immediately above the signature line:

I certify under penalty of law that I have personally examined and am familiar with the information submitted herein and based on my inquiry of those individuals immediately responsible for obtaining the information. I believe that the submitted information is true, accurate and complete. I am aware that there are significant penalties for submitting false information including the possibility of fine and imprisonment. See 18 U.S.C. 1001.

(c) If year long measurements are made in accordance with Method 115 of appendix B of part 61, this report shall include the results of the first measurement period and provide a schedule for the measurement frequency to be used. An additional report shall be submitted ninety days after completion of the final measurements.

(d) If long term stabilization has begun before the effective date of the rule then testing may be conducted at any time, up to 60 days after the long term stabilization is completed.

(e) If the testing demonstrates that the pile meets the requirement of § 61.222(a) and long term stabilization has been completed then the pile is considered disposed for purposes of this rule.

[54 FR 51702, Dec. 15, 1989, as amended at 59 FR 36302, July 15, 1994]

§ 61.224 Recordkeeping requirements.

The owner or operator must maintain records documenting the source of input parameters including the results of all measurements upon which they are based, the calculations and/or analytical methods used to derive values for input parameters, and the procedure used to determine compliance. This documentation should be sufficient to allow an independent auditor to verify the accuracy of the determination made concerning the facility's compliance with the standard. The Administrator shall be kept apprised of the location of these records and the records must be kept for at least five years and upon request be made available for inspection by the Administrator, or his authorized representative.

§ 61.225 Exemption from the reporting and testing requirements of 40 CFR 61.10.

All facilities designated under this subpart are exempt from the reporting requirements of 40 CFR 61.10.

§ 61.226 Reconsideration of rescission and reinstatement of this subpart.

(a) *Reinstatement of this subpart upon completion of reconsideration of rescission.* (1) The Administrator shall reinstate 40 CFR part 61, subpart T as applied to owners and operators of non-operational uranium mill tailings disposal sites that are licensed by the NRC or an affected Agreement State if the Administrator determines by rulemaking, based on the record, that NRC or an affected Agreement State has:

(i) Failed on a programmatic basis to implement and enforce, in significant part, the regulations governing the disposal of uranium mill tailings promulgated by EPA and NRC or the tailings closure plan (radon) (i.e., contained in the license) requirements establishing milestones for the purpose of emplacing a permanent radon barrier that will achieve compliance with the 20 pCi/m^2-s flux standard; and

(ii) Those failures may reasonably be anticipated to significantly interfere (i.e., more than de minimis) with the timely emplacement of a permanent radon barrier constructed to achieve compliance with the 20 pCi/m^2-s flux standard at the uranium mill tailings disposal site.

(2) The Administrator shall reinstate 40 CFR part 61, subpart T on a site-specific basis as applied to owners and operators of non-operational uranium mill tailings disposal sites that are licensed by the NRC or an affected Agreement State if the Administrator determines by rulemaking, based on the record:

(i) That NRC or an affected Agreement State has failed in significant part on a site-specific basis to achieve compliance by the operator of the site or sites with applicable license requirements, regulations, or standards implemented by NRC and the affected Agreement States; and

(ii) Those failures may reasonably be anticipated to significantly interfere (i.e., more than de minimis) with the

timely emplacement of a permanent radon barrier constructed to achieve compliance with the 20 pCi/m^2-s flux standard at the uranium mill tailings disposal site.

(3) Upon completion of the reconsideration of rescission pursuant to §61.226(c) the Administrator may issue a finding that reinstatement of this subpart is not appropriate if the Administrator finds:

(i) NRC and the affected Agreement States are on a programmatic basis implementing and enforcing, in significant part, the regulations governing the disposal of uranium mill tailings promulgated by EPA and NRC or the tailings closure plan (radon) (i.e., contained in the license) requirements establishing milestones for the purpose of emplacing a permanent radon barrier that will achieve compliance with the 20 pCi/m^2-s flux standard; or

(ii) NRC or an affected Agreement State are on a site-specific basis, in significant part, achieving compliance by the operator of the site or sites with applicable license requirements, regulations, or standards implemented by NRC and the affected Agreement States.

(b) *Procedures to petition for reconsideration of rescission of this subpart.* (1) A person may petition the Administrator to reconsider the rescission and seek reinstatement of this subpart under §61.226(a).

(2) EPA shall summarily dismiss a petition to reconsider rescission and seek reinstatement of this subpart under §61.226(a)(1) (programmatic basis), without prejudice, unless the petitioner demonstrates that written notice of the alleged failure(s) was provided to NRC at least 60 days before filing the petition with EPA. This notification shall include a statement of the grounds for such a petition and this notice requirement may be satisfied by, but is not limited to, submissions or pleadings submitted to NRC during a proceeding conducted by NRC.

(3) EPA shall summarily dismiss a petition to reconsider rescission and seek reinstatement of this subpart under §61.226(a)(2) (site-specific basis), without prejudice, unless the petitioner demonstrates that a written request was made to NRC or an affected Agreement State for enforcement or other relief at least 60 days before filing its petition with EPA, and unless the petitioner alleges that NRC or the affected Agreement State failed to respond to such request by taking action, as necessary, to assure timely implementation and enforcement of the 20 pCi/m^2-s flux standard.

(4) Upon receipt of a petition under §61.226(b)(1) that is not dismissed under §61.226(b)(2) or (b)(3), EPA will propose to grant or deny an authorized petition to reconsider, take comments on the Agency's proposed action, and take final action granting or denying such petition to reconsider within 300 days of receipt.

(c) *Reconsideration of rescission of this subpart initiated by the Administrator.* (1) The Administrator may initiate reconsideration of the rescission and reinstatement of this subpart as applied to owners and operators of non-operational uranium mill tailings disposal sites if EPA has reason to believe that NRC or an affected Agreement State has failed to implement and enforce, in significant part, the regulations governing the disposal of uranium mill tailings promulgated by EPA and NRC or the tailings closure plan (radon) requirements establishing milestones for the purpose of emplacing a permanent radon barrier that will achieve compliance with the 20 pCi/m^2-s flux standard.

(2) Before the Administrator initiates reconsideration of the rescission and reinstatement of this subpart under §61.226(c)(1), EPA shall consult with NRC to address EPA's concerns and if the consultation does not resolve the concerns, EPA shall provide NRC with 60 days notice of the Agency's intent to initiate rulemaking to reinstate this subpart.

[59 FR 36302, July 15, 1994]

Subpart U [Reserved]

Subpart V—National Emission Standard for Equipment Leaks (Fugitive Emission Sources)

SOURCE: 49 FR 23513, June 6, 1984, unless otherwise noted.

§ 61.240 Applicability and designation of sources.

(a) The provisions of this subpart apply to each of the following sources that are intended to operate in volatile hazardous air pollutant (VHAP) service: pumps, compressors, pressure relief devices, sampling connection systems, open-ended valves or lines, valves, connectors, surge control vessels, bottoms receivers, and control devices or systems required by this subpart.

(b) The provisions of this subpart apply to the sources listed in paragraph (a) after the date of promulgation of a specific subpart in part 61.

(c) While the provisions of this subpart are effective, a source to which this subpart applies that is also subject to the provisions of 40 CFR part 60 only will be required to comply with the provisions of this subpart.

(d) *Alternative means of compliance.* (1) *Option to comply with part 65.* Owners or operators may choose to comply with 40 CFR part 65 to satisfy the requirements of §§ 61.242–1 through 61.247 for equipment that is subject to this subpart and that is part of the same process unit. When choosing to comply with 40 CFR part 65, the requirements of §§ 61.245(d) and 61.246(i) and (j) still apply. Other provisions applying to owners or operators who choose to comply with 40 CFR part 65 are provided in 40 CFR 65.1.

(2) *Part 65, subpart C or F.* For owners or operators choosing to comply with 40 CFR part 65, each surge control vessel and bottoms receiver subject to this subpart that meets the conditions specified in table 1 or table 2 of this subpart shall meet the requirements for storage vessels in 40 CFR part 65, subpart C; all other equipment subject to this subpart shall meet the requirements in 40 CFR part 65, subpart F.

(3) *Part 61, subpart A.* Owners or operators who choose to comply with 40 CFR part 65, subpart C or F, must also comply with §§ 61.01, 61.02, 61.05 through 61.08, 61.10(b) through (d), 61.11, and 61.15 for that equipment. All sections and paragraphs of subpart A of this part that are not mentioned in this paragraph (d)(3) do not apply to owners or operators of equipment subject to this subpart complying with 40 CFR part 65, subpart C or F, except that provisions required to be met prior to implementing 40 CFR part 65 still apply. Owners and operators who choose to comply with 40 CFR part 65, subpart C or F, must comply with 40 CFR part 65, subpart A.

(4) *Rules referencing this subpart.* Owners or operators referenced to this subpart from subpart F or J of this part may choose to comply with 40 CFR part 65 for all equipment listed in paragraph (a) of this section.

[49 FR 23513, June 6, 1984, as amended at 65 FR 78280, Dec. 14, 2000]

§ 61.241 Definitions.

As used in this subpart, all terms not defined herein shall have the meaning given them in the Act, in subpart A of part 61, or in specific subparts of part 61; and the following terms shall have specific meaning given them:

Bottoms receiver means a tank that collects distillation bottoms before the stream is sent for storage or for further downstream processing.

Closed-vent system means a system that is not open to atmosphere and that is composed of hard-piping, ductwork, connections, and, if necessary, flow-inducing devices that transport gas or vapor from a piece or pieces of equipment to a control device or back to a process.

Connector means flanged, screwed, welded, or other joined fittings used to connect two pipe lines or a pipe line and a piece of equipment. For the purpose of reporting and recordkeeping, connector means flanged fittings that are not covered by insulation or other materials that prevent location of the fittings.

Control device means an enclosed combustion device, vapor recovery system, or flare.

Double block and bleed system means two block valves connected in series with a bleed valve or line that can vent the line between the two block valves.

Duct work means a conveyance system such as those commonly used for heating and ventilation systems. It is often made of sheet metal and often has sections connected by screws or crimping. Hard-piping is not ductwork.

Equipment means each pump, compressor, pressure relief device, sampling connection system, open-ended

valve or line, valve, connector, surge control vessel, bottoms receiver in VHAP service, and any control devices or systems required by this subpart.

First attempt at repair means to take rapid action for the purpose of stopping or reducing leakage of organic material to atmosphere using best practices.

In gas/vapor service means that a piece of equipment contains process fluid that is in the gaseous state at operating conditions.

Fuel gas means gases that are combusted to derive useful work or heat.

Fuel gas system means the offsite and onsite piping and flow and pressure control system that gathers gaseous stream(s) generated by onsite operations, may blend them with other sources of gas, and transports the gaseous stream for use as fuel gas in combustion devices or in-process combustion equipment, such as furnaces and gas turbines, either singly or in combination.

Hard-piping means pipe or tubing that is manufactured and properly installed using good engineering judgement and standards such as ASME B31.3, Process Piping (available from the American Society of Mechanical Engineers, PO Box 2900, Fairfield, NJ 07007–2900).

In liquid service means that a piece of equipment is not in gas/vapor service.

In-situ sampling systems means nonextractive samplers or in-line samplers.

In vacuum service means that equipment is operating at an internal pressure which is at least 5 kilopascals (kPa) (0.7 psia) below ambient pressure.

In VHAP service means that a piece of equipment either contains or contacts a fluid (liquid or gas) that is at least 10 percent by weight a volatile hazardous air pollutant (VHAP) as determined according to the provisions of §61.245(d). The provisions of §61.245(d) also specify how to determine that a piece of equipment is not in VHAP service.

In VOC service means, for the purposes of this subpart, that (a) the piece of equipment contains or contacts a process fluid that is at least 10 percent VOC by weight (see 40 CFR 60.2 for the definition of volatile organic compound or VOC and 40 CFR 60.485(d) to determine whether a piece of equipment is not in VOC service) and (b) the piece of equipment is not in heavy liquid service as defined in 40 CFR 60.481.

Maximum true vapor pressure means the equilibrium partial pressure exerted by the total VHAP in the stored or transferred liquid at the temperature equal to the highest calendar-month average of the liquid storage or transfer temperature for liquids stored or transferred above or below the ambient temperature or at the local maximum monthly average temperature as reported by the National Weather Service for liquids stored or transferred at the ambient temperature, as determined:

(1) In accordance with methods described in American Petroleum Institute Publication 2517, Evaporative Loss From External Floating-Roof Tanks (incorporated by reference as specified in §61.18); or

(2) As obtained from standard reference texts; or

(3) As determined by the American Society for Testing and Materials Method D2879–83, Standard Test Method for Vapor Pressure-Temperature Relationship and Initial Decomposition Temperature of Liquids by Isoteniscope (incorporated by reference as specified in §61.18); or

(4) Any other method approved by the Administrator.

Open-ended valve or line means any valve, except pressure relief valves, having one side of the valve seat in contact with process fluid and one side open to atmosphere, either directly or through open piping.

Pressure release means the emission of materials resulting from the system pressure being greater than the set pressure of the pressure relief device.

Process unit means equipment assembled to produce a VHAP or its derivatives as intermediates or final products, or equipment assembled to use a VHAP in the production of a product. A process unit can operate independently if supplied with sufficient feed or raw materials and sufficient product storage facilities.

Process unit shutdown means a work practice or operational procedure that stops production from a process unit or part of a process unit. An unscheduled work practice or operational procedure

that stops production from a process unit or part of a process unit for less than 24 hours is not a process unit shutdown. The use of spare equipment and technically feasible bypassing of equipment without stopping production are not process unit shutdowns.

Repaired means that equipment is adjusted, or otherwise altered, to eliminate a leak.

Sampling connection system means an assembly of equipment within a process unit used during periods of representative operation to take samples of the process fluid. Equipment used to take non-routine grab samples is not considered a sampling connection system.

Semiannual means a 6-month period; the first semiannual period concludes on the last day of the last month during the 180 days following initial startup for new sources; and the first semiannual period concludes on the last day of the last full month during the 180 days after the effective date of a specific subpart that references this subpart for existing sources.

Sensor means a device that measures a physical quantity or the change in a physical quantity, such as temperature, pressure, flow rate, pH, or liquid level.

Stuffing box pressure means the fluid (liquid or gas) pressure inside the casing or housing of a piece of equipment, on the process side of the inboard seal.

Surge control vessel means feed drums, recycle drums, and intermediate vessels. Surge control vessels are used within a process unit when in-process storage, mixing, or management of flow rates of volumes is needed on a recurring or ongoing basis to assist in production of a product.

Volatile hazardous air pollutant or *VHAP* means a substance regulated under this part for which a standard for equipment leaks of the substance has been proposed and promulgated. Benzene is a VHAP. Vinyl chloride is a VHAP.

[49 FR 23513, June 6, 1984; 49 FR 38946, Oct. 2, 1984, as amended at 51 FR 34915, Sept. 30, 1986; 54 FR 38076, Sept. 14, 1989; 65 FR 62158, Oct. 17, 2000; 65 FR 78280, Dec. 14, 2000]

§ 61.242–1 Standards: General.

(a) Each owner or operator subject to the provisions of this subpart shall demonstrate compliance with the requirements of §§ 61.242–1 to 61.242–11 for each new and existing source as required in 40 CFR 61.05, except as provided in §§ 61.243 and 61.244.

(b) Compliance with this subpart will be detemined by review of records, review of performance test results, and inspection using the methods and procedures specified in § 61.245.

(c)(1) An owner or operator may request a determination of alternative means of emission limitation to the requirements of §§ 61.242–2, 61.242–3, 61.242–5, 61.242–6, 61.242–7, 61.242–8, 61.242–9 and 61.242–11 as provided in § 61.244.

(2) If the Administrator makes a determination that a means of emission limitation is at least a permissible alternative to the requirements of § 61.242–2, 61.242–3, 61.242–5, 61.242–6, 61.242–7, 61.242–8, 61.242–9 or 61.242–11, an owner or operator shall comply with the requirements of that determination.

(d) Each piece of equipment to which this subpart applies shall be marked in such a manner that it can be distinquished readily from other pieces of equipment.

(e) Equipment that is in vacuum service is excluded from the requirements of § 61.242–2, to § 61.242–11 if it is identified as required in § 61.246(e)(5).

[49 FR 23513, June 6, 1984; 49 FR 38946, Oct. 2, 1984]

§ 61.242–2 Standards: Pumps.

(a)(1) Each pump shall be monitored monthly to detect leaks by the methods specified in § 61.245(b), except as provided in § 61.242–1(c) and paragraphs (d), (e), (f) and (g) of this section.

(2) Each pump shall be checked by visual inspection each calendar week for indications of liquids dripping from the pump seal.

(b)(1) If an instrument reading of 10,000 ppm or greater is measured, a leak is detected.

(2) If there are indications of liquids dripping from the pump seal, a leak is detected.

(c)(1) When a leak is detected, it shall be repaired as soon as practicable, but not later than 15 calendar days after it is detected, except as provided in §61.242–10.

(2) A first attempt at repair shall be made no later than 5 calendar days after each leak is detected.

(d) Each pump equipped with a dual mechanical seal system that includes a barrier fluid system is exempt from the requirements of paragraphs (a) and (b) of this section, provided the following requirements are met:

(1) Each dual mechanical seal system is:

(i) Operated with the barrier fluid at a pressure that is at all times greater than the pump stuffing box pressure; or

(ii) Equipped with a barrier fluid degassing reservoir that is routed to a process or fuel gas system or connected by a closed-vent system to a control device that complies with the requirements of §61.242–11; or

(iii) Equipped with a system that purges the barrier fluid into a process stream with zero VHAP emissions to atmosphere.

(2) The barrier fluid is not in VHAP service and, if the pump is covered by standards under 40 CFR part 60, is not in VOC service.

(3) Each barrier fluid system is equipped with a sensor that will detect failure of the seal system, the barrier fluid system, or both.

(4) Each pump is checked by visual inspection each calendar week for indications of liquids dripping from the pump seal.

(i) If there are indications of liquid dripping from the pump seal at the time of the weekly inspection, the pump shall be monitored as specified in §61.245 to determine the presence of VOC and VHAP in the barrier fluid.

(ii) If the monitor reading (taking into account any background readings) indicates the presence of VHAP, a leak is detected. For the purpose of this paragraph, the monitor may be calibrated with VHAP, or may employ a gas chromatography column to limit the response of the monitor to VHAP, at the option of the owner or operator.

(iii) If an instrument reading of 10,000 ppm or greater (total VOC) is measured, a leak is detected.

(5) Each sensor as described in paragraph (d)(3) of this section is checked daily or is equipped with an audible alarm.

(6)(i) The owner or operator determines, based on design considerations and operating experience, criteria applicable to the presence and frequency of drips and to the sensor that indicates failure of the seal system, the barrier fluid system, or both.

(ii) If indications of liquids dripping from the pump seal exceed the criteria established in paragraph (d)(6)(i) of this section, or if, based on the criteria established in paragraph (d)(6)(i) of this section, the sensor indicates failure of the seal system, the barrier fluid system, or both, a leak is detected.

(iii) When a leak is detected, it shall be repaired as soon as practicable, but no later than 15 calendar days after it is detected, except as provided in §61.242–10.

(iv) A first attempt at repair shall be made no later than five calendar days after each leak is detected.

(e) Any pump that is designated, as described in §61.246(e)(2), for no detectable emissions, as indicated by an instrument reading of less than 500 ppm above background, is exempt from the requirements of paragraphs (a), (c), and (d) if the pump:

(1) Has no externally actuated shaft penetrating the pump housing,

(2) Is demonstrated to be operating with no detectable emissions, as indicated by an instrument reading of less than 500 ppm above background, as measured by the method specified in §61.245(c), and

(3) Is tested for compliance with paragraph (e)(2) initially upon designation, annually, and at other times requested by the Administrator.

(f) If any pump is equipped with a closed-vent system capable of capturing and transporting any leakage from the seal or seals to a process or fuel gas system or to a control device that complies with the requirements of §61.242–11, it is exempt from the requirements of paragraphs (a) through (e) of this section.

(g) Any pump that is designated, as described in §61.246(f)(1), as an unsafe-to-monitor pump is exempt from the

monitoring and inspection requirements of paragraphs (a) and (d)(4) through (6) of this section if:

(1) The owner or operator of the pump demonstrates that the pump is unsafe-to-monitor because monitoring personnel would be exposed to an immediate danger as a consequence of complying with paragraph (a) of this section; and

(2) The owner or operator of the pump has a written plan that requires monitoring of the pump as frequently as practicable during safe-to-monitor times but not more frequently than the periodic monitoring schedule otherwise applicable, and repair of the equipment according to the procedures in paragraph (c) of this section if a leak is detected.

(h) Any pump that is located within the boundary of an unmanned plant site is exempt from the weekly visual inspection requirement of paragraphs (a)(2) and (d)(4) of this section, and the daily requirements of paragraph (d)(5) of this section, provided that each pump is visually inspected as often as practicable and at least monthly.

[49 FR 23513, June 6, 1984, as amended at 49 FR 38946, Oct. 2, 1984; 55 FR 28349, July 10, 1990; 65 FR 78281, Dec. 14, 2000]

§ 61.242–3 Standards: Compressors.

(a) Each compressor shall be equipped with a seal system that includes a barrier fluid system and that prevents leakage of process fluid to atmosphere, except as provided in § 61.242–1(c) and paragraphs (h) and (i) of this section.

(b) Each compressor seal system as required in paragraph (a) shall be:

(1) Operated with the barrier fluid at a pressure that is greater than the compressor stuffing box pressure; or

(2) Equipped with a barrier fluid system degassing reservoir that is routed to a process or fuel gas system or connected by a closed-vent system to a control device that complies with the requirements of § 61.242–11; or

(3) Equipped with a system that purges the barrier fluid into a process stream with zero VHAP emissions to atmosphere.

(c) The barrier fluid shall not be in VHAP service and, if the compressor is covered by standards under 40 CFR part 60, shall not be in VOC service.

(d) Each barrier fluid system as described in paragraphs (a)–(c) of this section shall be equipped with a sensor that will detect failure of the seal system, barrier fluid system, or both.

(e)(1) Each sensor as required in paragraph (d) of this section shall be checked daily or shall be equipped with an audible alarm unless the compressor is located within the boundary of an unmanned plant site.

(2) The owner or operator shall determine, based on design considerations and operating experience, a criterion that indicates failure of the seal system, the barrier fluid system, or both.

(f) If the sensor indicates failure of the seal system, the barrier fluid system, or both based on the criterion determined under paragraph (e)(2) of this section, a leak is detected.

(g)(1) When a leak is detected, it shall be repaired as soon as practicable, but not later than 15 calendar days after it is detected, except as provided in § 61.242–10.

(2) A first attempt at repair shall be made no later than 5 calendar days after eack leak is detected.

(h) A compressor is exempt from the requirements of paragraphs (a) and (b) of this section if it is equipped with a closed-vent system to capture and transport leakage from the compressor drive shaft back to a process or fuel gas system or to a control device that complies with the requirements of § 61.242–11, except as provided in paragraph (i) of this section.

(i) Any Compressor that is designated, as described in § 61.246(e)(2), for no detectable emission as indicated by an instrument reading of less than 500 ppm above background is exempt from the requirements of paragraphs (a)–(h) if the compressor:

(1) Is demonstrated to be operating with no detectable emissions, as indicated by an instrument reading of less than 500 ppm above background, as measured by the method specified in § 61.245(c); and

(2) Is tested for compliance with paragraph (i)(1) initially upon designation, annually, and at other times requested by the Administrator.

[49 FR 23513, June 6, 1984; 49 FR 38946, Oct. 2, 1984, as amended at 65 FR 78281, Dec. 14, 2000]

§61.242–4 Standards: Pressure relief devices in gas/vapor service.

(a) Except during pressure releases, each pressure relief device in gas/vapor service shall be operated with no detectable emissions, as indicated by an instrument reading of less than 500 ppm above background, as measured by the method specified in §61.245(c).

(b)(1) After each pressure release, the pressure relief device shall be returned to a condition of no detectable emissions, as indicated by an instrument reading of less than 500 ppm above background, as soon as practicable, but no later than 5 calendar days after each pressure release, except as provided in §61.242–10.

(2) No later than 5 calendar days after the pressure release, the pressure relief device shall be monitored to confirm the condition of no detectable emissions, as indicated by an instrument reading of less than 500 ppm above background, as measured by the method specified in §61.245(c).

(c) Any pressure relief device that is routed to a process or fuel gas system or equipped with a closed-vent system capable of capturing and transporting leakage from the pressure relief device to a control device as described in §61.242–11 is exempt from the requirements of paragraphs (a) and (b) of this section.

(d)(1) Any pressure relief device that is equipped with a rupture disk upstream of the pressure relief device is exempt from the requirements of paragraphs (a) and (b) of this section, provided the owner or operator complies with the requirements in paragraph (d)(2) of this section.

(2) After each pressure release, a new rupture disk shall be installed upstream of the pressure relief device as soon as practicable, but no later than 5 calendar days after each pressure release, except as provided in §61.242–10.

[49 FR 23513, June 6, 1984; 49 FR 38946, Oct. 2, 1984, as amended at 65 FR 78281, Dec. 14, 2000]

§61.242–5 Standards: Sampling connecting systems.

(a) Each sampling connection system shall be equipped with a closed-purge, closed-loop, or closed vent system, except as provided in §61.242–1(c). Gases displaced during filling of the sample container are not required to be collected or captured.

(b) Each closed-purge, closed-loop, or closed vent system as required in paragraph (a) of this section shall comply with the requirements specified in paragraphs (b)(1) through (4) of this section:

(1) Return the purged process fluid directly to the process line; or

(2) Collect and recycle the purged process fluid; or

(3) Be designed and operated to capture and transport all the purged process fluid to a control device that complies with the requirements of §61.242–11; or

(4) Collect, store, and transport the purged process fluid to any of the following systems or facilities:

(i) A waste management unit as defined in 40 CFR 63.111 if the waste management unit is subject to and operated in compliance with the provisions of 40 CFR part 63, subpart G, applicable to Group 1 wastewater streams; or

(ii) A treatment, storage, or disposal facility subject to regulation under 40 CFR part 262, 264, 265, or 266; or

(iii) A facility permitted, licensed, or registered by a State to manage municipal or industrial solid waste, if the process fluids are not hazardous waste as defined in 40 CFR part 261.

(c) In-situ sampling systems and sampling systems without purges are exempt from the requirements of paragraphs (a) and (b) of this section.

[65 FR 78281, Dec. 14, 2000]

§61.242–6 Standards: Open-ended valves or lines.

(a)(1) Each open-ended valve or line shall be equipped with a cap, blind flange, plug, or a second valve, except as provided in §61.242–1(c).

(2) The cap, blind flange, plug, or second valve shall seal the open end at all times except during operations requiring process fluid flow through the open-ended valve or line.

(b) Each open-ended valve or line equipped with a second valve shall be operated in a manner such that the valve on the process fluid end is closed before the second valve is closed.

(c) When a double block and bleed system is being used, the bleed valve or line may remain open during operations that require venting the line between the block valves but shall comply with paragraph (a) at all other times.

(d) Open-ended valves or lines in an emergency shutdown system which are designed to open automatically in the event of a process upset are exempt from the requirements of paragraphs (a), (b) and (c) of this section.

(e) Open-ended valves or lines containing materials which would autocatalytically polymerize or would present an explosion, serious overpressure, or other safety hazard if capped or equipped with a double block and bleed system as specified in paragraphs (a) through (c) of this section are exempt from the requirements of paragraphs (a) through (c) of this section.

[49 FR 23513, June 6, 1984, as amended at 65 FR 78282, Dec. 14, 2000]

§ 61.242–7 Standards: Valves.

(a) Each valve shall be monitored monthly to detect leaks by the method specified in § 61.245(b) and shall comply with paragraphs (b)–(e), except as provided in paragraphs (f), (g), and (h) of this section, § 61.243–1 or § 61.243–2, and § 61.242–1(c).

(b) If an instrument reading of 10,000 ppm or greater is measured, a leak is detected.

(c)(1) Any valve for which a leak is not detected for 2 successive months may be monitored the first month of every quarter, beginning with the next quarter, until a leak is detected.

(2) If a leak is detected, the valve shall be monitored monthly until a leak is not detected for 2 successive months.

(d)(1) When a leak is detected, it shall be repaired as soon as practicable, but no later than 15 calendar days after the leak is detected, except as provided in § 61.242–10.

(2) A first attempt at repair shall be made no later than 5 calendar days after each leak is detected.

(e) First attempts at repair include, but are not limited to, the following best practices where practicable:

(1) Tightening of bonnet bolts;

(2) Replacement of bonnet bolts;

(3) Tightening of packing gland nuts; and

(4) Injection of lubricant into lubricated packing.

(f) Any valve that is designated, as described in § 61.246(e)(2), for no detectable emissions, as indicated by an instrument reading of less than 500 ppm above background, is exempt from the requirements of paragraph (a) if the valve:

(1) Has no external actuating mechanism in contact with the process fluid;

(2) Is operated with emissions less than 500 ppm above background, as measured by the method specified in § 61.245(c); and

(3) Is tested for compliance with paragraph (f)(2) initially upon designation, annually, and at other times requested by the Administrator.

(g) Any valve that is designated, as described in § 61.246(f)(1), as an unsafe-to-monitor valve is exempt from the requirements of paragraph (a) if:

(1) The owner or operator of the valve demonstrates that the valve is unsafe to monitor because monitoring personnel would be exposed to an immediate danger as a consequence of complying with paragraph (a); and

(2) The owner or operator of the valve has a written plan that requires monitoring of the valve as frequent as practicable during safe-to-monitor times.

(h) Any valve that is designated, as described in § 61.246(f)(2), as a difficult-to-monitor valve is exempt from the requirements of paragraph (a) if:

(1) The owner or operator of the valve demonstrates that the valve cannot be monitored without elevating the monitoring personnel more than 2 meters above a support surface;

(2) The process unit within which the valve is located is an existing process unit; and

(3) The owner or operator of the valve follows a written plan that requires monitoring of the valve at least once per calendar year.

§61.242–8 Standards: Pressure relief services in liquid service and connectors.

(a) If evidence of a potential leak is found by visual, audible, olfactory, or any other detection method at pressure relief devices in liquid service and connectors, the owner or operator shall follow either one of the following procedures, except as provided in §61.242–1(c):

(1) The owner or operator shall monitor the equipment within 5 days by the method specified in §61.245(b) and shall comply with the requirements of paragraphs (b) through (d) of this section.

(2) The owner or operator shall eliminate the visual, audible, olfactory, or other indication of a potential leak.

(b) If an instrument reading of 10,000 ppm or greater is measured, a leak is detected.

(c)(1) When a leak is detected, it shall be repaired as soon as practicable, but not later than 15 calendar days after it is detected, except as provided in §61.242–10.

(2) The first attempt at repair shall be made no later than 5 calendar days after each leak is detected.

(d) First attempts at repair include, but are not limited to, the best practices described under §61.242–7(e).

[49 FR 23513, June 6, 1984; 49 FR 38946, Oct. 2, 1984, as amended at 65 FR 78282, Dec. 14, 2000]

§61.242–9 Standards: Surge control vessels and bottoms receivers.

Each surge control vessel or bottoms receiver that is not routed back to the process and that meets the conditions specified in table 1 or table 2 of this subpart shall be equipped with a closed-vent system capable of capturing and transporting any leakage from the vessel back to the process or to a control device as described in §61.242–11, except as provided in §61.242–1(c); or comply with the requirements of 40 CFR 63.119(b) or (c).

[65 FR 78282, Dec. 14, 2000]

§61.242–10 Standards: Delay of repair.

(a) Delay of repair of equipment for which leaks have been detected will be allowed if repair within 15 days is technically infeasible without a process unit shutdown. Repair of this equipment shall occur before the end of the next process unit shutdown.

(b) Delay of repair of equipment for which leaks have been detected will be allowed for equipment that is isolated from the process and that does not remain in VHAP service.

(c) Delay of repair for valves will be allowed if:

(1) The owner or operator demonstrates that emissions of purged material resulting from immediate repair are greater than the fugitive emissions likely to result from delay of repair, and

(2) When repair procedures are effected, the purged material is collected and destroyed or recovered in a control device complying with §61.242–11.

(d) Delay of repair for pumps will be allowed if:

(1) Repair requires the use of a dual mechanical seal system that includes a barrier fluid system, and

(2) Repair is completed as soon as practicable, but not later than 6 months after the leak was detected.

(e) Delay of repair beyond a process unit shutdown will be allowed for a valve if valve assembly replacement is necessary during the process unit shutdown, valve assembly supplies have been depleted, and valve assembly supplies had been sufficiently stocked before the supplies were depleted. Delay of repair beyond the next process unit shutdown will not be allowed unless the next process unit shutdown occurs sooner than 6 months after the first process unit shutdown.

[49 FR 23513, June 6, 1984, as amended at 65 FR 78282, Dec. 14, 2000]

§61.242–11 Standards: Closed-vent systems and control devices.

(a) Owners or operators of closed-vent systems and control devices used to comply with provisions of this subpart shall comply with the provisions of this section, except as provided in §61.242–1(c).

(b) Vapor recovery systems (for example, condensers and absorbers) shall be designed and operated to recover the organic vapors vented to them with an efficiency of 95 percent or greater, or to an exit concentration of 20 parts per

million by volume, whichever is less stringent.

(c) Enclosed combustion devices shall be designed and operated to reduce the VHAP emissions vented to them with an efficiency of 95 percent or greater, or to an exit concentration of 20 parts per million by volume, on a dry basis, corrected to 3 percent oxygen, whichever is less stringent, or to provide a minimum residence time of 0.50 seconds at a minimum temperature of 760 °C.

(d) Flares shall used to comply with this subpart shall comply with the requirements of § 60.18.

(e) Owners or operators of control devices that are used to comply with the provisions of this supbart shall monitor these control devices to ensure that they are operated and maintained in conformance with their design.

(f) Except as provided in paragraphs (i) through (k) of this section, each closed vent system shall be inspected according to the procedures and schedule specified in paragraph (f)(1) or (2) of this section, as applicable.

(1) If the vapor collection system or closed vent system is constructed of hard-piping, the owner or operator shall comply with the following requirements:

(i) Conduct an initial inspection according to the procedures in § 61.245(b); and

(ii) Conduct annual visual inspections for visible, audible, or olfactory indications of leaks.

(2) If the vapor collection system or closed vent system is constructed of ductwork, the owner or operator shall:

(i) Conduct an initial inspection according to the procedures in § 61.245(b); and

(ii) Conduct annual inspections according to the procedures in § 61.245(b).

(g) Leaks, as indicated by an instrument reading greater than 500 parts per million by volume above background or by visual inspections, shall be repaired as soon as practicable except as provided in paragraph (h) of this section.

(1) A first attempt at repair shall be made no later than 5 calendar days after the leak is detected.

(2) Repair shall be completed no later than 15 calendar days after the leak is detected.

(h) Delay of repair of a closed vent system for which leaks have been detected is allowed if the repair is technically infeasible without a process unit shutdown, or if the owner or operator determines that emissions resulting from immediate repair would be greater than the fugitive emissions likely to result from delay of repair. Repair of such equipment shall be complete by the end of the next process unit shutdown.

(i) If a vapor collection system or closed vent system is operated under a vacuum, it is exempt from the inspection requirements of paragraphs (f)(1)(i) and (2) of this section.

(j) Any parts of the closed vent system that are designated, as described in paragraph (l)(1) of this section, as unsafe-to-inspect are exempt from the inspection requirements of paragraphs (f)(1)(i) and (2) of this section if they comply with the following requirements:

(1) The owner or operator determines that the equipment is unsafe-to-inspect because inspecting personnel would be exposed to an imminent or potential danger as a consequence of complying with paragraph (f)(1)(i) or (2) of this section; and

(2) The owner or operator has a written plan that requires inspection of the equipment as frequently as practicable during safe-to-inspect times.

(k) Any parts of the closed vent system that are designated, as described in paragraph (l)(2) of this section, as difficult-to-inspect are exempt from the inspection requirements of paragraphs (f)(1)(i) and (2) of this section if they comply with the following requirements:

(1) The owner or operator determines that the equipment cannot be inspected without elevating the inspecting personnel more than 2 meters above a support surface; and

(2) The owner or operator has a written plan that requires inspection of the equipment at least once every 5 years. A closed vent system is exempt from inspection if it is operated under a vacuum.

(l) The owner or operator shall record the following information:

(1) Identification of all parts of the closed vent system that are designated as unsafe-to-inspect, an explanation of why the equipment is unsafe-to-inspect, and the plan for inspecting the equipment.

(2) Identification of all parts of the closed vent system that are designated as difficult-to-inspect, an explanation of why the equipment is difficult-to-inspect, and the plan for inspecting the equipment.

(3) For each inspection during which a leak is detected, a record of the information specified in §61.246(c).

(4) For each inspection conducted in accordance with §61.245(b) during which no leaks are detected, a record that the inspection was performed, the date of the inspection, and a statement that no leaks were detected.

(5) For each visual inspection conducted in accordance with paragraph (f)(1)(ii) of this section during which no leaks are detected, a record that the inspection was performed, the date of the inspection, and a statement that no leaks were detected.

(m) Closed vent systems and control devices used to comply with provisions of this subpart shall be operated at all times when emissions may be vented to them.

[49 FR 23513, June 6, 1984; 49 FR 38946, Oct. 2, 1984, as amended at 51 FR 2702, Jan. 21, 1986; 65 FR 62158, Oct. 17, 2000; 65 FR 78282, Dec. 14, 2000]

§61.243–1 Alternative standards for valves in VHAP service—allowable percentage of valves leaking.

(a) An owner or operator may elect to have all valves within a process unit to comply with an allowable percentage of valves leaking of equal to or less than 2.0 percent.

(b) The following requirements shall be met if an owner or operator decides to comply with an allowable percentage of valves leaking:

(1) An owner or operator must notify the Administrator that the owner or operator has elected to have all valves within a process unit to comply with the allowable percentage of valves leaking before implementing this alternative standard, as specified in §61.247(d).

(2) A performance test as specified in paragraph (c) of this section shall be conducted initially upon designation, annually, and at other times requested by the Administrator.

(3) If a valve leak is detected, it shall be repaired in accordance with §61.242–7(d) and (e).

(c) Performance tests shall be conducted in the following manner:

(1) All valves in VHAP service within the process unit shall be monitored within 1 week by the methods specified in §61.245(b).

(2) If an instrument reading of 10,000 ppm or greater is measured, a leak is detected.

(3) The leak percentage shall be determined by dividing the number of valves in VHAP service for which leaks are detected by the number of valves in VHAP service within the process unit.

(d) Owner or operators who elect to have all valves comply with this alternative standard shall not have a process unit with a leak percentage greater than 2.0 percent.

(e) If an owner or operator decides no longer to comply with §61.243–1, the owner or operator must notify the Administrator in writing that the work practice standard described in §61.242–7(a)-(e) will be followed.

§61.243–2 Alternative standards for valves in VHAP service—skip period leak detection and repair.

(a)(1) An owner or operator may elect for all valves within a process unit to comply with one of the alternative work practices specified in paragraphs (b)(2) and (3) of this section.

(2) An owner or operator must notify the Administrator before implementing one of the alternative work practices, as specified in §61.247(d).

(b)(1) An owner or operator shall comply initially with the requirements for valves, as described in §61.242–7.

(2) After 2 consecutive quarterly leak detection periods with the percentage of valves leaking equal to or less than 2.0, an owner or operator may begin to skip one of the quarterly leak detection periods for the valves in VHAP service.

(3) After five consecutive quarterly leak detection periods with the percentage of valves leaking equal to or less than 2.0, an owner or operator may begin to skip three of the quarterly leak detection periods for the valves in VHAP service.

(4) If the percentage of valves leaking is greater than 2.0, the owner or operator shall comply with the requirements as described in § 61.242–7 but may again elect to use this section.

[49 FR 23513, June 6, 1984, as amended at 65 FR 62158, Oct. 17, 2000]

§ 61.244 Alternative means of emission limitation.

(a) Permission to use an alternative means of emission limitation under section 112(e)(3) of the Clean Air Act shall be governed by the following procedures:

(b) Where the standard is an equipment, design, or operational requirement:

(1) Each owner or operator applying for permission shall be responsible for collecting and verifying test data for an alternative means of emission limitation to test data for the equipment, design, and operational requirements.

(2) The Administrator may condition the permission on requirements that may be necessary to assure operation and maintenance to achieve the same emission reduction as the equipment, design, and operational requirements.

(c) Where the standard is a work practice:

(1) Each owner or operator applying for permission shall be responsible for collecting and verifying test data for an alternative means of emission limitation.

(2) For each source for which permission is requested, the emission reduction achieved by the required work practices shall be demonstrated for a minimum period of 12 months.

(3) For each source for which permission is requested, the emission reduction achieved by the alternative means of emission limitation shall be demonstrated.

(4) Each owner or operator applying for permission shall commit in writing each source to work practices that provide for emission reductions equal to or greater than the emission reductions achieved by the required work practices.

(5) The Administrator will compare the demonstrated emission reduction for the alternative means of emission limitation to the demonstrated emission reduction for the required work practices and will consider the commitment in paragraph (c)(4).

(6) The Administrator may condition the permission on requirements that may be necessary to assure operation and maintenance to achieve the same emission reduction as the required work practices of this subpart.

(d) An owner or operator may offer a unique approach to demonstrate the alternative means of emission limitation.

(e)(1) Manufacturers of equipment used to control equipment leaks of a VHAP may apply to the Administrator for permission for an alternative means of emission limitation that achieves a reduction in emissions of the VHAP achieved by the equipment, design, and operational requirements of this subpart.

(2) The Administrator will grant permission according to the provisions of paragraphs (b), (c), and (d).

[49 FR 23513, June 6, 1984, as amended at 65 FR 62158, Oct. 17, 2000]

§ 61.245 Test methods and procedures.

(a) Each owner or operator subject to the provisions of this subpart shall comply with the test methods and procedures requirements provided in this section.

(b) Monitoring, as required in §§ 61.242, 61.243, 61.244, and 61.135, shall comply with the following requirements:

(1) Monitoring shall comply with Method 21 of appendix A of 40 CFR part 60.

(2) The detection instrument shall meet the performance criteria of Method 21.

(3) The instrument shall be calibrated before use on each day of its use by the procedures specified in Method 21.

(4) Calibration gases shall be:

(i) Zero air (less than 10 ppm of hydrocarbon in air); and

(ii) A mixture of methane or n-hexane and air at a concentration of

approximately, but less than, 10,000 ppm methane or n-hexane.

(5) The instrument probe shall be traversed around all potential leak interfaces as close to the interface as possible as described in Method 21.

(c) When equipment is tested for compliance with or monitored for no detectable emissions, the owner or operator shall comply with the following requirements:

(1) The requirements of paragraphs (b) (1) through (4) shall apply.

(2) The background level shall be determined, as set forth in Method 21.

(3) The instrument probe shall be traversed around all potential leak interfaces as close to the interface as possible as described in Method 21.

(4) The arithmetic difference between the maximum concentration indicated by the instrument and the background level is compared with 500 ppm for determining compliance.

(d)(1) Each piece of equipment within a process unit that can conceivably contain equipment in VHAP service is presumed to be in VHAP service unless an owner or operator demonstrates that the piece of equipment is not in VHAP service. For a piece of equipment to be considered not in VHAP service, it must be determined that the percent VHAP content can be reasonably expected never to exceed 10 percent by weight. For purposes of determining the percent VHAP content of the process fluid that is contained in or contacts equipment, procedures that conform to the methods described in ASTM Method D–2267 (incorporated by the reference as specified in §61.18) shall be used.

(2)(i) An owner or operator may use engineering judgment rather than the procedures in paragraph (d)(1) of this section to demonstrate that the percent VHAP content does not exceed 10 percent by weight, provided that the engineering judgment demonstrates that the VHAP content clearly does not exceed 10 percent by weight. When an owner or operator and the Administrator do not agree on whether a piece of equipment is not in VHAP service, however, the procedures in paragraph (d)(1) of this section shall be used to resolve the disagreement.

(ii) If an owner or operator determines that a piece of equipment is in VHAP service, the determination can be revised only after following the procedures in paragraph (d)(1) of this section.

(3) Samples used in determining the percent VHAP content shall be representative of the process fluid that is contained in or contacts the equipment or the gas being combusted in the flare.

(e)(1) Method 22 of appendix A of 40 CFR part 60 shall be used to determine compliance of flares with the visible emission provisions of this subpart.

(2) The presence of a flare pilot flame shall be monitored using a thermocouple or any other equivalent device to detect the presence of a flame.

(3) The net heating value of the gas being combusted in a flare shall be calculated using the following equation:

$$H_T = K\left(\sum_{i=1}^{n} C_i H_i\right)$$

Where:

H_T = Net heating value of the sample, MJ/scm (BTU/scf); where the net enthalpy per mole of offgas is based on combustion at 25 °C and 760 mm Hg (77 °F and 14.7 psi), but the standard temperature for determining the volume corresponding to one mole is 20 °C (68 °F).

K = conversion constant, 1.740×10^7 (g-mole) (MJ)/(ppm-scm-kcal) (metric units); or 4.674×10^8 ((g-mole) (Btu)/(ppm-scf-kcal)) (English units)

Ci = Concentration of sample component ''i'' in ppm, as measured by Method 18 of appendix A to 40 CFR part 60 and ASTM D2504–67, 77, or 88 (Reapproved 1993) (incorporated by reference as specified in §61.18).

H_i = net heat of combustion of sample component ''i'' at 25 °C and 760 mm Hg (77 °F and 14.7 psi), kcal/g-mole. The heats of combustion may be determined using ASTM D2382–76 or 88 or D4809–95 (incorporated by reference as specified in §61.18) if published values are not available or cannot be calculated.

(4) The actual exit velocity of a flare shall be determined by dividing the volumetric flowrate (in units of standard temperature and pressure), as determined by Method 2, 2A, 2C, or 2D, as appropriate, by the unobstructed (free) cross section area of the flare tip.

(5) The maximum permitted velocity, $V_{max,}$ for air-assisted flares shall be determined by the following equation:

$$V_{max} = K_1 + K_2 H_T$$

Where:

V_{max} = Maximum permitted velocity, m/sec (ft/sec).

H_T = Net heating value of the gas being combusted, as determined in paragraph (e)(3) of this section, MJ/scm (Btu/scf).

K_1 = 8.706 m/sec (metric units)
= 28.56 ft/sec (English units)

K_2 = 0.7084 m^4/(MJ-sec) (metric units)
= 0.087 ft^4/(Btu-sec) (English units)

[49 FR 23513, June 6, 1984, as amended at 49 FR 38946, Oct. 2, 1984; 49 FR 43647, Oct. 31, 1984; 53 FR 36972, Sept. 23, 1988; 54 FR 38077, Sept. 14, 1989; 65 FR 62158, Oct. 17, 2000]

§ 61.246 Recordkeeping requirements.

(a)(1) Each owner or operator subject to the provisions of this subpart shall comply with the recordkeeping requirements of this section.

(2) An owner or operator of more than one process unit subject to the provisions of this subpart may comply with the recordkeeping requirements for these process units in one recordkeeping system if the system identifies each record by each process unit.

(b) When each leak is detected as specified in §§ 61.242–2, 61.242–3, 61.242–7, 61.242–8, and 61.135, the following requirements apply:

(1) A weatherproof and readily visible identification, marked with the equipment identification number, shall be attached to the leaking equipment.

(2) The identification on a valve may be removed after it has been monitored for 2 successive months as specified in § 61.242–7(c) and no leak has been detected during those 2 months.

(3) The identification on equipment, except on a valve, may be removed after it has been repaired.

(c) When each leak is detected as specified in §§ 61.242–2, 61.242–3. 61.242–7, 61.242–8, and 61.135, the following information shall be recorded in a log and shall be kept for 2 years in a readily accessible location:

(1) The instrument and operator identification numbers and the equipment identification number.

(2) The date the leak was detected and the dates of each attempt to repair the leak.

(3) Repair methods applied in each attempt to repair the leak.

(4) ''Above 10,000'' if the maximum instrument reading measured by the methods specified in § 61.245(a) after each repair attempt is equal to or greater than 10,000 ppm.

(5) ''Repair delayed'' and the reason for the delay if a leak is not repaired within 15 calendar days after discovery of the leak.

(6) The signature of the owner or operator (or designate) whose decision it was that repair could not be effected without a process shutdown.

(7) The expected date of successful repair of the leak if a leak is not repaired within 15 calendar days.

(8) Dates of process unit shutdowns that occur while the equipment is unrepaired.

(9) The date of successful repair of the leak.

(d) The following information pertaining to the design requirements for closed-vent systems and control devices described in § 61.242–11 shall be recorded and kept in a readily accessible location:

(1) Detailed schematics, design specifications, and piping and instrumentation diagrams.

(2) The dates and descriptions of any changes in the design specifications.

(3) A description of the parameter or parameters monitored, as required in § 61.242–11(e), to ensure that control devices are operated and maintained in conformance with their design and an explanation of why that parameter (or parameters) was selected for the monitoring.

(4) Periods when the closed-vent systems and control devices required in §§ 61.242–2, 61.242–3, 61.242–4, 61.242–5 and 61.242–9 are not operated as designed, including periods when a flare pilot light does not have a flame.

(5) Dates of startups and shutdowns of the closed-vent systems and control devices required in §§ 61.242–2, 61.242–3, 61.242–4, 61.242–5 and 61.242–9.

(e) The following information pertaining to all equipment to which a standard applies shall be recorded in a log that is kept in a readily accessible location:

(1) A list of identification numbers for equipment (except welded fittings) subject to the requirements of this subpart.

(2)(i) A list of identification numbers for equipment that the owner or operator elects to designate for no detectable emissions as indicated by an instrument reading of less than 500 ppm above background.

(ii) The designation of this equipment for no detectable emissions shall be signed by the owner or operator.

(3) A list of equipment identification numbers for pressure relief devices required to comply with §61.242–4(a).

(4)(i) The dates of each compliance test required in §§61.242–2(e), 61.242–3(i), 61.242–4, 61.242–7(f), and 61.135(g).

(ii) The background level measured during each compliance test.

(iii) The maximum instrument reading measured at the equipment during each compliance test.

(5) A list of identification numbers for equipment in vacuum service.

(f) The following information pertaining to all valves subject to the requirements of §61.242–7(g) and (h) and to all pumps subject to the requirements of §61.242–2(g) shall be recorded in a log that is kept in a readily accessible location:

(1) A list of identification numbers for valves and pumps that are designated as unsafe to monitor, an explanation for each valve or pump stating why the valve or pump is unsafe to monitor, and the plan for monitoring each valve or pump.

(2) A list of identification numbers for valves that are designated as difficult to monitor, an explanation for each valve stating why the valve is difficult to monitor, and the planned schedule for monitoring each valve.

(g) The following information shall be recorded for valves complying with §61.243–2:

(1) A schedule of monitoring.

(2) The percent of valves found leaking during each monitoring period.

(h) The following information shall be recorded in a log that is kept in a readily accessible location:

(1) Design criterion required in §§61.242–2(d)(5), 61.242–3(e)(2), and 61.135(e)(4) and an explanation of the design criterion; and

(2) Any changes to this criterion and the reasons for the changes.

(i) The following information shall be recorded in a log that is kept in a readily accessible location for use in determining exemptions as provided in the applicability section of this subpart and other specific subparts:

(1) An analysis demonstrating the design capacity of the process unit, and

(2) An analysis demonstrating that equipment is not in VHAP service.

(j) Information and data used to demonstrate that a piece of equipment is not in VHAP service shall be recorded in a log that is kept in a readily accessible location.

[49 FR 23513, June 6, 1984, as amended at 49 FR 38946, Oct. 2, 1984; 54 FR 38077, Sept. 14, 1989; 65 FR 78283, Dec. 14, 2000]

§61.247 Reporting requirements.

(a)(1) An owner or operator of any piece of equipment to which this subpart applies shall submit a statement in writing notifying the Administrator that the requirements of §§61.242, 61.245, 61.246, and 61.247 are being implemented.

(2) In the case of an existing source or a new source which has an initial startup date preceding the effective date, the statement is to be submitted within 90 days of the effective date, unless a waiver of compliance is granted under §61.11, along with the information required under §61.10. If a waiver of compliance is granted, the statement is to be submitted on a date scheduled by the Administrator.

(3) In the case of new sources which did not have an initial startup date preceding December 14, 2000, the statement required under paragraph (a)(1) of this section shall be submitted with the application for approval of construction, as described in §61.07.

(4) For owners and operators complying with 40 CFR part 65, subpart C or F, the statement required under paragraph (a)(1) of this section shall notify the Administrator that the requirements of 40 CFR part 65, subpart C or F, are being implemented.

(5) The statement is to contain the following information for each source:

(i) Equipment identification number and process unit identification.

(ii) Type of equipment (for example, a pump or pipeline valve).

(iii) Percent by weight VHAP in the fluid at the equipment.

(iv) Process fluid state at the equipment (gas/vapor or liquid).

(v) Method of compliance with the standard (for example, ''monthly leak detection and repair'' or ''equipped with dual mechanical seals'').

(b) A report shall be submitted to the Administrator semiannually starting 6 months after the initial report required in paragraph (a) of this section, that includes the following information:

(1) Process unit identification.

(2) For each month during the semiannual reporting period,

(i) Number of valves for which leaks were detected as described in §61.242–7(b) of §61.243–2.

(ii) Number of valves for which leaks were not repaired as required in §61.242–7(d).

(iii) Number of pumps for which leaks were detected as described in §61.242–2 (b) and (d)(6).

(iv) Number of pumps for which leaks were not repaired as required in §61.242–2 (c) and (d)(6).

(v) Number of compressors for which leaks were detected as described in §61.242–3(f).

(vi) Number of compressors for which leaks were not repaired as required in §61.242–3(g).

(vii) The facts that explain any delay of repairs and, where appropriate, why a process unit shutdown was technically infeasible.

(3) Dates of process unit shutdowns which occurred within the semiannual reporting period.

(4) Revisions to items reported according to paragraph (a) if changes have occurred since the initial report or subsequent revisions to the initial report.

NOTE: Compliance with the requirements of §61.10(c) is not required for revisions documented under this paragraph.

(5) The results of all performance tests and monitoring to determine compliance with no detectable emissions and with §§61.243—1 and 61.243—2 conducted within the semiannual reporting period.

(c) In the first report submitted as required in paragraph (a) of this section, the report shall include a reporting schedule stating the months that semiannual reports shall be submitted. Subsequent reports shall be submitted according to that schedule, unless a revised schedule has been submitted in a previous semiannual report.

(d) An owner or operator electing to comply with the provisions of §§61.243–1 and 61.243–2 shall notify the Administrator of the alternative standard selected 90 days before implementing either of the provisions.

(e) An application for approval of construction or modification, §§61.05(a) and 61.07, will not be required if—

(1) The new source complies with the standard, §61.242;

(2) The new source is not part of the construction of a process unit; and

(3) In the next semiannual report required by paragraph (b) of this section, the information in paragraph (a)(5) of this section is reported.

(f) For owners or operators choosing to comply with 40 CFR part 65, subpart C or F, an application for approval of construction or modification, as required under §§61.05 and 61.07 will not be required if:

(1) The new source complies with 40 CFR 65.106 through 65.115 and with 40 CFR part 65, subpart C, for surge control vessels and bottoms receivers;

(2) The new source is not part of the construction of a process unit; and

(3) In the next semiannual report required by 40 CFR 65.120(b) and 65.48(b), the information in paragraph (a)(5) of this section is reported.

[49 FR 23513, June 6, 1984, as amended at 49 FR 38947, Oct. 2, 1984; 54 FR 38077, Sept. 14, 1989; 65 FR 78283, Dec. 14, 2000]

TABLE 1 TO PART 61, SUBPART V—SURGE CONTROL VESSELS AND BOTTOMS RECEIVERS AT EXISTING SOURCES

Vessel capacity (cubic meters)	Vapor pressure [1] (kilopascals)
75 ≤ capacity < 151	≥ 13.1
151 ≤ capacity	≥ 5.2

[1] Maximum true vapor pressure as defined in §61.241.

[65 FR 78283, Dec. 14, 2000]

TABLE 2 TO PART 61, SUBPART V—SURGE CONTROL VESSELS AND BOTTOMS RECEIVERS AT NEW SOURCES

Vessel capacity (cubic meters)	Vapor pressure [1] (kilopascals)
38 ≤ capacity < 151	≥ 13.1

Vessel capacity (cubic meters)	Vapor pressure [1] (kilopascals)
151 ≤ capacity	≥ 0.7

[1] Maximum true vapor pressure as defined in § 61.241.

[65 FR 78283, Dec. 14, 2000]

Subpart W—National Emission Standards for Radon Emissions From Operating Mill Tailings

SOURCE: 54 FR 51703, Dec. 15, 1989, unless otherwise noted.

§ 61.250 Designation of facilities.

The provisions of this subpart apply to owners or operators of facilities licensed to manage uranium byproduct materials during and following the processing of uranium ores, commonly referred to as uranium mills and their associated tailings. This subpart does not apply to the disposal of tailings.

§ 61.251 Definitions.

As used in this subpart, all terms not defined here have the meaning given them in the Clean Air Act or 40 CFR part 61, subpart A. The following terms shall have the following specific meanings:

(a) *Area* means the vertical projection of the pile upon the earth's surface.

(b) *Continuous disposal* means a method of tailings management and disposal in which tailings are dewatered by mechanical methods immediately after generation. The dried tailings are then placed in trenches or other disposal areas and immediately covered to limit emissions consistent with applicable Federal standards.

(c) *Dewatered* means to remove the water from recently produced tailings by mechanical or evaporative methods such that the water content of the tailings does not exceed 30 percent by weight.

(d) *Existing impoundment* means any uranium mill tailings impoundment which is licensed to accept additional tailings and is in existence as of December 15, 1989.

(e) *Operation* means that an impoundment is being used for the continued placement of new tailings or is in standby status for such placement. An impoundment is in operation from the day that tailings are first placed in the impoundment until the day that final closure begins.

(f) *Phased disposal* means a method of tailings management and disposal which uses lined impoundments which are filled and then immediately dried and covered to meet all applicable Federal standards.

(g) *Uranium byproduct material or tailings* means the waste produced by the extraction or concentration of uranium from any ore processed primarily for its source material content. Ore bodies depleted by uranium solution extraction and which remain underground do not constitute byproduct material for the purposes of this subpart.

§ 61.252 Standard.

(a) Radon-222 emissions to the ambient air from an existing uranium mill tailings pile shall not exceed 20 pCi/(m^2-sec) (1.9 pCi/(ft^2-sec)) of radon-222.

(b) After December 15, 1989, no new tailings impoundment can be built unless it is designed, constructed and operated to meet one of the two following work practices:

(1) Phased disposal in lined tailings impoundments that are no more than 40 acres in area and meet the requirements of 40 CFR 192.32(a) as determined by the Nuclear Regulatory Commission. The owner or operator shall have no more than two impoundments, including existing impoundments, in operation at any one time.

(2) Continuous disposal of tailings such that tailings are dewatered and immediately disposed with no more than 10 acres uncovered at any time and operated in accordance with § 192.32(a) as determined by the Nuclear Regulatory Commission.

(c) All mill owners or operators shall comply with the provisions of 40 CFR 192.32(a) in the operation of tailings piles, the exemption for existing piles in 40 CFR 192.32(a) notwithstanding.

[54 FR 51703, Dec. 15, 1989, as amended at 65 FR 62159, Oct. 17, 2000]

§ 61.253 Determining compliance.

Compliance with the emission standard in this subpart shall be determined annually through the use of Method 115

of appendix B. When measurements are to be made over a one year period, EPA shall be provided with a schedule of the measurement frequency to be used. The schedule may be submitted to EPA prior to or after the first measurement period. EPA shall be notified 30 days prior to any emissions test so that EPA may, at its option, observe the test.

§ 61.254 Annual reporting requirements.

(a) The owners or operators of operating existing mill impoundments shall report the results of the compliance calculations required in § 61.253 and the input parameters used in making the calculation for each calendar year shall be sent to EPA by March 31 of the following year. Each report shall also include the following information:

(1) The name and location of the mill.

(2) The name of the person responsible for the operation of the facility and the name of the person preparing the report (if different).

(3) The results of the testing conducted, including the results of each measurement.

(4) Each report shall be signed and dated by a corporate officer in charge of the facility and contain the following declaration immediately above the signature line: ''I certify under penalty of law that I have personally examined and am familiar with the information submitted herein and based on my inquiry of those individuals immediately responsible for obtaining the information, I believe that the submitted information is true, accurate and complete. I am aware that there are significant penalties for submitting false information including the possibility of fine and imprisonment. See, 18 U.S.C. 1001.''

(b) If the facility is not in compliance with the emission limits of § 61.252 in the calendar year covered by the report, then the facility must commence reporting to the Administrator on a monthly basis the information listed in paragraph (a) of this section, for the preceding month. These reports will start the month immediately following the submittal of the annual report for the year in noncompliance and will be due 30 days following the end of each month. This increased level of reporting will continue until the Administrator has determined that the monthly reports are no longer necessary. In addition to all the information required in paragraph (a) of this section, monthly reports shall also include the following information:

(1) All controls or other changes in operation of the facility that will be or are being installed to bring the facility into compliance.

(2) If the facility is under a judicial or administrative enforcement decree, the report will describe the facilities performance under the terms of the decree.

(c) The first report will cover the emissions of calendar year 1990.

§ 61.255 Recordkeeping requirements.

The owner or operator of the mill must maintain records documenting the source of input parameters including the results of all measurements upon which they are based, the calculations and/or analytical methods used to derive values for input parameters, and the procedure used to determine compliance. In addition, the documentation should be sufficient to allow an independent auditor to verify the accuracy of the determination made concerning the facility's compliance with the standard. These records must be kept at the mill for at least five years and upon request be made available for inspection by the Administrator, or his authorized representative.

§ 61.256 Exemption from the reporting and testing requirements of 40 CFR 61.10.

All facilities designated under this subpart are exempt from the reporting requirements of 40 CFR 61.10.

Subpart X [Reserved]

Subpart Y—National Emission Standard for Benzene Emissions From Benzene Storage Vessels

SOURCE: 54 FR 38077, Sept. 14, 1989, unless otherwise noted.

§61.270 Applicability and designation of sources.

(a) The source to which this subpart applies is each storage vessel that is storing benzene having a specific gravity within the range of specific gravities specified in ASTM D836–84 for Industrial Grade Benzene, ASTM D835–85 for Refined Benzene-485, ASTM D2359–85a or 93 for Refined Benzene-535, and ASTM D4734–87 or 96 for Refined Benzene-545. These specifications are incorporated by reference as specified in §61.18. See §61.18 for acceptable versions of these methods.

(b) Except for paragraph (b) in §61.276, storage vessels with a design storage capacity less than 38 cubic meters (10,000 gallons) are exempt from the provisions of this subpart.

(c) This subpart does not apply to storage vessels used for storing benzene at coke by-product facilities.

(d) This subpart does not apply to vessels permanently attached to motor vehicles such as trucks, rail cars, barges, or ships.

(e) This subpart does not apply to pressure vessels designed to operate in excess of 204.9 kPa (29.72 psia) and without emissions to the atmosphere.

(f) A designated source subject to the provisions of this subpart that is also subject to applicable provisions of 40 CFR part 60 subparts K, Ka, and Kb shall be required to comply only with the subpart that contains the most stringent requirements for that source.

(g) *Alternative means of compliance*—(1) *Option to comply with part 65.* Owners or operators may choose to comply with 40 CFR part 65, subpart C, to satisfy the requirements of §§61.271 through 61.277, except for §§61.271(d)(2) and 61.274(a) for storage vessels that are subject to this subpart. Other provisions applying to owners or operators who choose to comply with 40 CFR part 65 are provided in 40 CFR 65.1.

(2) *Part 61, subpart A.* Owners or operators who choose to comply with 40 CFR part 65, subpart C, must also comply with §§61.01, 61.02, 61.05 through 61.08, 61.10(b) through (d), 61.11, and 61.15 for those storage vessels. All sections and paragraphs of subpart A of this part that are not mentioned in this paragraph (g)(2) do not apply for storage vessels complying with 40 CFR part 65, subpart C, except that provisions required to be met prior to implementing 40 CFR part 65 still apply. Owners and operators who choose to comply with 40 CFR part 65, subpart C, must comply with 40 CFR part 65, subpart A.

[54 FR 38077, Sept. 14, 1989, as amended at 65 FR 62159, Oct. 17, 2000; 65 FR 78283, Dec. 14, 2000]

§61.271 Emission standard.

The owner or operator of each storage vessel with a design storage capacity greater than or equal to 38 cubic meters (10,000 gallons) to which this subpart applies shall comply with the requirements in paragraph (d) of this section and with the requirements either in paragraph (a), (b), or (c) of this section, or equivalent as provided in §61.273.

(a) The storage vessel shall be equipped with a fixed roof and an internal floating roof.

(1) An internal floating roof means a cover that rests on the liquid surface (but not necessarily in complete contact with it) inside a storage vessel that has a permanently affixed roof. The internal floating roof shall be floating on the liquid surface at all times, except during initial fill and during those intervals when the storage vessel is completely emptied or subsequently emptied and refilled. When the roof is resting on the leg supports, the process of filling, emptying, or refilling shall be continuous and shall be accomplished as rapidly as possible.

(2) Each internal floating roof shall be equipped with one of the closure devices listed in paragraphs (a)(2) (i), (ii), or (iii) of this section between the wall of the storage vessel and the edge of the internal floating roof. This requirement does not apply to each existing storage vessel for which construction of an internal floating roof equipped with a continuous seal commenced on or before July 28, 1988. A continuous seal means a seal that forms a continuous closure that completely covers the space between the wall of the storage vessel and the edge of the internal floating roof.

(i) A foam- or liquid-filled seal mounted in contact with the liquid

(liquid-mounted seal). A liquid-mounted seal means a foam- or liquid-filled seal mounted in contact with the liquid between the wall of the storage vessel and the floating roof continuously around the circumference of the vessel.

(ii) Two seals mounted one above the other so that each forms a continuous closure that completely covers the space between the wall of the storage vessel and the edge of the internal floating roof. The lower seal may be vapor-mounted, but both must be continuous.

(iii) A metallic shoe seal. A metallic shoe seal (also referred to as a mechanical shoe seal) is, but is not limited to, a metal sheet held vertically against the wall of the storage vessel by springs or weighted levers and is connected by braces to the floating roof. A flexible coated fabric (envelope) spans the annular space between the metal sheet and the floating roof.

(3) Automatic bleeder vents are to be closed at all times when the roof is floating, except when the roof is being floated off or is being landed on the roof leg supports.

(4) Each opening in a noncontact internal floating roof except for automatic bleeder vents (vacuum breaker vents) and the rim space vents is to provide a projection below the liquid surface.

(5) Each internal floating roof shall meet the specifications listed below. If an existing storage vessel had an internal floating roof with a continuous seal as of July 28, 1988, the requirements listed below do not have to be met until the first time after September 14, 1989, the vessel is emptied and degassed or September 14, 1999, whichever occurs first,

(i) Each opening in the internal floating roof except for leg sleeves, automatic bleeder vents, rim space vents, column wells, ladder wells, sample wells, and stub drains is to be equipped with a cover or lid. The cover or lid shall be equipped with a gasket. Covers on each access hatch and automatic gauge float well shall be bolted.

(ii) Each penetration of the internal floating roof for the purposes of sampling shall be a sample well. Each sample well shall have a slit fabric cover that covers at least 90 percent of the opening.

(iii) Each automatic bleeder vent shall be gasketed.

(iv) Rim space vents shall be equipped with a gasket.

(v) Each penetration of the internal floating roof that allows for passage of a ladder shall have a gasketed sliding cover.

(vi) Each penetration of the internal floating roof that allows for passage of a column supporting the fixed roof shall have a flexible fabric sleeve seal or a gasketed sliding cover.

(6) Each cover or lid on any opening in the internal floating roof shall be closed (i.e., no visible gaps), except when a device is in actual use Covers on each access hatch and each automatic gauge float well which are equipped with bolts shall be bolted when they are not in use. Rim space vents are to be set to open only when the internal floating roof is not floating or at the manufacturer's recommended setting.

(b) The storage vessel shall have an external floating roof.

(1) An external floating roof means a pontoon-type or double-deck-type cover that rests on the liquid surface in a vessel with no fixed roof.

(2) Each external floating roof shall be equipped with a closure device between the wall of the storage vessel and the roof edge. Except as provided in paragraph (b)(5) of this section, the closure device is to consist of two seals, one above the other. The lower seal is referred to as the primary seal and the upper seal is referred to as the secondary seal.

(i) The primary seal shall be either a metallic shoe seal or a liquid-mounted seal. A liquid-mounted seal means a foam- or liquid-filled seal mounted in contact with the liquid between the wall of the storage vessel and the floating roof continuously around the circumference of the vessel. A metallic shoe seal (which can also be referred to as a mechanical shoe seal) is, but is not limited to, a metal sheet held vertically against the wall of the storage vessel by springs or weighted levers and is connected by braces to the floating roof. A flexible coated fabric (envelope) spans the annular space between

the metal sheet and the floating roof. Except as provided in §61.272(b)(4), the primary seal shall completely cover the annular space between the edge of the floating roof and the vessel wall.

(ii) The secondary seal shall completely cover the annular space between the external floating roof and the wall of the storage vessel in a continuous fashion except as allowed in §61.272(b)(4).

(3) Except for automatic bleeder vents and rim space vents, each opening in the noncontact external floating roof shall provide a projection below the liquid surface. Except for automatic bleeder vents, rim space vents, roof drains, and leg sleeves, each opening in the roof is to be equipped with a gasketed cover, seal or lid which is to be maintained in a closed position at all times (i.e., no visible gap) except when the device is in actual use. Automatic bleeder vents are to be closed at all times when the roof is floating, except when the roof is being floated off or is being landed on the roof leg supports. Rim vents are to be set to open when the roof is being floated off the roof leg supports or at the manufacturer's recommended setting. Automatic bleeder vents and rim space vents are to be gasketed. Each emergency roof drain is to be provided with a slotted membrane fabric cover that covers at least 90 percent of the area of the opening.

(4) The roof shall be floating on the liquid at all times (i.e., off the roof leg supports) except during initial fill until the roof is lifted off leg supports and when the vessel is completely emptied and subsequently refilled. The process of emptying and refilling when the roof is resting on the leg supports shall be continuous and shall be accomplished as rapidly as possible.

(5) The requirement for a secondary seal does not apply to each existing storage vessel that was equipped with a liquid-mounted primary seal as of July 28, 1988, until after the first time after September 14, 1989, when the vessel is emptied and degassed or 10 years from September 14, 1989, whichever occurs first.

(c) The storage vessel shall be equipped with a closed vent system and a control device.

(1) The closed vent system shall be designed to collect all benzene vapors and gases discharged from the storage vessel and operated with no detectable emissions, as indicated by an instrument reading of less than 500 ppm above background and visual inspections, as determined in §61.242–11 (subpart V).

(2) The control device shall be designed and operated to reduce inlet benzene emissions by 95 percent or greater. If a flare is used as the control device, it shall meet the specifications described in the general control device requirements of 40 CFR 60.18.

(3) The specifications and requirements listed in paragraphs (c)(1) and (c)(2) of this section for closed vent systems and control devices do not apply during periods of routine maintenance. During periods of routine maintenance, the benzene level in the storage vessel(s) serviced by the control device subject to the provisions of §61.271(c) may be lowered but not raised. Periods of routine maintenance shall not exceed 72 hours as outlined in the maintenance plan required by §61.272(c)(1)(iii).

(4) The specifications and requirements listed in paragraphs (c)(1) and (c)(2) of this section for closed vents and control devices do not apply during a control system malfunction. A control system malfunction means any sudden and unavoidable failure of air pollution control equipment. A failure caused entirely or in part by design deficiencies, poor maintenance, careless operation, or other preventable upset condition or equipment breakdown is not considered a malfunction.

(d) The owner or operator of each affected storage vessel shall meet the requirements of paragraph (a), (b), or (c) of this section or §61.270(g) as follows:

(1) The owner or operator of each existing benzene storage vessel shall meet the requirements of paragraph (a), (b), or (c) of this section no later than 90 days after September 14, 1989, with the exceptions noted in paragraphs (a)(5) and (b)(5), unless a waiver of compliance has been approved by the Administrator in accordance with §61.11.

(2) The owner or operator of each benzene storage vessel upon which construction commenced after September 14, 1989 shall meet the requirements of paragraph (a), (b), or (c) of this section or § 61.270(g) prior to filling (*i.e.*, roof is lifted off leg supports) the storage vessel with benzene.

(3) The owner or operator of each benzene storage vessel upon which construction commenced on or after July 28, 1988, and before September 14, 1989, shall meet the requirements of paragraph (a), (b), or (c) of this section on September 14, 1989.

[54 FR 38077, Sept. 14, 1989; 54 FR 50887, Dec. 11, 1989, as amended at 65 FR 78284, Dec. 14, 2000]

§ 61.272 Compliance provisions.

(a) For each vessel complying with § 61.271(a) (fixed roof and internal floating roof) each owner or operator shall:

(1) After installing the control equipment required to comply with § 61.271(a), visually inspect the internal floating roof, the primary seal, and the secondary seal (if one is in service), prior to filling the storage vessel with benzene. If there are holes, tears or other openings in the primary seal, the secondary seal, or the seal fabric, or defects in the internal floating roof, the owner or operator shall repair the items before filling the storage vessel.

(2) Visually inspect the internal floating roof and the primary seal or the secondary seal (if one is in service) through manholes and roof hatches on the fixed roof at least once every 12 months after initial fill, or at least once every 12 months after September 14, 1989, except as provided in paragraph (a)(4)(i) of this section. If the internal floating roof is not resting on the surface of the benzene liquid inside the storage vessel, or there is liquid on the roof, or the seal is detached, or there are holes or tears in the seal fabric, the owner or operator shall repair the items or empty and remove the storage vessel from service within 45 days. If a failure that is detected during inspections required in this paragraph cannot be repaired within 45 days and if the vessel cannot be emptied within 45 days, an extension of up to 30 additional days may be requested from the Administrator in the inspection report required in § 61.275(a). Such a request for an extension must document that alternate storage capacity is unavailable and specify a schedule of actions the company will take that will ensure that the control equipment will be repaired or the vessel will be emptied as soon as possible.

(3) Visually inspect the internal floating roof, the primary seal, the secondary seal (if one is in service), gaskets, slotted membranes and sleeve seals (if any) each time the storage vessel is emptied and degassed. In no event shall inspections conducted in accordance with this provision occur at intervals greater than 10 years in the case of vessels conducting the annual visual inspections as specified in paragraph (a)(2) of this section and at intervals greater than 5 years in the case of vessels specified in paragraph (a)(4)(i) of this section.

(i) For all the inspections required by paragraphs (a)(1) and (a)(3) of this section, the owner or operator shall notify the Administrator in writing at least 30 days prior to the refilling of each storage vessel to afford the Administrator the opportunity to have an observer present. If the inspection required by paragraph (a)(3) of this section is not planned and the owner or operator could not have known about the inspection 30 days in advance of refilling the vessel, the owner or operator shall notify the Administrator at least 7 days prior to the refilling of the storage vessel. Notification shall be made by telephone immediately followed by written documentation demonstrating why the inspection was unplanned. Alternatively, the notification including the written documentation may be made in writing and sent by express mail so that it is received by the Administrator at least 7 days prior to refilling.

(ii) If the internal floating roof has defects, the primary seal has holes, tears, or other openings in the seal or the seal fabric, or the secondary seal has holes, tears, or other openings in the seal or the seal fabric, or the gaskets no longer close off the liquid surfaces from the atmosphere, or the slotted membrane has more than 10 percent open area, the owner or operator shall repair the items as necessary so

that none of the conditions specified in this paragraph exist before refilling the storage vessel with benzene.

(4) For vessels equipped with a double-seal system as specified in §61.271(a)(2)(ii):

(i) Visually inspect the vessel as specified in paragraph (a)(3) of this section at least every 5 years; or

(ii) Visually inspect the vessel annually as specified in paragraph (a)(2) of this section, and at least every 10 years as specified in paragraph (a)(3) of this section.

(b) For each vessel complying with §61.271(b) (external floating roof) the owner or operator shall:

(1) Determine the gap areas and maximum gap widths between the primary seal and the wall of the storage vessel, and the secondary seal and the wall of the storage vessel according to the following frequency.

(i) For an external floating roof vessel equipped with primary and secondary seals, measurements of gaps between the vessel wall and the primary seal (seal gaps) shall be performed during the hydrostatic testing of the vessel or within 90 days of the initial fill with benzene or within 90 days of September 14, 1989, whichever occurs last, and at least once every 5 years thereafter, except as provided in paragraph (b)(1)(ii) of this section.

(ii) For an external floating roof vessel equipped with a liquid-mounted primary seal and without a secondary seal as provided for in §61.271(b)(5), measurement of gaps between the vessel wall and the primary seal (seal gaps) shall be performed within 90 days of September 14, 1989, and at least once per year thereafter. When a secondary seal is installed over the primary seal, measurement of primary seal gaps shall be performed within 90 days of installation and at least once every 5 years thereafter.

(iii) For an external floating roof vessel equipped with primary and secondary seals, measurements of gaps between the vessel wall and the secondary seal shall be performed within 90 days of the initial fill with benzene, within 90 days of installation of the secondary seal, or within 90 days after September 14, 1989, whichever occurs last, and at least once per year thereafter.

(iv) If any source ceases to store benzene for a period of 1 year or more, subsequent introduction of benzene into the vessel shall be considered an initial fill for the purposes of paragraphs (b)(1)(i), (b)(1)(ii), and (b)(1)(iii) of this section.

(2) Determine gap widths and areas in the primary and secondary seals individually by the following procedures:

(i) Measure seal gaps, if any, at one or more floating roof levels when the roof is floating off the roof leg supports.

(ii) Measure seal gaps around the entire circumference of the vessel in each place where a 0.32 centimeter (cm) (1/8 in) diameter uniform probe passes freely (without forcing or binding against the seal) between the seal and the wall of the storage vessel and measure the circumferential distance of each such location.

(iii) The total surface area of each gap described in paragraph (b)(2)(ii) of this section shall be determined by using probes of various widths to measure accurately the actual distance from the vessel wall to the seal and multiplying each such width by its respective circumferential distance.

(3) Add the gap surface area of each gap location for the primary seal and the secondary seal individually. Divide the sum for each seal by the nominal diameter of the vessel and compare each ratio to the respective standards in §61.272(b)(4) and §61.272(b)(5).

(4) Repair conditions that do not meet requirements listed in paragraph (b)(4) (i) and (ii) within 45 days of identification in any inspection or empty and remove the storage vessel from service within 45 days.

(i) The accumulated area of gaps between the vessel wall and the metallic shoe seal or the liquid-mounted primary seal shall not exceed 212 cm^2 per meter of vessel diameter (10.0 in^2 per foot of vessel diameter) and the width of any portion of any gap shall not exceed 3.81 cm (1½ in).

(A) One end of the metallic shoe is to extend into the stored liquid and the other end is to extend a minimum vertical distance of 61 cm (24 in) above the stored liquid surface.

(B) There are to be no holes, tears, or other openings in the shoe, seal fabric, or seal envelope.

(ii) The secondary seal is to meet the following requirements:

(A) The secondary seal is to be installed above the primary seal so that it completely covers the space between the roof edge and the vessel wall except as provided in paragraph (b)(4)(ii)(B) of this section.

(B) The accumulated area of gaps between the vessel wall and the secondary seal shall not exceed 21.2 cm^2 per meter of vessel diameter (1.0 in^2 per foot of vessel diameter) or the width of any portion of any gap shall not exceed 1.27 cm (½ in). These seal gap requirements may be exceeded during the measurement of primary seal gaps as required by paragraph (b)(1)(i) or (b)(1)(ii) of this section.

(C) There are to be no holes, tears, or other openings in the seal or seal fabric.

(iii) If a failure that is detected during inspections required in this paragraph cannot be repaired within 45 days and if the vessel cannot be emptied within 45 days, an extension of up to 30 additional days may be requested from the Administrator in the inspection report required in § 61.275(d). Such extension request must include a demonstration of unavailability of alternate storage capacity and a specification of a schedule that will assure that the control equipment will be repaired or the vessel will be emptied as soon as possible.

(5) The owner or operator shall notify the Administrator 30 days in advance of any gap measurements required by paragraph (b)(1) of this section to afford the Administrator the opportunity to have an observer present.

(6) Visually inspect the external floating roof, the primary seal, secondary seal, and fittings each time the vessel is emptied and degassed.

(i) If the external floating roof has defects, the primary seal has holes, tears, or other openings in the seal or the seal fabric, or the secondary seal has holes, tears, or other openings in the seal or the seal fabric, the owner or operator shall repair the items as necessary so that none of the conditions specified in this paragraph exist before filling or refilling the storage vessel with benzene.

(ii) For all the inspections required by paragraph (b)(6) of this section, the owner or operator shall notify the Administrator in writing at least 30 days prior to filling or refilling of each storage vessel to afford the Administrator the opportunity to inspect the storage vessel prior to refilling. If the inspection required by paragraph (b)(6) of this section is not planned and the owner or operator could not have known about the inspection 30 days in advance of refilling the vessel, the owner or operator shall notify the Administrator at least 7 days prior to refilling of the storage vessel. Notification shall be made by telephone immediately followed by written documentation demonstrating why the inspection was unplanned. Alternatively, this notification including the written documentation may be made in writing and sent by express mail so that it is received by the Administrator at least 7 days prior to the refilling.

(c) The owner or operator of each source that is equipped with a closed vent system and control device as required in § 60.271(c), other than a flare, shall meet the following requirements.

(1) Within 90 days after initial fill or after September 14, 1989, whichever comes last, submit for approval by the Administrator, an operating plan containing the information listed below.

(i) Documentation demonstrating that the control device being used achieves the required control efficiency during reasonably expected maximum loading conditions. This documentation is to include a description of the gas stream which enters the control device, including flow and benzene content under varying liquid level conditions (dynamic and static) and manufacturer's design specifications for the control device. If the control device or the closed vent capture system receives vapors, gases or liquids, other than fuels, from sources that are not designated sources under this subpart, the efficiency demonstration is to include consideration of all vapors, gases and liquids received by the closed vent capture system and control device. If an enclosed combustion device with a

minimum residence time of 0.75 seconds and a minimum temperature of 816 °C (1,500 °F) is used to meet the 95 percent requirement, documentation that those conditions exist is sufficient to meet the requirements of this paragraph.

(ii) A description of the parameter or parameters to be monitored to ensure that the control device is operated and maintained in conformance with its design and an explanation of the criteria used for selection of that parameter (or parameters).

(iii) A maintenance plan for the system including the type of maintenance necessary, planned frequency of maintenance, and lengths of maintenance periods for those operations that would require the closed vent system or the control device to be out of compliance with §61.271(c). The maintenance plan shall require that the system be out of compliance with §61.271(c) for no more than 72 hours per year.

(2) Operate, monitor the parameters, and maintain the closed vent system and control device in accordance with the operating plan submitted to the Administrator in accordance with paragraph (c)(1) of this section, unless the plan was modified by the Administrator during the approval process. In this case, the modified plan applies.

(d) The owner or operator of each source that is equipped with a closed vent system and a flare to meet the requirements in §61.271(c) shall meet the requirements as specified in the general control device requirements in 40 CFR 60.18 (e) and (f).

[54 FR 38077, Sept. 14, 1989, as amended at 65 FR 62159, Oct. 17, 2000]

§61.273 Alternative means of emission limitation.

(a) Upon written application from any person, the Administrator may approve the use of alternative means of emission limitation which have been demonstrated to his satisfaction to achieve a reduction in benzene emissions at least equivalent to the reduction in emissions achieved by any requirement in §61.271 (a), (b), or (c) of this subpart.

(b) Determination of equivalence to the reduction in emissions achieved by the requirements of §61.271 (a), (b), or (c) will be evaluated using the following information to be included in the written application to the Administrator:

(1) Actual emissions tests that use full-size or scale-model storage vessels that accurately collect and measure all benzene emissions from a given control device, and that accurately simulate wind and account for other emission variables such as temperature and barometric pressure.

(2) An engineering evaluation that the Administrator determines is an accurate method of determining equivalence.

(c) The Administrator may condition approval of equivalency on requirements that may be necessary to ensure operation and maintenance to achieve the same emission reduction as the requirements of §61.271 (a), (b), or (c).

(d) If, in the Administrator's judgment, an application for equivalence may be approvable, the Administrator will publish a notice of preliminary determination in the FEDERAL REGISTER and provide the opportunity for public hearing. After notice and opportunity for public hearing, the Administrator will determine the equivalence of the alternative means of emission limitation and will publish the final determination in the FEDERAL REGISTER.

§61.274 Initial report.

(a) The owner or operator of each storage vessel to which this subpart applies and which has a design capacity greater than or equal to 38 cubic meters (10,000 gallons) shall submit an initial report describing the controls which will be applied to meet the equipment requirements of §61.271 or §61.270(g). For an existing storage vessel or a new storage vessel for which construction and operation commenced prior to September 14, 1989, this report shall be submitted within 90 days of September 14, 1989 and can be combined with the report required by §61.10. For a new storage vessel for which construction or operation commenced on or after September 14, 1989, the report shall be combined with the report required by §61.07 or 40 CFR 65.5(b). In the case where the owner or operator seeks to comply with §61.271(c), with a control device other than a flare, this

information may consist of the information required by § 61.272(c)(1).

(b) The owner or operator of each storage vessel seeking to comply with § 61.271(c) with a flare, shall submit a report containing the measurements required by 40 CFR 60.18(f) (1), (2), (3), (4), (5), and (6). For the owner or operator of an existing storage vessel not seeking to obtain a waiver or a new storage vessel for which construction and operation commenced prior to September 14, 1989, this report shall be combined with the report required by paragraph (a) of this section. For the owner or operator of an existing storage vessel seeking to obtain a waiver, the reporting date will be established in the response to the waiver request. For the owner or operator of a new storage vessel for which construction or operation commenced after September 14, 1989, the report shall be submitted within 9O days of the date the vessel is initially filled (or partially filled) with benzene.

[54 FR 38077, Sept. 14, 1989, as amended at 65 FR 78284, Dec. 14, 2000]

§ 61.275 Periodic report.

(a) The owner or operator of each storage vessel to which this subpart applies after installing control equipment in accordance with § 61.271(a) (fixed roof and internal floating roof) shall submit a report describing the results of each inspection conducted in accordance with § 61.272(a). For vessels for which annual inspections are required under § 61.272(a)(2), the first report is to be submitted no more than 12 months after the initial report submitted in accordance with § 61.274, and each report is to be submitted within 60 days of each annual inspection.

(1) Each report shall include the date of the inspection of each storage vessel and identify each storage vessel in which:

(i) The internal floating roof is not resting on the surface of the benzene liquid inside the storage vessel, or there is liquid on the roof, or the seal is detached from the internal floating roof, or there are holes, tears or other openings in the seal or seal fabric; or

(ii) There are visible gaps between the seal and the wall of the storage vessel.

(2) Where an annual report identifies any condition in paragraph (a)(1) of this section the annual report shall describe the nature of the defect, the date the storage vessel was emptied, and the nature of an date the repair was made, except as provided in paragraph (a)(3) of this section.

(3) If an extension is requested in an annual periodic report in accordance with § 61.272(a)(2), a supplemental periodic report shall be submitted within 15 days of repair. The supplemental periodic report shall identify the vessel and describe the date the storage vessel was emptied and the nature of and date the repair was made.

(b) The owner or operator of each storage vessel to which this subpart applies after installing control equipment in accordance with § 61.271(a) (fixed roof and internal floating roof) shall submit a report describing the results of each inspection conducted in accordance with § 61.272(a) (3) or (4).

(1) The report is to be submitted within 60 days of conducting each inspection required by § 61.272(a) (3) or (4).

(2) Each report shall identify each storage vessel in which the owner or operator finds that the internal floating roof has defects, the primary seal has holes, tears, or other openings in the seal or the seal fabric, or the secondary seal (if one has been installed) has holes, tears, or other openings in the seal or the seal fabric, or the gaskets no longer close off the liquid surfaces from the atmosphere, or the slotted membrane has more than 10 percent open area. The report shall also describe the nature of the defect, the date the storage vessel was emptied, and the nature of and date the repair was made.

(c) Any owner or operator of an existing storage vessel which had an internal floating roof with a continuous seal as of July 28, 1988, and which seeks to comply with the requirements of § 61.271(a)(5) during the first time after September 14, 1989, when the vessel is emptied and degassed but no later than 10 years from September 14, 1989, shall notify the Administrator 30 days prior to the completion of the installation of such controls and the date of refilling of the vessel so the Administrator has an opportunity to have an observer

present to inspect the storage vessel before it is refilled. This report can be combined with the one required by §61.275(b).

(d) The owner or operator of each storage vessel to which this subpart applies after installing control equipment in accordance with §61.271(b) (external floating roof) shall submit a report describing the results of each seal gap measurement made in accordance with §61.272(b). The first report is to be submitted no more than 12 months after the initial report submitted in accordance with §61.274(a), and each annual periodic report is to be submitted within 60 days of each annual inspection.

(1) Each report shall include the date of the measurement, the raw data obtained in the measurement, and the calculations described in §61.272(b) (2) and (3), and shall identify each storage vessel which does not meet the gap specifications of §61.272(b). Where an annual report identifies any vessel not meeting the seal gap specifications of §61.272(b) the report shall describe the date the storage vessel was emptied, the measures used to correct the condition and the date the storage vessel was brought into compliance.

(2) If an extension is requested in an annual periodic report in accordance with §61.272(b)(4)(iii), a supplemental periodic report shall be submitted within 15 days of repair. The supplemental periodic report shall identify the vessel and describe the date the vessel was emptied and the nature of and date the repair was made.

(e) Excess emission report.

(1) The owner or operator of each source seeking to comply with §61.271(c) (vessels equipped with closed vent systems with control devices) shall submit a quarterly report informing the Administrator of each occurrence that results in excess emissions. Excess emissions are emissions that occur at any time when compliance with the specifications and requirements of §61.271(c) are not achieved, as evidenced by the parameters being measured in accordance with §61.272(c)(1)(ii) if a control device other than a flare is used, or by the measurements required in §61.272(d) and the general control device requirements in 40 CFR 60.18(f) (1) and (2) if a flare is used.

(2) The owner or operator shall submit the following information as a minimum in the report required by (e)(1) of this section:

(i) Identify the stack and other emission points where the excess emissions occurred;

(ii) A statement of whether or not the owner or operator believes a control system malfunction has occurred.

(3) If the owner or operator states that a control system malfunction has occurred, the following information as a minimum is also to be included in the report required under paragraph (e)(1) of this section:

(i) Time and duration of the control system malfunction as determined by continuous monitoring data (if any), or the inspections or monitoring done in accordance with the operating plan required by §61.272(c).

(ii) Cause of excess emissions.

§61.276 Recordkeeping.

(a) Each owner or operator with a storage vessel subject to this subpart shall keep copies of all the reports and records required by this subpart for at least 2 years, except as specified in paragraphs (b) and (c)(1) of this section.

(b) Each owner or operator with a storage vessel, including any vessel which has a design storage capacity less than 38 cubic meters (10,000 gallons), shall keep readily accessible records showing the dimensions of the storage vessel and an analysis showing the capacity of the storage vessel. This record shall be kept as long as the storage vessel is in operation. Each storage vessel with a design capacity of less than 38 cubic meters (10,000 gallons) is subject to no provisions of this subpart other than those required by this paragraph.

(c) The following information pertaining to closed vent system and control devices shall be kept in a readily accessible location.

(1) A copy of the operating plan. This record shall be kept as long as the closed vent system and control device is in use.

(2) A record of the measured values of the parameters monitored in accordance with §61.272(c)(1)(ii) and §61.272(c)(2).

(3) A record of the maintenance performed in accordance with §61.272(c)(1)(iii) of the operating plan, including the following:

(i) The duration of each time the closed vent system and control device does not meet the specifications of §61.271(c) due to maintenance, including the following:

(A) The first time of day and date the requirements of 61.271(c) were not met at the beginning of maintenance.

(B) The first time of day and date the requirements of §61.271(c) were met at the conclusion of maintenance.

(C) A continuous record of the liquid level in each storage vessel that the closed vent system and control device receive vapors from during the interval between the times specified by (c)(3)(i)(A) and (c)(3)(i)(B). Pumping records (simultaneous input and output) may be substituted for records of the liquid level.

§ 61.277 Delegation of authority.

(a) In delegating implementation and enforcement authority to a State under section 112(d) of the Act, the authorities contained in paragraph (b) of this section shall be retained by the Administrator and not transferred to a State.

(b) Authorities which will not be delegated to States: §61.273.

Subparts Z–AA [Reserved]

Subpart BB—National Emission Standard for Benzene Emissions From Benzene Transfer Operations

SOURCE: 55 FR 8341, Mar. 7, 1990, unless otherwise noted.

§ 61.300 Applicability.

(a) The affected facility to which this subpart applies is the total of all loading racks at which benzene is loaded into tank trucks, railcars, or marine vessels at each benzene production facility and each bulk terminal. However, specifically exempted from this regulation are loading racks at which only the following are loaded: Benzene-laden waste (covered under subpart FF of this part), gasoline, crude oil, natural gas liquids, petroleum distillates (e.g., fuel oil, diesel, or kerosene), or benzene-laden liquid from coke by-product recovery plants.

(b) Any affected facility under paragraph (a) of this section which loads only liquid containing less than 70 weight-percent benzene is exempt from the requirements of this subpart, except for the recordkeeping and reporting requirements in §61.305(i).

(c) *Comply with standards at each loading rack.* Any affected facility under paragraph (a) of this section shall comply with the standards in §61.302 or as specified in paragraph (f) of this section, if applicable, at each loading rack that is handling a liquid containing 70 weight-percent or more benzene.

(d) Any affected facility under paragraph (a) of this section whose annual benzene loading is less than 1.3 million liters of 70 weight-percent or more benzene is exempt from the requirements of this subpart, except for the recordkeeping and reporting requirements in §61.305(i).

(e) The owner or operator of an affected facility, as defined in §61.300(a) that loads a marine vessel shall be in compliance with the provisions of this subpart on and after July 23, 1991. If an affected facility that loads a marine vessel also loads a tank truck or railcar, the marine vessel loading racks shall be in compliance with the provisions of this subpart on and after July 23, 1991, while the tank truck loading racks and the railcar loading racks shall be in compliance as required by §61.12.

(f) *Alternative means of compliance.* (1) *Option to comply with part 65.* Owners or operators may choose to comply with 40 CFR part 65, subpart E, to satisfy the requirements of §§61.302 through 61.306 for all tank truck or railcar loading racks that are subject to this subpart. Loading racks are referred to as transfer racks in 40 CFR part 65, subpart E. Other provisions applying to owners or operators who choose to comply with 40 CFR part 65 are provided in 40 CFR 65.1. All marine vessel

loading racks shall comply with the provisions in §§61.302 through 61.306.

(2) *Part 61, subpart A.* Owners or operators who choose to comply with 40 CFR part 65, subpart E, must also comply with §§61.01, 61.02, 61.05 through 61.08, 61.10(b) through (d), 61.11, and 61.15 for those loading racks. All sections and paragraphs of subpart A of this part that are not mentioned in this paragraph (f)(2) do not apply to owners or operators of loading racks complying with 40 CFR part 65, subpart E, except that provisions required to be met prior to implementing 40 CFR part 65 still apply. Owners and operators who choose to comply with 40 CFR part 65, subpart E, must comply with 40 CFR part 65, subpart A.

[55 FR 8341, Mar. 7, 1990, as amended at 55 FR 45804, Oct. 31, 1990; 65 FR 78284, Dec. 14, 2000]

§61.301 Definitions.

As used in this subpart, all terms not defined herein shall have the meaning given them in the Act, or in subpart A or subpart V of part 61.

Bulk terminal means any facility which receives liquid product containing benzene by pipelines, marine vessels, tank trucks, or railcars, and loads the product for further distribution into tank trucks, railcars, or marine vessels.

Car-sealed means having a seal that is placed on the device used to change the position of a valve (e.g., from open to closed) such that the position of the valve cannot be changed without breaking the seal and requiring the replacement of the old seal, once broken, with a new seal.

Control device means all equipment used for recovering or oxidizing benzene vapors displaced from the affected facility.

Incinerator means any enclosed combustion device that is used for destroying organic compounds and that does not extract energy in the form of steam or process heat. These devices do not rely on the heating value of the waste gas to sustain efficient combustion. Auxiliary fuel is burned in the device and the heat from the fuel flame heats the waste gas to combustion temperature. Temperature is controlled by controlling combustion air or fuel.

Leak means any instrument reading of 10,000 ppmv or greater using Method 21 of 40 CFR part 60, appendix A.

Loading cycle means the time period from the beginning of filling a tank truck, railcar, or marine vessel until flow to the control device ceases, as measured by the flow indicator.

Loading rack means the loading arms, pumps, meters, shutoff valves, relief valves, and other piping and valves necessary to fill tank trucks, railcars, or marine vessels.

Marine vessel means any tank ship or tank barge which transports liquid product such as benzene.

Nonvapor tight means any tank truck, railcar, or marine vessel that does not pass the required vapor-tightness test.

Process heater means a device that transfers heat liberated by burning fuel to fluids contained in tubes, except water that is heated to produce steam.

Steam generating unit means any enclosed combustion device that uses fuel energy in the form of steam.

Vapor collection system means any equipment located at the affected facility used for containing benzene vapors displaced during the loading of tank trucks, railcars, or marine vessels. This does not include the vapor collection system that is part of any tank truck, railcar, or marine vessel vapor collection manifold system.

Vapor-tight marine vessel means a marine vessel with a benzene product tank that has been demonstrated within the preceding 12 months to have no leaks. This demonstration shall be made using Method 21 of part 60, appendix A, during the last 20 percent of loading and during a period when the vessel is being loaded at its maximum loading rate. A reading of greater than 10,000 ppm as methane shall constitute a leak. As an alternative, a marine vessel owner or operator may use the vapor-tightness test described in §61.304(f) to demonstrate vapor tightness. A marine vessel operated at negative pressure is assumed to be vapor-tight for the purpose of this standard.

Vapor-tight tank truck or *vapor-tight railcar* means a tank truck or railcar for which it has been demonstrated within the preceding 12 months that its product tank will sustain a pressure change of not more than 750 pascals

within 5 minutes after it is pressurized to a minimum of 4,500 pascals. This capability is to be demonstrated using the pressure test procedure specified in Method 27 of appendix A to 40 CFR part 60, and a pressure measurement device which has a precision of ±2.5 mm water and which is capable of measuring above the pressure at which the tank truck or railcar is to be tested for vapor tightness.

[55 FR 8341, Mar. 7, 1990, as amended at 65 FR 62159, Oct. 17, 2000]

§ 61.302 Standards.

(a) The owner or operator of an affected facility shall equip each loading rack with a vapor collection system that is:

(1) Designed to collect all benzene vapors displaced from tank trucks, railcars, or marine vessels during loading, and

(2) Designed to prevent any benzene vapors collected at one loading rack from passing through another loading rack to the atmosphere.

(b) The owner or operator of an affected facility shall install a control device and reduce benzene emissions routed to the atmosphere through the control device by 98 weight percent. If a boiler or process heater is used to comply with the percent reduction requirement, then the vent stream shall be introduced into the flame zone of such a device.

(c) The owner or operator of an affected facility shall operate any flare used to comply with paragraph (b) of this section in accordance with the requirements of § 60.18 (b) through (f).

(d) The owner or operator of an affected facility shall limit loading of benzene into vapor-tight tank trucks and vapor-tight railcars using the following procedures:

(1) The owner or operator shall obtain the vapor-tightness documentation described in § 61.305(h) for each tank truck or railcar loaded at the affected facility. The test date in the documentation must be within the preceding 12 months. The vapor-tightness test to be used for tank trucks and railcars is Method 27 of appendix A to 40 CFR part 60.

(2) The owner or operator shall cross-check the identification number for each tank truck or railcar to be loaded with the file of vapor-tightness documentation before the corresponding tank truck or railcar is loaded. If no documentation is on file, the owner or operator shall obtain a copy of the information from the tank truck or railcar operator before the tank truck or railcar is loaded.

(3) Alternate procedures to those described in paragraphs (d)(1) and (d)(2) of this section may be used upon application to, and approval by, the Administrator.

(e) The owner or operator of an affected facility shall limit the loading of marine vessels to those vessels that are vapor tight as determined by either paragraph (e)(1), (e)(2), (e)(3), or (e)(4) of this section.

(1) The owner or operator of an affected facility shall ensure that each marine vessel is loaded with the benzene product tank below atmospheric pressure (i.e., at negative pressure). If the pressure is measured at the interface between the shoreside vapor collection pipe and the marine vessel vapor line, the pressure measured according to the procedures in § 61.303(f) must be below atmospheric pressure.

(2) The owner or operator of an affected facility shall use the following procedure to obtain the vapor-tightness documentation described in § 61.305(h). The vapor-tightness test for marine vessels is Method 21 of appendix A to 40 CFR part 60, and shall be applied to any potential sources of vapor leaks. A reading of 10,000 ppmv or greater as methane shall constitute a leak.

(i) The owner or operator of an affected facility shall obtain the leak test documentation described in § 61.305(h) for each marine vessel prior to loading, if available. The date of the test listed in the documentation must be within the 12 preceding months.

(ii) If there is no documentation of a successful leak test conducted on the marine vessel in the preceding 12 months, the owner or operator of an affected facility shall require that a leak test of the marine vessel be conducted during the final 20 percent of loading of the marine vessel or shall not load the vessel. The test shall be conducted when the marine vessel is being loaded

at the maximum allowable loading rate.

(A) If no leak is detected, the owner or operator of an affected facility shall require that the documentation described in §61.305(h) is completed prior to departure of the vessel. The owner or operator of the affected facility shall retain a copy of the vapor-tightness documentation on file.

(B) If any leak is detected, the owner or operator of an affected facility shall require that the vapor-tightness failure be documented for the marine vessel owner or operator prior to departure of the vessel. The owner or operator of the affected facility shall retain a copy of the vapor-tightness documentation on file. Delay of repair of equipment for which leaks have been detected will be allowed if the repair is technically infeasible without dry-docking the vessel. This equipment will be excluded from future Method 21 of appendix A to 40 CFR part 60 tests until repairs are effected. Repair of this equipment shall occur the next time the vessel is dry-docked.

(iii) If the marine vessel has failed its most recent vapor-tightness test as described in §61.302(e)(2)(ii), the owner or operator of the affected facility shall require that the owner or operator of the nonvapor-tight marine vessel provide documentation that the leaks detected during the previous vapor-tightness test have been repaired, or proof that repair is technically infeasible without dry-docking the vessel. Once the repair documentation has been provided, the owner or operator may load the marine vessel. The owner or operator shall require that the vapor-tightness test described in §61.302(e)(2)(ii) be conducted during loading, and shall retain a copy of the vapor-tightness documentation on file.

(3) The owner or operator of an affected facility shall obtain a copy of the marine vessel's vapor-tightness documentation described in §61.305(h) for a test conducted within the preceding 12 months in accordance with §61.304(f).

(4) Alternate procedures to those described in paragraphs (e)(1), (e)(2) and (e)(3) of this section may be used upon application to, and approval by, the Administrator.

(f) The owner or operator of an affected facility shall limit loading of benzene to tank trucks, railcars, and marine vessels equipped with vapor collection equipment that is compatible with the affected facility's vapor collection system.

(g) The owner or operator of an affected facility shall limit loading of tank trucks, railcars, and marine vessels to tank trucks, railcars, and marine vessels whose collection systems are connected to the affected facility's vapor collection systems.

(h) The owner or operator of an affected facility shall ensure that the vapor collection and benzene loading equipment of tank trucks and railcars shall be designed and operated to prevent gauge pressure in the tank truck or railcar tank from exceeding, during loading, the initial pressure the tank was pressured up to and shown to be vapor tight at during the most recent vapor-tightness test using Method 27 of appendix A to 40 CFR part 60. This vapor-tightness test pressure is not to be exceeded when measured by the procedures specified in §61.304(c).

(i) The owner or operator of an affected facility shall ensure that no pressure-vacuum vent in the affected facility's vapor collection system for tank trucks and railcars shall begin to open at a system pressure less than the maximum pressure at which the tank truck or railcar is operated.

(j) The owner or operator of an affected facility shall ensure that the maximum normal operating pressure of the marine vessel's vapor collection equipment shall not exceed 0.8 times the relief set pressure of the pressure-vacuum vents. This level is not to be exceeded when measured by the procedures specified in §61.304(d).

(k) The owner or operator of an affected facility shall inspect the vapor collection system and the control device for detectable emissions, and shall repair any leaks detected, in accordance with §61.242–11 (e) and (f). This inspection of the vapor collection system and control device shall be done during the loading of tank trucks, railcars, or marine vessels.

(l) Vent systems that contain valves that could divert a vent stream from a control device shall have car-sealed

opened all valves in the vent system from the emission source to the control device, and car-sealed closed all valves in the vent system that would lead the vent stream to the atmosphere, either directly or indirectly, bypassing the control device.

[55 FR 8341, Mar. 7, 1990, as amended at 65 FR 62159, Oct. 17, 2000]

§ 61.303 Monitoring requirements.

(a) Each owner or operator of an affected facility that uses an incinerator to comply with the percent reduction requirement specified under § 61.302(b) shall install, calibrate, maintain, and operate according to manufacturer's specifications a temperature monitoring device equipped with a continuous recorder and having an accuracy of ±1 percent of the combustion temperature being measured expressed in degrees Celsius or ±0.5°C, whichever is greater.

(1) Where an incinerator other than a catalytic incinerator is used, the owner or operator of the affected facility shall install a temperature monitoring device in the firebox.

(2) Where a catalytic incinerator is used, the owner or operator shall install temperature monitoring devices in the gas stream immediately before and after the catalyst bed.

(b) Each owner or operator of an affected facility that uses a flare to comply with § 61.302(b) shall install, calibrate, maintain, and operate according to manufacturer's specifications a heat sensing device, such as an ultraviolet beam sensor or thermocouple, at the pilot light to indicate the presence of a flame during the entire loading cycle.

(c) Each owner or operator of an affected facility that uses a steam generating unit or process heater to comply with § 61.302(b) shall comply with the following requirements. Where a steam generating unit with a design heat input capacity of less than 44 MW (150×10^6 BTU/hr) is used to comply with § 61.302(b), the owner or operator of an affected facility shall comply with paragraph (c)(1) of this section. Where a steam generating unit or process heater with a design heat input capacity of 44 MW (150×10^6 BTU/hr) or greater is used to comply with § 61.302(b), the owner or operator of an affected facility shall comply with paragraph (c)(2) of this section.

(1) Install in the firebox, calibrate, maintain, and operate according to manufacturer's specifications a temperature monitoring device equipped with a continuous recorder and having an accuracy of ±1 percent of the temperature being measured expressed in degrees Celsius or ±0.5°C, whichever is greater, for steam generating units or process heaters of less than 44 MW (150×10^6 BTU/hr) design heat input capacity.

(2) Monitor and record the periods of operation of the steam generating units or process heater if the design heat input capacity of the steam generating unit or process heater is 44 MW (150×10^6 BTU/hr) or greater. The records must be readily available for inspection.

(d) Each owner or operator of an affected facility that uses a carbon adsorption system to comply with the percent reduction requirement specified under § 61.302(b) shall install, calibrate, maintain, and operate according to manufacturer's specifications a device that continuously indicates and records the concentration or reading of organic compounds in the outlet gas stream of each carbon adsorber bed.

(e) The owner or operator of an affected facility who wishes to demonstrate compliance with the standards specified under § 61.302(b) using control devices other than an incinerator, steam generating unit, process heater, carbon adsorber, or flare shall provide the Administrator with information describing the operation of the control device and the process parameter(s) that would indicate proper operation and maintenance of the device. The Administrator may request further information and will specify appropriate monitoring procedures or requirements.

(f) Each owner or operator of an affected facility complying with § 61.302(e)(1) shall install, calibrate, maintain, and operate a recording pressure measurement device (magnehelic gauge or equivalent device) and an audible and visible alarm system that is activated when the pressure vacuum specified in § 61.302(e)(1) is not attained. The owner or operator shall place the

alarm system so that it can be seen and heard where cargo transfer is controlled and on the open deck.

(g) Owners or operators using a vent system that contains valves that could divert a vent stream from a control device used to comply with the provisions of this subpart shall do one or a combination of the following:

(1) Install a flow indicator immediately downstream of each valve that if opened would allow a vent stream to bypass the control device and be emitted, either directly or indirectly, to the atmosphere. The flow indicator shall be capable of recording flow at least once every 15 minutes.

(2) Monitor the valves once a month, checking the position of the valves and the condition of the car seal, and identify all times when the car seals have been broken and the valve position has been changed (*i.e.*, from opened to closed for valves in the vent piping to the control device and from closed to open for valves that allow the stream to be vented directly or indirectly to the atmosphere).

[55 FR 8341, Mar. 7, 1990, as amended at 65 FR 62159, Oct. 17, 2000]

§61.304 Test methods and procedures.

(a) The procedures for determining compliance with §61.302(b) for all control devices other than flares is as follows:

(1) All testing equipment shall be prepared and installed as specified in the appropriate test methods.

(2) The time period for a performance test shall be not less than 6 hours, during which at least 300,000 liters of benzene are loaded. If the throughput criterion is not met during the initial 6 hours, the test may be either continued until the throughput criterion is met, or resumed the next day with at least another 6 complete hours of testing.

(3) For intermittent control devices:

(i) The vapor holder level of the intermittent control device shall be recorded at the start of the performance test. The end of the performance test shall coincide with the time when the vapor holder is at its original level.

(ii) At least two startups and shutdowns of the control device shall occur during the performance test. If this does not occur under an automatically controlled operation, the system shall be manually controlled.

(4) An emission testing interval shall consist of each 5-minute period during the performance test. For each interval:

(i) The reading from each measurement instrument shall be recorded.

(ii) Method 1 or 1A of part 60, appendix A, as appropriate, shall be used for selection of the sampling site,

(iii) The volume exhausted shall be determined using Method 2, 2A, 2C, or 2D of part 60, appendix A, as appropriate.

(iv) The average benzene concentration upstream and downstream of the control device in the vent shall be determined using Method 25A or Method 25B of appendix A of this part, using benzene as the calibration gas. The average benzene concentration shall correspond to the volume measurement by taking into account the sampling system response time.

(5) The mass emitted during each testing interval shall be calculated as follows:

$$M_i = FKV_S C$$

where:

M_i=Mass of benzene emitted during testing interval i, kg.

V_s=Volume of air-vapor mixture exhausted, m^3 at standard conditions.

C=Benzene concentration (as measured) at the exhaust vent, ppmv.

K=Density, (kg/m^3 benzene), standard conditions.

K=3.25 for benzene.

F=Conversion factor, (m^3 benzene/m^3 air)(1/ppmv).

F=10/$^{-6}$/.

s=Standard conditions, 20 °C and 760 mm Hg.

(6) The benzene mass emission rates before and after the control device shall be calculated as follows:

$$E = \frac{\sum_{i=1}^{n} M_i}{T}$$

where:

E=Mass flow rate of benzene emitted, kg/hr.

M_i=Mass of benzene emitted during testing interval i, kg.

T=Total time of all testing intervals, hr.

n=Number of testing intervals.

(7) The percent reduction across the control device shall be calculated as follows:

$$R = \frac{E_b - E_a}{E_b}(100)$$

where:

R=Control efficiency of control device, %.

E_b=Mass flow rate of benzene prior to control device, kg/hr.

E_a=Mass flow rate of benzene after control device, kg/hr.

(b) When a flare is used to comply with §61.302(b), a performance test according to Method 22 of appendix A of 40 CFR part 60 shall be performed to determine visible emissions. The observation period shall be at least 2 hours. Performance testing shall be conducted during at least three complete loading cycles with a separate test run for each loading cycle. The observation period for detecting visible emissions shall encompass each loading cycle. Integrated sampling to measure process vent stream flow rate shall be performed continuously during each loading cycle.

(c) For the purpose of determining compliance with §61.302(h), the following procedures shall be used:

(1) Calibrate and install a pressure measurement device (liquid manometer, magnehelic gauge, or equivalent instrument), which has a precision of ±2.5 mm H_20 in the range that the tank truck or railcar was initially pressured to during the most recent vapor-tightness test.

(2) Connect the pressure measurement device to a pressure tap in the affected facility's vapor collection system, located as close as possible to the connection with the tank truck or railcar.

(3) During the performance test, record the pressure every 5 minutes while a tank truck or railcar is being loaded, and record the highest instantaneous pressure that occurs during each loading cycle. Every loading rack shall be tested at least once during the performance test.

(4) If more than one loading rack is used simultaneously, then the performance test shall be conducted simultaneously to represent the maximum capacity.

(d) For the purpose of determining compliance with §61.302(j), the following procedures shall be used:

(1) Calibrate and install a pressure measurement device (liquid manometer, magnehelic gauge, or equivalent instrument), capable of measuring up to the relief set pressure of the pressure-vacuum vents.

(2) Connect the pressure measurement device to a pressure tap in the affected facility's vapor collection system, located as close as possible to the connection with the marine vessel.

(3) During the performance test, record the pressure every 5 minutes while a marine vessel is being loaded, and record the highest instantaneous pressure that occurs during each loading cycle.

(e) Immediately prior to a performance test required for determination of compliance with §61.302(b), all potential sources of vapor leakage in the affected facility's vapor collection system equipment shall be inspected for detectable emissions as required in §61.302(k). The monitoring shall be conducted only while a vapor-tight tank truck, railcar, or marine vessel is being loaded. All identified leaks in the terminal's vapor collection system shall be repaired prior to conducting the performance test.

(f) The following test method shall be used to comply with the marine vessel vapor-tightness requirements of §61.302(e)(3):

(1) Each benzene product tank shall be pressurized with dry air or inert gas to not less than 1.0 psig and not more than the pressure of the lowest relief valve setting.

(2) Once the pressure is obtained, the dry air or inert gas source shall be shut off.

(3) At the end of one-half hour, the pressure in the benzene product tank and piping shall be measured. The change in pressure shall be calculated using the following formula:

$$\Delta P = P_i - P_f$$

where:

ΔP=Change in pressure, inches of water.

P_i=Pressure in tank when air/gas source is shut off, inches of water.

P_f=Pressure in tank at the end of one-half hour after air/gas source is shut off, inches of water.

(4) The change in pressure, Δ P, shall be compared to the pressure drop calculated using the following formula:

$$\Delta PM = 0.861\ P_{ia}\ L/V$$

where:

Δ PM=Maximum allowable pressure change, inches of water.

P_{ia}=Pressure in tank when air/gas source is shut off, pounds per square inch, absolute (psia).

L=Maximum permitted loading rate of vessel, barrels per hour.

V=Total volume of product tank, barrels.

(5) If $\Delta P \leq \Delta PM$, the vessel is vapor tight.

(6) If $\Delta P > \Delta PM$, the vessel is not vapor tight and the source of the leak must be identified and repaired prior to retesting.

[55 FR 8341, Mar. 7, 1990; 55 FR 12444, Apr. 3, 1990, as amended at 65 FR 62159, Oct. 17, 2000]

§61.305 Reporting and recordkeeping.

(a) Each owner or operator of an affected facility subject to the provisions of this subpart shall keep an up-to-date, readily accessible record of the following data measured during each performance test, and also include the following data in the report of the initial performance test required under §61.13. Where a steam generating unit or process heater with a design heat input capacity of 44 MW (150×10^6 BTU/hr) or greater is used to comply with §61.302(b), a report containing performance test data need not be submitted, but a report containing the information in §61.305(a)(3)(i) is required.

(1) Where an owner or operator subject to the provisions of this subpart is complying with §61.302(b) through use of an incinerator:

(i) The average firebox temperature of the incinerator (or the average temperature upstream and downstream of the catalyst bed), measured at least every 2 minutes during a loading cycle if the total time period of the loading cycle is less than 3 hours and every 15 minutes if the total time period of the loading cycle is equal to or greater than 3 hours. The measured temperature shall be averaged over the loading cycle.

(ii) The percent reduction of benzene determined as specified in §61.304(a) achieved by the incinerator.

(iii) The duration of the loading cycle.

(2) Where an owner or operator subject to the provisions of this subpart is complying with §61.302 (b) and (c) through use of a smokeless flare or other flare design (i.e., steam-assisted, air-assisted or nonassisted), all visible emission readings, heat content determination, flow rate measurements, maximum permitted velocity calculations, and exit velocity determinations made during the performance test, continuous records of the flare pilot flame monitoring measured continuously during the loading cycle, duration of all loading cycles and records of all loading cycles during which the pilot flame is absent for each vent stream.

(3) Where an owner or operator subject to the provisions of this subpart is complying with §61.302(b) through the use of a steam generating unit or process heater:

(i) A description of the location at which the vent stream is introduced into the steam generating unit or process heater.

(ii) The average combustion temperature of the steam generating unit or process heater with a design heat input capacity of less than 44 MW (150×10^6 BTU/hr), measured with the following frequency: at least every 2 minutes during a loading cycle if the total time period of the loading cycle is less than 3 hours, and every 15 minutes if the total time period of the loading cycle is equal to or greater than 3 hours. The measured temperature shall be averaged over the loading cycle.

(iii) The duration of the loading cycle.

(4) Where an owner or operator subject to the provisions of this subpart is complying with §61.302(b) through the use of a carbon adsorption system, the control efficiency, R, of the carbon adsorption system, and all supporting performance test data and calculations used to determine that value.

(5) Each owner or operator subject to the provisions of this subpart shall submit with the initial performance test an engineering report describing in detail the vent system used to vent each affected vent stream to a control device. This report shall include all valves and vent pipes that could vent

the stream to the atmosphere, thereby bypassing the control device, and identify which valves are car-sealed opened and which valves are car-sealed closed.

(b) Each owner or operator subject to the provisions of this subpart shall keep up-to-date, readily accessible continuous records of the equipment operating parameters specified to be monitored under § 61.303 (a), (c), and (d) as well as up-to-date, readily accessible records of periods of operation during which the parameter boundaries established during the most recent performance test are exceeded. The Administrator may at any time require a report of these data. Periods of operation during which the parameter boundaries established during the most recent performance tests are exceeded are defined as follows:

(1) For thermal incinerators, all loading cycles during which the average combustion temperature was more than 28 °C (50 °F) below the average loading cycle combustion temperature during the most recent performance test at which compliance with § 61.302(b) was determined.

(2) For catalytic incinerators, all loading cycles during which the average temperature of the vent stream immediately before the catalyst bed is more than 28 °C (50 °F) below the average temperature of the process vent stream during loading cycles during the most recent performance test at which compliance with § 61.302(b) was determined.

(3) All loading cycles during which the average combustion temperature was more than 28 °C (50 °F) below the average combustion temperature during the most recent performance test at which compliance with § 61.302(b) was determined for steam generating units or process heaters with a design heat input capacity of less than 44 MW (150×10^6 BTU/hr).

(4) For steam generating units or process heaters, whenever there is a change in the location at which the vent stream is introduced into the flame zone as required under § 61.302(b).

(5) For carbon adsorbers, all 3-hour periods of operation during which the average VOC concentration or reading of organics in the exhaust gases is more than 20 percent greater than the average exhaust gas concentration or reading measured by the organics monitoring device during the most recent determination of the recovery efficiency of the carbon adsorber that demonstrated that the facility was in compliance.

(c) If a vent system containing valves that could divert the emission stream away from the control device is used, each owner or operator subject to the provisions of this subpart shall keep for at least 2 years up-to-date, readily accessible continuous records of:

(1) All periods when flow is indicated if flow indicators are installed under § 61.303(g)(1).

(2) All times when maintenance is performed on car-sealed valves, when the car seal is broken, and when the valve position is changed (i.e., from open to closed for valves in the vent piping to the control device and from closed to open for valves that vent the stream directly or indirectly to the atmosphere bypassing the control device) if valves are monitored under § 60.303(g)(2).

(d) Each owner or operator of an affected facility subject to the provisions of this subpart who uses a steam generating unit or process heater with a design heat input capacity of 44 MW (150×10^6 BTU/hr) or greater to comply with § 61.302(b) shall keep an up-to-date, readily accessible record of all periods of operation of the steam generating unit or process heater. Examples of such records could include records of steam use, fuel use, or monitoring data collected pursuant to other State or Federal regulatory requirements.

(e) Each owner or operator of an affected facility subject to the provisions of this subpart shall keep up-to-date, readily accessible records of the flare pilot flame monitoring specified under § 61.303(b), as well as up-to-date, readily accessible records of any absence of the pilot flame during a loading cycle.

(f) Each owner or operator of an affected facility subject to the requirements of § 61.302 shall submit to the Administrator quarterly reports of the following information. The owner or operator shall submit the initial report within 90 days after the effective date of this subpart or 90 days after startup

for a source that has an initial startup date after the effective date.

(1) Periods of operation where there were exceedances of monitored parameters recorded under §61.305(b).

(2) All periods recorded under §61.305(c)(1) when the vent stream is diverted from the control device.

(3) All periods recorded under §61.305(d) when the steam generating unit or process heater was not operating.

(4) All periods recorded under §61.305(e) in which the pilot flame of the flare was absent.

(5) All times recorded under §61.305(c)(2) when maintenance is performed on car-sealed valves, when the car seal is broken, and when the valve position is changed.

(g) The owner or operator of an affected facility shall keep the vapor-tightness documentation required under §61.302 (d) and (e) on file at the affected facility in a permanent form available for inspection.

(h) The owner or operator of an affected facility shall update the documentation file required under §61.302 (d) and (e) for each tank truck, railcar, or marine vessel at least once per year to reflect current test results as determined by the appropriate method. The owner or operator shall include, as a minimum, the following information in this documentation:

(1) Test title;

(2) Tank truck, railcar, or marine vessel owner and address;

(3) Tank truck, railcar, or marine vessel identification number;

(4) Testing location;

(5) Date of test;

(6) Tester name and signature;

(7) Witnessing inspector: name, signature, and affiliation; and

(8) Test results, including, for railcars and tank trucks, the initial pressure up to which the tank was pressured at the start of the test.

(i) Each owner or operator of an affected facility complying with §61.300(b) or §61.300(d) shall record the following information. The first year after promulgation the owner or operator shall submit a report containing the requested information to the Director of the Emission Standards Division, (MD–13), U.S. Environmental Protection Agency, Research Triangle Park, North Carolina 27711. After the first year, the owner or operator shall continue to record; however, no reporting is required. The information shall be made available if requested. The information shall include, as a minimum:

(1) The affected facility's name and address;

(2) The weight percent of the benzene loaded;

(3) The type of vessel loaded (i.e., tank truck, railcar, or marine vessel); and

(4) The annual amount of benzene loaded into each type of vessel.

[55 FR 8341, Mar. 7, 1990, as amended at 65 FR 62159, Oct. 17, 2000]

§61.306 Delegation of authority.

(a) In delegating implementation and enforcement authority to a State under section 112(d) of the Act, the authorities contained in paragraph (b) of this section shall be retained by the Administrator and not transferred to a State.

(b) Authorities which will not be delegated to States: No restrictions.

Subparts CC–EE [Reserved]

Subpart FF—National Emission Standard for Benzene Waste Operations

SOURCE: 55 FR 8346, Mar. 7, 1990, unless otherwise noted.

§61.340 Applicability.

(a) The provisions of this subpart apply to owners and operators of chemical manufacturing plants, coke by-product recovery plants, and petroleum refineries.

(b) The provisions of this subpart apply to owners and operators of hazardous waste treatment, storage, and disposal facilities that treat, store, or dispose of hazardous waste generated by any facility listed in paragraph (a) of this section. The waste streams at hazardous waste treatment, storage, and disposal facilities subject to the provisions of this subpart are the benzene-containing hazardous waste from any facility listed in paragraph (a) of

this section. A hazardous waste treatment, storage, and disposal facility is a facility that must obtain a hazardous waste management permit under subtitle C of the Solid Waste Disposal Act.

(c) At each facility identified in paragraph (a) or (b) of this section, the following waste is exempt from the requirements of this subpart:

(1) Waste in the form of gases or vapors that is emitted from process fluids:

(2) Waste that is contained in a segregated stormwater sewer system.

(d) At each facility identified in paragraph (a) or (b) of this section, any gaseous stream from a waste management unit, treatment process, or wastewater treatment system routed to a fuel gas system, as defined in §61.341, is exempt from this subpart. No testing, monitoring, recordkeeping, or reporting is required under this subpart for any gaseous stream from a waste management unit, treatment process, or wastewater treatment unit routed to a fuel gas system.

[55 FR 8346, Mar. 7, 1990, as amended at 55 FR 37231, Sept. 10, 1990; 58 FR 3095, Jan. 7, 1993; 67 FR 68531, Nov. 12, 2002]

§ 61.341 Definitions.

Benzene concentration means the fraction by weight of benzene in a waste as determined in accordance with the procedures specified in §61.355 of this subpart.

Car-seal means a seal that is placed on a device that is used to change the position of a valve (e.g., from opened to closed) in such a way that the position of the valve cannot be changed without breaking the seal.

Chemical manufacturing plant means any facility engaged in the production of chemicals by chemical, thermal, physical, or biological processes for use as a product, co-product, by-product, or intermediate including but not limited to industrial organic chemicals, organic pesticide products, pharmaceutical preparations, paint and allied products, fertilizers, and agricultural chemicals. Examples of chemical manufacturing plants include facilities at which process units are operated to produce one or more of the following chemicals: benzenesulfonic acid, benzene, chlorobenzene, cumene, cyclohexane, ethylene, ethylbenzene, hydroquinone, linear alklylbenzene, nitrobenzene, resorcinol, sulfolane, or styrene.

Closed-vent system means a system that is not open to the atmosphere and is composed of piping, ductwork, connections, and, if necessary, flow inducing devices that transport gas or vapor from an emission source to a control device.

Coke by-product recovery plant means any facility designed and operated for the separation and recovery of coal tar derivatives (by-products) evolved from coal during the coking process of a coke oven battery.

Container means any portable waste management unit in which a material is stored, transported, treated, or otherwise handled. Examples of containers are drums, barrels, tank trucks, barges, dumpsters, tank cars, dump trucks, and ships.

Control device means an enclosed combustion device, vapor recovery system, or flare.

Cover means a device or system which is placed on or over a waste placed in a waste management unit so that the entire waste surface area is enclosed and sealed to minimize air emissions. A cover may have openings necessary for operation, inspection, and maintenance of the waste management unit such as access hatches, sampling ports, and gauge wells provided that each opening is closed and sealed when not in use. Example of covers include a fixed roof installed on a tank, a lid installed on a container, and an air-supported enclosure installed over a waste management unit.

External floating roof means a pontoon-type or double-deck type cover with certain rim sealing mechanisms that rests on the liquid surface in a waste management unit with no fixed roof.

Facility means all process units and product tanks that generate waste within a stationary source, and all waste management units that are used for waste treatment, storage, or disposal within a stationary source.

Fixed roof means a cover that is mounted on a waste management unit in a stationary manner and that does

not move with fluctuations in liquid level.

Floating roof means a cover with certain rim sealing mechanisms consisting of a double deck, pontoon single deck, internal floating cover or covered floating roof, which rests upon and is supported by the liquid being contained, and is equipped with a closure seal or seals to close the space between the roof edge and unit wall.

Flow indicator means a device which indicates whether gas flow is present in a line or vent system.

Fuel gas system means the offsite and onsite piping and control system that gathers gaseous streams generated by facility operations, may blend them with sources of gas, if available, and transports the blended gaseous fuel at suitable pressures for use as fuel in heaters, furnaces, boilers, incinerators, gas turbines, and other combustion devices located within or outside the facility. The fuel is piped directly to each individual combustion device, and the system typically operates at pressures over atmospheric.

Individual drain system means the system used to convey waste from a process unit, product storage tank, or waste management unit to a waste management unit. The term includes all process drains and common junction boxes, together with their associated sewer lines and other junction boxes, down to the receiving waste management unit.

Internal floating roof means a cover that rests or floats on the liquid surface inside a waste management unit that has a fixed roof.

Liquid-mounted seal means a foam or liquid-filled primary seal mounted in contact with the liquid between the waste management unit wall and the floating roof continuously around the circumference.

Loading means the introduction of waste into a waste management unit but not necessarily to complete capacity (also referred to as filling).

Maximum organic vapor pressure means the equilibrium partial pressure exerted by the waste at the temperature equal to the highest calendar-month average of the waste storage temperature for waste stored above or below the ambient temperature or at the local maximum monthly average temperature as reported by the National Weather Service for waste stored at the ambient temperature, as determined:

(1) In accordance with §60.17(c); or

(2) As obtained from standard reference texts; or

(3) In accordance with §60.17(a)(37); or

(4) Any other method approved by the Administrator.

No detectable emissions means less than 500 parts per million by volume (ppmv) above background levels, as measured by a detection instrument reading in accordance with the procedures specified in §61.355(h) of this subpart.

Oil-water separator means a waste management unit, generally a tank or surface impoundment, used to separate oil from water. An oil-water separator consists of not only the separation unit but also the forebay and other separator basins, skimmers, weirs, grit chambers, sludge hoppers, and bar screens that are located directly after the individual drain system and prior to additional treatment units such as an air flotation unit, clarifier, or biological treatment unit. Examples of an oil-water separator incude an API separator, parallel-plate interceptor, and corrugated-plate interceptor with the associated ancillary equipment.

Petroleum refinery means any facility engaged in producing gasoline, kerosene, distillate fuel oils, residual fuel oils, lubricants, or other products through the distillation of petroleum, or through the redistillation, cracking, or reforming of unfinished petroleum derivatives.

Petroleum means the crude oil removed from the earth and the oils derived from tar sands, shale, and coal.

Point of waste generation means the location where the waste stream exits the process unit component or storage tank prior to handling or treatment in an operation that is not an integral part of the production process, or in the case of waste management units that generate new wastes after treatment, the location where the waste stream exits the waste management unit component.

Process unit means equipment assembled and connected by pipes or ducts to

produce intermediate or final products. A process unit can be operated independently if supplied with sufficient fuel or raw materials and sufficient product storage facilities.

Process unit turnaround means the shutting down of the operations of a process unit, the purging of the contents of the process unit, the maintenance or repair work, followed by restarting of the process.

Process unit turnaround waste means a waste that is generated as a result of a process unit turnaround.

Process wastewater means water which comes in contact with benzene during manufacturing or processing operations conducted within a process unit. Process wastewater is not organic wastes, process fluids, product tank drawdown, cooling tower blowdown, steam trap condensate, or landfill leachate.

Process wastewater stream means a waste stream that contains only process wastewater.

Product tank means a stationary unit that is designed to contain an accumulation of materials that are fed to or produced by a process unit, and is constructed primarily of non-earthen materials (e.g., wood, concrete, steel, plastic) which provide structural support.

Product tank drawdown means any material or mixture of materials discharged from a product tank for the purpose of removing water or other contaminants from the product tank.

Safety device means a closure device such as a pressure relief valve, frangible disc, fusible plug, or any other type of device which functions exclusively to prevent physical damage or permanent deformation to a unit or its air emission control equipment by venting gases or vapors directly to the atmosphere during unsafe conditions resulting from an unplanned, accidental, or emergency event. For the purpose of this subpart, a safety device is not used for routine venting of gases or vapors from the vapor headspace underneath a cover such as during filling of the unit or to adjust the pressure in this vapor headspace in response to normal daily diurnal ambient temperature fluctuations. A safety device is designed to remain in a closed position during normal operations and open only when the internal pressure, or another relevant parameter, exceeds the device threshold setting applicable to the air emission control equipment as determined by the owner or operator based on manufacturer recommendations, applicable regulations, fire protection and prevention codes, standard engineering codes and practices, or other requirements for the safe handling of flammable, ignitable, explosive, reactive, or hazardous materials.

Segregated stormwater sewer system means a drain and collection system designed and operated for the sole purpose of collecting rainfall runoff at a facility, and which is segregated from all other individual drain systems.

Sewer line means a lateral, trunk line, branch line, or other enclosed conduit used to convey waste to a downstream waste management unit.

Slop oil means the floating oil and solids that accumulate on the surface of an oil-water separator.

Sour water stream means a stream that:

(1) Contains ammonia or sulfur compounds (usually hydrogen sulfide) at concentrations of 10 ppm by weight or more;

(2) Is generated from separation of water from a feed stock, intermediate, or product that contained ammonia or sulfur compounds; and

(3) Requires treatment to remove the ammonia or sulfur compounds.

Sour water stripper means a unit that:

(1) Is designed and operated to remove ammonia or sulfur compounds (usually hydrogen sulfide) from sour water streams;

(2) Has the sour water streams transferred to the stripper through hard piping or other enclosed system; and

(3) Is operated in such a manner that the offgases are sent to a sulfur recovery unit, processing unit, incinerator, flare, or other combustion device.

Surface impoundment means a waste management unit which is a natural topographic depression, man-made excavation, or diked area formed primarily of earthen materials (although it may be lined with man-made materials), which is designed to hold an accumulation of liquid wastes or waste containing free liquids, and which is

not an injection well. Examples of surface impoundments are holding, storage, settling, and aeration pits, ponds, and lagoons.

Tank means a stationary waste management unit that is designed to contain an accumulation of waste and is constructed primarily of nonearthen materials (e.g., wood, concrete, steel, plastic) which provide structural support.

Treatment process means a stream stripping unit, thin-film evaporation unit, waste incinerator, or any other process used to comply with §61.348 of this subpart.

Vapor-mounted seal means a foam-filled primary seal mounted continuously around the perimeter of a waste management unit so there is an annular vapor space underneath the seal. The annular vapor space is bounded by the bottom of the primary seal, the unit wall, the liquid surface, and the floating roof.

Waste means any material resulting from industrial, commercial, mining or agricultural operations, or from community activities that is discarded or is being accumulated, stored, or physically, chemically, thermally, or biologically treated prior to being discarded, recycled, or discharged.

Waste management unit means a piece of equipment, structure, or transport mechanism used in handling, storage, treatment, or disposal of waste. Examples of a waste management unit include a tank, surface impoundment, container, oil-water separator, individual drain system, steam stripping unit, thin-film evaporation unit, waste incinerator, and landfill.

Waste stream means the waste generated by a particular process unit, product tank, or waste management unit. The characteristics of the waste stream (e.g., flow rate, benzene concentration, water content) are determined at the point of waste generation. Examples of a waste stream include process wastewater, product tank drawdown, sludge and slop oil removed from waste management units, and landfill leachate.

Wastewater treatment system means any component, piece of equipment, or installation that receives, manages, or treats process wastewater, product tank drawdown, or landfill leachate prior to direct or indirect discharge in accordance with the National Pollutant Discharge Elimination System permit regulations under 40 CFR part 122. These systems typically include individual drain systems, oil-water separators, air flotation units, equalization tanks, and biological treatment units.

Water seal controls means a seal pot, p-leg trap, or other type of trap filled with water (e.g., flooded sewers that maintain water levels adequate to prevent air flow through the system) that creates a water barrier between the sewer line and the atmosphere. The water level of the seal must be maintained in the vertical leg of a drain in order to be considered a water seal.

[55 FR 8346, Mar. 7, 1990; 55 FR 12444, Apr. 3, 1990, as amended at 58 FR 3095, Jan. 7, 1993; 67 FR 68531, Nov. 12, 2002]

§61.342 Standards: General.

(a) An owner or operator of a facility at which the total annual benzene quantity from facility waste is less than 10 megagrams per year (Mg/yr) (11 ton/yr) shall be exempt from the requirements of paragraphs (b) and (c) of this section. The total annual benzene quantity from facility waste is the sum of the annual benzene quantity for each waste stream at the facility that has a flow-weighted annual average water content greater than 10 percent or that is mixed with water, or other wastes, at any time and the mixture has an annual average water content greater than 10 percent. The benzene quantity in a waste stream is to be counted only once without multiple counting if other waste streams are mixed with or generated from the original waste stream. Other specific requirements for calculating the total annual benzene waste quantity are as follows:

(1) Wastes that are exempted from control under §§61.342(c)(2) and 61.342(c)(3) are included in the calculation of the total annual benzene quantity if they have an annual average water content greater than 10 percent, or if they are mixed with water or other wastes at any time and the mixture has an annual average water content greater than 10 percent.

(2) The benzene in a material subject to this subpart that is sold is included in the calculation of the total annual benzene quantity if the material has an annual average water content greater than 10 percent.

(3) Benzene in wastes generated by remediation activities conducted at the facility, such as the excavation of contaminated soil, pumping and treatment of groundwater, and the recovery of product from soil or groundwater, are not included in the calculation of total annual benzene quantity for that facility. If the facility's total annual benzene quantity is 10 Mg/yr (11 ton/yr) or more, wastes generated by remediation activities are subject to the requirements of paragraphs (c) through (h) of this section. If the facility is managing remediation waste generated offsite, the benzene in this waste shall be included in the calculation of total annual benzene quantity in facility waste, if the waste streams have an annual average water content greater than 10 percent, or if they are mixed with water or other wastes at any time and the mixture has an annual average water content greater than 10 percent.

(4) The total annual benzene quantity is determined based upon the quantity of benzene in the waste before any waste treatment occurs to remove the benzene except as specified in § 61.355(c)(1)(i) (A) through (C).

(b) Each owner or operator of a facility at which the total annual benzene quantity from facility waste is equal to or greater than 10 Mg/yr (11 ton/yr) as determined in paragraph (a) of this section shall be in compliance with the requirements of paragraphs (c) through (h) of this section no later than 90 days following the effective date, unless a waiver of compliance has been obtained under § 61.11, or by the initial startup for a new source with an initial startup after the effective date.

(1) The owner or operator of an existing source unable to comply with the rule within the required time may request a waiver of compliance under § 61.10.

(2) As part of the waiver application, the owner or operator shall submit to the Administrator a plan under § 61.10(b)(3) that is an enforceable commitment to obtain environmental benefits to mitigate the benzene emissions that result from extending the compliance date. The plan shall include the following information:

(i) A description of the method of compliance, including the control approach, schedule for installing controls, and quantity of the benzene emissions that result from extending the compliance date;

(ii) If the control approach involves a compliance strategy designed to obtain integrated compliance with multiple regulatory requirements, a description of the other regulations involved and their effective dates; and

(iii) A description of the actions to be taken at the facility to obtain mitigating environmental benefits, including how the benefits will be obtained, the schedule for these actions, and an estimate of the quantifiable benefits that directly result from these actions.

(c) Each owner or operator of a facility at which the total annual benzene quantity from facility waste is equal to or greater than 10 Mg/yr (11 ton/yr) as determined in paragraph (a) of this section shall manage and treat the facility waste as follows:

(1) For each waste stream that contains benzene, including (but not limited to) organic waste streams that contain less than 10 percent water and aqueous waste streams, even if the wastes are not discharged to an individual drain system, the owner or operator shall:

(i) Remove or destroy the benzene contained in the waste using a treatment process or wastewater treatment system that complies with the standards specified in § 61.348 of this subpart.

(ii) Comply with the standards specified in §§ 61.343 through 61.347 of this subpart for each waste management unit that receives or manages the waste stream prior to and during treatment of the waste stream in accordance with paragraph (c)(1)(i) of this section.

(iii) Each waste management unit used to manage or treat waste streams that will be recycled to a process shall comply with the standards specified in §§ 61.343 through 61.347. Once the waste stream is recycled to a process, including to a tank used for the storage of production process feed, product, or

product intermediates, unless this tank is used primarily for the storage of wastes, the material is no longer subject to paragraph (c) of this section.

(2) A waste stream is exempt from paragraph (c)(1) of this section provided that the owner or operator demonstrates initially and, thereafter, at least once per year that the flow-weighted annual average benzene concentration for the waste stream is less than 10 ppmw as determined by the procedures specified in §61.355(c)(2) or §61.355(c)(3).

(3) A waste stream is exempt from paragraph (c)(1) of this section provided that the owner or operator demonstrates initially and, thereafter, at least once per year that the conditions specified in either paragraph (c)(3)(i) or (c)(3)(ii) of this section are met.

(i) The waste stream is process wastewater that has a flow rate less than 0.02 liters per minute (0.005 gallons per minute) or an annual wastewater quantity of less than 10 Mg/yr (11 ton/yr); or

(ii) All of the following conditions are met:

(A) The owner or operator does not choose to exempt process wastewater under paragraph (c)(3)(i) of this section,

(B) The total annual benzene quantity in all waste streams chosen for exemption in paragraph (c)(3)(ii) of this section does not exceed 2.0 Mg/yr (2.2 ton/yr) as determined in the procedures in §61.355(j), and

(C) The total annual benzene quantity in a waste stream chosen for exemption, including process unit turnaround waste, is determined for the year in which the waste is generated.

(d) As an alternative to the requirements specified in paragraphs (c) and (e) of this section, an owner or operator of a facility at which the total annual benzene quantity from facility waste is equal to or greater than 10 Mg/yr (11 ton/yr) as determined in paragraph (a) of this section may elect to manage and treat the facility waste as follows:

(1) The owner or operator shall manage and treat facility waste other than process wastewater in accordance with the requirements of paragraph (c)(1) of this section.

(2) The owner or operator shall manage and treat process wastewater in accordance with the following requirements:

(i) Process wastewater shall be treated to achieve a total annual benzene quantity from facility process wastewater less than 1 Mg/yr (1.1 ton/yr). Total annual benzene from facility process wastewater shall be determined by adding together the annual benzene quantity at the point of waste generation for each untreated process wastewater stream plus the annual benzene quantity exiting the treatment process for each process wastewater stream treated in accordance with the requirements of paragraph (c)(1)(i) of this section.

(ii) Each treated process wastewater stream identified in paragraph (d)(2)(i) of this section shall be managed and treated in accordance with paragraph (c)(1) of this section.

(iii) Each untreated process wastewater stream identified in paragraph (d)(2)(i) of this section is exempt from the requirements of paragraph (c)(1) of this section.

(e) As an alternative to the requirements specified in paragraphs (c) and (d) of this section, an owner or operator of a facility at which the total annual benzene quantity from facility waste is equal to or greater than 10 Mg/yr (11 ton/yr) as determined in paragraph (a) of this section may elect to manage and treat the facility waste as follows:

(1) The owner or operator shall manage and treat facility waste with a flow-weighted annual average water content of less than 10 percent in accordance with the requirements of paragraph (c)(1) of this section; and

(2) The owner or operator shall manage and treat facility waste (including remediation and process unit turnaround waste) with a flow-weighted annual average water content of 10 percent or greater, on a volume basis as total water, and each waste stream that is mixed with water or wastes at any time such that the resulting mixture has an annual water content greater than 10 percent, in accordance with the following:

(i) The benzene quantity for the wastes described in paragraph (e)(2) of

this section must be equal to or less than 6.0 Mg/yr (6.6 ton/yr), as determined in § 61.355(k). Wastes as described in paragraph (e)(2) of this section that are transferred offsite shall be included in the determination of benzene quantity as provided in § 61.355(k). The provisions of paragraph (f) of this section shall not apply to any owner or operator who elects to comply with the provisions of paragraph (e) of this section.

(ii) The determination of benzene quantity for each waste stream defined in paragraph (e)(2) of this section shall be made in accordance with § 61.355(k).

(f) Rather than treating the waste onsite, an owner or operator may elect to comply with paragraph (c)(1)(i) of this section by transferring the waste offsite to another facility where the waste is treated in accordance with the requirements of paragraph (c)(1)(i) of this section. The owner or operator transferring the waste shall:

(1) Comply with the standards specified in §§ 61.343 through 61.347 of this subpart for each waste management unit that receives or manages the waste prior to shipment of the waste offsite.

(2) Include with each offsite waste shipment a notice stating that the waste contains benzene which is required to be managed and treated in accordance with the provisions of this subpart.

(g) Compliance with this subpart will be determined by review of facility records and results from tests and inspections using methods and procedures specified in § 61.355 of this subpart.

(h) Permission to use an alternative means of compliance to meet the requirements of §§ 61.342 through 61.352 of this subpart may be granted by the Administrator as provided in § 61.353 of this subpart.

[55 FR 8346, Mar. 7, 1990, as amended at 58 FR 3095, Jan. 7, 1993; 65 FR 62159, 62160, Oct. 17, 2000]

§ 61.343 Standards: Tanks.

(a) Except as provided in paragraph (b) of this section and in § 61.351, the owner or operator must meet the standards in paragraph (a)(1) or (2) of this section for each tank in which the waste stream is placed in accordance with § 61.342 (c)(1)(ii). The standards in this section apply to the treatment and storage of the waste stream in a tank, including dewatering.

(1) The owner or operator shall install, operate, and maintain a fixed-roof and closed-vent system that routes all organic vapors vented from the tank to a control device.

(i) The fixed-roof shall meet the following requirements:

(A) The cover and all openings (e.g., access hatches, sampling ports, and gauge wells) shall be designed to operate with no detectable emissions as indicated by an instrument reading of less than 500 ppmv above background, as determined initially and thereafter at least once per year by the methods specified in § 61.355(h) of this subpart.

(B) Each opening shall be maintained in a closed, sealed position (e.g., covered by a lid that is gasketed and latched) at all times that waste is in the tank except when it is necessary to use the opening for waste sampling or removal, or for equipment inspection, maintenance, or repair.

(C) If the cover and closed-vent system operate such that the tank is maintained at a pressure less than atmospheric pressure, then paragraph (a)(1)(i)(B) of this section does not apply to any opening that meets all of thefollowing conditions:

(*1*) The purpose of the opening is to provide dilution air to reduce the explosion hazard;

(*2*) The opening is designed to operate with no detectable emissions as indicated by an instrument reading of less than 500 ppmv above background, as determined initially and thereafter at least once per year by the methods specified in § 61.355(h); and

(*3*) The pressure is monitored continuously to ensure that the pressure in the tank remains below atmospheric pressure.

(ii) The closed-vent system and control device shall be designed and operated in accordance with the requirements of § 61.349 of this subpart.

(2) The owner or operator must install, operate, and maintain an enclosure and closed-vent system that routes all organic vapors vented from the tank, located inside the enclosure,

to an enclosed combustion control device in accordance with the requirements specified in paragraph (e) of this section.

(b) For a tank that meets all the conditions specified in paragraph (b)(1) of this section, the owner or operator may elect to comply with paragraph (b)(2) of this section as an alternative to the requirements specified in paragraph (a)(1) of this section.

(1) The waste managed in the tank complying with paragraph (b)(2) of this section shall meet all of the following conditions:

(i) Each waste stream managed in the tank must have a flow-weighted annual average water content less than or equal to 10 percent water, on a volume basis as total water.

(ii) The waste managed in the tank either:

(A) Has a maximum organic vapor pressure less than 5.2 kilopascals (kPa) (0.75 pounds per square inch (psi));

(B) Has a maximum organic vapor pressure less than 27.6 kPa (4.0 psi) and is managed in a tank having design capacity less than 151 m^3 (40,000 gal); or

(C) Has a maximum organic vapor pressure less than 76.6 kPa (11.1 psi) and is managed in a tank having a design capacity less than 75 m^3 (20,000 gal).

(2) The owner or operator shall install, operate, and maintain a fixed roof as specified in paragraph (a)(1)(i).

(3) For each tank complying with paragraph (b) of this section, one or more devices which vent directly to the atmosphere may be used on the tank provided each device remains in a closed, sealed position during normal operations except when the device needs to open to prevent physical damage or permanent deformation of the tank or cover resulting from filling or emptying the tank, diurnal temperature changes, atmospheric pressure changes or malfunction of the unit in accordance with good engineering and safety practices for handling flammable, explosive, or other hazardous materials.

(c) Each fixed-roof, seal, access door, and all other openings shall be checked by visual inspection initially and quarterly thereafter to ensure that no cracks or gaps occur and that access doors and other openings are closed and gasketed properly.

(d) Except as provided in §61.350 of this subpart, when a broken seal or gasket or other problem is identified, or when detectable emissions are measured, first efforts at repair shall be made as soon as practicable, but not later than 45 calendar days after identification.

(e)(1) The tank must be located inside a total enclosure. The enclosure must be designed and operated in accordance with the criteria for a permanent total enclosure as specified in ''Procedure T—Criteria for and Verification of a Permanent or Temporary Total Enclosure'' in 40 CFR 52.741, appendix B. The enclosure may have permanent or temporary openings to allow worker access; passage of material into or out of the enclosure by conveyor, vehicles, or other mechanical means; entry of permanent mechanical or electrical equipment; or direct airflow into the enclosure. The owner or operator must perform the verification procedure for the enclosure as specified in section 5.0 of Procedure T initially when the enclosure is first installed and, thereafter, annually. A facility that has conducted an initial compliance demonstration and that performs annual compliance demonstrations in accordance with the requirements for Tank Level 2 control requirements 40 CFR 264.1084(i) or 40 CFR 265(i) is not required to make repeat demonstrations of initial and continuous compliance for the purposes of this subpart.

(2) [Reserved]

(3) Safety devices, as defined in this subpart, may be installed and operated as necessary on any enclosure, closed-vent system, or control device used to comply with the requirements of paragraphs (e)(1) and (2) of this section.

(4) The closed-vent system must be designed and operated in accordance with the requirements of §61.349.

[55 FR 8346, Mar. 7, 1990, as amended at 55 FR 18331, May 2, 1990; 58 FR 3096, Jan. 7, 1993; 67 FR 68532, Nov. 12, 2002; 68 FR 6082, Feb. 6, 2003]

§ 61.344 Standards: Surface impoundments.

(a) The owner or operator shall meet the following standards for each surface impoundment in which waste is placed in accordance with § 61.342(c)(1)(ii) of this subpart:

(1) The owner or operator shall install, operate, and maintain on each surface impoundment a cover (e.g., air-supported structure or rigid cover) and closed-vent system that routes all organic vapors vented from the surface impoundment to a control device.

(i) The cover shall meet the following requirements:

(A) The cover and all openings (e.g., access hatches, sampling ports, and gauge wells) shall be designed to operate with no detectable emissions as indicated by an instrument reading of less than 500 ppmv above background, initially and thereafter at least once per year by the methods specified in § 61.355(h) of this subpart.

(B) Each opening shall be maintained in a closed, sealed position (e.g., covered by a lid that is gasketed and latched) at all times that waste is in the surface impoundment except when it is necessary to use the opening for waste sampling or removal, or for equipment inspection, maintenance, or repair.

(C) If the cover and closed-vent system operate such that the enclosure of the surface impoundment is maintained at a pressure less than atmospheric pressure, then paragraph (a)(1)(i)(B) of this section does not apply to any opening that meets all of the following conditions:

(*1*) The purpose of the opening is to provide dilution air to reduce the explosion hazard;

(*2*) The opening is designed to operate with no detectable emissions as indicated by an instrument reading of less than 500 ppmv above background, as determined initially and thereafter at least once per year by the methods specified in § 61.355(h) of this subpart; and

(*3*) The pressure is monitored continuously to ensure that the pressure in the enclosure of the surface impoundment remains below atmospheric pressure.

(D) The cover shall be used at all times that waste is placed in the surface impoundment except during removal of treatment residuals in accordance with 40 CFR 268.4 or closure of the surface impoundment in accordance with 40 CFR 264.228. (Note: the treatment residuals generated by these activities may be subject to the requirements of this part.)

(ii) The closed-vent system and control device shall be designed and operated in accordance with § 61.349 of this subpart.

(b) Each cover seal, access hatch, and all other openings shall be checked by visual inspection initially and quarterly thereafter to ensure that no cracks or gaps occur and that access hatches and other openings are closed and gasketed properly.

(c) Except as provided in § 61.350 of this subpart, when a broken seal or gasket or other problem is identified, or when detectable emissions are measured, first efforts at repair shall be made as soon as practicable, but not later than 15 calendar days after identification.

[55 FR 8346, Mar. 7, 1990, as amended at 58 FR 3097, Jan. 7, 1993]

§ 61.345 Standards: Containers.

(a) The owner or operator shall meet the following standards for each container in which waste is placed in accordance with § 61.342(c)(1)(ii) of this subpart:

(1) The owner or operator shall install, operate, and maintain a cover on each container used to handle, transfer, or store waste in accordance with the following requirements:

(i) The cover and all openings (e.g., bungs, hatches, and sampling ports) shall be designed to operate with no detectable emissions as indicated by an instrument reading of less than 500 ppmv above background, initially and thereafter at least once per year by the methods specified in § 61.355(h) of this subpart.

(ii) Except as provided in paragraph (a)(4) of this section, each opening shall be maintained in a closed, sealed position (e.g., covered by a lid that is gasketed and latched) at all times that waste is in the container except when it is necessary to use the opening for

waste loading, removal, inspection, or sampling.

(2) When a waste is transferred into a container by pumping, the owner or operator shall perform the transfer using a submerged fill pipe. The submerged fill pipe outlet shall extend to within two fill pipe diameters of the bottom of the container while the container is being loaded. During loading of the waste, the cover shall remain in place and all openings shall be maintained in a closed, sealed position except for those openings required for the submerged fill pipe, those openings required for venting of the container to prevent physical damage or permanent deformation of the container or cover, and any openings complying with paragraph (a)(4) of this section.

(3) Treatment of a waste in a container, including aeration, thermal or other treatment, must be performed by the owner or operator in a manner such that while the waste is being treated the container meets the standards specified in paragraphs (a)(3)(i) through (iii) of this section, except for covers and closed-vent systems that meet the requirements in paragraph (a)(4) of this section.

(i) The owner or operator must either:

(A) Vent the container inside a total enclosure which is exhausted through a closed-vent system to a control device in accordance with the requirements of paragraphs (a)(3)(ii)(A) and (B) of this section; or

(B) Vent the covered or closed container directly through a closed-vent system to a control device in accordance with the requirements of paragraphs (a)(3)(ii)(B) and (C) of this section.

(ii) The owner or operator must meet the following requirements, as applicable to the type of air emission control equipment selected by the owner or operator:

(A) The total enclosure must be designed and operated in accordance with the criteria for a permanent total enclosure as specified in section 5 of the ''Procedure T—Criteria for and Verification of a Permanent or Temporary Total Enclosure'' in 40 CFR 52.741, appendix B. The enclosure may have permanent or temporary openings to allow worker access; passage of containers through the enclosure by conveyor or other mechanical means; entry of permanent mechanical or electrical equipment; or direct airflow into the enclosure. The owner or operator must perform the verification procedure for the enclosure as specified in section 5.0 of ''Procedure T—Criteria for and Verification of a Permanent or Temporary Total Enclosure'' initially when the enclosure is first installed and, thereafter, annually. A facility that has conducted an initial compliance demonstration and that performs annual compliance demonstrations in accordance with the Container Level 3 control requirements in 40 CFR 264.1086(e)(2)(i) or 40 CFR 265.1086(e)(2)(i) is not required to make repeat demonstrations of initial and continuous compliance for the purposes of this subpart.

(B) The closed-vent system and control device must be designed and operated in accordance with the requirements of §61.349.

(C) For a container cover, the cover and all openings (*e.g.*, doors, hatches) must be designed to operate with no detectable emissions as indicated by an instrument reading of less than 500 ppmv above background, initially and thereafter at least once per year by the methods specified in §61.355(h).

(iii) Safety devices, as defined in this subpart, may be installed and operated as necessary on any container, enclosure, closed-vent system, or control device used to comply with the requirements of paragraph (e)(1) of this section.

(4) If the cover and closed-vent system operate such that the container is maintained at a pressure less than atmospheric pressure, the owner or operator may operate the system with an opening that is not sealed and kept closed at all times if the following conditions are met:

(i) The purpose of the opening is to provide dilution air to reduce the explosion hazard;

(ii) The opening is designed to operate with no detectable emissions as indicated by an instrument reading of less than 500 ppmv above background, as determined initially and thereafter

at least once per year by methods specified in § 61.355(h); and

(iii) The pressure is monitored continuously to ensure that the pressure in the container remains below atmospheric pressure.

(b) Each cover and all openings shall be visually inspected initially and quarterly thereafter to ensure that they are closed and gasketed properly.

(c) Except as provided in § 61.350 of this subpart, when a broken seal or gasket or other problem is identified, first efforts at repair shall be made as soon as practicable, but not later than 15 calendar days after identification.

[55 FR 8346, Mar. 7, 1990, as amended at 58 FR 3097, Jan. 7, 1993; 67 FR 68532, Nov. 12, 2002]

§ 61.346 Standards: Individual drain systems.

(a) Except as provided in paragraph (b) of this section, the owner or operator shall meet the following standards for each individual drain system in which waste is placed in accordance with § 61.342(c)(1)(ii) of this subpart:

(1) The owner or operator shall install, operate, and maintain on each drain system opening a cover and closed-vent system that routes all organic vapors vented from the drain system to a control device.

(i) The cover shall meet the following requirements:

(A) The cover and all openings (e.g., access hatches, sampling ports) shall be designed to operate with no detactable emissions as indicated by an instrument reading of less than 500 ppmv above background, initially and thereafter at least once per year by the methods specified in § 61.355(h) of this subpart.

(B) Each opening shall be maintained in a closed, sealed position (e.g., covered by a lid that is gasketed and latched) at all times that waste is in the drain system except when it is necessary to use the opening for waste sampling or removal, or for equipment inspection, maintenance, or repair.

(C) If the cover and closed-vent system operate such that the individual drain system is maintained at a pressure less than atmospheric pressure, then paragraph (a)(1)(i)(B) of this section does not apply to any opening that meets all of the following conditions:

(*1*) The purpose of the opening is to provide dilution air to reduce the explosion hazard;

(*2*) The opening is designed to operate with no detectable emissions as indicated by an instrument reading of less than 500 ppmv above background, as determined initially and thereafter at least once per year by the methods specified in § 61.355(h); and

(*3*) The pressure is monitored continuously to ensure that the pressure in the individual drain system remains below atmospheric pressure.

(ii) The closed-vent system and control device shall be designed and operated in accordance with § 61.349 of this subpart.

(2) Each cover seal, access hatch, and all other openings shall be checked by visual inspection initially and quarterly thereafter to ensure that no cracks or gaps occur and that access hatches and other openings are closed and gasketed properly.

(3) Except as provided in § 61.350 of this subpart, when a broken seal or gasket or other problem is identified, or when detectable emissions are measured, first efforts at repair shall be made as soon as practicable, but not later than 15 calendar days after identification.

(b) As an alternative to complying with paragraph (a) of this section, an owner or operator may elect to comply with the following requirements:

(1) Each drain shall be equipped with water seal controls or a tightly sealed cap or plug.

(2) Each junction box shall be equipped with a cover and may have a vent pipe. The vent pipe shall be at least 90 cm (3 ft) in length and shall not exceed 10.2 cm (4 in) in diameter.

(i) Junction box covers shall have a tight seal around the edge and shall be kept in place at all times, except during inspection and maintenance.

(ii) One of the following methods shall be used to control emissions from the junction box vent pipe to the atmosphere:

(A) Equip the junction box with a system to prevent the flow of organic vapors from the junction box vent pipe to the atmosphere during normal operation. An example of such a system includes use of water seal controls on the

junction box. A flow indicator shall be installed, operated, and maintained on each junction box vent pipe to ensure that organic vapors are not vented from the junction box to the atmosphere during normal operation.

(B) Connect the junction box vent pipe to a closed-vent system and control device in accordance with §61.349 of this subpart.

(3) Each sewer line shall not be open to the atmosphere and shall be covered or enclosed in a manner so as to have no visual gaps or cracks in joints, seals, or other emission interfaces.

(4) Equipment installed in accordance with paragraphs (b)(1), (b)(2), or (b)(3) of this section shall be inspected as follows:

(i) Each drain using water seal controls shall be checked by visual or physical inspection initially and thereafter quarterly for indications of low water levels or other conditions that would reduce the effectiveness of water seal controls.

(ii) Each drain using a tightly sealed cap or plug shall be visually inspected initially and thereafter quarterly to ensure caps or plugs are in place and properly installed.

(iii) Each junction box shall be visually inspected initially and thereafter quarterly to ensure that the cover is in place and to ensure that the cover has a tight seal around the edge.

(iv) The unburied portion of each sewer line shall be visually inspected initially and thereafter quarterly for indication of cracks, gaps, or other problems that could result in benzene emissions.

(5) Except as provided in §61.350 of this subpart, when a broken seal, gap, crack or other problem is identified, first efforts at repair shall be made as soon as practicable, but not later than 15 calendar days after identification.

[55 FR 8346, Mar. 7, 1990, as amended at 55 FR 37231, Sept. 10, 1990; 58 FR 3097, Jan. 7, 1993]

§61.347 Standards: Oil-water separators.

(a) Except as provided in §61.352 of this subpart, the owner or operator shall meet the following standards for each oil-water separator in which waste is placed in accordance with §61.342(c)(1)(ii) of this subpart:

(1) The owner or operator shall install, operate, and maintain a fixed-roof and closed-vent system that routes all organic vapors vented from the oil-water separator to a control device.

(i) The fixed-roof shall meet the following requirements:

(A) The cover and all openings (e.g., access hatches, sampling ports, and gauge wells) shall be designed to operate with no detectable emissions as indicated by an instrument reading of less than 500 ppmv above background, as determined initially and thereafter at least once per year by the methods specified in §61.355(h) of this subpart.

(B) Each opening shall be maintained in a closed, sealed position (e.g., covered by a lid that is gasketed and latched) at all times that waste is in the oil-water separator except when it is necessary to use the opening for waste sampling or removal, or for equipment inspection, maintenance, or repair.

(C) If the cover and closed-vent system operate such that the oil-water separator is maintained at a pressure less than atmospheric pressure, then paragraph (a)(1)(i)(B) of this section does not apply to any opening that meets all of the following conditions:

(*1*) The purpose of the opening is to provide dilution air to reduce the explosion hazard;

(*2*) The opening is designed to operate with no detectable emissions as indicated by an instrument reading of less than 500 ppmv above background, as determined initially and thereafter at least once per year by the methods specified in §61.355(h); and

(*3*) The pressure is monitored continuously to ensure that the pressure in the oil-water separator remains below atmospheric pressure.

(ii) The closed-vent system and control device shall be designed and operated in accordance with the requirements of §61.349 of this subpart.

(b) Each cover seal, access hatch, and all other openings shall be checked by visual inspection initially and quarterly thereafter to ensure that no cracks or gaps occur between the cover and oil-water separator wall and that access hatches and other openings are closed and gasketed properly.

(c) Except as provided in § 61.350 of this subpart, when a broken seal or gasket or other problem is identified, or when detectable emissions are measured, first efforts at repair shall be made as soon as practicable, but not later than 15 calendar days after identification.

[55 FR 8346, Mar. 7, 1990, as amended at 58 FR 3098, Jan. 7, 1993]

§ 61.348 Standards: Treatment processes.

(a) Except as provided in paragraph (a)(5) of this section, the owner or operator shall treat the waste stream in accordance with the following requirements:

(1) The owner or operator shall design, install, operate, and maintain a treatment process that either:

(i) Removes benzene from the waste stream to a level less than 10 parts per million by weight (ppmw) on a flow-weighted annual average basis,

(ii) Removes benzene from the waste stream by 99 percent or more on a mass basis, or

(iii) Destroys benzene in the waste stream by incinerating the waste in a combustion unit that achieves a destruction efficiency of 99 percent or greater for benzene.

(2) Each treatment process complying with paragraphs (a)(1)(i) or (a)(1)(ii) of this section shall be designed and operated in accordance with the appropriate waste management unit standards specified in §§ 61.343 through 61.347 of this subpart. For example, if a treatment process is a tank, then the owner or operator shall comply with § 61.343 of this subpart.

(3) For the purpose of complying with the requirements specified in paragraph (a)(1)(i) of this section, the intentional or unintentional reduction in the benzene concentration of a waste stream by dilution of the waste stream with other wastes or materials is not allowed.

(4) An owner or operator may aggregate or mix together individual waste streams to create a combined waste stream for the purpose of facilitating treatment of waste to comply with the requirements of paragraph (a)(1) of this section except as provided in paragraph (a)(5) of this section.

(5) If an owner or operator aggregates or mixes any combination of process wastewater, product tank drawdown, or landfill leachate subject to § 61.342(c)(1) of this subpart together with other waste streams to create a combined waste stream for the purpose of facilitating management or treatment of waste in a wastewater treatment system, then the wastewater treatment system shall be operated in accordance with paragraph (b) of this section. These provisions apply to above-ground wastewater treatment systems as well as those that are at or below ground level.

(b) Except for facilities complying with § 61.342(e), the owner or operator that aggregates or mixes individual waste streams as defined in paragraph (a)(5) of this section for management and treatment in a wastewater treatment system shall comply with the following requirements:

(1) The owner or operator shall design and operate each waste management unit that comprises the wastewater treatment system in accordance with the appropriate standards specified in §§ 61.343 through 61.347 of this subpart.

(2) The provisions of paragraph (b)(1) of this section do not apply to any waste management unit that the owner or operator demonstrates to meet the following conditions initially and, thereafter, at least once per year:

(i) The benzene content of each waste stream entering the waste management unit is less than 10 ppmw on a flow-weighted annual average basis as determined by the procedures specified in § 61.355(c) of this subpart; and

(ii) The total annual benzene quantity contained in all waste streams managed or treated in exempt waste management units comprising the facility wastewater treatment systems is less than 1 Mg/yr (1.1 ton/yr). For this determination, total annual benzene quantity shall be calculated as follows:

(A) The total annual benzene quantity shall be calculated as the sum of the individual benzene quantities determined at each location where a waste stream first enters an exempt waste management unit. The benzene quantity discharged from an exempt

waste management unit shall not be included in this calculation.

(B) The annual benzene quantity in a waste stream managed or treated in an enhanced biodegradation unit shall not be included in the calculation of the total annual benzene quantity, if the enhanced biodegradation unit is the first exempt unit in which the waste is managed or treated. A unit shall be considered enhanced biodegradation if it is a suspended-growth process that generates biomass, uses recycled biomass, and periodically removes biomass from the process. An enhanced biodegradation unit typically operates at a food-to-microorganism ratio in the range of 0.05 to 1.0 kg of biological oxygen demand per kg of biomass per day, a mixed liquor suspended solids ratio in the range of 1 to 8 grams per liter (0.008 to 0.7 pounds per liter), and a residence time in the range of 3 to 36 hours.

(c) The owner and operator shall demonstrate that each treatment process or wastewater treatment system unit, except as provided in paragraph (d) of this section, achieves the appropriate conditions specified in paragraphs (a) or (b) of this section in accordance with the following requirements:

(1) Engineering calculations in accordance with requirements specified in §61.356(e) of this subpart; or

(2) Performance tests conducted using the test methods and procedures that meet the requirements specified in §61.355 of this subpart.

(d) A treatment process or waste stream is in compliance with the requirements of this subpart and exempt from the requirements of paragraph (c) of this section provided that the owner or operator documents that the treatment process or waste stream is in compliance with other regulatory requirements as follows:

(1) The treatment process is a hazardous waste incinerator for which the owner or operator has been issued a final permit under 40 CFR part 270 and complies with the requirements of 40 CFR part 264, subpart O;

(2) The treatment process is an industrial furnace or boiler burning hazardous waste for energy recovery for which the owner or operator has been issued a final permit under 40 CFR part 270 and complies with the requirements of 40 CFR part 266, subpart D;

(3) The waste stream is treated by a means or to a level that meets benzene-specific treatment standards in accordance with the Land Disposal Restrictions under 40 CFR part 268, and the treatment process is designed and operated with a closed-vent system and control device meeting the requirements of §61.349 of this subpart;

(4) The waste stream is treated by a means or to a level that meets benzene-specific effluent limitations or performance standards in accordance with the Effluent Guidelines and Standards under 40 CFR parts 401–464, and the treatment process is designed and operated with a closed-vent system and control device meeting the requirements of §61.349 of this subpart; or

(5) The waste stream is discharged to an underground injection well for which the owner or operator has been issued a final permit under 40 CFR part 270 and complies with the requirements of 40 CFR part 122.

(e) Except as specified in paragraph (e)(3) of this section, if the treatment process or wastewater treatment system unit has any openings (e.g., access doors, hatches, etc.), all such openings shall be sealed (e.g., gasketed, latched, etc.) and kept closed at all times when waste is being treated, except during inspection and maintenance.

(1) Each seal, access door, and all other openings shall be checked by visual inspections initially and quarterly thereafter to ensure that no cracks or gaps occur and that openings are closed and gasketed properly.

(2) Except as provided in §61.350 of this subpart, when a broken seal or gasket or other problem is identified, first efforts at repair shall be made as soon as practicable, but not later than 15 calendar days after identification.

(3) If the cover and closed-vent system operate such that the treatment process and wastewater treatment system unit are maintained at a pressure less than atmospheric pressure, the owner or operator may operate the system with an opening that is not sealed and kept closed at all times if the following conditions are met:

(i) The purpose of the opening is to provide dilution air to reduce the explosion hazard;

(ii) The opening is designed to operate with no detectable emissions as indicated by an instrument reading of less than 500 ppmv above background, as determined initially and thereafter at least once per year by the methods specified in § 61.355(h); and

(iii) The pressure is monitored continuously to ensure that the pressure in the treatment process and wastewater treatment system unit remain below atmospheric pressure.

(f) Except for treatment processes complying with paragraph (d) of this section, the Administrator may request at any time an owner or operator demonstrate that a treatment process or wastewater treatment system unit meets the applicable requirements specified in paragraphs (a) or (b) of this section by conducting a performance test using the test methods and procedures as required in § 61.355 of this subpart.

(g) The owner or operator of a treatment process or wastewater treatment system unit that is used to comply with the provisions of this section shall monitor the unit in accordance with the applicable requirements in § 61.354 of this subpart.

[55 FR 8346, Mar. 7, 1990, as amended at 55 FR 37231, Sept. 10, 1990; 58 FR 3098, Jan. 7, 1993; 65 FR 62160, Oct. 17, 2000]

§ 61.349 Standards: Closed-vent systems and control devices.

(a) For each closed-vent system and control device used to comply with standards in accordance with §§ 61.343 through 61.348 of this subpart, the owner or operator shall properly design, install, operate, and maintain the closed-vent system and control device in accordance with the following requirements:

(1) The closed-vent system shall:

(i) Be designed to operate with no detectable emissions as indicated by an instrument reading of less than 500 ppmv above background, as determined initially and thereafter at least once per year by the methods specified in § 61.355(h) of this subpart.

(ii) Vent systems that contain any bypass line that could divert the vent stream away from a control device used to comply with the provisions of this subpart shall install, maintain, and operate according to the manufacturer's specifications a flow indicator that provides a record of vent stream flow away from the control device at least once every 15 minutes, except as provided in paragraph (a)(1)(ii)(B) of this section.

(A) The flow indicator shall be installed at the entrance to any bypass line that could divert the vent stream away from the control device to the atmosphere.

(B) Where the bypass line valve is secured in the closed position with a car-seal or a lock-and-key type configuration, a flow indicator is not required.

(iii) All gauging and sampling devices shall be gas-tight except when gauging or sampling is taking place.

(iv) For each closed-vent system complying with paragraph (a) of this section, one or more devices which vent directly to the atmosphere may be used on the closed-vent system provided each device remains in a closed, sealed position during normal operations except when the device needs to open to prevent physical damage or permanent deformation of the closed-vent system resulting from malfunction of the unit in accordance with good engineering and safety practices for handling flammable, explosive, or other hazardous materials.

(2) The control device shall be designed and operated in accordance with the following conditions:

(i) An enclosed combustion device (e.g., a vapor incinerator, boiler, or process heater) shall meet one of the following conditions:

(A) Reduce the organic emissions vented to it by 95 weight percent or greater;

(B) Achieve a total organic compound concentration of 20 ppmv (as the sum of the concentrations for individual compounds using Method 18) on a dry basis corrected to 3 percent oxygen; or

(C) Provide a minimum residence time of 0.5 seconds at a minimum temperature of 760 °C (1,400 °F). If a boiler or process heater issued as the control device, then the vent stream shall be introduced into the flame zone of the boiler or process heater.

(ii) A vapor recovery system (e.g., a carbon adsorption system or a condenser) shall recover or control the organic emissions vented to it with an efficiency of 95 weight percent or greater, or shall recover or control the benzene emissions vented to it with an efficiency of 98 weight percent or greater.

(iii) A flare shall comply with the requirements of 40 CFR 60.18.

(iv) A control device other than those described in paragraphs (a)(2) (i) through (iii) of this section may be used provided that the following conditions are met:

(A) The device shall recover or control the organic emissions vented to it with an efficiency of 95 weight percent or greater, or shall recover or control the benzene emissions vented to it with an efficiency of 98 weight percent or greater.

(B) The owner or operator shall develop test data and design information that documents the control device will achieve an emission control efficiency of either 95 percent or greater for organic compounds or 98 percent or greater for benzene.

(C) The owner or operator shall identify:

(*1*) The critical operating parameters that affect the emission control performance of the device;

(*2*) The range of values of these operating parameters that ensure the emission control efficiency specified in paragraph (a)(2)(iv)(A) of this section is maintained during operation of the device; and

(*3*) How these operating parameters will be monitored to ensure the proper operation and maintenance of the device.

(D) The owner or operator shall submit the information and data specified in paragraphs (a)(2)(iv) (B) and (C) of this section to the Administrator prior to operation of the alternative control device.

(E) The Administrator will determine, based on the information submitted under paragraph (a)(2)(iv)(D) of this section, if the control device subiect to paragraph (a)(2)(iv) of this section meets the requirements of §61.349. The control device subject to paragraph (a)(2)(iv) of this section may be operated prior to receiving approval from the Administrator. However, if the Administrator determines that the control device does not meet the requirements of §61.349, the facility may be subject to enforcement action beginning from the time the control device began operation.

(b) Each closed-vent system and control device used to comply with this subpart shall be operated at all times when waste is placed in the waste management unit vented to the control device except when maintenance or repair of the waste management unit cannot be completed without a shutdown of the control device.

(c) An owner and operator shall demonstrate that each control device, except for a flare, achieves the appropriate conditions specified in paragraph (a)(2) of this section by using one of the following methods:

(1) Engineering calculations in accordance with requirements specified in §61.356(f) of this subpart; or

(2) Performance tests conducted using the test methods and procedures that meet the requirements specified in §61.355 of this subpart.

(d) An owner or operator shall demonstrate compliance of each flare in accordance with paragraph (a)(2)(iii) of this section.

(e) The Administrator may request at any time an owner or operator demonstrate that a control device meets the applicable conditions specified in paragraph (a)(2) of this section by conducting a performance test using the test methods and procedures as required in §61.355, and for control devices subject to paragraph (a)(2)(iv) of this section, the Administrator may specify alternative test methods and procedures, as appropriate.

(f) Each closed-vent system and control device shall be visually inspected initially and quarterly thereafter. The visual inspection shall include inspection of ductwork and piping and connections to covers and control devices for evidence of visable defects such as holes in ductwork or piping and loose connections.

(g) Except as provided in §61.350 of this subpart, if visible defects are observed during an inspection, or if other problems are identified, or if detectable

emissions are measured, a first effort to repair the closed-vent system and control device shall be made as soon as practicable but no later than 5 calendar days after detection. Repair shall be completed no later than 15 calendar days after the emissions are detected or the visible defect is observed.

(h) The owner or operator of a control device that is used to comply with the provisions of this section shall monitor the control device in accordance with § 61.354(c) of this subpart.

[55 FR 8346, Mar. 7, 1990; 55 FR 12444, Apr. 3, 1990, as amended at 55 FR 37231, Sept. 10, 1990; 58 FR 3098, Jan. 7, 1993; 65 FR 62160, Oct. 17, 2000]

§ 61.350 Standards: Delay of repair.

(a) Delay of repair of facilities or units that are subject to the provisions of this subpart will be allowed if the repair is technically impossible without a complete or partial facility or unit shutdown.

(b) Repair of such equipment shall occur before the end of the next facility or unit shutdown.

§ 61.351 Alternative standards for tanks.

(a) As an alternative to the standards for tanks specified in § 61.343 of this subpart, an owner or operator may elect to comply with one of the following:

(1) A fixed roof and internal floating roof meeting the requirements in 40 CFR 60.112b(a)(1);

(2) An external floating roof meeting the requirements of 40 CFR 60.112b (a)(2); or

(3) An alternative means of emission limitation as described in 40 CFR 60.114b.

(b) If an owner or operator elects to comply with the provisions of this section, then the owner or operator is exempt from the provisions of § 61.343 of this subpart applicable to the same facilities.

[55 FR 8346, Mar. 7, 1990, as amended at 55 FR 37231, Sept. 10, 1990]

§ 61.352 Alternative standards for oil-water separators.

(a) As an alternative to the standards for oil-water separators specified in § 61.347 of this subpart, an owner or operator may elect to comply with one of the following:

(1) A floating roof meeting the requirements in 40 CFR 60.693–2(a); or

(2) An alternative means of emission limitation as described in 40 CFR 60.694.

(b) For portions of the oil-water separator where it is infeasible to construct and operate a floating roof, such as over the weir mechanism, a fixed roof vented to a vapor control device that meets the requirements in §§ 61.347 and 61.349 of this subpart shall be installed and operated.

(c) Except as provided in paragraph (b) of this section, if an owner or operator elects to comply with the provisions of this section, then the owner or operator is exempt from the provisions in § 61.347 of this subpart applicable to the same facilities.

§ 61.353 Alternative means of emission limitation.

(a) If, in the Administrator's judgment, an alternative means of emission limitation will achieve a reduction in benzene emissions at least equivalent to the reduction in benzene emissions from the source achieved by the applicable design, equipment, work practice, or operational requirements in §§ 61.342 through 61.349, the Administrator will publish in the FEDERAL REGISTER a notice permitting the use of the alternative means for purposes of compliance with that requirement. The notice may condition the permission on requirements related to the operation and maintenance of the alternative means.

(b) Any notice under paragraph (a) of this section shall be published only after public notice and an opportunity for a hearing.

(c) Any person seeking permission under this section shall collect, verify, and submit to the Administrator information showing that the alternative means achieves equivalent emission reductions.

[55 FR 8346, Mar. 7, 1990, as amended at 58 FR 3099, Jan. 7, 1993]

§ 61.354 Monitoring of operations.

(a) Except for a treatment process or waste stream complying with § 61.348(d), the owner or operator shall

monitor each treatment process or wastewater treatment system unit to ensure the unit is properly operated and maintained by one of the following monitoring procedures:

(1) Measure the benzene concentration of the waste stream exiting the treatment process complying with §61.348(a)(1)(i) at least once per month by collecting and analyzing one or more samples using the procedures specified in §61.355(c)(3).

(2) Install, calibrate, operate, and maintain according to manufacturer's specifications equipment to continuously monitor and record a process parameter (or parameters) for the treatment process or wastewater treatment system unit that indicates proper system operation. The owner or operator shall inspect at least once each operating day the data recorded by the monitoring equipment (e.g., temperature monitor or flow indicator) to ensure that the unit is operating properly.

(b) If an owner or operator complies with the requirements of §61.348(b), then the owner or operator shall monitor each wastewater treatment system to ensure the unit is properly operated and maintained by the appropriate monitoring procedure as follows:

(1) For the first exempt waste management unit in each waste treatment train, other than an enhanced biodegradation unit, measure the flow rate, using the procedures of §61.355(b), and the benzene concentration of each waste stream entering the unit at least once per month by collecting and analyzing one or more samples using the procedures specified in §61.355(c)(3).

(2) For each enhanced biodegradation unit that is the first exempt waste management unit in a treatment train, measure the benzene concentration of each waste stream entering the unit at least once per month by collecting and analyzing one or more samples using the procedures specified in §61.355(c)(3).

(c) An owner or operator subject to the requirements in §61.349 of this subpart shall install, calibrate, maintain, and operate according to the manufacturer's specifications a device to continuously monitor the control device operation as specified in the following paragraphs, unless alternative monitoring procedures or requirements are approved for that facility by the Administrator. The owner or operator shall inspect at least once each operating day the data recorded by the monitoring equipment (e.g., temperature monitor or flow indicator) to ensure that the control device is operating properly.

(1) For a thermal vapor incinerator, a temperature monitoring device equipped with a continuous recorder. The device shall have an accuracy of ±1 percent of the temperature being monitored in °C or ±0.5 °C, whichever is greater. The temperature sensor shall be installed at a representative location in the combustion chamber.

(2) For a catalytic vapor incinerator, a temperature monitoring device equipped with a continuous recorder. The device shall be capable of monitoring temperature at two locations, and have an accuracy of ±1 percent of the temperature being monitored in °C or ±0.5 °C, whichever is greater. One temperature sensor shall be installed in the vent stream at the nearest feasible point to the catalyst bed inlet and a second temperature sensor shall be installed in the vent stream at the nearest feasible point to the catalyst bed outlet.

(3) For a flare, a monitoring device in accordance with 40 CFR 60.18(f)(2) equipped with a continuous recorder.

(4) For a boiler or process heater having a design heat input capacity less than 44 MW (150×10^6 BTU/hr), a temperature monitoring device equipped with a continuous recorder. The device shall have an accuracy of ±1 percent of the temperature being monitored in °C or ±0.5 °C, whichever is greater. The temperature sensor shall be installed at a representative location in the combustion chamber.

(5) For a boiler or process heater having a design heat input capacity greater than or equal to 44 MW (150×10^6 BTU/hr), a monitoring device equipped with a continuous recorder to measure a parameter(s) that indicates good combustion operating practices are being used.

(6) For a condenser, either:

(i) A monitoring device equipped with a continuous recorder to measure either the concentration level of the

organic compounds or the concentration level of benzene in the exhaust vent stream from the condenser; or

(ii) A temperature monitoring device equipped with a continuous recorder. The device shall be capable of monitoring temperature at two locations, and have an accuracy of ±1 percent of the temperature being monitored in °C or ±0.5 °C, whichever is greater. One temperature sensor shall be installed at a location in the exhaust stream from the condenser, and a second temperature sensor shall be installed at a location in the coolant fluid exiting the condenser.

(7) For a carbon adsorption system that regenerates the carbon bed directly in the control device such as a fixed-bed carbon adsorber, either:

(i) A monitoring device equipped with a continuous recorder to measure either the concentration level of the organic compounds or the benzene concentration level in the exhaust vent stream from the carbon bed; or

(ii) A monitoring device equipped with a continuous recorder to measure a parameter that indicates the carbon bed is regenerated on a regular, predetermined time cycle.

(8) For a vapor recovery system other than a condenser or carbon adsorption system, a monitoring device equipped with a continuous recorder to measure either the concentration level of the organic compounds or the benzene concentration level in the exhaust vent stream from the control device.

(9) For a control device subject to the requirements of §61.349(a)(2)(iv), devices to monitor the parameters as specified in §61.349(a)(2)(iv)(C).

(d) For a carbon adsorption system that does not regenerate the carbon bed directly on site in the control device (e.g., a carbon canister), either the concentration level of the organic compounds or the concentration level of benzene in the exhaust vent stream from the carbon adsorption system shall be monitored on a regular schedule, and the existing carbon shall be replaced with fresh carbon immediately when carbon breakthrough is indicated. The device shall be monitored on a daily basis or at intervals no greater than 20 percent of the design carbon replacement interval, whichever is greater. As an alternative to conducting this monitoring, an owner or operator may replace the carbon in the carbon adsorption system with fresh carbon at a regular predetermined time interval that is less than the carbon replacement interval that is determined by the maximum design flow rate and either the organic concentration or the benzene concentration in the gas stream vented to the carbon adsorption system.

(e) An alternative operation or process parameter may be monitored if it can be demonstrated that another parameter will ensure that the control device is operated in conformance with these standards and the control device's design specifications.

(f) Owners or operators using a closed-vent system that contains any bypass line that could divert a vent stream from a control device used to comply with the provisions of this subpart shall do the following:

(1) Visually inspect the bypass line valve at least once every month, checking the position of the valve and the condition of the car-seal or closure mechanism required under §61.349(a)(1)(ii) to ensure that the valve is maintained in the closed position and the vent stream is not diverted through the bypass line.

(2) Visually inspect the readings from each flow monitoring device required by §61.349(a)(1)(ii) at least once each operating day to check that vapors are being routed to the control device as required.

(g) Each owner or operator who uses a system for emission control that is maintained at a pressure less than atmospheric pressure with openings to provide dilution air shall install, calibrate, maintain, and operate according to the manufacturer's specifications a device equipped with a continuous recorder to monitor the pressure in the unit to ensure that it is less than atmospheric pressure.

[55 FR 8346, Mar. 7, 1990, as amended at 58 FR 3099, Jan. 7, 1993; 65 FR 62160, Oct. 17, 2000]

§61.355 Test methods, procedures, and compliance provisions.

(a) An owner or operator shall determine the total annual benzene quantity from facility waste by the following procedure:

(1) For each waste stream subject to this subpart having a flow-weighted annual average water content greater than 10 percent water, on a volume basis as total water, or is mixed with water or other wastes at any time and the resulting mixture has an annual average water content greater than 10 percent as specified in §61.342(a), the owner or operator shall:

(i) Determine the annual waste quantity for each waste stream using the procedures specified in paragraph (b) of this section.

(ii) Determine the flow-weighted annual average benzene concentration for each waste stream using the procedures specified in paragraph (c) of this section.

(iii) Calculate the annual benzene quantity for each waste stream by multiplying the annual waste quantity of the waste stream times the flow-weighted annual average benzene concentration.

(2) Total annual benzene quantity from facility waste is calculated by adding together the annual benzene quantity for each waste stream generated during the year and the annual benzene quantity for each process unit turnaround waste annualized according to paragraph (b)(4) of this section.

(3) If the total annual benzene quantity from facility waste is equal to or greater than 10 Mg/yr (11 ton/yr), then the owner or operator shall comply with the requirements of §61.342 (c), (d), or (e).

(4) If the total annual benzene quantity from facility waste is less than 10 Mg/yr (11 ton/yr) but is equal to or greater than 1 Mg/yr (1.1 ton/yr), then the owner or operator shall:

(i) Comply with the recordkeeping requirements of §61.356 and reporting requirements of §61.357 of this subpart; and

(ii) Repeat the determination of total annual benzene quantity from facility waste at least once per year and whenever there is a change in the process generating the waste that could cause the total annual benzene quantity from facility waste to increase to 10 Mg/yr (11 ton/yr) or more.

(5) If the total annual benzene quantity from facility waste is less than 1 Mg/yr (1.1 ton/yr), then the owner or operator shall:

(i) Comply with the recordkeeping requirements of §61.356 and reporting requirements of §61.357 of this subpart; and

(ii) Repeat the determination of total annual benzene quantity from facility waste whenever there is a change in the process generating the waste that could cause the total annual benzene quantity from facility waste to increase to 1 Mg/yr (1.1 ton/yr) or more.

(6) The benzene quantity in a waste stream that is generated less than one time per year, except as provided for process unit turnaround waste in paragraph (b)(4) of this section, shall be included in the determination of total annual benzene quantity from facility waste for the year in which the waste is generated unless the waste stream is otherwise excluded from the determination of total annual benzene quantity from facility waste in accordance with paragraphs (a) through (c) of this section. The benzene quantity in this waste stream shall not be annualized or averaged over the time interval between the activities that resulted in generation of the waste, for purposes of determining the total annual benzene quantity from facility waste.

(b) For purposes of the calculation required by paragraph (a) of this section, an owner or operator shall determine the annual waste quantity at the point of waste generation, unless otherwise provided in paragraphs (b) (1), (2), (3), and (4) of this section, by one of the methods given in paragraphs (b) (5) through (7) of this section.

(1) The determination of annual waste quantity for sour water streams that are processed in sour water strippers shall be made at the point that the water exits the sour water stripper.

(2) The determination of annual waste quantity for wastes at coke by-product plants subject to and complying with the control requirements of §61.132, 61.133, 61.134, or 61.139 of subpart L of this part shall be made at the location that the waste stream exits

the process unit component or waste management unit controlled by that subpart or at the exit of the ammonia still, provided that the following conditions are met:

(i) The transfer of wastes between units complying with the control requirements of subpart L of this part, process units, and the ammonia still is made through hard piping or other enclosed system.

(ii) The ammonia still meets the definition of a sour water stripper in § 61.341.

(3) The determination of annual waste quantity for wastes that are received at hazardous waste treatment, storage, or disposal facilities from offsite shall be made at the point where the waste enters the hazardous waste treatment, storage, or disposal facility.

(4) The determination of annual waste quantity for each process unit turnaround waste generated only at 2 year or greater intervals, may be made by dividing the total quantity of waste generated during the most recent process unit turnaround by the time period (in the nearest tenth of a year) between the turnaround resulting in generation of the waste and the most recent preceding process turnaround for the unit. The resulting annual waste quantity shall be included in the calculation of the annual benzene quantity as provided in paragraph (a)(1)(iii) of this section for the year in which the turnaround occurs and for each subsequent year until the unit undergoes the next process turnaround. For estimates of total annual benzene quantity as specified in the 90-day report, required under § 61.357(a)(1), the owner or operator shall estimate the waste quantity generated during the most recent turnaround, and the time period between turnarounds in accordance with good engineering practices. If the owner or operator chooses not to annualize process unit turnaround waste, as specified in this paragraph, then the process unit turnaround waste quantity shall be included in the calculation of the annual benzene quantity for the year in which the turnaround occurs.

(5) Select the highest annual quantity of waste managed from historical records representing the most recent 5 years of operation or, if the facility has been in service for less than 5 years but at least 1 year, from historical records representing the total operating life of the facility;

(6) Use the maximum design capacity of the waste management unit; or

(7) Use measurements that are representative of maximum waste generation rates.

(c) For the purposes of the calculation required by §§ 61.355(a) of this subpart, an owner or operator shall determine the flow-weighted annual average ben- zene concentration in a manner that meets the requirements given in paragraph (c)(1) of this section using either of the methods given in paragraphs (c)(2) and (c)(3) of this section.

(1) The determination of flow-weighted annual average benzene concentration shall meet all of the following criteria:

(i) The determination shall be made at the point of waste generation except for the specific cases given in paragraphs (c)(1)(i)(A) through (D) of this section.

(A) The determination for sour water streams that are processed in sour water strippers shall be made at the point that the water exits the sour water stripper.

(B) The determination for wastes at coke by-product plants subject to and complying with the control requirements of § 61.132, 61.133, 61.134, or 61.139 of subpart L of this part shall be made at the location that the waste stream exits the process unit component or waste management unit controlled by that subpart or at the exit of the ammonia still, provided that the following conditions are met:

(*1*) The transfer of wastes between units complying with the control requirements of subpart L of this part, process units, and the ammonia still is made through hard piping or other enclosed system.

(*2*) The ammonia still meets the definition of a sour water stripper in § 61.341.

(C) The determination for wastes that are received from offsite shall be made at the point where the waste enters the hazardous waste treatment, storage, or disposal facility.

(D) The determination of flow-weighted annual average benzene concentration for process unit turnaround waste shall be made using either of the methods given in paragraph (c)(2) or (c)(3) of this section. The resulting flow-weighted annual average benzene concentration shall be included in the calculation of annual benzene quantity as provided in paragraph (a)(1)(iii) of this section for the year in which the turnaround occurs and for each subsequent year until the unit undergoes the next process unit turnaround.

(ii) Volatilization of the benzene by exposure to air shall not be used in the determination to reduce the benzene concentration.

(iii) Mixing or diluting the waste stream with other wastes or other materials shall not be used in the determination—to reduce the benzene concentration.

(iv) The determination shall be made prior to any treatment of the waste that removes benzene, except as specified in paragraphs (c)(1)(i)(A) through (D) of this section.

(v) For wastes with multiple phases, the determination shall provide the weighted-average benzene concentration based on the benzene concentration in each phase of the waste and the relative proportion of the phases.

(2) *Knowledge of the waste.* The owner or operator shall provide sufficient information to document the flow-weighted annual average benzene concentration of each waste stream. Examples of information that could constitute knowledge include material balances, records of chemicals purchases, or previous test results provided the results are still relevant to the current waste stream conditions. If test data are used, then the owner or operator shall provide documentation describing the testing protocol and the means by which sampling variability and analytical variability were accounted for in the determination of the flow-weighted annual average benzene concentration for the waste stream. When an owner or operator and the Administrator do not agree on determinations of the flow-weighted annual average benzene concentration based on knowledge of the waste, the procedures under paragraph (c)(3) of this section shall be used to resolve the disagreement.

(3) Measurements of the benzene concentration in the waste stream in accordance with the following procedures:

(i) Collect a minimum of three representative samples from each waste stream. Where feasible, samples shall be taken from an enclosed pipe prior to the waste being exposed to the atmosphere.

(ii) For waste in enclosed pipes, the following procedures shall be used:

(A) Samples shall be collected prior to the waste being exposed to the atmosphere in order to minimize the loss of benzene prior to sampling.

(B) A static mixer shall be installed in the process line or in a by-pass line unless the owner or operator demonstrates that installation of a static mixer in the line is not necessary to accurately determine the benzene concentration of the waste stream.

(C) The sampling tap shall be located within two pipe diameters of the static mixer outlet.

(D) Prior to the initiation of sampling, sample lines and cooling coil shall be purged with at least four volumes of waste.

(E) After purging, the sample flow shall be directed to a sample container and the tip of the sampling tube shall be kept below the surface of the waste during sampling to minimize contact with the atmosphere.

(F) Samples shall be collected at a flow rate such that the cooling coil is able to maintain a waste temperature less than 10 °C (50 °F).

(G) After filling, the sample container shall be capped immediately (within 5 seconds) to leave a minimum headspace in the container.

(H) The sample containers shall immediately be cooled and maintained at a temperature below 10 °C (50 °F) for transfer to the laboratory.

(iii) When sampling from an enclosed pipe is not feasible, a minimum of three representative samples shall be collected in a manner to minimize exposure of the sample to the atmosphere and loss of benzene prior to sampling.

(iv) Each waste sample shall be analyzed using one of the following test

methods for determining the benzene concentration in a waste stream:

(A) Method 8020, Aromatic Volatile Organics, in ''Test Methods for Evaluating Solid Waste, Physical/Chemical Methods,'' EPA Publication No. SW–846 (incorporation by reference as specified in § 61.18 of this part);

(B) Method 8021, Volatile Organic Compounds in Water by Purge and Trap Capillary Column Gas Chromatography with Photoionization and Electrolytic Conductivity Detectors in Series in ''Test Methods for Evaluating Solid Waste, Physical/Chemical Methods,'' EPA Publication No. SW–846 (incorporation by reference as specified in § 61.18 of this part);

(C) Method 8240, Gas Chromatography/Mass Spectrometry for Volatile Organics in ''Test Methods for Evaluating Solid Waste, Physical/Chemical Methods,'' EPA Publication No. SW–846 (incorporation by reference as specified in § 61.18 of this part);

(D) Method 8260, Gas Chromatography/Mass Spectrometry for Volatile Organics: Capillary Column Technique in ''Test Methods for Evaluating Solid Waste, Physical/Chemical Methods,'' EPA Publication No. SW–846 (incorporation by reference as specified in § 61.18 of this part);

(E) Method 602, Purgeable Aromatics, as described in 40 CFR part 136, appendix A, Test Procedures for Analysis of Organic Pollutants, for wastewaters for which this is an approved EPA methods; or

(F) Method 624, Purgeables, as described in 40 CFR part 136, appendix A, Test Procedures for Analysis of Organic Pollutants, for wastewaters for which this is an approved EPA method.

(v) The flow-weighted annual average benzene concentration shall be calculated by averaging the results of the sample analyses as follows:

$$\overline{C} = \frac{1}{Q_t} \times \sum_{i=1}^{n} (Q_i)(C_i)$$

Where:

$\overline{C}$=Flow-weighted annual average benzene concentration for waste stream, ppmw.

Q_t=Total annual waste quantity for waste stream, kg/yr (lb/yr).

n=Number of waste samples (at least 3).

Q_i=Annual waste quantity for waste stream represented by C_i, kg/yr (lb/yr).

C_i=Measured concentration of benzene in waste sample i, ppmw.

(d) An owner or operator using performance tests to demonstrate compliance of a treatment process with § 61.348 (a)(1)(i) shall measure the flow-weighted annual average benzene concentration of the waste stream exiting the treatment process by collecting and analyzing a minimum of three representative samples of the waste stream using the procedures in paragraph (c)(3) of this section. The test shall be conducted under conditions that exist when the treatment process is operating at the highest inlet waste stream flow rate and benzene content expected to occur. Operations during periods of startup, shutdown, and malfunction shall not constitute representative conditions for the purpose of a test. The owner or operator shall record all process information as is necessary to document the operating conditions during the test.

(e) An owner or operator using performance tests to demonstrate compliance of a treatment process with § 61.348(a)(1)(ii) of this subpart shall determine the percent reduction of benzene in the waste stream on a mass basis by the following procedure:

(1) The test shall be conducted under conditions that exist when the treatment process is operating at the highest inlet waste stream flow rate and benzene content expected to occur. Operations during periods of startup, shutdown, and malfunction shall not constitute representative conditions for the purpose of a test. The owner or operator shall record all process information as is necessary to document the operating conditions during the test.

(2) All testing equipment shall be prepared and installed as specified in the appropriate test methods.

(3) The mass flow rate of benzene entering the treatment process (E_b) shall be determined by computing the product of the flow rate of the waste stream entering the treatment process, as determined by the inlet flow meter, and the benzene concentration of the waste stream, as determined using the sampling and analytical procedures specified in paragraph (c)(2) or (c)(3) of this

section. Three grab samples of the waste shall be taken at equally spaced time intervals over a 1-hour period. Each 1-hour period constitutes a run, and the performance test shall consist of a minimum of 3 runs conducted over a 3-hour period. The mass flow rate of benzene entering the treatment process is calculated as follows:

$$E_b = \frac{K}{n \times 10^6}\left[\sum_{i=1}^{n} V_i C_i\right]$$

Where:

E_b = Mass flow rate of benzene entering the treatment process, kg/hr (lb/hr).

K = Density of the waste stream, kg/m³ (lb/ft³).

V_i = Average volume flow rate of waste entering the treatment process during each run i, m³/hr (ft³/hr).

C_i = Average concentration of benzene in the waste stream entering the treatment process during each run i, ppmw.

n = Number of runs.

10^6 = Conversion factor for ppmw.

(4) The mass flow rate of benzene exiting the treatment process (E_a) shall be determined by computing the product of the flow rate of the waste stream exiting the treatment process, as determined by the outlet flow meter or the inlet flow meter, and the benzene concentration of the waste stream, as determined using the sampling and analytical procedures specified in paragraph (c)(2) or (c)(3) of this section. Three grab samples of the waste shall be taken at equally spaced time intervals over a 1-hour period. Each 1-hour period constitutes a run, and the performance test shall consist of a minimum of 3 runs conducted over the same 3-hour period at which the mass flow rate of benzene entering the treatment process is determined. The mass flow rate of benzene exiting the treatment process is calculated as follows:

$$E_a = \frac{K}{n \times 10^6}\left[\sum_{i=1}^{n} V_i C_i\right]$$

Where:

E_a = Mass flow rate of benzene exiting the treatment process, kg/hr (lb/hr).

K = Density of the waste stream, kg/m³ (lb/ft³).

V_i = Average volume flow rate of waste exiting the treatment process during each run i, m³/hr (ft³/hr).

C_i = Average concentration of benzene in the waste stream exiting the treatment process during each run i, ppmw.

n = Number of runs.

10^6 = Conversion factor for ppmw.

(f) An owner or operator using performance tests to demonstrate compliance of a treatment process with §61.348(a)(1)(iii) of this subpart shall determine the benzene destruction efficiency for the combustion unit by the following procedure:

(1) The test shall be conducted under conditions that exist when the combustion unit is operating at the highest inlet waste stream flow rate and benzene content expected to occur. Operations during periods of startup, shutdown, and malfunction shall not constitute representative conditions for the purpose of a test. The owner or operator shall record all process information necessary to document the operating conditions during the test.

(2) All testing equipment shall be prepared and installed as specified in the appropriate test methods.

(3) The mass flow rate of benzene entering the combustion unit shall be determined by computing the product of the flow rate of the waste stream entering the combustion unit, as determined by the inlet flow meter, and the benzene concentration of the waste stream, as determined using the sampling procedures in paragraph (c)(2) or (c)(3) of this section. Three grab samples of the waste shall be taken at equally spaced time intervals over a 1-hour period. Each 1-hour period constitutes a run, and the performance test shall consist of a minimum of 3 runs conducted over a 3-hour period. The mass flow rate of benzene into the combustion unit is calculated as follows:

$$E_b = \frac{K}{n \times 10^6}\left[\sum_{i=1}^{n} V_i C_i\right]$$

Where:

E_b = Mass flow rate of benzene entering the combustion unit, kg/hr (lb/hr).

K = Density of the waste stream, kg/m³ (lb/ft³).

V_i = Average volume flow rate of waste entering the combustion unit during each run i, m^3/hr (ft^3/hr).
C_i = Average concentration of benzene in the waste stream entering the combustion unit during each run i, ppmw.
n = Number of runs.
10^6 = Conversion factor for ppmw.

(4) The mass flow rate of benzene exiting the combustion unit exhaust stack shall be determined as follows:

(i) The time period for the test shall not be less than 3 hours during which at least 3 stack gas samples are collected and be the same time period at which the mass flow rate of benzene entering the treatment process is determined. Each sample shall be collected over a 1-hour period (e.g., in a tedlar bag) to represent a time-integrated composite sample and each 1-hour period shall correspond to the periods when the waste feed is sampled.

(ii) A run shall consist of a 1-hour period during the test. For each run:

(A) The reading from each measurement shall be recorded;

(B) The volume exhausted shall be determined using Method 2, 2A, 2C, or 2D from appendix A of 40 CFR part 60, as appropriate.

(C) The average benzene concentration in the exhaust downstream of the combustion unit shall be determined using Method 18 from appendix A of 40 CFR part 60.

(iii) The mass of benzene emitted during each run shall be calculated as follows:

$$M_i = D_b V C \left(10^{-6}\right)$$

Where:

M_i = Mass of benzene emitted during run i, kg (lb).
V = Volume of air-vapor mixture exhausted at standard conditions, m^3 (ft^3).
C = Concentration of benzene measured in the exhaust, ppmv.
D_b = Density of benzene, 3.24 kg/m^3 (0.202 lb/ft^3).
10^6 = Conversion factor for ppmv.

(iv) The benzene mass emission rate in the exhaust shall be calculated as follows:

$$E_a = \left(\sum_{i=1}^{n} M_i\right) / T$$

Where:

E_a = Mass flow rate of benzene emitted from the combustion unit, kg/hr (lb/hr).
M_i = Mass of benzene emitted from the combustion unit during run i, kg (lb).
T = Total time of all runs, hr.
n = Number of runs.

(5) The benzene destruction efficiency for the combustion unit shall be calculated as follows:

$$R = \frac{E_b - E_a}{E_b} \times 100$$

Where:

R = Benzene destruction efficiency for the combustion unit, percent.
E_b = Mass flow rate of benzene entering the combustion unit, kg/hr (lb/hr).
E_a = Mass flow rate of benzene emitted from the combustion unit, kg/hr (lb/hr).

(g) An owner or operator using performance tests to demonstrate compliance of a wastewater treatment system unit with § 61.348(b) shall measure the flow-weighted annual average benzene concentration of the wastewater stream where the waste stream enters an exempt waste management unit by collecting and analyzing a minimum of three representative samples of the waste stream using the procedures in paragraph (c)(3) of this section. The test shall be conducted under conditions that exist when the wastewater treatment system is operating at the highest inlet wastewater stream flow rate and benzene content expected to occur. Operations during periods of startup, shutdown, and malfunction shall not constitute representative conditions for the purpose of a test. The owner or operator shall record all process information as is necessary to document the operating conditions during the test.

(h) An owner or operator shall test equipment for compliance with no detectable emissions as required in §§ 61.343 through 61.347, and § 61.349 of this subpart in accordance with the following requirements:

(1) Monitoring shall comply with Method 21 from appendix A of 40 CFR part 60.

(2) The detection instrument shall meet the performance criteria of Method 21.

(3) The instrument shall be calibrated before use on each day of its use by the procedures specified in Method 21.

(4) Calibration gases shall be:

(i) Zero air (less than 10 ppm of hydrocarbon in air); and

(ii) A mixture of methane or n-hexane and air at a concentration of approximately, but less than, 10,000 ppm methane or n-hexane.

(5) The background level shall be determined as set forth in Method 21.

(6) The instrument probe shall be traversed around all potential leak interfaces as close as possible to the interface as described in Method 21.

(7) The arithmetic difference between the maximum concentration indicated by the instrument and the background level is compared to 500 ppm for determining compliance.

(i) An owner or operator using a performance test to demonstrate compliance of a control device with either the organic reduction efficiency requirement or the benzene reduction efficiency requirement specified under §61.349(a)(2) shall use the following procedures:

(1) The test shall be conducted under conditions that exist when the waste management unit vented to the control device is operating at the highest load or capacity level expected to occur. Operations during periods of startup, shutdown, and malfunction shall not constitute representative conditions for the purpose of a test. The owner or operator shall record all process information necessary to document the operating conditions during the test.

(2) Sampling sites shall be selected using Method 1 or 1A from appendix A of 40 CFR part 60, as appropriate.

(3) The mass flow rate of either the organics or benzene entering and exiting the control device shall be determined as follows:

(i) The time period for the test shall not be less than 3 hours during which at least 3 stack gas samples are collected. Samples of the vent stream entering and exiting the control device shall be collected during the same time period. Each sample shall be collected over a 1-hour period (e.g., in a tedlar bag) to represent a time-integrated composite sample.

(ii) A run shall consist of a 1-hour period during the test. For each run:

(A) The reading from each measurement shall be recorded;

(B) The volume exhausted shall be determined using Method 2, 2A, 2C, or 2D from appendix A of 40 CFR part 60, as appropriate;

(C) The organic concentration or the benzene concentration, as appropriate, in the vent stream entering and exiting the control shall be determined using Method 18 from appendix A of 40 CFR part 60.

(iii) The mass of organics or benzene entering and exiting the control device during each run shall be calculated as follows:

$$M_{aj} = \frac{K_1 V_{aj}}{10^6}\left(\sum_{i=1}^{n} C_{ai} MW_i\right)$$

$$M_{bj} = \frac{K_1 V_{bj}}{10^6}\left(\sum_{i=1}^{n} C_{bi} MW_i\right)$$

M_{aj} = Mass of organics or benzene in the vent stream entering the control device during run j, kg (lb).

M_{bj} = Mass of organics or benzene in the vent stream exiting the control device during run j, kg (lb).

V_{aj} = Volume of vent stream entering the control device during run j, at standard conditions, m^3 (ft^3).

V_{bj} = Volume of vent stream exiting the control device during run j, at standard conditions, m^3 (ft^3).

C_{ai} = Organic concentration of compound i or the benzene concentration measured in the vent stream entering the control device as determined by Method 18, ppm by volume on a dry basis.

C_{bi} = Organic concentration of compound i or the benzene concentration measured in the vent stream exiting the control device as determined by Method 18, ppm by volume on a dry basis.

MW_i = Molecular weight of organic compound i in the vent stream, or the molecular weight of benzene, kg/kg-mol (lb/lb-mole).

n = Number of organic compounds in the vent stream; if benzene reduction efficiency is being demonstrated, then n=1.

K_1 = Conversion factor for molar volume at standard conditions (293 K and 760 mm Hg (527 R and 14.7 psia))

= 0.0416 kg-mol/m^3 (0.00118 lb-mol/ft^3)

10^{-6}=Conversion factor for ppmv.

(iv) The mass flow rate of organics or benzene entering and exiting the control device shall be calculated as follows:

$$E_a - \left(\sum_{j=1}^{n} M_{aj} \right) / T$$

$$E_b - \left(\sum_{j=1}^{n} M_{bj} \right) / T$$

Where:

E_a = Mass flow rate of organics or benzene entering the control device, kg/hr (lb/hr).

E_b = Mass flow rate of organics or benzene exiting the control device, kg/hr (lb/hr).

M_{aj} = Mass of organics or benzene in the vent stream entering the control device during run j, kg (lb).

M_{bj} = Mass of organics or benzene in the vent stream exiting the control device during run j, kg (lb).

T = Total time of all runs, hr.

n = Number of runs.

(4) The organic reduction efficiency or the benzene reduction efficiency for the control device shall be calculated as follows:

$$R = \frac{E_a - E_b}{E_a} \times 100$$

Where:

R = Total organic reduction of efficiency or benzene reduction efficiency for the control device, percent.

E_b = Mass flow rate of organics or benzene entering the control device, kg/hr (lb/hr).

E_a = Mass flow rate of organic or benzene emitted from the control device, kg/hr (lb/hr).

(j) An owner or operator shall determine the benzene quantity for the purposes of the calculation required by § 61.342 (c)(3)(ii)(B) according to the provisions of paragraph (a) of this section, except that the procedures in paragraph (a) of this section shall also apply to wastes with a water content of 10 percent or less.

(k) An owner or operator shall determine the benzene quantity for the purposes of the calculation required by § 61.342(e)(2) by the following procedure:

(1) For each waste stream that is not controlled for air emissions in accordance with § 61.343. 61.344, 61.345, 61.346, 61.347, or 61.348(a), as applicable to the waste management unit that manages the waste, the benzene quantity shall be determined as specified in paragraph (a) of this section, except that paragraph (b)(4) of this section shall not apply, i.e., the waste quantity for process unit turnaround waste is not annualized but shall be included in the determination of benzene quantity for the year in which the waste is generated for the purposes of the calculation required by § 61.342(e)(2).

(2) For each waste stream that is controlled for air emissions in accordance with § 61.343. 61.344, 61.345, 61.346, 61.347, or 61.348(a), as applicable to the waste management unit that manages the waste, the determination of annual waste quantity and flow-weighted annual average benzene concentration shall be made at the first applicable location as described in paragraphs (k)(2)(i), (k)(2)(ii), and (k)(2)(iii) of this section and prior to any reduction of benzene concentration through volatilization of the benzene, using the methods given in (k)(2)(iv) and (k)(2)(v) of this section.

(i) Where the waste stream enters the first waste management unit not complying with §§ 61.343, 61.344, 61.345, 61.346, 61.347, and 61.348(a) that are applicable to the waste management unit,

(ii) For each waste stream that is managed or treated only in compliance with §§ 61.343 through 61.348(a) up to the point of final direct discharge from the facility, the determination of benzene quantity shall be prior to any reduction of benzene concentration through volatilization of the benzene, or

(iii) For wastes managed in units controlled for air emissions in accordance with §§ 61.343, 61.344, 61.345, 61.346, 61.347, and 61.348(a), and then transferred offsite, facilities shall use the first applicable offsite location as described in paragraphs (k)(2)(i) and (k)(2)(ii) of this section if they have documentation from the offsite facility of the benzene quantity at this location. Facilities without this documentation for offsite wastes shall use the benzene quantity determined at the

point where the transferred waste leaves the facility.

(iv) Annual waste quantity shall be determined using the procedures in paragraphs (b)(5), (6), or (7) of this section, and

(v) The flow-weighted annual average benzene concentration shall be determined using the procedures in paragraphs (c)(2) or (3) of this section.

(3) The benzene quantity in a waste stream that is generated less than one time per year, including process unit turnaround waste, shall be included in the determination of benzene quantity as determined in paragraph (k)(6) of this section for the year in which the waste is generated. The benzene quantity in this waste stream shall not be annualized or averaged over the time interval between the activities that resulted in generation of the waste for purposes of determining benzene quantity as determined in paragraph (k)(6) of this section.

(4) The benzene in waste entering an enhanced biodegradation unit, as defined in §61.348(b)(2)(ii)(B), shall not be included in the determination of benzene quantity, determined in paragraph (k)(6) of this section, if the following conditions are met:

(i) The benzene concentration for each waste stream entering the enhanced biodegradation unit is less than 10 ppmw on a flow-weighted annual average basis, and

(ii) All prior waste management units managing the waste comply with §§61.343, 61.344, 61.345, 61.346, 61.347 and 61.348(a).

(5) The benzene quantity for each waste stream in paragraph (k)(2) of this section shall be determined by multiplying the annual waste quantity of each waste stream times its flow-weighted annual average benzene concentration.

(6) The total benzene quantity for the purposes of the calculation required by §61.342(e)(2) shall be determined by adding together the benzene quantities determined in paragraphs (k)(1) and (k)(5) of this section for each applicable waste stream.

(7) If the benzene quantity determined in paragraph (6) of this section exceeds 6.0 Mg/yr (6.6 ton/yr) only because of multiple counting of the benzene quantity for a waste stream, the owner or operator may use the following procedures for the purposes of the calculation required by §61.342(e)(2):

(i) Determine which waste management units are involved in the multiple counting of benzene;

(ii) Determine the quantity of benzene that is emitted, recovered, or removed from the affected units identified in paragraph (k)(7)(i) of this section, or destroyed in the units if applicable, using either direct measurements or the best available estimation techniques developed or approved by the Administrator.

(iii) Adjust the benzene quantity to eliminate the multiple counting of benzene based on the results from paragraph (k)(7)(ii) of this section and determine the total benzene quantity for the purposes of the calculation required by §61.342(e)(2).

(iv) Submit in the annual report required under §61.357(a) a description of the methods used and the resulting calculations for the alternative procedure under paragraph (k)(7) of this section, the benzene quantity determination from paragraph (k)(6) of this section, and the adjusted benzene quantity determination from paragraph (k)(7)(iii) of this section.

[55 FR 8346, Mar. 7, 1990; 55 FR 12444, Apr. 3, 1990, as amended at 55 FR 37231, Sept. 10, 1990; 58 FR 3099, Jan. 7, 1993; 65 FR 62160, Oct. 17, 2000]

§61.356 Recordkeeping requirements.

(a) Each owner or operator of a facility subject to the provisions of this subpart shall comply with the recordkeeping requirements of this section. Each record shall be maintained in a readily accessible location at the facility site for a period not less than two years from the date the information is recorded unless otherwise specified.

(b) Each owner or operator shall maintain records that identify each waste stream at the facility subject to this subpart, and indicate whether or not the waste stream is controlled for benzene emissions in accordance with this subpart. In addition the owner or operator shall maintain the following records:

(1) For each waste stream not controlled for benzene emissions in accordance with this subpart, the records shall include all test results, measurements, calculations, and other documentation used to determine the following information for the waste stream: waste stream identification, water content, whether or not the waste stream is a process wastewater stream, annual waste quantity, range of benzene concentrations, annual average flow-weighted benzene concentration, and annual benzene quantity.

(2) For each waste stream exempt from §61.342(c)(1) in accordance with §61.342(c)(3), the records shall include:

(i) All measurements, calculations, and other documentation used to determine that the continuous flow of process wastewater is less than 0.02 liters (0.005 gallons) per minute or the annual waste quantity of process wastewater is less than 10 Mg/yr (11 ton/yr) in accordance with §61.342(c)(3)(i), or

(ii) All measurements, calculations, and other documentation used to determine that the sum of the total annual benzene quantity in all exempt waste streams does not exceed 2.0 Mg/yr (2.2 ton/yr) in accordance with §61.342(c)(3)(ii).

(3) For each facility where process wastewater streams are controlled for benzene emissions in accordance with §61.342(d) of this subpart, the records shall include for each treated process wastewater stream all measurements, calculations, and other documentation used to determine the annual benzene quantity in the process wastewater stream exiting the treatment process.

(4) For each facility where waste streams are controlled for benzene emissions in accordance with §61.342(e), the records shall include for each waste stream all measurements, including the locations of the measurements, calculations, and other documentation used to determine that the total benzene quantity does not exceed 6.0 Mg/yr (6.6 ton/yr).

(5) For each facility where the annual waste quantity for process unit turnaround waste is determined in accordance with §61.355(b)(5), the records shall include all test results, measurements, calculations, and other documentation used to determine the following information: identification of each process unit at the facility that undergoes turnarounds, the date of the most recent turnaround for each process unit, identification of each process unit turnaround waste, the water content of each process unit turnaround waste, the annual waste quantity determined in accordance with §61.355(b)(5), the range of benzene concentrations in the waste, the annual average flow-weighted benzene concentration of the waste, and the annual benzene quantity calculated in accordance with §61.355(a)(1)(iii) of this section.

(6) For each facility where wastewater streams are controlled for benzene emissions in accordance with §61.348(b)(2), the records shall include all measurements, calculations, and other documentation used to determine the annual benzene content of the waste streams and the total annual benzene quantity contained in all waste streams managed or treated in exempt waste management units.

(c) An owner or operator transferring waste off-site to another facility for treatment in accordance with §61.342(f) shall maintain documentation for each offsite waste shipment that includes the following information: Date waste is shipped offsite, quantity of waste shipped offsite, name and address of the facility receiving the waste, and a copy of the notice sent with the waste shipment.

(d) An owner or operator using control equipment in accordance with §§61.343 through 61.347 shall maintain engineering design documentation for all control equipment that is installed on the waste management unit. The documentation shall be retained for the life of the control equipment. If a control device is used, then the owner or operator shall maintain the control device records required by paragraph (f) of this section.

(e) An owner or operator using a treatment process or wastewater treatment system unit in accordance with §61.348 of this subpart shall maintain the following records. The documentation shall be retained for the life of the unit.

(1) A statement signed and dated by the owner or operator certifying that the unit is designed to operate at the documented performance level when the waste stream entering the unit is at the highest waste stream flow rate and benzene content expected to occur.

(2) If engineering calculations are used to determine treatment process or wastewater treatment system unit performance, then the owner or operator shall maintain the complete design analysis for the unit. The design analysis shall include for example the following information: Design specifications, drawings, schematics, piping and instrumentation diagrams, and other documentation necessary to demonstrate the unit performance.

(3) If performance tests are used to determine treatment process or wastewater treatment system unit performance, then the owner or operator shall maintain all test information necessary to demonstrate the unit performance.

(i) A description of the unit including the following information: type of treatment process; manufacturer name and model number; and for each waste stream entering and exiting the unit, the waste stream type (e.g., process wastewater, sludge, slurry, etc.), and the design flow rate and benzene content.

(ii) Documentation describing the test protocol and the means by which sampling variability and analytical variability were accounted for in the determination of the unit performance. The description of the test protocol shall include the following information: sampling locations, sampling method, sampling frequency, and analytical procedures used for sample analysis.

(iii) Records of unit operating conditions during each test run including all key process parameters.

(iv) All test results.

(4) If a control device is used, then the owner or operator shall maintain the control device records required by paragraph (f) of this section.

(f) An owner or operator using a closed-vent system and control device in accordance with §61.349 of this subpart shall maintain the following records. The documentation shall be retained for the life of the control device.

(1) A statement signed and dated by the owner or operator certifying that the closed-vent system and control device is designed to operate at the documented performance level when the waste management unit vented to the control device is or would be operating at the highest load or capacity expected to occur.

(2) If engineering calculations are used to determine control device performance in accordance with §61.349(c), then a design analysis for the control device that includes for example:

(i) Specifications, drawings, schematics, and piping and instrumentation diagrams prepared by the owner or operator, or the control device manufacturer or vendor that describe the control device design based on acceptable engineering texts. The design analysis shall address the following vent stream characteristics and control device operating parameters:

(A) For a thermal vapor incinerator, the design analysis shall consider the vent stream composition, constituent concentrations, and flow rate. The design analysis shall also establish the design minimum and average temperature in the combustion zone and the combustion zone residence time.

(B) For a catalytic vapor incinerator, the design analysis shall consider the vent stream composition, constituent concentrations, and flow rate. The design analysis shall also establish the design minimum and average temperatures across the catalyst bed inlet and outlet.

(C) For a boiler or process heater, the design analysis shall consider the vent stream composition, constituent concentrations, and flow rate. The design analysis shall also establish the design minimum and average flame zone temperatures, combustion zone residence time, and description of method and location where the vent stream is introduced into the flame zone.

(D) For a flare, the design analysis shall consider the vent stream composition, constituent concentrations, and flow rate. The design analysis shall also consider the requirements specified in 40 CFR 60.18.

(E) For a condenser, the design analysis shall consider the vent stream composition, constituent concentration, flow rate, relative humidity, and temperature. The design analysis shall also establish the design outlet organic compound concentration level or the design outlet benzene concentration level, design average temperature of the condenser exhaust vent stream, and the design average temperatures of the coolant fluid at the condenser inlet and outlet.

(F) For a carbon adsorption system that regenerates the carbon bed directly on-site in the control device such as a fixed-bed adsorber, the design analysis shall consider the vent stream composition, constituent concentration, flow rate, relative humidity, and temperature. The design analysis shall also establish the design exhaust vent stream organic compound concentration level or the design exhaust vent stream benzene concentration level, number and capacity of carbon beds, type and working capacity of activated carbon used for carbon beds, design total steam flow over the period of each complete carbon bed regeneration cycle, duration of the carbon bed steaming and cooling/drying cycles, design carbon bed temperature after regeneration, design carbon bed regeneration time, and design service life of carbon.

(G) For a carbon adsorption system that does not regenerate the carbon bed directly on-site in the control device, such as a carbon canister, the design analysis shall consider the vent stream composition, constituent concentration, flow rate, relative humidity, and temperature. The design analysis shall also establish the design exhaust vent stream organic compound concentration level or the design exhaust vent stream benzene concentration level, capacity of carbon bed, type and working capacity of activated carbon used for carbon bed, and design carbon replacement interval based on the total carbon working capacity of the control device and source operating schedule.

(H) For a control device subject to the requirements of §61.349(a)(2)(iv), the design analysis shall consider the vent stream composition, constituent concentration, and flow rate. The design analysis shall also include all of the information submitted under §61.349 (a)(2)(iv).

(ii) [Reserved]

(3) If performance tests are used to determine control device performance in accordance with §61.349(c) of this subpart:

(i) A description of how it is determined that the test is conducted when the waste management unit or treatment process is operating at the highest load or capacity level. This description shall include the estimated or design flow rate and organic content of each vent stream and definition of the acceptable operating ranges of key process and control parameters during the test program.

(ii) A description of the control device including the type of control device, control device manufacturer's name and model number, control device dimensions, capacity, and construction materials.

(iii) A detailed description of sampling and monitoring procedures, including sampling and monitoring locations in the system, the equipment to be used, sampling and monitoring frequency, and planned analytical procedures for sample analysis.

(iv) All test results.

(g) An owner or operator shall maintain a record for each visual inspection required by §§61.343 through 61.347 of this subpart that identifies a problem (such as a broken seal, gap or other problem) which could result in benzene emissions. The record shall include the date of the inspection, waste management unit and control equipment location where the problem is identified, a description of the problem, a description of the corrective action taken, and the date the corrective action was completed.

(h) An owner or operator shall maintain a record for each test of no detectable emissions required by §§61.343 through 61.347 and §61.349 of this subpart. The record shall include the following information: date the test is performed, background level measured during test, and maximum concentration indicated by the instrument reading measured for each potential leak interface. If detectable emissions are

measured at a leak interface, then the record shall also include the waste management unit, control equipment, and leak interface location where detectable emissions were measured, a description of the problem, a description of the corrective action taken, and the date the corrective action was completed.

(i) For each treatment process and wastewater treatment system unit operated to comply with §61.348, the owner or operator shall maintain documentation that includes the following information regarding the unit operation:

(1) Dates of startup and shutdown of the unit.

(2) If measurements of waste stream benzene concentration are performed in accordance with §61.354(a)(1) of this subpart, the owner or operator shall maintain records that include date each test is performed and all test results.

(3) If a process parameter is continuously monitored in accordance with §61.354(a)(2) of this subpart, the owner or operator shall maintain records that include a description of the operating parameter (or parameters) to be monitored to ensure that the unit will be operated in conformance with these standards and the unit's design specifications, and an explanation of the criteria used for selection of that parameter (or parameters). This documentation shall be kept for the life of the unit.

(4) If measurements of waste stream benzene concentration are performed in accordance with §61.354(b), the owner or operator shall maintain records that include the date each test is performed and all test results.

(5) Periods when the unit is not operated as designed.

(j) For each control device, the owner or operator shall maintain documentation that includes the following information regarding the control device operation:

(1) Dates of startup and shutdown of the closed-vent system and control device.

(2) A description of the operating parameter (or parameters) to be monitored to ensure that the control device will be operated in conformance with these standards and the control device's design specifications and an explanation of the criteria used for selection of that parameter (or parameters). This documentation shall be kept for the life of the control device.

(3) Periods when the closed-vent system and control device are not operated as designed including all periods and the duration when:

(i) Any valve car-seal or closure mechanism required under §61.349(a)(1)(ii) is broken or the by-pass line valve position has changed.

(ii) The flow monitoring devices required under §61.349(a)(1)(ii) indicate that vapors are not routed to the control device as required.

(4) If a thermal vapor incinerator is used, then the owner or operator shall maintain continuous records of the temperature of the gas stream in the combustion zone of the incinerator and records of all 3-hour periods of operation during which the average temperature of the gas stream in the combustion zone is more than 28 °C (50 °F) below the design combustion zone temperature.

(5) If a catalytic vapor incinerator is used, then the owner or operator shall maintain continuous records of the temperature of the gas stream both upstream and downstream of the catalyst bed of the incinerator, records of all 3-hour periods of operation during which the average temperature measured before the catalyst bed is more than 28 °C (50 °F) below the design gas stream temperature, and records of all 3-hour periods of operation during which the average temperature difference across the catalyst bed is less than 80 percent of the design temperature difference.

(6) If a boiler or process heater is used, then the owner or operator shall maintain records of each occurrence when there is a change in the location at which the vent stream is introduced into the flame zone as required by §61.349(a)(2)(i)(C). For a boiler or process heater having a design heat input capacity less than 44 MW (150 × 106 BTU/hr), the owner or operator shall maintain continuous records of the temperature of the gas stream in the

combustion zone of the boiler or process heater and records of all 3-hour periods of operation during which the average temperature of the gas stream in the combustion zone is more than 28 °C (50 °F) below the design combustion zone temperature. For a boiler or process heater having a design heat input capacity greater than or equal to 44 MW (150 × 106 BTU/hr), the owner or operator shall maintain continuous records of the parameter(s) monitored in accordance with the requirements of § 61.354(c)(5).

(7) If a flare is used, then the owner or operator shall maintain continuous records of the flare pilot flame monitoring and records of all periods during which the pilot flame is absent.

(8) If a condenser is used, then the owner or operator shall maintain records from the monitoring device of the parameters selected to be monitored in accordance with § 61.354(c)(6). If concentration of organics or concentration of benzene in the control device outlet gas stream is monitored, then the owner or operator shall record all 3-hour periods of operation during which the concentration of organics or the concentration of benzene in the exhaust stream is more than 20 percent greater than the design value. If the temperature of the condenser exhaust stream and coolant fluid is monitored, then the owner or operator shall record all 3-hour periods of operation during which the temperature of the condenser exhaust vent stream is more than 6 °C (11 °F) above the design average exhaust vent stream temperature, or the temperature of the coolant fluid exiting the condenser is more than 6 °C (11 °F) above the design average coolant fluid temperature at the condenser outlet.

(9) If a carbon adsorber is used, then the owner or operator shall maintain records from the monitoring device of the concentration of organics or the concentration of benzene in the control device outlet gas stream. If the concentration of organics or the concentration of benzene in the control device outlet gas stream is monitored, then the owner or operator shall record all 3-hour periods of operation during which the concentration of organics or the concentration of benzene in the exhaust stream is more than 20 percent greater than the design value. If the carbon bed regeneration interval is monitored, then the owner or operator shall record each occurrence when the vent stream continues to flow through the control device beyond the predetermined carbon bed regeneration time.

(10) If a carbon adsorber that is not regenerated directly on site in the control device is used, then the owner or operator shall maintain records of dates and times when the control device is monitored, when breakthrough is measured, and shall record the date and time then the existing carbon in the control device is replaced with fresh carbon.

(11) If an alternative operational or process parameter is monitored for a control device, as allowed in § 61.354(e) of this subpart, then the owner or operator shall maintain records of the continuously monitored parameter, including periods when the device is not operated as designed.

(12) If a control device subject to the requirements of § 61.349(a)(2)(iv) is used, then the owner or operator shall maintain records of the parameters that are monitored and each occurrence when the parameters monitored are outside the range of values specified in § 61.349(a)(2)(iv)(C), or other records as specified by the Administrator.

(k) An owner or operator who elects to install and operate the control equipment in § 61.351 of this subpart shall comply with the recordkeeping requirements in 40 CFR 60.115b.

(l) An owner or operator who elects to install and operate the control equipment in § 61.352 of this subpart shall maintain records of the following:

(1) The date, location, and corrective action for each visual inspection required by 40 CFR 60.693–2(a)(5), during which a broken seal, gap, or other problem is identified that could result in benzene emissions.

(2) Results of the seal gap measurements required by 40 CFR 60.693–2(a).

(m) If a system is used for emission control that is maintained at a pressure less than atmospheric pressure with openings to provide dilution air, then the owner or operator shall maintain records of the monitoring device and records of all periods during which

the pressure in the unit is operated at a pressure that is equal to or greater than atmospheric pressure.

(n) Each owner or operator using a total enclosure to comply with control requirements for tanks in §61.343 or the control requirements for containers in §61.345 must keep the records required in paragraphs (n)(1) and (2) of this section. Owners or operators may use records as required in 40 CFR 264.1089(b)(2)(iv) or 40 CFR 265.1090(b)(2)(iv) for a tank or as required in 40 CFR 264.1089(d)(1) or 40 CFR 265.1090(d)(1) for a container to meet the recordkeeping requirement in paragraph (n)(1) of this section. The owner or operator must make the records of each verification of a total enclosure available for inspection upon request.

(1) Records of the most recent set of calculations and measurements performed to verify that the enclosure meets the criteria of a permanent total enclosure as specified in ''Procedure T—Criteria for and Verification of a Permanent or Temporary Total Enclosure'' in 40 CFR 52.741, appendix B;

(2) Records required for a closed-vent system and control device according to the requirements in paragraphs (d) (f), and (j) of this section.

[55 FR 8346, Mar. 7, 1990; 55 FR 12444, Apr. 3, 1990; 55 FR 18331, May 2, 1990, as amended at 58 FR 3103, Jan. 7, 1993; 65 FR 62161, Oct. 17, 2000; 67 FR 68533, Nov. 12, 2002]

§61.357 Reporting requirements.

(a) Each owner or operator of a chemical plant, petroleum refinery, coke byproduct recovery plant, and any facility managing wastes from these industries shall submit to the Administrator within 90 days after January 7, 1993, or by the initial startup for a new source with an initial startup after the effective date, a report that summarizes the regulatory status of each waste stream subject to §61.342 and is determined by the procedures specified in §61.355(c) to contain benzene. Each owner or operator subject to this subpart who has no benzene onsite in wastes, products, byproducts, or intermediates shall submit an initial report that is a statement to this effect. For all other owners or operators subject to this subpart, the report shall include the following information:

(1) Total annual benzene quantity from facility waste determined in accordance with §61.355(a) of this subpart.

(2) A table identifying each waste stream and whether or not the waste stream will be controlled for benzene emissions in accordance with the requirements of this subpart.

(3) For each waste stream identified as not being controlled for benzene emissions in accordance with the requirements of this subpart the following information shall be added to the table:

(i) Whether or not the water content of the waste stream is greater than 10 percent;

(ii) Whether or not the waste stream is a process wastewater stream, product tank drawdown, or landfill leachate;

(iii) Annual waste quantity for the waste stream;

(iv) Range of benzene concentrations for the waste stream;

(v) Annual average flow-weighted benzene concentration for the waste stream; and

(vi) Annual benzene quantity for the waste stream.

(4) The information required in paragraphs (a) (1), (2), and (3) of this section should represent the waste stream characteristics based on current configuration and operating conditions. An owner or operator only needs to list in the report those waste streams that contact materials containing benzene. The report does not need to include a description of the controls to be installed to comply with the standard or other information required in §61.10(a).

(b) If the total annual benzene quantity from facility waste is less than 1 Mg/yr (1.1 ton/yr), then the owner or operator shall submit to the Administrator a report that updates the information listed in paragraphs (a)(1) through (a)(3) of this section whenever there is a change in the process generating the waste stream that could cause the total annual benzene quantity from facility waste to increase to 1 Mg/yr (1.1 ton/yr) or more.

(c) If the total annual benzene quantity from facility waste is less than 10

Mg/yr (11 ton/yr) but is equal to or greater than 1 Mg/yr (1.1 ton/yr), then the owner or operator shall submit to the Administrator a report that updates the information listed in paragraphs (a)(1) through (a)(3) of this section. The report shall be submitted annually and whenever there is a change in the process generating the waste stream that could cause the total annual benzene quantity from facility waste to increase to 10 Mg/yr (11 ton/yr) or more. If the information in the annual report required by paragraphs (a)(1) through (a)(3) of this section is not changed in the following year, the owner or operator may submit a statement to that effect.

(d) If the total annual benzene quantity from facility waste is equal to or greater than 10 Mg/yr (11 ton/yr), then the owner or operator shall submit to the Administrator the following reports:

(1) Within 90 days after January 7, 1993, unless a waiver of compliance under § 61.11 of this part is granted, or by the date of initial startup for a new source with an initial startup after the effective date, a certification that the equipment necessary to comply with these standards has been installed and that the required initial inspections or tests have been carried out in accordance with this subpart. If a waiver of compliance is granted under § 61.11, the certification of equipment necessary to comply with these standards shall be submitted by the date the waiver of compliance expires.

(2) Beginning on the date that the equipment necessary to comply with these standards has been certified in accordance with paragraph (d)(1) of this section, the owner or operator shall submit annually to the Administrator a report that updates the information listed in paragraphs (a)(1) through (a)(3) of this section. If the information in the annual report required by paragraphs (a)(1) through (a)(3) of this section is not changed in the following year, the owner or operator may submit a statement to that effect.

(3) If an owner or operator elects to comply with the requirements of § 61.342(c)(3)(ii), then the report required by paragraph (d)(2) of this section shall include a table identifying each waste stream chosen for exemption and the total annual benzene quantity in these exempted streams.

(4) If an owner or operator elects to comply with the alternative requirements of § 61.342(d) of this subpart, then he shall include in the report required by paragraph (d)(2) of this section a table presenting the following information for each process wastewater stream:

(i) Whether or not the process wastewater stream is being controlled for benzene emissions in accordance with the requirements of this subpart;

(ii) For each process wastewater stream identified as not being controlled for benzene emissions in accordance with the requirements of this subpart, the table shall report the following information for the process wastewater stream as determined at the point of waste generation: annual waste quantity, range of benzene concentrations, annual average flow-weighted benzene concentration, and annual benzene quantity;

(iii) For each process wastewater stream identified as being controlled for benzene emissions in accordance with the requirements of this subpart, the table shall report the following information for the process wastewater stream as determined at the exit to the treatment process: Annual waste quantity, range of benzene concentrations, annual average flow-weighted benzene concentration, and annual benzene quantity.

(5) If an owner or operator elects to comply with the alternative requirements of § 61.342(e), then the report required by paragraph (d)(2) of this section shall include a table presenting the following information for each waste stream:

(i) For each waste stream identified as not being controlled for benzene emissions in accordance with the requirements of this subpart; the table shall report the following information for the waste stream as determined at the point of waste generation: annual waste quantity, range of benzene concentrations, annual average flow-weighted benzene concentration, and annual benzene quantity;

(ii) For each waste stream identified as being controlled for benzene emissions in accordance with the requirements of this subpart; the table shall report the following information for the waste stream as determined at the applicable location described in §61.355(k)(2): Annual waste quantity, range of benzene concentrations, annual average flow-weighted benzene concentration, and annual benzene quantity.

(6) Beginning 3 months after the date that the equipment necessary to comply with these standards has been certified in accordance with paragraph (d)(1) of this section, the owner or operator shall submit quarterly to the Administrator a certification that all of the required inspections have been carried out in accordance with the requirements of this subpart.

(7) Beginning 3 months after the date that the equipment necessary to comply with these standards has been certified in accordance with paragraph (d)(1) of this section, the owner or operator shall submit a report quarterly to the Administrator that includes:

(i) If a treatment process or wastewater treatment system unit is monitored in accordance with §61.354(a)(1) of this subpart, then each period of operation during which the concentration of benzene in the monitored waste stream exiting the unit is equal to or greater than 10 ppmw.

(ii) If a treatment process or wastewater treatment system unit is monitored in accordance with §61.354(a)(2) of this subpart, then each 3-hour period of operation during which the average value of the monitored parameter is outside the range of acceptable values or during which the unit is not operating as designed.

(iii) If a treatment process or wastewater treatment system unit is monitored in accordance with §61.354(b), then each period of operation during which the flow-weighted annual average concentration of benzene in the monitored waste stream entering the unit is equal to or greater than 10 ppmw and/or the total annual benzene quantity is equal to or greater than 1.0 mg/yr.

(iv) For a control device monitored in accordance with §61.354(c) of this subpart, each period of operation monitored during which any of the following conditions occur, as applicable to the control device:

(A) Each 3-hour period of operation during which the average temperature of the gas stream in the combustion zone of a thermal vapor incinerator, as measured by the temperature monitoring device, is more than 28 °C (50 °F) below the design combustion zone temperature.

(B) Each 3-hour period of operation during which the average temperature of the gas stream immediately before the catalyst bed of a catalytic vapor incinerator, as measured by the temperature monitoring device, is more than 28 °C (50 °F) below the design gas stream temperature, and any 3-hour period during which the average temperature difference across the catalyst bed (i.e., the difference between the temperatures of the gas stream immediately before and after the catalyst bed), as measured by the temperature monitoring device, is less than 80 percent of the design temperature difference.

(C) Each 3-hour period of operation during which the average temperature of the gas stream in the combustion zone of a boiler or process heater having a design heat input capacity less than 44 MW (150 × 106 BTU/hr), as mesured by the temperature monitoring device, is more than 28 °C (50 °F) below the design combustion zone temperature.

(D) Each 3-hour period of operation during which the average concentration of organics or the average concentration of benzene in the exhaust gases from a carbon adsorber, condenser, or other vapor recovery system is more than 20 percent greater than the design concentration level of organics or benzene in the exhaust gas.

(E) Each 3-hour period of operation during which the temperature of the condenser exhaust vent stream is more than 6 °C (11 °F) above the design average exhaust vent stream temperature, or the temperature of the coolant fluid exiting the condenser is more than 6 °C (11 °F) above the design average coolant fluid temperature at the condenser outlet.

(F) Each period in which the pilot flame of a flare is absent.

(G) Each occurrence when there is a change in the location at which the vent stream is introduced into the flame zone of a boiler or process heater as required by § 61.349(a)(2)(i)(C) of this subpart.

(H) Each occurrence when the carbon in a carbon adsorber system that is regenerated directly on site in the control device is not regenerated at the predetermined carbon bed regeneration time.

(I) Each occurrence when the carbon in a carbon adsorber system that is not regenerated directly on site in the control device is not replaced at the predetermined interval specified in § 61.354(c) of this subpart.

(J) Each 3-hour period of operation during which the parameters monitored are outside the range of values specified in § 61.349(a)(2)(iv)(C), or any other periods specified by the Administrator for a control device subject to the requirements of § 61.349(a)(2)(iv).

(v) For a cover and closed-vent system monitored in accordance with § 61.354(g), the owner or operator shall submit a report quarterly to the Administrator that identifies any period in which the pressure in the waste management unit is equal to or greater than atmospheric pressure.

(8) Beginning one year after the date that the equipment necessary to comply with these standards has been certified in accordance with paragraph (d)(1) of this section, the owner or operator shall submit annually to the Administrator a report that summarizes all inspections required by §§ 61.342 through 61.354 during which detectable emissions are measured or a problem (such as a broken seal, gap or other problem) that could result in benzone emissions is identified, including information about the repairs or corrective action taken.

(e) An owner or operator electing to comply with the provisions of §§ 61.351 or 61.352 of this subpart shall notify the Administrator of the alternative standard selected in the report required under § 61.07 or § 61.10 of this part.

(f) An owner or operator who elects to install and operate the control equipment in § 61.351 of this subpart shall comply with the reporting requirements in 40 CFR 60.115b.

(g) An owner or operator who elects to install and operate the control equipment in § 61.352 of this subpart shall submit initial and quarterly reports that identify all seal gap measurements, as required in 40 CFR 60.693–2(a), that are outside the prescribed limits.

[55 FR 8346, Mar. 7 1990; 55 FR 12444, Apr. 3, 1990, as amended at 55 FR 37231, Sept. 10, 1990; 58 FR 3105, Jan. 7, 1993; 65 FR 62161, Oct. 17, 2000]

§ 61.358 Delegation of authority.

(a) In delegating implementation and enforcement authority to a State under section 112(d) of the Clean Air Act, the authorities contained in paragraph (b) of this section shall be retained by the Administrator and not transferred to a State.

(b) Alternative means of emission limitation under § 61.353 of this subpart will not be delegated to States.

§ 61.359 [Reserved]

APPENDIX A TO PART 61

APPENDIX A

National Emission Standards for Hazardous Air Pollutants

Compliance Status Information

I. SOURCE REPORT

INSTRUCTIONS: Owners or operators of sources of hazardous pollutants subject to the National Emission Standards for Hazardous Air Pollutants are required to submit the information contained in Section I to the appropriate U.S. Environmental Protection Agency Regional Office prior to 90 days after the effective date of any standards or amendments which require the submission of such information.

A list of regional offices is provided in §61.04.

A. SOURCE INFORMATION

1. Identification/Location - Indicate the name and address of each source.

1 2 Region | 3 4 State | 5 8 County | 9 13 Source Number | 0 0 0 14 16 | 0 0 17 18 | 1 19

20 22 AQCR # | 23 26 City Code | 27 Source Name 46

47 Street Address (Location of Plant) 66 | 80

Dup 1-18 | 19 | 20 City Name 34 | State 35 39

40 State Regis. Number 54 | 55 58 NEDS X Ref.

59 SIC 62 | FF 64 | 8 A/P 65 | 77 79 Staff | 80

Dup 1-18 | 5 19 | CS 30 | SIP 31 | EC 49 | 80

2. Contact - Indicate the name and telephone number of the owner or operator or other responsible official whom EPA may contact concerning this report.

Dup 1-18 4 1 (19–20) 21 Name 43

44–46 Area Code 47 - Number 54 80

3. Source Description - Briefly state the nature of the source (e.g., "Chlor-alkali Plant" or "Machine Shop").

Dup 1-18 4 2 (19–20) 21 Description 50

51 Continued 79 80

4. Alternative Mailing Address - Indicate an alternative mailing address if correspondence is to be directed to a location different than that specified above.

Dup 1-18 4 3 (19–20) 21 Number Street or Box Number 45 80

Dup 1-18 4 4 (19–20) 21 City 35 37–38 State 41 Zip 44 80

5. Compliance Status - The emissions from this source ___ can ___ cannot meet the emission limitations contained in the National Emission Standards on or prior to 90 days after the effective date of any standards or amendments which require the submission of such information.

Signature of Owner, Operator or Other Responsible Official

NOTE: If the emissions from the source will exceed those limits set by the National Emission Standards for Hazardous Air Pollutants, the source will be in violation and subject to Federal enforcement actions unless granted a waiver of compliance by the Administrator of the U.S. Environmental Protection Agency. The information needed for such waivers is listed in Section II of this form.

B. PROCESS INFORMATION. Part B should be completed separately for each point of emission for each hazardous pollutant. [Sources subject to 61.22(1) may omit number 4. below.]

Dup 1-13 14–16 17–18 0 0 19 5 20 SCC 27 28–29 NEDS X Ref 30 LS 31 SIP

1. Pollutant Emitted - Indicate the type of hazardous pollutant emitted by the process. Indicate "AB" for asbestos, "BE" for beryllium, or "HG" for mercury.

32 33
Pollutant | 34 Regulation 48 | 49 EC

2. Process Description - Provide a brief description of each process (e.g., "hydrogen end box" in a mercury chlor-alkali plant, "grinding machine" in a beryllium machine shop). Use additional sheets if necessary.

50 Process Description 74 | 80

Dup 1-18 6 1
19 20 21 50

51 79 80

Dup 1-18 6 2
19 20 21 50

51 79 80

3. Amount of Pollutant - Indicate the average weight of the hazardous material named in Item 1 which enters the process in pounds per month (based on the previous twelve months of operation).

Dup 1-18 6 3
19 20 | 21 27 | lbs./mo. 29 36 80

4. Control Devices
a. Indicate the type of pollution control devices, if any, used to reduce the emissions from the process (e.g., venturi scrubber, baghouse, wet cyclone) and the estimated percent of the pollutant which the device removes from the process gas stream.

Dup 1-18 6 4 PRIMARY CONTROL DEVICE:
19 20 21 43

45 Primary Device Name 64 | 66 70 Percent Removal Efficiency | 72 79

80

```
Dup 1-18   6 5          SECONDARY CONTROL DEVICES:
          19  20   21                                  45

                                                  % EFFIC.
47      Secondary Device Name      64   66          70  72          79   80
                                        Percent Removal
                                          Efficiency
```

b. Asbestos Emission Control Devices Only

i. If a baghouse is specified in Item 4a, give the following information:

- The air flow permeability in cubic feet per minute per square foot of fabric area.

  Air flow permeability = _____ cfm/ft^2

- The pressure drop in inches water gauge across the filter at which the baghouse is operated.

  Operating pressure drop = _____ inches w.g.

- If the baghouse material contains synthetic fill yarn, check whether this material is / / spun / / or not spun.

- If the baghouse utilizes a felted fabric, give the minimum thickness in inches and the density in ounces per square yard.

  Thickness = _____ inches Density = _____ oz/yd^2

ii. If a wet collection device is specified in Item 4a, give the designed unit contacting energy in inches water gauge.

- Unit contacting energy = _____ inches w.g.

C. DISPOSAL OF ASBESTOS-CONTAINING WASTES. Part C should be completed separately for each asbestos-containing waste generation operation arising from sources subject to §61.22(a), (c), (e), and (h).

```
Dup 1-13                 0 0     5
          14    16   17   18   19   20          SCC          27   28  29        30   31
                                                                 NEDS X Ref     CS   SIP

  A B
 32  33   34          Regulation          48      49
Pollutant                                         EC
```

1. Waste Generation - Provide a brief description of each process that generates asbestos-containing waste (e.g. disposal of control device wastes).

50 Process Description 79 80

2. Asbestos Concentration - Indicate the average percentage asbestos content of these materials.

Dup 1-18 6 1 ASBESTOS CONCENTRATION:
19 20 21 43 45 48

%
50 80

3. Amount of Wastes - Indicate the average weight of asbestos-containing wastes disposed of, measured in kg/day.

Dup 1-18 6 2 kg/day
19 20 21 27 29 34 80

4. Control Methods - Indicate the emission control methods used in all stages of waste disposal, from collection, processing, and packaging to transporting and deposition.

Dup 1-18 6 3 Primary Control Method
19 20 21 43

45 79 80

Dup 1-18 6 4
19 20 21 50

51 79 80

5. Waste Disposal - Indicate the type of disposal site (sanitary landfill, open, covered) or incineration site (municipal, private) where the waste is disposed of and who operates the site (company, private, municipal). State the name and location of the site (closest city or town, county, state).

Dup 1-18 6 5 TYPE OF SITE:
19 20 21 33 35 50

51 79 80

```
Dup 1-18   6 6          OPERATOR:
          19  20       21          29   31                    50

51                                                   79   80
Dup 1-18   6 7          LOCATION:
          19  20       21          29

31                                                                70

71                          79   80
```

D. WASTE DISPOSAL SITES. Part D should be completed separately for each asbestos waste disposal site subject to section 61.22(1).

```
Dup 1-13                 0 0   5
          14    16    17  18  19  20      SCC      27  28   29    30   31
                                                      NEDS X Ref  CS   SIP

  A B
 32  33    34     Regulation        48    49
Pollutant                                EC

              WASTE DISPOSAL SITE
50                                   68    80
```

1. Description - Provide a brief description of the site, including its size and configuration, and the distance to the closest city or town, closest residence, and closest primary road.

```
Dup 1-18   6 1          SITE DESCRIPTION
          19  20       21                  37   39                50

51                                                   79    80

Dup 1-18   6 2       DISTANCE:        TOWN:                    K M
          19  20 21            29 30          34   36        40 42  43

      RESIDENCE:                      K M        ROAD:
45                  54   56       60 62  63   65        69   71       75

 K M
77  78     80
```

2. Inactivation - After the site is inactivated, indicate the method or methods used to comply with the standard and send a list of the actions that will be undertaken to maintain the inactivated site.

```
                                          COMPLIANCE
Dup 1-18   6 8                METHOD/INACTIVE SITE:
          19  20       21                                      52

54                                                   79   80
```

II. WAIVER REQUESTS

A. *Waiver of Compliance.* Owners or operators of sources unable to operate in compliance with the National Emission Standards for Hazardous Air Pollutants prior to 90 days after the effective date of any standards or

amendments which require the submission of such information may request a waiver of compliance from the Administrator of the U.S. Environmental Protection Agency for the time period necessary to install appropriate control devices or make modifications to achieve compliance. The Administrator may grant a waiver of compliance with the standard for a period not exceeding two years from the effective date of the hazardous pollutant standards, if he finds that such period is necessary for the installation of controls and that steps will be taken during the period of the waiver to assure that the health of persons will be protected from imminent endangerment.

The report information provided in Section I must accompany this application. Applications should be sent to the appropriate EPA regional office.

1. *Processes Involved*—Indicate the process or processes emitting hazardous pollutants to which emission controls are to be applied.

2. *Controls*

a. Describe the proposed type of control device to be added or modification to be made to the process to reduce the emission of hazardous pollutants to an acceptable level. (Use additional sheets if necessary.)

b. Describe the measures that will be taken during the waiver period to assure that the health of persons will be protected from imminent endangerment. (Use additional sheets if necessary.)

3. *Increments of Progress*—Specify the dates by which the following increments of progress will be met.

Date by which contracts for emission control systems or process modifications will be awarded; or date by which orders will be issued for the purchase of the component parts to accomplish emission control or process modification.

```
Dup 1-16      0 1 7
              17   19   53 54   55          60   61   MO/DY/YR    66   80
```

Date of initiation of on-site construction or installation of emission control equipment or process change.

```
Dup 1-16      0 2 7
              17   19   53 54   55          60   61   MO/DY/YR    66   80
```

Date by which on-site construction or installation of emission control equipment or process modification is to be completed.

```
Dup 1-16      0 3 7
              17   19   53 54   55          60   61   MO/DY/YR    66   80
```

Date by which final compliance is to be achieved.

```
Dup 1-16      0 4 7
              17   19   53 54   55          60   61   MO/DY/YR    66   80
```

B. *Waiver of Emission Tests.* A waiver of emission testing may be granted to owners or operators of sources subject to emission testing if, in the judgment of the Administrator of the Environmental Protection Agency the emissions from the source comply with the appropriate standard or if the owners or operators of the source have requested a waiver of compliance or have been granted a waiver of compliance.

This application should accompany the report information provided in Section I.

1. *Reason*—State the reasons for requesting a waiver of emission testing. If the reason stated is that the emissions from the source are within the prescribed limits, documentation of this condition must be attached.

_____

_____

Date _____

Signature of the owner or operator _____

(Sec. 114, of the Clean Air Act as amended (42 U.S.C. 7414))

[40 FR 48303, Oct. 14, 1975, as amended at 43 FR 8800, Mar. 3, 1978; 50 FR 46295, Sept. 9, 1985]

APPENDIX B TO PART 61—TEST METHODS

Method 101—Determination of particulate and gaseous mercury emissions from chlor-alkali plants (air streams)

Method 101A—Determination of particulate and gaseous mercury emissions from sewage sludge incinerators
Method 102—Determination of particulate and gaseous mercury emissions from chlor-alkali plants (hydrogen streams)
Method 103—Beryllium screening method
Method 104—Determination of beryllium emissions from stationary sources
Method 105—Determination of mercury in wastewater treatment plant sewage sludges
Method 106—Determination of vinyl chloride emissions from stationary sources
Method 107—Determination of vinyl chloride content of in-process wastewater samples, and vinyl chloride content of polyvinyl chloride resin slurry, wet cake, and latex samples
Method 107A—Determination of vinyl chloride content of solvents, resin-solvent solution, polyvinyl chloride resin, resin slurry, wet resin, and latex samples
Method 108—Determination of particulate and gaseous arsenic emissions
Method 108A—Determination of arsenic content in ore samples from nonferrous smelters
Method 108B—Determination of arsenic content in ore samples from nonferrous smelters
Method 108C—Determination of arsenic content in ore samples from nonferrous smelters (molybdenum blue photometric procedure)
Method 111—Determination of Polonium—210 emissions from stationary sources

METHOD 101—DETERMINATION OF PARTICULATE AND GASEOUS MERCURY EMISSIONS FROM CHLOR-ALKALI PLANTS (AIR STREAMS)

NOTE: This method does not include all of the specifications (*e.g.*, equipment and supplies) and procedures (*e.g.*, sampling and analytical) essential to its performance. Some material is incorporated by reference from methods in appendix A to 40 CFR part 60. Therefore, to obtain reliable results, persons using this method should have a thorough knowledge of at least the following additional test methods: Method 1, Method 2, Method 3, and Method 5.

1.0 Scope and Application

1.1 Analytes.

Analyte	CAS No.	Sensitivity
Mercury (Hg)	7439–97–6	Dependent upon recorder and spectrophotometer.

1.2 Applicability. This method is applicable for the determination of Hg emissions, including both particulate and gaseous Hg, from chlor-alkali plants and other sources (as specified in the regulations) where the carrier-gas stream in the duct or stack is principally air.

1.3 Data Quality Objectives. Adherence to the requirements of this method will enhance the quality of the data obtained from air pollutant sampling methods.

2.0 Summary of Method

Particulate and gaseous Hg emissions are withdrawn isokinetically from the source and collected in acidic iodine monochloride (ICl) solution. The Hg collected (in the mercuric form) is reduced to elemental Hg, which is then aerated from the solution into an optical cell and measured by atomic absorption spectrophotometry.

3.0 Definitions [Reserved]

4.0 Interferences

4.1 Sample Collection. Sulfur dioxide (SO_2) reduces ICl and causes premature depletion of the ICl solution.

4.2 Sample Analysis.

4.2.1 ICl concentrations greater than 10^{-4} molar inhibit the reduction of the Hg (II) ion in the aeration cell.

4.2.2 Condensation of water vapor on the optical cell windows causes a positive interference.

5.0 Safety

5.1 Disclaimer. This method may involve hazardous materials, operations, and equipment. This test method does not purport to address all of the safety problems associated with its use. It is the responsibility of the user of this test method to establish appropriate safety and health practices and determine the applicability of regulatory limitations prior to performing this test method.

5.2 Corrosive Reagents. The following reagents are hazardous. Personal protective equipment and safe procedures are useful in preventing chemical splashes. If contact occurs, immediately flush with copious amounts of water for at least 15 minutes. Remove clothing under shower and decontaminate. Treat residual chemical burn as thermal burn.

5.2.1 Hydrochloric Acid (HCl). Highly toxic and corrosive. Causes severe damage to tissues. Vapors are highly irritating to eyes, skin, nose, and lungs, causing severe damage. May cause bronchitis, pneumonia, or

edema of lungs. Exposure to concentrations of 0.13 to 0.2 percent can be lethal to humans in a few minutes. Provide ventilation to limit exposure. Reacts with metals, producing hydrogen gas.

5.2.2 Nitric Acid (HNO_3). Highly corrosive to eyes, skin, nose, and lungs. Vapors cause bronchitis, pneumonia, or edema of lungs. Reaction to inhalation may be delayed as long as 30 hours and still be fatal. Provide ventilation to limit exposure. Strong oxidizer. Hazardous reaction may occur with organic materials such as solvents.

5.2.3 Sulfuric Acid (H_2SO_4). Rapidly destructive to body tissue. Will cause third degree burns. Eye damage may result in blindness. Inhalation may be fatal from spasm of the larynx, usually within 30 minutes. 3 mg/m^3 will cause lung damage. 1 mg/m^3 for 8 hours will cause lung damage or, in higher concentrations, death. Provide ventilation to limit inhalation. Reacts violently with metals and organics.

6.0 Equipment and Supplies.

6.1 Sample Collection. A schematic of the sampling train used in performing this method is shown in Figure 101–1; it is similar to the Method 5 sampling train. The following items are required for sample collection:

6.1.1 Probe Nozzle, Pitot Tube, Differential Pressure Gauge, Metering System, Barometer, and Gas Density Determination Equipment. Same as Method 5, Sections 6.1.1.1, 6.1.1.3, 6.1.1.4, 6.1.1.9, 6.1.2, and 6.1.3, respectively.

6.1.2 Probe Liner. Borosilicate or quartz glass tubing. A heating system capable of maintaining a gas temperature of 120 ± 14 °C (248 ± 25 °F) at the probe exit during sampling may be used to prevent water condensation.

NOTE: Do not use metal probe liners.

6.1.3 Impingers. Four Greenburg-Smith impingers connected in series with leak-free ground glass fittings or any similar leak-free noncontaminating fittings. For the first, third, and fourth impingers, impingers that are modified by replacing the tip with a 13-mm ID (0.5-in.) glass tube extending to 13 mm (0.5 in.) from the bottom of the flask may be used.

6.1.4 Acid Trap. Mine Safety Appliances air line filter, Catalog number 81857, with acid absorbing cartridge and suitable connections, or equivalent.

6.2 Sample Recovery. The following items are needed for sample recovery:

6.2.1 Glass Sample Bottles. Leakless, with Teflon-lined caps, 1000- and 100-ml.

6.2.2 Graduated Cylinder. 250-ml.

6.2.3 Funnel and Rubber Policeman. To aid in transfer of silica gel to container; not necessary if silica gel is weighed in the field.

6.2.4 Funnel. Glass, to aid in sample recovery.

6.3 Sample Preparation and Analysis. The following items are needed for sample preparation and analysis:

6.3.1 Atomic Absorption Spectrophotometer. Perkin-Elmer 303, or equivalent, containing a hollow-cathode mercury lamp and the optical cell described in Section 6.3.2.

6.3.2 Optical Cell. Cylindrical shape with quartz end windows and having the dimensions shown in Figure 101–2. Wind the cell with approximately 2 meters (6 ft) of 24-gauge Nichrome wire, or equivalent, and wrap with fiberglass insulation tape, or equivalent; do not let the wires touch each other.

6.3.3 Aeration Cell. Constructed according to the specifications in Figure 101–3. Do not use a glass frit as a substitute for the blown glass bubbler tip shown in Figure 101–3.

6.3.4 Recorder. Matched to output of the spectrophotometer described in Section 6.3.1.

6.3.5 Variable Transformer. To vary the voltage on the optical cell from 0 to 40 volts.

6.3.6 Hood. For venting optical cell exhaust.

6.3.7 Flow Metering Valve.

6.3.8 Rate Meter. Rotameter, or equivalent, capable of measuring to within 2 percent a gas flow of 1.5 liters/min (0.053 cfm).

6.3.9 Aeration Gas Cylinder. Nitrogen or dry, Hg-free air, equipped with a single-stage regulator.

6.3.10 Tubing. For making connections. Use glass tubing (ungreased ball and socket connections are recommended) for all tubing connections between the solution cell and the optical cell; do not use Tygon tubing, other types of flexible tubing, or metal tubing as substitutes. Teflon, steel, or copper tubing may be used between the nitrogen tank and flow metering valve (Section 6.3.7), and Tygon, gum, or rubber tubing between the flow metering valve and the aeration cell.

6.3.11 Flow Rate Calibration Equipment. Bubble flow meter or wet-test meter for measuring a gas flow rate of 1.5 ± 0.1 liters/min (0.053 ± 0.0035 cfm).

6.3.12 Volumetric Flasks. Class A with penny head standard taper stoppers; 100-, 250-, 500-, and 1000-ml.

6.3.13 Volumetric Pipets. Class A; 1-, 2-, 3-, 4-, and 5-ml.

6.3.14 Graduated Cylinder. 50-ml.

6.3.15 Magnetic Stirrer. General-purpose laboratory type.

6.3.16 Magnetic Stirring Bar. Teflon-coated.

6.3.17 Balance. Capable of weighing to ± 0.5 g.

6.3.18 Alternative Analytical Apparatus. Alternative systems are allowable as long as they meet the following criteria:

6.3.18.1 A linear calibration curve is generated and two consecutive samples of the same aliquot size and concentration agree within 3 percent of their average.

6.3.18.2 A minimum of 95 percent of the spike is recovered when an aliquot of a source sample is spiked with a known concentration of Hg (II) compound.

6.3.18.3 The reducing agent should be added after the aeration cell is closed.

6.3.18.4 The aeration bottle bubbler should not contain a frit.

6.3.18.5 Any Tygon tubing used should be as short as possible and conditioned prior to use until blanks and standards yield linear and reproducible results.

6.3.18.6 If manual stirring is done before aeration, it should be done with the aeration cell closed.

6.3.18.7 A drying tube should not be used unless it is conditioned as the Tygon tubing above.

7.0 Reagents and Standards

Unless otherwise indicated, all reagents must conform to the specifications established by the Committee on Analytical Reagents of the American Chemical Society; where such specifications are not available, use the best available grade.

7.1 Sample Collection. The following reagents are required for sample collection:

7.1.1 Water. Deionized distilled, to conform to ASTM D 1193–77 or 91 (incorporated by reference—see §61.18), Type 1. If high concentrations of organic matter are not expected to be present, the analyst may eliminate the $KMnO_4$ test for oxidizable organic matter. Use this water in all dilutions and solution preparations.

7.1.2 Nitric Acid, 50 Percent (v/v). Mix equal volumes of concentrated HNO_3 and water, being careful to add the acid to the water slowly.

7.1.3 Silica Gel. Indicating type, 6- to 16-mesh. If previously used, dry at 175 °C (350 °F) for 2 hours. The tester may use new silica gel as received.

7.1.4 Potassium Iodide (KI) Solution, 25 Percent. Dissolve 250 g of KI in water, and dilute to 1 liter.

7.1.5 Iodine Monochloride Stock Solution, 1.0 M. To 800 ml of 25 percent KI solution, add 800 ml of concentrated HCl. Cool to room temperature. With vigorous stirring, slowly add 135 g of potassium iodate (KIO_3), and stir until all free iodine has dissolved. A clear orange-red solution occurs when all the KIO_3 has been added. Cool to room temperature, and dilute to 1800 ml with water. Keep the solution in amber glass bottles to prevent degradation.

7.1.6 Absorbing Solution, 0.1 M ICl. Dilute 100 ml of the 1.0 M ICl stock solution to 1 liter with water. Keep the solution in amber glass bottles and in darkness to prevent degradation. This reagent is stable for at least two months.

7.2 Sample Preparation and Analysis. The following reagents and standards are required for sample preparation and analysis:

7.2.1 Reagents.

7.2.1.1 Tin (II) Solution. Prepare fresh daily, and keep sealed when not being used. Completely dissolve 20 g of tin (II) chloride (or 25 g of tin (II) sulfate) crystals (Baker Analyzed reagent grade or any other brand that will give a clear solution) in 25 ml of concentrated HCl. Dilute to 250 ml with water. Do not substitute HNO_3, H_2SO_4, or other strong acids for the HCl.

7.2.1.2 Sulfuric Acid, 5 Percent (v/v). Dilute 25 ml of concentrated H_2SO_4 to 500 ml with water.

7.2.2 Standards

7.2.2.1 Hg Stock Solution, 1 mg Hg/ml. Prepare and store all Hg standard solutions in borosilicate glass containers. Completely dissolve 0.1354 g of Hg (II) chloride in 75 ml of water in a 100-ml glass volumetric flask. Add 10 ml of concentrated HNO_3, and adjust the volume to exactly 100 ml with water. Mix thoroughly. This solution is stable for at least one month.

7.2.2.2 Intermediate Hg Standard Solution, 10 µg Hg/ml. Prepare fresh weekly. Pipet 5.0 ml of the Hg stock solution (Section 7.2.2.1) into a 500-ml glass volumetric flask, and add 20 ml of the 5 percent H_2SO_4 solution. Dilute to exactly 500 ml with water. Thoroughly mix the solution.

7.2.2.3 Working Hg Standard Solution, 200 ng Hg/ml. Prepare fresh daily. Pipet 5.0 ml of the intermediate Hg standard solution (Section 7.2.2.2) into a 250-ml volumetric glass flask. Add 10 ml of the 5 percent H_2SO_4 and 2 ml of the 0.1 M ICl absorbing solution taken as a blank (Section 8.7.4.3), and dilute to 250 ml with water. Mix thoroughly.

8.0 Sample Collection, Preservation, Transport, and Storage

Because of the complexity of this method, testers should be trained and experienced with the test procedures to ensure reliable results. Since the amount of Hg that is collected generally is small, the method must be carefully applied to prevent contamination or loss of sample.

8.1 Pretest Preparation. Follow the general procedure outlined in Method 5, Section 8.1, except omit Sections 8.1.2 and 8.1.3.

8.2 Preliminary Determinations. Follow the general procedure outlined in Method 5, Section 8.2, with the exception of the following:

8.2.1 Select a nozzle size based on the range of velocity heads to assure that it is not necessary to change the nozzle size in order to maintain isokinetic sampling rates below 28 liters/min (1.0 cfm).

8.2.2 Perform test runs such that samples are obtained over a period or periods that accurately determine the maximum emissions that occur in a 24-hour period. In the case of cyclic operations, run sufficient tests for the accurate determination of the emissions that

occur over the duration of the cycle. A minimum sample time of 2 hours is recommended. In some instances, high Hg or high SO_2 concentrations make it impossible to sample for the desired minimum time. This is indicated by reddening (liberation of free iodine) in the first impinger. In these cases, the sample run may be divided into two or more subruns to ensure that the absorbing solution is not depleted.

8.3 Preparation of Sampling Train.

8.3.1 Clean all glassware (probe, impingers, and connectors) by rinsing with 50 percent HNO_3, tap water, 0.1 M ICl, tap water, and finally deionized distilled water. Place 100 ml of 0.1 M ICl in each of the first three impingers. Take care to prevent the absorbing solution from contacting any greased surfaces. Place approximately 200 g of preweighed silica gel in the fourth impinger. More silica gel may be used, but care should be taken to ensure that it is not entrained and carried out from the impinger during sampling. Place the silica gel container in a clean place for later use in the sample recovery. Alternatively, determine and record the weight of the silica gel plus impinger to the nearest 0.5 g.

8.3.2 Install the selected nozzle using a Viton A O-ring when stack temperatures are less than 260 °C (500 °F). Use a fiberglass string gasket if temperatures are higher. See APTD–0576 (Reference 3 in Method 5) for details. Other connecting systems using either 316 stainless steel or Teflon ferrules may be used. Mark the probe with heat-resistant tape or by some other method to denote the proper distance into the stack or duct for each sampling point.

8.3.3 Assemble the train as shown in Figure 101–1, using (if necessary) a very light coat of silicone grease on all ground glass joints. Grease only the outer portion (see APTD–0576) to avoid the possibility of contamination by the silicone grease.

NOTE: An empty impinger may be inserted between the third impinger and the silica gel to remove excess moisture from the sample stream.

8.3.4 After the sampling train has been assembled, turn on and set the probe heating system, if applicable, at the desired operating temperature. Allow time for the temperatures to stabilize. Place crushed ice around the impingers.

8.4 Leak-Check Procedures. Follow the leak-check procedures outlined in Method 5, Section 8.4.

8.5 Sampling Train Operation. Follow the general procedure outlined in Method 5, Section 8.5. For each run, record the data required on a data sheet such as the one shown in Figure 101–4.

8.6 Calculation of Percent Isokinetic. Same as Method 5, Section 8.6.

8.7 Sample Recovery. Begin proper cleanup procedure as soon as the probe is removed from the stack at the end of the sampling period.

8.7.1 Allow the probe to cool. When it can be safely handled, wipe off any external particulate matter near the tip of the probe nozzle, and place a cap over it. Do not cap off the probe tip tightly while the sampling train is cooling. Capping would create a vacuum and draw liquid out from the impingers.

8.7.2 Before moving the sampling train to the cleanup site, remove the probe from the train, wipe off the silicone grease, and cap the open outlet of the probe. Be careful not to lose any condensate that might be present. Wipe off the silicone grease from the impinger. Use either ground-glass stoppers, plastic caps, or serum caps to close these openings.

8.7.3 Transfer the probe and impinger assembly to a cleanup area that is clean, protected from the wind, and free of Hg contamination. The ambient air in laboratories located in the immediate vicinity of Hg-using facilities is not normally free of Hg contamination.

8.7.4 Inspect the train before and during disassembly, and note any abnormal conditions. Treat the samples as follows.

8.7.4.1 Container No. 1 (Impingers and Probe).

8.7.4.1.1 Using a graduated cylinder, measure the liquid in the first three impingers to within 1 ml. Record the volume of liquid present (*e.g.*, see Figure 5–6 of Method 5). This information is needed to calculate the moisture content of the effluent gas. (Use only glass storage bottles and graduated cylinders that have been precleaned as in Section 8.3.1) Place the contents of the first three impingers into a 1000-ml glass sample bottle.

8.7.4.1.2 Taking care that dust on the outside of the probe or other exterior surfaces does not get into the sample, quantitatively recover the Hg (and any condensate) from the probe nozzle, probe fitting, and probe liner as follows: Rinse these components with two 50-ml portions of 0.1 M ICl. Next, rinse the probe nozzle, fitting and liner, and each piece of connecting glassware between the probe liner and the back half of the third impinger with a maximum of 400 ml of water. Add all washings to the 1000-ml glass sample bottle containing the liquid from the first three impingers.

8.7.4.1.3 After all washings have been collected in the sample container, tighten the lid on the container to prevent leakage during shipment to the laboratory. Mark the height of the liquid to determine later whether leakage occurred during transport. Label the container to identify clearly its contents.

8.7.4.2 Container No. 2 (Silica Gel). Same as Method 5, Section 8.7.6.3.

8.7.4.3 Container No. 3 (Absorbing Solution Blank). Place 50 ml of the 0.1 M ICl absorbing solution in a 100-ml sample bottle. Seal the container. Use this blank to prepare the working Hg standard solution (Section 7.2.2.3).

9.0 Quality Control

9.1 Miscellaneous Quality Control Measures.

Section	Quality control measure	Effect
8.4 10.2	Sampling equipment leak-checks and calibration.	Ensure accuracy and precision of sampling measurements.
10.5, 10.6	Spectrophotometer calibration	Ensure linearity of spectrophotometer response to standards.
11.3.3	Check for matrix effects	Eliminate matrix effects.

9.2 Volume Metering System Checks. Same as Method 5, Section 9.2.

10.0 Calibration and Standardizations

NOTE: Maintain a laboratory log of all calibrations.

10.1 Before use, clean all glassware, both new and used, as follows: brush with soap and tap water, liberally rinse with tap water, soak for 1 hour in 50 percent HNO_3, and then rinse with deionized distilled water.

10.2 Sampling Equipment. Calibrate the sampling equipment according to the procedures outlined in the following sections of Method 5: Section 10.1 (Probe Nozzle), Section 10.2 (Pitot Tube Assembly), Section 10.3 (Metering System), Section 10.5 (Temperature Sensors), Section 10.6 (Barometer).

10.3 Aeration System Flow Rate Meter. Assemble the aeration system as shown in Figure 101–5. Set the outlet pressure on the aeration gas cylinder regulator to a minimum pressure of 500 mm Hg (10 psi), and use the flow metering valve and a bubble flowmeter or wet-test meter to obtain a flow rate of 1.5 ± 0.1 liters/min (0.053 ± 0.0035 cfm) through the aeration cell. After the calibration of the aeration system flow rate meter is complete, remove the bubble flowmeter from the system.

10.4 Optical Cell Heating System. Using a 50-ml graduated cylinder, add 50 ml of water to the bottle section of the aeration cell, and attach the bottle section to the bubbler section of the cell. Attach the aeration cell to the optical cell and while aerating at 1.5 ± 0.1 liters/min (0.053 ± 0.0035 cfm), determine the minimum variable transformer setting necessary to prevent condensation of moisture in the optical cell and in the connecting tubing. (This setting should not exceed 20 volts.)

10.5 Spectrophotometer and Recorder.

10.5.1 The Hg response may be measured by either peak height or peak area.

NOTE: The temperature of the solution affects the rate at which elemental Hg is released from a solution and, consequently, it affects the shape of the absorption curve (area) and the point of maximum absorbance (peak height). Therefore, to obtain reproducible results, bring all solutions to room temperature before use.

10.5.2 Set the spectrophotometer wavelength at 253.7 nm, and make certain the optical cell is at the minimum temperature that will prevent water condensation. Then set the recorder scale as follows: Using a 50-ml graduated cylinder, add 50 ml of water to the aeration cell bottle. Add three drops of Antifoam B to the bottle, and then pipet 5.0 ml of the working Hg standard solution into the aeration cell.

NOTE: Always add the Hg-containing solution to the aeration cell after the 50 ml of water.

10.5.3 Place a Teflon-coated stirring bar in the bottle. Before attaching the bottle section to the bubbler section of the aeration cell, make certain that (1) the aeration cell exit arm stopcock (Figure 101–3) is closed (so that Hg will not prematurely enter the optical cell when the reducing agent is being added) and (2) there is no flow through the bubbler. If conditions (1) and (2) are met, attach the bottle section to the bubbler section of the aeration cell. Pipet 5 ml of tin (II) reducing solution into the aeration cell through the side arm, and immediately stopper the side arm. Stir the solution for 15 seconds, turn on the recorder, open the aeration cell exit arm stopcock, and immediately initiate aeration with continued stirring. Determine the maximum absorbance of the standard, and set this value to read 90 percent of the recorder full scale.

10.6 Calibration Curve.

10.6.1 After setting the recorder scale, repeat the procedure in Section 10.5 using 0.0-, 1.0-, 2.0-, 3.0-, 4.0-, and 5.0-ml aliquots of the working standard solution (final amount of Hg in the aeration cell is 0, 200, 400, 600, 800, and 1000 ng, respectively). Repeat this procedure on each aliquot size until two consecutive peaks agree within 3 percent of their average value.

NOTE: To prevent Hg carryover from one sample to another, do not close the aeration cell from the optical cell until the recorder pen has returned to the baseline.)

10.6.2 It should not be necessary to disconnect the aeration gas inlet line from the

aeration cell when changing samples. After separating the bottle and bubbler sections of the aeration cell, place the bubbler section into a 600-ml beaker containing approximately 400 ml of water. Rinse the bottle section of the aeration cell with a stream of water to remove all traces of the tin (II) reducing agent. Also, to prevent the loss of Hg before aeration, remove all traces of the reducing agent between samples by washing with water. It will be necessary, however, to wash the aeration cell parts with concentrated HCl if any of the following conditions occur: (1) A white film appears on any inside surface of the aeration cell, (2) the calibration curve changes suddenly, or (3) the replicate samples do not yield reproducible results.

10.6.3 Subtract the average peak height (or peak area) of the blank (0.0-ml aliquot)—which must be less than 2 percent of recorder full scale—from the averaged peak heights of the 1.0-, 2.0-, 3.0-, 4.0-, and 5.0-ml aliquot standards. If the blank absorbance is greater than 2 percent of full-scale, the probable cause is Hg contamination of a reagent or carry-over of Hg from a previous sample. Prepare the calibration curve by plotting the corrected peak height of each standard solution versus the corresponding final total Hg weight in the aeration cell (in ng), and draw the best fit straight line. This line should either pass through the origin or pass through a point no further from the origin than ± 2 percent of the recorder full scale. If the line does not pass through or very near to the origin, check for nonlinearity of the curve and for incorrectly prepared standards.

11.0 Analytical Procedure

11.1 Sample Loss Check. Check the liquid level in each container to see whether liquid was lost during transport. If a noticeable amount of leakage occurred, either void the sample or use methods subject to the approval of the Administrator to account for the losses.

11.2 Sample Preparation. Treat each sample as follows:

11.2.1 Container No. 1 (Impingers and Probe). Carefully transfer the contents of Container No. 1 into a 1000-ml volumetric flask, and adjust the volume to exactly 1000 ml with water.

11.2.2 Dilutions. Pipet a 2-ml aliquot from the diluted sample from Section 11.2.1 into a 250-ml volumetric flask. Add 10 ml of 5 percent H_2SO_4, and adjust the volume to exactly 250 ml with water. This solution is stable for at least 72 hours.

NOTE: The dilution factor will be 250/2 for this solution.

11.3 Analysis. Calibrate the analytical equipment and develop a calibration curve as outlined in Sections 10.3 through 10.6.

11.3.1 Mercury Samples. Repeat the procedure used to establish the calibration curve with an appropriately sized aliquot (1 to 5 ml) of the diluted sample (from Section 11.2.2) until two consecutive peak heights agree within 3 percent of their average value. The peak maximum of an aliquot (except the 5-ml aliquot) must be greater than 10 percent of the recorder full scale. If the peak maximum of a 1.0-ml aliquot is off scale on the recorder, further dilute the original source sample to bring the Hg concentration into the calibration range of the spectrophotometer.

11.3.2 Run a blank and standard at least after every five samples to check the spectrophotometer calibration. The peak height of the blank must pass through a point no further from the origin than ±2 percent of the recorder full scale. The difference between the measured concentration of the standard (the product of the corrected peak height and the reciprocal of the least squares slope) and the actual concentration of the standard must be less than 7 percent, or recalibration of the analyzer is required.

11.3.3 Check for Matrix Effects (optional). Use the Method of Standard Additions as follows to check at least one sample from each source for matrix effects on the Hg results. The Method of Standard Additions procedures described on pages 9–4 and 9–5 of the section entitled ''General Information'' of the Perkin Elmer Corporation Atomic Absorption Spectrophotometry Manual, Number 303–0152 (Reference 16 in Section 16.0) are recommended. If the results of the Method of Standard Additions procedure used on the single source sample do not agree to within ±5 percent of the value obtained by the routine atomic absorption analysis, then reanalyze all samples from the source using the Method of Standard Additions procedure.

11.4 Container No. 2 (Silica Gel). Weigh the spent silica gel (or silica gel plus impinger) to the nearest 0.5 g using a balance. (This step may be conducted in the field.)

12.0 Data Analysis and Calculations

Carry out calculations, retaining at least one extra decimal significant figure beyond that of the acquired data. Round off figures only after the final calculation. Other forms of the equations may be used as long as they give equivalent results.

12.1 Average Dry Gas Meter Temperature and Average Orifice Pressure Drop, Dry Gas Volume, Volume of Water Vapor Condensed, Moisture Content, and Isokinetic Variation. Same as Method 5, Sections 12.2 through 12.5 and 12.11, respectively.

12.2 Stack Gas Velocity. Using the data from this test and Equation 2–9 of Method 2, calculate the average stack gas velocity v_s.

12.3 Total Mercury.

12.3.1 For each source sample, correct the average maximum absorbance of the two

consecutive samples whose peak heights agree within 3 percent of their average for the contribution of the solution blank (see Section 10.6.3). Use the calibration curve and these corrected averages to determine the final total weight of Hg in ng in the aeration cell for each source sample.

12.3.2 Correct for any dilutions made to bring the sample into the working range of the spectrophotometer. Then calculate the Hg in the original solution, m_{Hg}, as follows:

$$m_{Hg} = \left[C_{Hg(AC)}(DF)(V_f)(10^{-3})\right]/S \qquad \text{Eq. 101-1}$$

Where:

$C_{Hg(AC)}$ = Total ng of Hg in aliquot analyzed (reagent blank subtracted).

DF = Dilution factor for the Hg-containing solution (before adding to the aeration cell; *e.g.*, DF = 250/2 if the source samples were diluted as described in Section 11.2.2).

V_f = Solution volume of original sample, 1000 ml for samples diluted as described in Section 11.2.1.

10^{-3} = Conversion factor, µg/ng.

S = Aliquot volume added to aeration cell, ml.

12.4 Mercury Emission Rate. Calculate the daily Hg emission rate, R, using Equation 101–2. For continuous operations, the operating time is equal to 86,400 seconds per day. For cyclic operations, use only the time per day each stack is in operation. The total Hg emission rate from a source will be the summation of results from all stacks.

$$R = \frac{Km_{Hg}V_sA_s\left(86{,}400 \times 10^{-6}\right)}{\left[V_{m(std)} + V_{w(std)}\right]\left(T_s/P_s\right)} \qquad \text{Eq. 101-2}$$

Where:

K_1 = 0.3858 °K/mm Hg for metric units.

K_1 = 17.64 °R/in. Hg for English units.

K_3 = 10^{-6} g/µg for metric units.

= 2.2046 ‘‘ $\times 10^{-9}$ lb/µg for English units.

P_s = Absolute stack gas pressure, mm Hg (in. Hg).

t = Daily operating time, sec/day.

T_s = Absolute average stack gas temperature, °K (°R).

$V_{m(std)}$ = Dry gas sample volume at standard conditions, scm (scf).

$V_{w(std)}$ = Volume of water vapor at standard conditions, scm (scf).

12.5 Determination of Compliance. Each performance test consists of three repetitions of the applicable test method. For the purpose of determining compliance with an applicable national emission standard, use the average of the results of all repetitions.

13.0 Method Performance

The following estimates are based on collaborative tests, wherein 13 laboratories performed duplicate analyses on two Hg-containing samples from a chlor-alkali plant and on one laboratory-prepared sample of known Hg concentration. The sample concentrations ranged from 2 to 65 µg Hg/ml.

13.1 Precision. The estimated intra-laboratory and inter-laboratory standard deviations are 1.6 and 1.8 µg Hg/ml, respectively.

13.2 Accuracy. The participating laboratories that analyzed a 64.3 µg Hg/ml (in 0.1 M ICl) standard obtained a mean of 63.7 µg Hg/ml.

13.3 Analytical Range. After initial dilution, the range of this method is 0.5 to 120 µg Hg/ml. The upper limit can be extended by further dilution of the sample.

14.0 Pollution Prevention. [Reserved]

15.0 Waste Management. [Reserved]

16.0 References

Same as Method 5, Section 17.0, References 1–3, 5, and 6, with the addition of the following:

1. Determining Dust Concentration in a Gas Stream. ASME Performance Test Code No. 27. New York, NY. 1957.

2. DeVorkin, Howard, *et al.* Air Pollution Source Testing Manual. Air Pollution Control District. Los Angeles, CA. November 1963.

3. Hatch, W.R., and W.I. Ott. Determination of Sub-Microgram Quantities of Mercury by Atomic Absorption Spectrophotometry. Anal. Chem. 40:2085–87. 1968.

4. Mark, L.S. Mechanical Engineers' Handbook. McGraw-Hill Book Co., Inc. New York, NY. 1951.

5. Western Precipitation Division of Joy Manufacturing Co. Methods for Determination of Velocity, Volume, Dust and Mist Content of Gases. Bulletin WP–50. Los Angeles, CA. 1968.

6. Perry, J.H. Chemical Engineers' Handbook. McGraw-Hill Book Co., Inc. New York, NY. 1960.

7. Shigehara, R.T., W.F. Todd, and W.S. Smith. Significance of Errors in Stack Sampling Measurements. Stack Sampling News. *1*(3):6–18. September 1973.

8. Smith, W.S., R.T. Shigehara, and W.F. Todd. A Method of Interpreting Stack Sampling Data. Stack Sampling News. *1*(2):8–17. August 1973.

9. Standard Method for Sampling Stacks for Particulate Matter. In: 1971 Annual Book of ASTM Standards, Part 23. ASTM Designation D 2928–71. Philadelphia, PA 1971.

10. Vennard, J.K. Elementary Fluid Mechanics. John Wiley and Sons, Inc. New York. 1947.

11. Mitchell, W.J. and M.R. Midgett. Improved Procedure for Determining Mercury Emissions from Mercury Cell Chlor-Alkali Plants. J. APCA. *26*:674–677. July 1976.

12. Shigehara, R.T. Adjustments in the EPA Nomograph for Different Pitot Tube Coefficients and Dry Molecular Weights. Stack Sampling News. *2*:4–11. October 1974.

13. Vollaro, R.F. Recommended Procedure for Sample Traverses in Ducts Smaller than 12 Inches in Diameter. U.S. Environmental Protection Agency, Emission Measurement Branch. Research Triangle Park, NC. November 1976.

14. Klein, R. and C. Hach. Standard Additions: Uses and Limitation in Spectrophotometric Measurements. Amer. Lab. *9*:21. 1977.

15. Perkin Elmer Corporation. Analytical Methods for Atomic Absorption Spectrophotometry. Norwalk, Connecticut. September 1976.

17.0 Tables, Diagrams, Flowcharts, and Validation Data

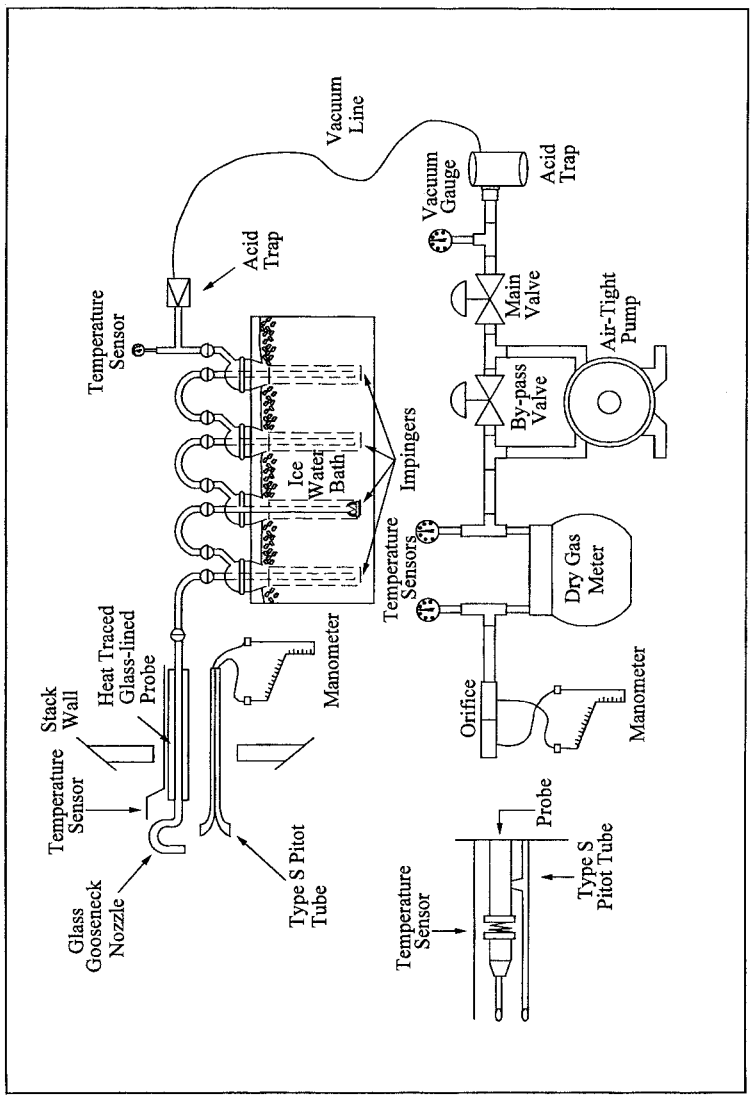

Figure 101-1. Mercury Sampling Train.

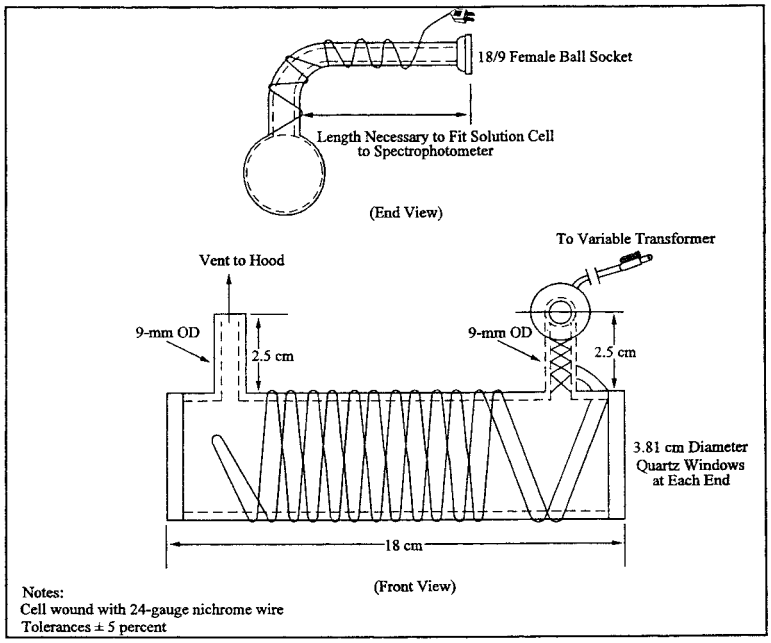

Figure 101-2. Optical Cell.

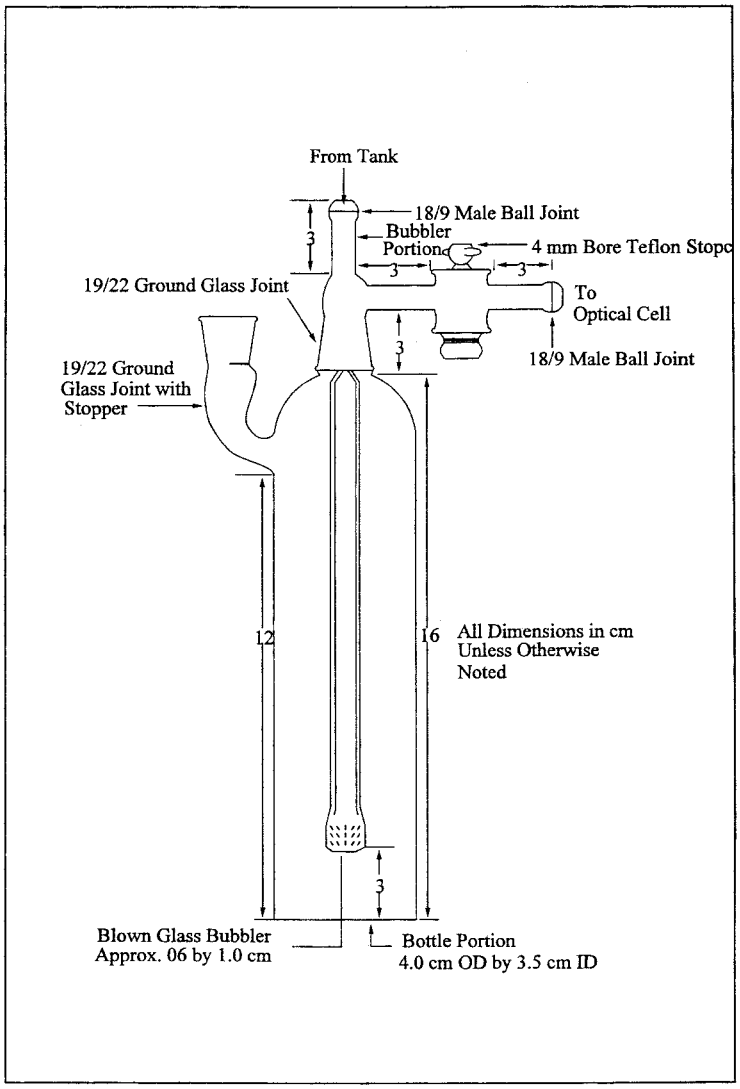

Figure 101-3. Aeration Cell.

Plant _____
Location _____
Operator _____
Date _____
Run No. _____
Sample box No. _____
Filter box No. _____
Meter H@ _____
C factor _____
Pitot tube coefficient, C_p _____

SCHEMATIC OF STACK CROSS SECTION

Ambient temperature _____
Barometric pressure _____
Assumed moisture, % _____
Probe length, (ft.) _____
Nozzle identification No. _____
Average calibrated nozzle diameter, (in.) _____
Probe heater setting _____
Leak rate, (cfm) _____
Probe liner material _____
Static pressure, (in. Hg) _____
Filter No. _____

Traverse point number	Sampling time	Vacuum	Stack temperature	Velocity head	Pressure differential across orifice meter	Gas meter reading	Gas sample temperature at dry gas meter		Filter holder* temperature	Temperature of gas leaving condenser or last impinger
							Inlet	Outlet		
	min.	(in.Hg)	(T_s) (°F)	(ΔP_s) (in. H_2O)	(in. H_2O)	(ft^3)	(°F)	(°F)	(°F)	(°F)
Total							Avg.	Avg.		
Average							Avg.			

* If Applicable

Figure 101-4. Mercury Field Data.

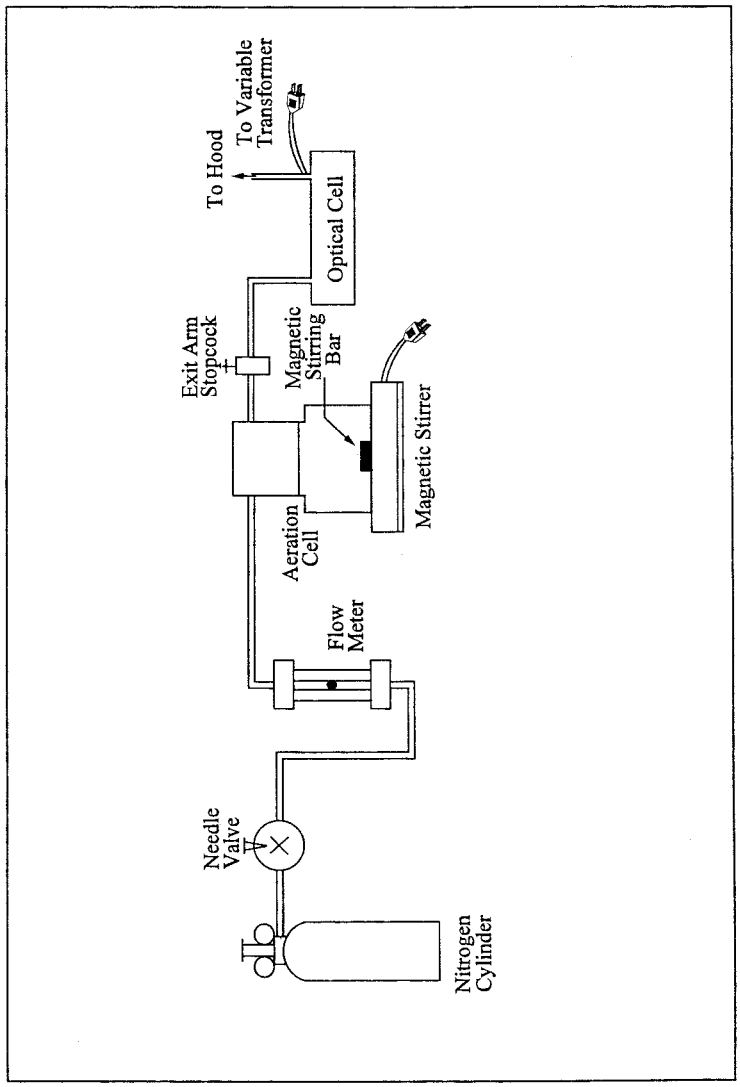

Figure 101-5. Schematic of Aeration System.

METHOD 101A—DETERMINATION OF PARTICULATE AND GASEOUS MERCURY EMISSIONS FROM SEWAGE SLUDGE INCINERATORS

NOTE: This method does not include all of the specifications (*e.g.*, equipment and supplies) and procedures (*e.g.*, sampling and analytical) essential to its performance. Some material is incorporated by reference from methods in appendix A to 40 CFR part 60 and in this part. Therefore, to obtain reliable results, persons using this method should also have a thorough knowledge of at least the following additional test methods: Methods 1, Method 2, Method 3, and Method 5 of part 60 (appendix A), and Method 101 part 61 (appendix B).

1.0 Scope and Application

1.1 Analytes.

Analyte	CAS No.	Sensitivity
Mercury (Hg)	7439–97–6	Dependent upon spectrophotometer and recorder.

1.2 Applicability. This method is applicable for the determination of Hg emissions from sewage sludge incinerators and other sources as specified in an applicable subpart of the regulations.

1.3 Data Quality Objectives. Adherence to the requirements of this method will enhance the quality of the data obtained from air pollutant sampling methods.

2.0 Summary of Method

2.1 Particulate and gaseous Hg emissions are withdrawn isokinetically from the source and are collected in acidic potassium permanganate ($KMnO_4$) solution. The Hg collected (in the mercuric form) is reduced to elemental Hg, which is then aerated from the solution into an optical cell and measured by atomic absorption spectrophotometry.

3.0 Definitions. [Reserved]

4.0 Interferences

4.1 Sample Collection. Excessive oxidizable organic matter in the stack gas prematurely depletes the $KMnO_4$ solution and thereby prevents further collection of Hg.

4.2 Analysis. Condensation of water vapor on the optical cell windows causes a positive interference.

5.0 Safety

5.1 Disclaimer. This method may involve hazardous materials, operations, and equipment. This test method may not address all of the safety problems associated with its use. It is the responsibility of the user of this test method to establish appropriate safety and health practices and determine the applicability of regulatory limitations prior to performing this test method.

5.2 Corrosive Reagents. The following reagents are hazardous. Personal protective equipment and safe procedures are useful in preventing chemical splashes. If contact occurs, immediately flush with copious amounts of water for at least 15 minutes. Remove clothing under shower and decontaminate. Treat residual chemical burns as thermal burns.

5.2.1 Hydrochloric Acid (HCl). Highly toxic. Vapors are highly irritating to eyes, skin, nose, and lungs, causing severe damage. May cause bronchitis, pneumonia, or edema of lungs. Exposure to concentrations of 0.13 to 0.2 percent can be lethal to humans in a few minutes. Provide ventilation to limit exposure. Reacts with metals, producing hydrogen gas.

5.2.2 Nitric Acid (HNO_3). Highly corrosive to eyes, skin, nose, and lungs. Vapors cause bronchitis, pneumonia, or edema of lungs. Reaction to inhalation may be delayed as long as 30 hours and still be fatal. Provide ventilation to limit exposure. Strong oxidizer. Hazardous reaction may occur with organic materials such as solvents.

5.2.3 Sulfuric acid (H_2SO_4). Rapidly destructive to body tissue. Will cause third degree burns. Eye damage may result in blindness. Inhalation may be fatal from spasm of the larynx, usually within 30 minutes. May cause lung tissue damage with edema. 3 mg/m^3 will cause lung damage in uninitiated. 1 mg/m^3 for 8 hours will cause lung damage or, in higher concentrations, death. Provide ventilation to limit inhalation. Reacts violently with metals and organics.

5.3 Chlorine Evolution. Hydrochloric acid reacts with $KMnO_4$ to liberate chlorine gas. Although this is a minimal concern when small quantities of HCl (5–10 ml) are used in the impinger rinse, a potential safety hazard may still exist. At sources that emit higher concentrations of oxidizable materials (*e.g.*, power plants), more HCl may be required to remove the larger amounts of brown deposit formed in the impingers. In such cases, the potential safety hazards due to sample container pressurization are greater, because of the larger volume of HCl rinse added to the recovered sample. These hazards are eliminated by storing and analyzing the HCl impinger wash separately from the permanganate impinger sample.

6.0 Equipment and Supplies

6.1 Sample Collection and Sample Recovery. Same as Method 101, Sections 6.1 and 6.2, respectively, with the following exceptions:

6.1.1 Probe Liner. Same as in Method 101, Section 6.1.2, except that if a filter is used ahead of the impingers, the probe heating system must be used to minimize the condensation of gaseous Hg.

6.1.2 Filter Holder (Optional). Borosilicate glass with a rigid stainless-steel wire-screen filter support (do not use glass frit supports) and a silicone rubber or Teflon gasket, designed to provide a positive seal against leakage from outside or around the filter. The filter holder must be equipped with a filter heating system capable of maintaining a temperature around the filter holder of 120 ± 14 °C (248 ± 25 °F) during sampling to minimize both water and gaseous Hg condensation. A filter may also be used in cases where the stream contains large quantities of particulate matter.

6.2 Sample Analysis. Same as Method 101, Section 6.3, with the following additions and exceptions:

6.2.1 Volumetric Pipets. Class A; 1-, 2-, 3-, 4-, 5-, 10-, and 20-ml.

6.2.2 Graduated Cylinder. 25-ml.

6.2.3 Steam Bath.

6.2.4 Atomic Absorption Spectrophotometer or Equivalent. Any atomic absorption unit with an open sample presentation area in which to mount the optical cell is suitable. Instrument settings recommended by the particular manufacturer should be followed. Instruments designed specifically for the measurement of mercury using the cold-vapor technique are commercially available and may be substituted for the atomic absorption spectrophotometer.

6.2.5 Optical Cell. Alternatively, a heat lamp mounted above the cell or a moisture trap installed upstream of the cell may be used.

6.2.6 Aeration Cell. Alternatively, aeration cells available with commercial cold vapor instrumentation may be used.

6.2.7 Aeration Gas Cylinder. Nitrogen, argon, or dry, Hg-free air, equipped with a single-stage regulator. Alternatively, aeration may be provided by a peristaltic metering pump. If a commercial cold vapor instrument is used, follow the manufacturer's recommendations.

7.0 Reagents and Standards

Unless otherwise indicated, it is intended that all reagents conform to the specifications established by the Committee on Analytical Reagents of the American Chemical Society, where such specifications are available; otherwise, use the best available grade.

7.1 Sample Collection and Recovery. The following reagents are required for sample collection and recovery:

7.1.1 Water. Deionized distilled, to conform to ASTM D 1193–77 or 91 Type 1. If high concentrations of organic matter are not expected to be present, the analyst may eliminate the $KMnO_4$ test for oxidizable organic matter. Use this water in all dilutions and solution preparations.

7.1.2 Nitric Acid, 50 Percent (V/V). Mix equal volumes of concentrated HNO_3 and water, being careful to add the acid to the water slowly.

7.1.3 Silica Gel. Indicating type, 6 to 16 mesh. If previously used, dry at 175 °C (350 °F) for 2 hours. New silica gel may be used as received.

7.1.4 Filter (Optional). Glass fiber filter, without organic binder, exhibiting at least 99.95 percent efficiency on 0.3-µm dioctyl phthalate smoke particles. The filter in cases where the gas stream contains large quantities of particulate matter, but blank filters should be analyzed for Hg content.

7.1.5 Sulfuric Acid, 10 Percent (V/V). Carefully add and mix 100 ml of concentrated H_2S_{O4} to 900 ml of water.

7.1.6 Absorbing Solution, 4 Percent $KMnO_4$ (W/V). Prepare fresh daily. Dissolve 40 g of $KMnO_4$ in sufficient 10 percent H_2SO_4 to make 1 liter. Prepare and store in glass bottles to prevent degradation.

7.1.7 Hydrochloric Acid, 8 N. Carefully add and mix 67 ml of concentrated HCl to 33 ml of water.

7.2 Sample Analysis. The following reagents and standards are required for sample analysis:

7.2.1 Water. Same as in Section 7.1.1.

7.2.2 Tin (II) Solution. Prepare fresh daily, and keep sealed when not being used. Completely dissolve 20 g of tin (II) chloride (or 25 g of tin (II) sulfate) crystals (Baker Analyzed reagent grade or any other brand that will give a clear solution) in 25 ml of concentrated HCl. Dilute to 250 ml with water. Do not substitute HNO_3, $H2SO_4$, or other strong acids for the HCl.

7.2.3 Sodium Chloride-Hydroxylamine Solution. Dissolve 12 g of sodium chloride and 12 g of hydroxylamine sulfate (or 12 g of hydroxylamine hydrochloride) in water and dilute to 100 ml.

7.2.4 Hydrochloric Acid, 8 N. Same as Section 7.1.7.

7.2.5 Nitric Acid, 15 Percent (V/V). Carefully add 15 ml HNO_3 to 85 ml of water.

7.2.6 Antifoam B Silicon Emulsion. J.T. Baker Company (or equivalent).

7.2.7 Mercury Stock Solution, 1 mg Hg/ml. Prepare and store all Hg standard solutions in borosilicate glass containers. Completely dissolve 0.1354 g of Hg (II) chloride in 75 ml of water. Add 10 ml of concentrated HNO_3, and adjust the volume to exactly 100 ml with water. Mix thoroughly. This solution is stable for at least one month.

7.2.8 Intermediate Hg Standard Solution, 10 µg/ml. Prepare fresh weekly. Pipet 5.0 ml of the Hg stock solution (Section 7.2.7) into a 500 ml volumetric flask, and add 20 ml of 15 percent HNO_3 solution. Adjust the volume to exactly 500 ml with water. Thoroughly mix the solution.

7.2.9 Working Hg Standard Solution, 200 ng Hg/ml. Prepare fresh daily. Pipet 5.0 ml from the ''Intermediate Hg Standard Solution'' (Section 7.2.8) into a 250-ml volumetric flask. Add 5 ml of 4 percent $KMnO_4$ absorbing solution and 5 ml of 15 percent HNO_3. Adjust the volume to exactly 250 ml with water. Mix thoroughly.

7.2.10 Potassium Permanganate, 5 Percent (W/V). Dissolve 5 g of $KMnO_4$ in water and dilute to 100 ml.

7.2.11 Filter. Whatman No. 40, or equivalent.

8.0 Sample Collection, Preservation, Transport, and Storage

Same as Method 101, Section 8.0, with the exception of the following:

8.1 Preliminary Determinations. Same as Method 101, Section 8.2, except that the liberation of free iodine in the first impinger

due to high Hg or sulfur dioxide concentrations is not applicable. In this method, high oxidizable organic content may make it impossible to sample for the desired minimum time. This problem is indicated by the complete bleaching of the purple color of the $KMnO_4$ solution. In cases where an excess of water condensation is encountered, collect two runs to make one sample, or add an extra impinger in front of the first impinger (also containing acidified $KMnO_4$ solution).

8.2 Preparation of Sampling Train. Same as Method 101, Section 8.3, with the exception of the following:

8.2.1 In this method, clean all the glass components by rinsing with 50 percent HNO_3, tap water, 8 N HCl, tap water, and finally with deionized distilled water. Then place 50 ml of absorbing solution in the first impinger and 100 ml in each of the second and third impingers.

8.2.2 If a filter is used, use a pair of tweezers to place the filter in the filter holder. Be sure to center the filter, and place the gasket in the proper position to prevent the sample gas stream from bypassing the filter. Check the filter for tears after assembly is completed. Be sure also to set the filter heating system at the desired operating temperature after the sampling train has been assembled.

8.3 Sampling Train Operation. In addition to the procedure outlined in Method 101, Section 8.5, maintain a temperature around the filter (if applicable) of 120 ± 14 °C (248 ± 25 °F).

8.4 Sample Recovery. Same as Method 101, Section 8.7, with the exception of the following:

8.4.1 Transfer the probe, impinger assembly, and (if applicable) filter assembly to the cleanup area.

8.4.2 Treat the sample as follows:

8.4.2.1 Container No. 1 (Impinger, Probe, and Filter Holder) and, if applicable, Container No. 1A (HCl rinse).

8.4.2.1.1 Using a graduated cylinder, measure the liquid in the first three impingers to within 1 ml. Record the volume of liquid present (*e.g.*, see Figure 5–6 of Method 5). This information is needed to calculate the moisture content of the effluent gas. (Use only graduated cylinder and glass storage bottles that have been precleaned as in Section 8.2.1.) Place the contents of the first three impingers (four if an extra impinger was added as described in Section 8.1) into a 1000-ml glass sample bottle labeled Container No. 1.

NOTE: If a filter is used, remove the filter from its holder as outlined under Section 8.4.3.

8.4.2.1.2 Taking care that dust on the outside of the probe or other exterior surfaces does not get into the sample, quantitatively recover the Hg (and any condensate) from the probe nozzle, probe fitting, probe liner, front half of the filter holder (if applicable), and impingers as follows: Rinse these components with a total of 400 ml (350 ml if an extra impinger was added as described in Section 8.1) of fresh absorbing solution, carefully assuring removal of all loose particulate matter from the impingers; add all washings to the 1000 ml glass sample bottle. To remove any residual brown deposits on the glassware following the permanganate rinse, rinse with approximately 100 ml of water, carefully assuring removal of all loose particulate matter from the impingers. Add this rinse to Container No. 1.

8.4.2.1.3 If no visible deposits remain after this water rinse, do not rinse with 8 N HCl. If deposits do remain on the glassware after the water rinse, wash impinger walls and stems with 25 ml of 8 N HCl, and place the wash in a separate container labeled Container No. 1A as follows: Place 200 ml of water in a sample container labeled Container No. 1A. Wash the impinger walls and stem with the HCl by turning the impinger on its side and rotating it so that the HCl contacts all inside surfaces. Pour the HCl wash carefully with stirring into Container No. 1A.

8.4.2.1.4 After all washings have been collected in the appropriate sample container(s), tighten the lid(s) on the container(s) to prevent leakage during shipment to the laboratory. Mark the height of the fluid level to allow subsequent determination of whether leakage has occurred during transport. Label each container to identify its contents clearly.

8.4.3 Container No. 2 (Silica Gel). Same as Method 5, Section 8.7.6.3.

8.4.4 Container No. 3 (Filter). If a filter was used, carefully remove it from the filter holder, place it in a 100-ml glass sample bottle, and add 20 to 40 ml of absorbing solution. If it is necessary to fold the filter, be sure that the particulate cake is inside the fold. Carefully transfer to the 100-ml sample bottle any particulate matter and filter fibers that adhere to the filter holder gasket by using a dry Nylon bristle brush and a sharp-edged blade. Seal the container. Label the container to identify its contents clearly. Mark the height of the fluid level to allow subsequent determination of whether leakage has occurred during transport.

8.4.5 Container No. 4 (Filter Blank). If a filter was used, treat an unused filter from the same filter lot as that used for sampling according to the procedures outlined in Section 8.4.4.

8.4.6 Container No. 5 (Absorbing Solution Blank). Place 650 ml of 4 percent $KMnO_4$ absorbing solution in a 1000-ml sample bottle. Seal the container.

8.4.7 Container No. 6 (HCl Rinse Blank). Place 200 ml of water in a 1000-ml sample bottle, and add 25 ml of 8 N HCl carefully

with stirring. Seal the container. Only one blank sample per 3 runs is required.

9.0 Quality Control

9.1 Miscellaneous Quality Control Measures.

Section	Quality control measure	Effect
8.0, 10.0	Sampling equipment leak-checks and calibration.	Ensure accuracy and precision of sampling measurements.
10.2	Spectrophotometer calibration	Ensure linearity of spectrophotometer response to standards.
11.3.3	Check for matrix effects	Eliminate matrix effects.

9.2 Volume Metering System Checks. Same as Method 5, Section 9.2.

10.0 Calibration and Standardization

Same as Method 101, Section 10.0, with the following exceptions:

10.1 Optical Cell Heating System Calibration. Same as in Method 101, Section 10.4, except use a-25 ml graduated cylinder to add 25 ml of water to the bottle section of the aeration cell.

10.2 Spectrophotometer and Recorder Calibration.

10.2.1 The Hg response may be measured by either peak height or peak area.

NOTE: The temperature of the solution affects the rate at which elemental Hg is released from a solution and, consequently, it affects the shape of the absorption curve (area) and the point of maximum absorbance (peak height). To obtain reproducible results, all solutions must be brought to room temperature before use.

10.2.2 Set the spectrophotometer wave length at 253.7 nm, and make certain the optical cell is at the minimum temperature that will prevent water condensation. Then set the recorder scale as follows: Using a 25-ml graduated cylinder, add 25 ml of water to the aeration cell bottle. Add three drops of Antifoam B to the bottle, and then pipet 5.0 ml of the working Hg standard solution into the aeration cell.

NOTE: Always add the Hg-containing solution to the aeration cell after the 25 ml of water.

10.2.3 Place a Teflon-coated stirring bar in the bottle. Add 5 ml of absorbing solution to the aeration bottle, and mix well. Before attaching the bottle section to the bubbler section of the aeration cell, make certain that (1) the aeration cell exit arm stopcock (Figure 101–3 of Method 101) is closed (so that Hg will not prematurely enter the optical cell when the reducing agent is being added) and (2) there is no flow through the bubbler. If conditions (1) and (2) are met, attach the bottle section to the bubbler section of the aeration cell. Add sodium chloride-hydroxylamine in 1 ml increments until the solution is colorless. Now add 5 ml of tin (II) solution to the aeration bottle through the side arm, and immediately stopper the side arm. Stir the solution for 15 seconds, turn on the recorder, open the aeration cell exit arm stopcock, and immediately initiate aeration with continued stirring. Determine the maximum absorbance of the standard, and set this value to read 90 percent of the recorder full scale.

11.0 Analytical Procedure

11.1 Sample Loss Check. Check the liquid level in each container to see if liquid was lost during transport. If a noticeable amount of leakage occurred, either void the sample or use methods subject to the approval of the Administrator to account for the losses.

11.2 Sample Preparation. Treat sample containers as follows:

11.2.1 Containers No. 3 and No. 4 (Filter and Filter Blank).

11.2.1.1 If a filter is used, place the contents, including the filter, of Containers No. 3 and No. 4 in separate 250-ml beakers, and heat the beakers on a steam bath until most of the liquid has evaporated. Do not heat to dryness. Add 20 ml of concentrated HNO_3 to the beakers, cover them with a watch glass, and heat on a hot plate at 70 °C (160 °F) for 2 hours. Remove from the hot plate.

11.2.1.2 Filter the solution from digestion of the Container No. 3 contents through Whatman No. 40 filter paper, and save the filtrate for addition to the Container No. 1 filtrate as described in Section 11.2.2. Discard the filter paper.

11.2.1.3 Filter the solution from digestion of the Container No. 4 contents through Whatman No. 40 filter paper, and save the filtrate for addition to Container No. 5 filtrate as described in Section 11.2.3 below. Discard the filter paper.

11.2.2 Container No. 1 (Impingers, Probe, and Filter Holder) and, if applicable, No. 1A (HCl rinse).

11.2.2.1 Filter the contents of Container No. 1 through Whatman No. 40 filter paper into a 1 liter volumetric flask to remove the brown manganese dioxide (MnO_2) precipitate. Save the filter for digestion of the brown MnO_2 precipitate. Add the sample filtrate from Container No. 3 to the 1-liter volumetric flask, and dilute to volume with water. If the combined filtrates are greater than 1000 ml, determine the volume to the

nearest ml and make the appropriate corrections for blank subtractions. Mix thoroughly. Mark the filtrate as analysis Sample No. A.1 and analyze for Hg within 48 hr of the filtration step. Place the saved filter, which was used to remove the brown MnO_2 precipitate, into an appropriate sized container. In a laboratory hood, add 25 ml of 8 N HCl to the filter and allow to digest for a minimum of 24 hours at room temperature.

11.2.2.2 Filter the contents of Container 1A through Whatman No. 40 filter paper into a 500-ml volumetric flask. Then filter the digestate of the brown MnO_2 precipitate from Container No. 1 through Whatman No. 40 filter paper into the same 500-ml volumetric flask, and dilute to volume with water. Mark this combined 500 ml dilute solution as analysis Sample No. A.2. Discard the filters.

11.2.3 Container No. 5 (Absorbing Solution Blank) and No. 6 (HCl Rinse Blank).

11.2.3.1 Treat Container No. 5 as Container No. 1 (as described in Section 11.2.2), except substitute the filter blank filtrate from Container No. 4 for the sample filtrate from Container No. 3, and mark as Sample A.1 Blank.

11.2.3.2 Treat Container No. 6 as Container No. 1A, (as described in Section 11.2.2, except substitute the filtrate from the digested blank MnO_2 precipitate for the filtrate from the digested sample MnO_2 precipitate, and mark as Sample No. A.2 Blank.

NOTE: When analyzing samples A.1 Blank and HCl A.2 Blank, always begin with 10 ml aliquots. This applies specifically to blank samples.

11.3 Analysis. Calibrate the analytical equipment and develop a calibration curve as outlined in Section 10.0.

11.3.1 Mercury Samples. Then repeat the procedure used to establish the calibration curve with appropriately sized aliquots (1 to 10 ml) of the samples (from Sections 11.2.2 and 11.2.3) until two consecutive peak heights agree within 3 percent of their average value. If the 10 ml sample is below the detectable limit, use a larger aliquot (up to 20 ml), but decrease the volume of water added to the aeration cell accordingly to prevent the solution volume from exceeding the capacity of the aeration bottle. If the peak maximum of a 1.0 ml aliquot is off scale, further dilute the original sample to bring the Hg concentration into the calibration range of the spectrophotometer. If the Hg content of the absorbing solution and filter blank is below the working range of the analytical method, use zero for the blank.

11.3.2 Run a blank and standard at least after every five samples to check the spectrophotometer calibration; recalibrate as necessary.

11.3.3 Check for Matrix Effects (optional). Same as Method 101, Section 11.3.3.

12.0 Data Analysis and Calculations

NOTE: Carry out calculations, retaining at least one extra decimal significant figure beyond that of the acquired data. Round off figures only after the final calculation. Other forms of the equations may be used as long as they give equivalent results.

12.1 Nomenclature.

$C_{(fltr)Hg}$ = Total ng of Hg in aliquot of $KMnO_4$ filtrate and HNO_3 digestion of filter analyzed (aliquot of analysis Sample No. A.1).

$C_{(fltr\ blk)Hg}$ = Total ng of Hg in aliquot of $KMnO_4$ blank and HNO_3 digestion of blank filter analyzed (aliquot of analysis Sample No. A.1 blank).

$C_{(HC1\ blk)Hg}$ = Total ng of Hg analyzed in aliquot of the 500-ml analysis Sample No. HCl A.2 blank.

$C_{(HCl)Hg}$ = Total ng of Hg analyzed in the aliquot from the 500-ml analysis Sample No. HCl A.2.

DF = Dilution factor for the HCl-digested Hg-containing solution, Analysis Sample No. ''HCl A.2.''

DF_{blk} = Dilution factor for the HCl-digested Hg containing solution, Analysis Sample No. ''HCl A.2 blank.'' (Refer to sample No. ''HCl A.2'' dilution factor above.)

$m_{(fltr)Hg}$ = Total blank corrected µg of Hg in $KMnO_4$ filtrate and HNO_3 digestion of filter sample.

$m_{(HCl)Hg}$ = Total blank corrected µg of Hg in HCl rinse and HCl digestate of filter sample.

m_{Hg} = Total blank corrected Hg content in each sample, µg.

S = Aliquot volume of sample added to aeration cell, ml.

S_{blk} = Aliquot volume of blank added to aeration cell, ml.

$Vf_{(blk)}$ = Solution volume of blank sample, 1000 ml for samples diluted as described in Section 11.2.2.

$V_{f(fltr)}$ = Solution volume of original sample, normally 1000 ml for samples diluted as described in Section 11.2.2.

$V_{f(HCl)}$ = Solution volume of original sample, 500 ml for samples diluted as described in Section 11.2.1.

10^{-3} = Conversion factor, µg/ng.

12.2 Average Dry Gas Meter Temperature and Average Orifice Pressure Drop, Dry Gas Volume, Volume of Water Vapor Condensed, Moisture Content, Isokinetic Variation, and Stack Gas Velocity and Volumetric Flow Rate. Same as Method 5, Sections 12.2 through 12.5, 12.11, and 12.12, respectively.

12.3 Total Mercury.

12.3.1 For each source sample, correct the average maximum absorbance of the two consecutive samples whose peak heights agree within 3 percent of their average for the contribution of the blank. Use the calibration curve and these corrected averages to determine the final total weight of Hg in

ng in the aeration cell for each source sample.

12.3.2 Correct for any dilutions made to bring the sample into the working range of the spectrophotometer.

$$m_{(HCl)Hg} = \frac{\left[C_{(HCl)Hg} DF\right]}{S} - \frac{\left[C_{(HCl\,blk)Hg} DF_{blk}\right]}{S_{blk}} Vf_{(HC1)}\left(10^{-3}\right) \qquad \text{Eq. 101A-1}$$

NOTE: This dilution factor applies only to the intermediate dilution steps, since the original sample volume [$(V_f)_{HCL}$] of ''HCl A.2'' has been factored out in the equation along with the sample aliquot (S). In Eq. 101A–1, the sample aliquot, S, is introduced directly into the aeration cell for analysis according to the procedure outlined in Section 11.3.1. A dilution factor is required only if it is necessary to bring the sample into the analytical instrument's calibration range.

NOTE: The maximum allowable blank subtraction for the HCl is the lesser of the two following values: (1) the actual blank measured value (analysis Sample No. HCl A.2 blank), or (2) 5% of the Hg content in the combined HCl rinse and digested sample (analysis Sample No. HCl A.2).

$$m_{(fltr)Hg} = \frac{\left[C_{(fltr)Hg} DF\, V_{f(fltr)}\right]}{S} - \frac{\left[C_{(fltr\,blk)Hg} DF_{blk}\, V_{f(blk)}\right]}{S_{blk}} \qquad \text{Eq. 101A-2}$$

NOTE: The maximum allowable blank subtraction for the HCl is the lesser of the two following values: (1) the actual blank measured value (analysis Sample No. ''A.1 blank''), or (2) 5% of the Hg content in the filtrate (analysis Sample No. ''A.1'').

$$m_{Hg} = m_{(HCl)Hg} + m_{(fltr)Hg} \qquad \text{Eq. 101A-3}$$

12.3 Mercury Emission Rate. Same as Method 101, Section 12.3.

12.4 Determination of Compliance. Same as Method 101, Section 12.4.

13.0 Method Performance

13.1 Precision. Based on eight paired-train tests, the intra-laboratory standard deviation was estimated to be 4.8 µg/ml in the concentration range of 50 to 130 µg/m^3.

13.2 Bias. [Reserved]

13.3 Range. After initial dilution, the range of this method is 20 to 800 ng Hg/ml. The upper limit can be extended by further dilution of the sample.

14.0 Pollution Prevention [Reserved]

15.0 Waste Management [Reserved]

16.0 References

Same as Section 16.0 of Method 101, with the addition of the following:

1. Mitchell, W.J., *et al.* Test Methods to Determine the Mercury Emissions from Sludge Incineration Plants. U.S. Environmental Protection Agency. Research Triangle Park, NC. Publication No. EPA–600/4–79–058. September 1979.

2. Wilshire, Frank W., *et al.* Reliability Study of the U.S. EPA's Method 101A—Determination of Particulate and Gaseous Mercury Emissions. U.S. Environmental Protection Agency. Research Triangle Park, NC. Report No. 600/D–31/219 AREAL 367, NTIS Acc No. PB91–233361.

3. Memorandum from William J. Mitchell to Roger T. Shigehara discussing the potential safety hazard in Section 7.2 of Method 101A. February 28, 1990.

17.0 Tables, Diagrams, Flowcharts, And Validation Data [Reserved]

METHOD 102—DETERMINATION OF PARTICULATE AND GASEOUS MERCURY EMISSIONS FROM CHLOR-ALKALI PLANTS (HYDROGEN STREAMS)

NOTE: This method does not include all of the specifications (*e.g.*, equipment and supplies) and procedures (*e.g.*, sampling and analytical) essential to its performance. Some material is incorporated by reference from other methods in this part and in appendix A to 40 CFR part 60. Therefore, to obtain reliable results, persons using this method should have a thorough knowledge of at least the following additional test methods: Method 1, Method 2, Method 3, Method 5, and Method 101.

1.0 Scope and Application

1.1 Analytes.

Analyte	CAS No.	Sensitivity
Mercury (Hg)	7439–97–6	Dependent upon recorder and spectrophotometer.

1.2 Applicability. This method is applicable for the determination of Hg emissions, including both particulate and gaseous Hg, from chlor-alkali plants and other sources (as specified in the regulations) where the carrier-gas stream in the duct or stack is principally hydrogen.

1.3 Data Quality Objectives. Adherence to the requirements of this method will enhance the quality of the data obtained from air pollutant sampling methods.

2.0 Summary of Method

2.1 Particulate and gaseous Hg emissions are withdrawn isokinetically from the source and collected in acidic iodine monochloride (ICl) solution. The Hg collected (in the mercuric form) is reduced to elemental Hg, which is then aerated from the solution into an optical cell and measured by atomic absorption spectrophotometry.

3.0 Definitions [Reserved]

4.0 Interferences

Same as Method 101, Section 4.2.

5.0 Safety

5.1 Disclaimer. This method may involve hazardous materials, operations, and equipment. This test method may not address all of the safety problems associated with its use. It is the responsibility of the user of this test method to establish appropriate safety and health practices and determine the applicability of regulatory limitations prior to performing this test method.

5.2 Corrosive Reagents. Same as Method 101, Section 5.2.

5.3 Explosive Mixtures. The sampler must conduct the source test under conditions of utmost safety because hydrogen and air mixtures are explosive. Since the sampling train essentially is leakless, attention to safe operation can be concentrated at the inlet and outlet. If a leak does occur, however, remove the meter box cover to avoid a possible explosive mixture. The following specific precautions are recommended:

5.3.1 Operate only the vacuum pump during the test. The other electrical equipment, *e.g.*, heaters, fans, and timers, normally are not essential to the success of a hydrogen stream test.

5.3.2 Seal the sample port to minimize leakage of hydrogen from the stack.

5.3.3 Vent sampled hydrogen at least 3 m (10 ft) away from the train. This can be accomplished by attaching a 13-mm (0.50-in.) ID Tygon tube to the exhaust from the orifice meter.

NOTE: A smaller ID tubing may cause the orifice meter calibration to be erroneous. Take care to ensure that the exhaust line is not bent or pinched.

6.0 Equipment and Supplies

Same as Method 101, Section 6.0, with the exception of the following:

6.1 Probe Heating System. Do not use, unless otherwise specified.

6.2 Glass Fiber Filter. Do not use, unless otherwise specified.

7.0 Reagents and Standards

Same as Method 101, Section 7.0.

8.0 Sample Collection, Preservation, Transport, and Storage

Same as Method 101, Section 8.0, with the exception of the following:

8.1 Setting of Isokinetic Rates.

8.1.1 If a nomograph is used, take special care in the calculation of the molecular weight of the stack gas and in the setting of the nomograph to maintain isokinetic conditions during sampling (Sections 8.1.1.1 through 8.1.1.3 below).

8.1.1.1 Calibrate the meter box orifice. Use the techniques described in APTD–0576 (see Reference 9 in Section 17.0 of Method 5). Calibration of the orifice meter at flow conditions that simulate the conditions at the source is suggested. Calibration should either be done with hydrogen or with some other gas having similar Reynolds Number

so that there is similarity between the Reynolds Numbers during calibration and during sampling.

8.1.1.2 The nomograph described in APTD–0576 cannot be used to calculate the C factor because the nomograph is designed for use when the stack gas dry molecular weight is 29 ± 4. Instead, the following calculation should be made to determine the proper C factor:

$$C = 0.00154\Delta H@C_p^{\,2}T_m\left(P_s/P_m\right)\frac{\left(1-B_{ws}\right)^2}{\left(1-B_{ws}\right)+18B_{ws}} \qquad \text{Eq. 102-1}$$

Where:

B_{ws} = Fraction by volume of water vapor in the stack gas.

C_p = Pitot tube calibration coefficient, dimensionless.

M_d = Dry molecular weight of stack gas, lb/lb-mole.

P_s = Absolute pressure of stack gas, in. Hg.

P_m = Absolute pressure of gas at the meter, in. Hg.

T_m = Absolute temperature of gas at the orifice, °R.

$\Delta H_@$ = Meter box calibration factor obtained in Section 8.1.1.1, in. H_2O.

0.00154 = (in. H_2O/°R).

NOTE: This calculation is left in English units, and is not converted to metric units because nomographs are based on English units.

8.1.1.3 Set the calculated C factor on the operating nomograph, and select the proper nozzle diameter and K factor as specified in APTD–0576. If the C factor obtained in Section 8.1.1.2 exceeds the values specified on the existing operating nomograph, expand the C scale logarithmically so that the values can be properly located.

8.1.2 If a calculator is used to set isokinetic rates, it is suggested that the isokinetic equation presented in Reference 13 in Section 17.0 of Method 101 be consulted.

8.2 Sampling in Small (<12-in. Diameter) Stacks. When the stack diameter (or equivalent diameter) is less than 12 inches, conventional pitot tube-probe assemblies should not be used. For sampling guidelines, see Reference 14 in Section 17.0 of Method 101.

9.0 Quality Control

Same as Method 101, Section 9.0.

10.0 Calibration and Standardizations

Same as Method 101, Section 10.0.

11.0 Analytical Procedure

Same as Method 101, Section 11.0.

12.0 Data Analysis and Calculations

Same as Method 101, Section 12.0.

13.0 Method Performance

Same as Method 101, Section 13.0.

13.1 Analytical Range. After initial dilution, the range of this method is 0.5 to 120 µg Hg/ml. The upper limit can be extended by further dilution of the sample.

14.0 Pollution Prevention. [Reserved]

15.0 Waste Management. [Reserved]

16.0 References

Same as Method 101, Section 16.0.

17.0 Tables, Diagrams, Flowcharts, and Validation Data. [Reserved]

METHOD 103—BERYLLIUM SCREENING METHOD

1.0 Scope and Application

1.1 Analytes.

Analyte	CAS No.	Sensitivity
Beryllium (Be)	7440–41–7	Dependent upon analytical procedure used.

1.2 Applicability. This procedure details guidelines and requirements for methods acceptable for use in determining Be emissions in ducts or stacks at stationary sources.

1.3 Data Quality Objectives. Adherence to the requirements of this method will enhance the quality of the data obtained from air pollutant sampling methods.

2.0 Summary of Method

2.1 Particulate Be emissions are withdrawn isokinetically from three points in a duct or stack and are collected on a filter. The collected sample is analyzed for Be using an appropriate technique.

3.0 Definitions. [Reserved]

4.0 Interferences. [Reserved]

5.0 Safety

5.1 Disclaimer. This method may involve hazardous materials, operations, and equipment. This test method may not address all of the safety problems associated with its use. It is the responsibility of the user of this test method to establish appropriate safety and health practices and determine the applicability of regulatory limitations prior to performing this test method.

5.2 Hydrochloric Acid (HCl). Highly corrosive and toxic. Vapors are highly irritating to eyes, skin, nose, and lungs, causing severe damage. May cause bronchitis, pneumonia, or edema of lungs. Exposure to concentrations of 0.13 to 0.2 percent can be lethal to humans in a few minutes. Provide ventilation to limit exposure. Reacts with metals, producing hydrogen gas. Personal protective equipment and safe procedures are useful in preventing chemical splashes. If contact occurs, immediately flush with copious amounts of water at least 15 minutes. Remove clothing under shower and decontaminate. Treat residual chemical burn as thermal burn.

6.0 Equipment and Supplies

6.1 Sample Collection. A schematic of the required sampling train configuration is shown in Figure 103–1 in Section 17.0. The essential components of the train are as follows:

6.1.1 Nozzle. Stainless steel, or equivalent, with sharp, tapered leading edge.

6.1.2 Probe. Sheathed borosilicate or quartz glass tubing.

6.1.3 Filter. Millipore AA, or equivalent, with appropriate filter holder that provides a positive seal against leakage from outside or around the filter. It is suggested that a Whatman 41, or equivalent, be placed immediately against the back side of the Millipore filter as a guard against breakage of the Millipore. Include the backup filter in the analysis. To be equivalent, other filters shall exhibit at least 99.95 percent efficiency (0.05 percent penetration) on 0.3 micron dioctyl phthalate smoke particles, and be amenable to the Be analysis procedure. The filter efficiency tests shall be conducted in accordance with ASTM D 2986–71, 78, 95a (incorporated by reference—see §61.18). Test data from the supplier's quality control program are sufficient for this purpose.

6.1.4 Meter-Pump System. Any system that will maintain isokinetic sampling rate, determine sample volume, and is capable of a sampling rate of greater than 14 lpm (0.5 cfm).

6.2 Measurement of Stack Conditions. The following equipment is used to measure stack conditions:

6.2.1 Pitot Tube. Type S, or equivalent, with a constant coefficient (±5 percent) over the working range.

6.2.2 Inclined Manometer, or Equivalent. To measure velocity head to ±10 percent of the minimum value.

6.2.3 Temperature Measuring Device. To measure stack temperature to ±1.5 percent of the minimum absolute stack temperature.

6.2.4 Pressure Measuring Device. To measure stack pressure to ±2.5 mm Hg (0.1 in. Hg).

6.2.5 Barometer. To measure atmospheric pressure to ±2.5 mm Hg (0.1 in. Hg).

6.2.6 Wet and Dry Bulb Thermometers, Drying Tubes, Condensers, or Equivalent. To determine stack gas moisture content to ±1 percent.

6.3 Sample Recovery.

6.3.1 Probe Cleaning Equipment. Probe brush or cleaning rod at least as long as probe, or equivalent. Clean cotton balls, or equivalent, should be used with the rod.

6.3.2 Leakless Glass Sample Bottles. To contain sample.

6.4 Analysis. All equipment necessary to perform an atomic absorption, spectrographic, fluorometric, chromatographic, or equivalent analysis.

7.0 Reagents and Standards

7.1 Sample Recovery.

7.1.1 Water. Deionized distilled, to conform to ASTM D 1193–77, 91 (incorporated by reference—see §61.18), Type 3.

7.1.2 Acetone. Reagent grade.

7.1.3 Wash Acid, 50 Percent (V/V) Hydrochloric Acid (HCl). Mix equal volumes of concentrated HCl and water, being careful to add the acid slowly to the water.

7.2 Analysis. Reagents and standards as necessary for the selected analytical procedure.

8.0 Sample Collection, Preservation, Transport, and Storage

Guidelines for source testing are detailed in the following sections. These guidelines are generally applicable; however, most sample sites differ to some degree and temporary alterations such as stack extensions or expansions often are required to insure the best possible sample site. Further, since Be is hazardous, care should be taken to minimize exposure. Finally, since the total quantity of Be to be collected is quite small, the test must be carefully conducted to prevent contamination or loss of sample.

8.1 Selection of a Sampling Site and Number of Sample Runs. Select a suitable sample site that is as close as practicable to the point of atmospheric emission. If possible, stacks smaller than one foot in diameter should not be sampled.

8.1.1 Ideal Sampling Site. The ideal sampling site is at least eight stack or duct diameters downstream and two diameters upstream from any flow disturbance such as a bend, expansion or contraction. For rectangular cross sections, use Equation 103–1 in Section 12.2 to determine an equivalent diameter, D_e.

8.1.2 Alternate Sampling Site. Some sampling situations may render the above sampling site criteria impractical. In such cases, select an alternate site no less than two diameters downstream and one-half diameter upstream from any point of flow disturbance. Additional sample runs are recommended at any sample site not meeting the criteria of Section 8.1.1.

8.1.3 Number of Sample Runs Per Test. Three sample runs constitute a test. Conduct each run at one of three different points. Select three points that proportionately divide the diameter, or are located at 25, 50, and 75 percent of the diameter from the inside wall. For horizontal ducts, sample on a vertical line through the centroid. For rectangular ducts, sample on a line through the centroid and parallel to a side. If additional sample runs are performed per Section 8.1.2, proportionately divide the duct to accommodate the total number of runs.

8.2 Measurement of Stack Conditions. Using the equipment described in Section 6.2, measure the stack gas pressure, moisture, and temperature to determine the molecular weight of the stack gas. Sound engineering estimates may be made in lieu of direct measurements. Describe the basis for such estimates in the test report.

8.3 Preparation of Sampling Train.

8.3.1 Assemble the sampling train as shown in Figure 103–1. It is recommended that all glassware be precleaned by soaking in wash acid for two hours.

8.3.2 Leak check the sampling train at the sampling site. The leakage rate should not be in excess of 1 percent of the desired sample rate.

8.4 Sampling Train Operation.

8.4.1 For each run, measure the velocity at the selected sampling point. Determine the isokinetic sampling rate. Record the velocity head and the required sampling rate. Place the nozzle at the sampling point with the tip pointing directly into the gas stream. Immediately start the pump and adjust the flow to isokinetic conditions. At the conclusion of the test, record the sampling rate. Again measure the velocity head at the sampling point. The required isokinetic rate at the end of the period should not have deviated more than 20 percent from that originally calculated. Describe the reason for any deviation beyond 20 percent in the test report.

8.4.2 Sample at a minimum rate of 14 liters/min (0.5 cfm). Obtain samples over such a period or periods of time as are necessary to determine the maximum emissions which would occur in a 24-hour period. In the case of cyclic operations, perform sufficient sample runs so as to allow determination or calculation of the emissions that occur over the duration of the cycle. A minimum sampling time of two hours per run is recommended.

8.5 Sample Recovery.

8.5.1 It is recommended that all glassware be precleaned as in Section 8.3. Sample recovery should also be performed in an area free of possible Be contamination. When the sampling train is moved, exercise care to prevent breakage and contamination. Set aside a portion of the acetone used in the sample recovery as a blank for analysis. The total amount of acetone used should be measured for accurate blank correction. Blanks can be eliminated if prior analysis shows negligible amounts.

8.5.2 Remove the filter (and backup filter, if used) and any loose particulate matter from filter holder, and place in a container.

8.5.3 Clean the probe with acetone and a brush or long rod and cotton balls. Wash into the container with the filter. Wash out the filter holder with acetone, and add to the same container.

9.0 Quality Control. [Reserved]

10.0 Calibration and Standardization

10.1 Sampling Train. As a procedural check, compare the sampling rate regulation with a dry gas meter, spirometer, rotameter (calibrated for prevailing atmospheric conditions), or equivalent, attached to the nozzle inlet of the complete sampling train.

10.2 Analysis. Perform the analysis standardization as suggested by the manufacturer of the instrument, or the procedures for the analytical method in use.

11.0 Analytical Procedure

Make the necessary preparation of samples and analyze for Be. Any currently acceptable method (e.g., atomic absorption, spectrographic, fluorometric, chromatographic) may be used.

12.0 Data Analysis and Calculations

12.1 Nomenclature.

A_s(avg) = Stack area, m^2 (ft^2).
L = Length.
R = Be emission rate, g/day.
V_s(avg) = Average stack gas velocity, m/sec (ft/sec).
V_{total} = Total volume of gas sampled, m^3 (ft^3).
W = Width.
W_t = Total weight of Be collected, mg.
10^{-6} = Conversion factor, g/µg.
86,400 = Conversion factor, sec/day.

12.2 Calculate the equivalent diameter, De, for a rectangular cross section as follows:

$$D_e = \frac{2 \cdot L \cdot W}{L + W} \qquad \text{Eq. 103-1}$$

12.3 Calculate the Be emission rate, R, in g/day for each stack using Equation 103–2. For cyclic operations, use only the time per day each stack is in operation. The total Be emission rate from a source is the summation of results from all stacks.

$$R = \frac{W_t V_{s(avg)} A_s (86{,}400)\left(10^{-6}\right)}{V_{total}} \qquad \text{Eq. 103-2}$$

12.4 Test Report. Prepare a test report that includes as a minimum: A detailed description of the sampling train used, results of the procedural check described in Section 10.1 with all data and calculations made, all pertinent data taken during the test, the basis for any estimates made, isokinetic sampling calculations, and emission results. Include a description of the test site, with a block diagram and brief description of the process, location of the sample points in the stack cross section, and stack dimensions and distances from any point of disturbance.

13.0 Method Performance. [Reserved]

14.0 Pollution Prevention. [Reserved]

15.0 Waste Management. [Reserved]

16.0 References. [Reserved]

17.0 Tables, Diagrams, Flow Charts, and Validation Data

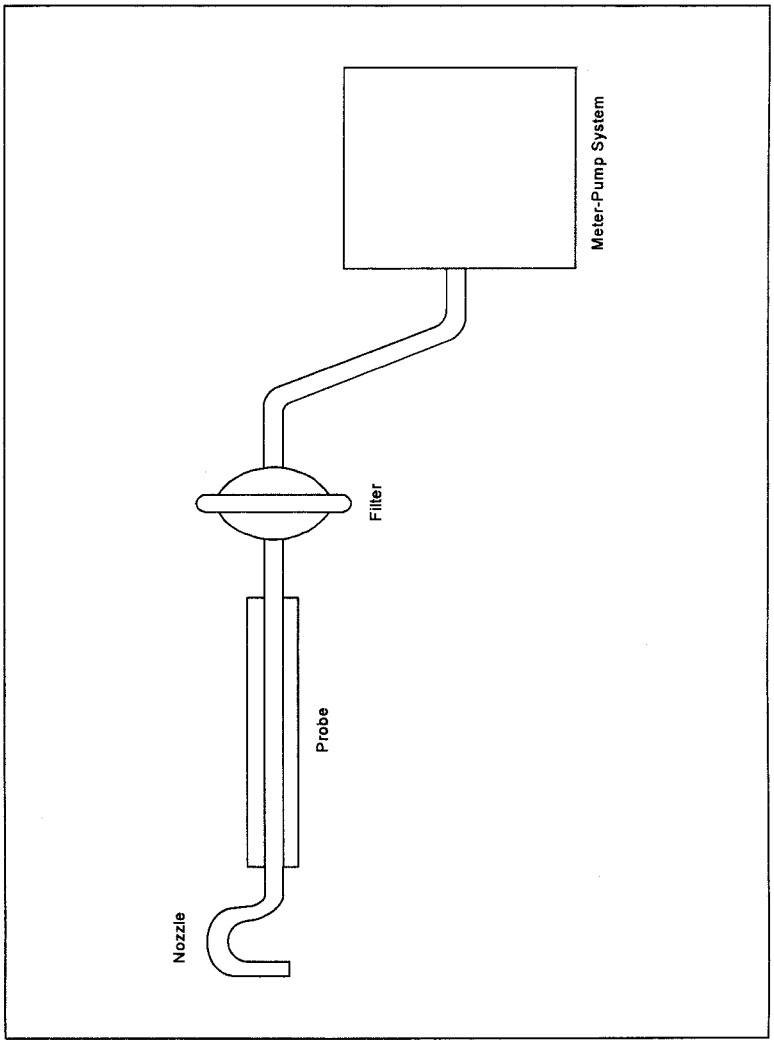

Figure 103-1. Beryllium Screening Method Sampling Train Schematic.

METHOD 104—DETERMINATION OF BERYLLIUM EMISSIONS FROM STATIONARY SOURCES

NOTE: This method does not include all of the specifications (*e.g.*, equipment and supplies) and procedures (*e.g.*, sampling and analytical) essential to its performance. Some material is incorporated by reference from methods in appendix A to 40 CFR part 60. Therefore, to obtain reliable results, persons using this method should have a thorough knowledge of at least the following additional test methods: Method 1, Method 2, Method 3, and Method 5 in appendix A, part 60.

1.0 Scope and Application

1.1 Analytes.

Analyte	CAS No.	Sensitivity
Beryllium (Be)	7440–41–7	Dependent upon recorder and spectrophotometer.

1.2 Applicability. This method is applicable for the determination of Be emissions in ducts or stacks at stationary sources. Unless otherwise specified, this method is not intended to apply to gas streams other than those emitted directly to the atmosphere without further processing.

1.3 Data Quality Objectives. Adherences to the requirements of this method will enhance the quality of the data obtained from air pollutant sampling methods.

2.0 Summary of Method

2.1 Particulate and gaseous Be emissions are withdrawn isokinetically from the source and are collected on a glass fiber filter and in water. The collected sample is digested in an acid solution and is analyzed by atomic absorption spectrophotometry.

3.0 Definitions [Reserved]

4.0 Interferences

4.1 Matrix Effects. Analysis for Be by flame atomic absorption spectrophotometry is sensitive to the chemical composition and to the physical properties (*e.g.*, viscosity, pH) of the sample. Aluminum and silicon in particular are known to interfere when present in appreciable quantities. The analytical procedure includes (optionally) the use of the Method of Standard Additions to check for these matrix effects, and sample analysis using the Method of Standard Additions if significant matrix effects are found to be present (see Reference 2 in Section 16.0).

5.0 Safety

5.1 Disclaimer. This method may involve hazardous materials, operations, and equipment. This test method may not address all of the safety problems associated with its use. It is the responsibility of the user of this test method to establish appropriate safety and health practices and determine the applicability of regulatory limitations prior to performing this test method.

5.2 Corrosive reagents. The following reagents are hazardous. Personal protective equipment and safe procedures are useful in preventing chemical splashes. If contact occurs, immediately flush with copious amounts of water at least 15 minutes. Remove clothing under shower and decontaminate. Treat residual chemical burn as thermal burn.

5.2.1 Hydrochloric Acid (HC_l). Highly toxic. Vapors are highly irritating to eyes, skin, nose, and lungs, causing severe damage. May cause bronchitis, pneumonia, or edema of lungs. Exposure to concentrations of 0.13 to 0.2 percent can be lethal to humans in a few minutes. Provide ventilation to limit exposure. Reacts with metals, producing hydrogen gas.

5.2.2 Hydrogen Peroxide (H_2O_2). Irritating to eyes, skin, nose, and lungs.

5.2.3 Nitric Acid (HNO_3). Highly corrosive to eyes, skin, nose, and lungs. Vapors cause bronchitis, pneumonia, or edema of lungs. Reaction to inhalation may be delayed as long as 30 hours and still be fatal. Provide ventilation to limit exposure. Strong oxidizer. Hazardous reaction may occur with organic materials such as solvents.

5.2.4 Sodium Hydroxide (NaOH). Causes severe damage to eyes and skin. Inhalation causes irritation to nose, throat, and lungs. Reacts exothermically with limited amounts of water.

5.3 Beryllium is hazardous, and precautions should be taken to minimize exposure.

6.0 Equipment and Supplies

6.1 Sample Collection. Same as Method 5, Section 6.1, with the exception of the following:

6.1.1 Sampling Train. Same as Method 5, Section 6.1.1, with the exception of the following:

6.1.2 Probe Liner. Borosilicate or quartz glass tubing. A heating system capable of maintaining a gas temperature of 120 ± 14 °C (248 ± 25 °F) at the probe exit during sampling to prevent water condensation may be used.

NOTE: Do not use metal probe liners.

6.1.3 Filter Holder. Borosilicate glass, with a glass frit filter support and a silicone rubber gasket. Other materials of construction (*e.g.*, stainless steel, Teflon, Viton) may be used, subject to the approval of the Administrator. The holder design shall provide a positive seal against leakage from the outside or around the filter. The holder shall be attached immediately at the outlet of the probe. A heating system capable of maintaining the filter at a minimum temperature in the range of the stack temperature may be used to prevent condensation from occurring.

6.1.4 Impingers. Four Greenburg-Smith impingers connected in series with leak-free ground glass fittings or any similar leak-free noncontaminating fittings. For the first, third, and fourth impingers, use impingers that are modified by replacing the tip with a 13 mm-ID (0.5 in.) glass tube extending to 13 mm (0.5 in.) from the bottom of the flask may be used.

6.2 Sample Recovery. The following items are needed for sample recovery:

6.2.1 Probe Cleaning Rod. At least as long as probe.

6.2.2 Glass Sample Bottles. Leakless, with Teflon-lined caps, 1000 ml.

6.2.3 Petri Dishes. For filter samples, glass or polyethylene, unless otherwise specified by the Administrator.

6.2.4 Graduated Cylinder. 250 ml.

6.2.5 Funnel and Rubber Policeman. To aid in transfer of silica gel to container; not necessary if silica gel is weighed in the field.

6.2.6 Funnel. Glass, to aid in sample recovery.

6.2.7 Plastic Jar. Approximately 300 ml.

6.3 Analysis. The following items are needed for sample analysis:

6.3.1 Atomic Absorption Spectrophotometer. Perkin-Elmer 303, or equivalent, with nitrous oxide/acetylene burner.

6.3.2 Hot Plate.

6.3.3 Perchloric Acid Fume Hood.

7.0 Reagents and Standards

NOTE: Unless otherwise indicated, it is intended that all reagents conform to the specifications established by the Committee on Analytical Reagents of the American Chemical Society, where such specifications are available; otherwise, use the best available grade.

7.1 Sample Collection. Same as Method 5, Section 7.1, including deionized distilled water conforming to ASTM D 1193–77 or 91 (incorporated by reference—see §61.18), Type 3. The Millipore AA filter is recommended.

7.2 Sample Recovery. Same as Method 5 in appendix A, part 60, Section 7.2, with the addition of the following:

7.2.1 Wash Acid, 50 Percent (V/V) Hydrochloric Acid (HCl). Mix equal volumes of concentrated HCl and water, being careful to add the acid slowly to the water.

7.3 Sample Preparation and Analysis. The following reagents and standards and standards are needed for sample preparation and analysis:

7.3.1 Water. Same as in Section 7.1.

7.3.2. Perchloric Acid ($HClO_4$). Concentrated (70 percent V/V).

7.3.3 Nitric Acid (HNO_3). Concentrated.

7.3.4 Beryllium Powder. Minimum purity 98 percent.

7.3.5 Sulfuric Acid (H_2SO_4) Solution, 12 N. Dilute 33 ml of concentrated H_2SO_4 to 1 liter with water.

7.3.6 Hydrochloric Acid Solution, 25 Percent HCl (V/V).

7.3.7 Stock Beryllium Standard Solution, 10 µg Be/ml. Dissolve 10.0 mg of Be in 80 ml of 12 N H_2SO_4 in a 1000-ml volumetric flask. Dilute to volume with water. This solution is stable for at least one month. Equivalent strength Be stock solutions may be prepared from Be salts such as $BeCl_2$ and $Be(NO_3)_2$ (98 percent minimum purity).

7.3.8 Working Beryllium Standard Solution, 1 µg Be/ml. Dilute a 10 ml aliquot of the stock beryllium standard solution to 100 ml with 25 percent HCl solution to give a concentration of 1 mg/ml. Prepare this dilute stock solution fresh daily.

8.0 Sample Collection, Preservation, Transport, and Storage

The amount of Be that is collected is generally small, therefore, it is necessary to exercise particular care to prevent contamination or loss of sample.

8.1 Pretest Preparation. Same as Method 5, Section 8.1, except omit Section 8.1.3.

8.2 Preliminary Determinations. Same as Method 5, Section 8.2, with the exception of the following:

8.2.1 Select a nozzle size based on the range of velocity heads to assure that it is not necessary to change the nozzle size in order to maintain isokinetic sampling rates below 28 liters/min (1.0 cfm).

8.2.2 Obtain samples over a period or periods of time that accurately determine the maximum emissions that occur in a 24-hour period. In the case of cyclic operations, perform sufficient sample runs for the accurate determination of the emissions that occur over the duration of the cycle. A minimum sample time of 2 hours per run is recommended.

8.3 Preparation of Sampling Train. Same as Method 5, Section 8.3, with the exception of the following:

8.3.1 Prior to assembly, clean all glassware (probe, impingers, and connectors) by first soaking in wash acid for 2 hours, followed by rinsing with water.

8.3.2 Save a portion of the water for a blank analysis.

8.3.3 Procedures relating to the use of metal probe liners are not applicable.

8.3.4 Probe and filter heating systems are needed only if water condensation is a problem. If this is the case, adjust the heaters to provide a temperature at or above the stack temperature. However, membrane filters such as the Millipore AA are limited to about 107 °C (225 °F). If the stack gas is in excess of about 93 °C (200 °F), consideration should be given to an alternate procedure such as moving the filter holder downstream of the first impinger to insure that the filter does not exceed its temperature limit. After the sampling train has been assembled, turn on and set the probe heating system, if applicable, at the desired operating temperature. Allow time for the temperatures to stabilize. Place crushed ice around the impingers.

NOTE: An empty impinger may be inserted between the third impinger and the silica gel to remove excess moisture from the sample stream.

8.4 Leak Check Procedures, Sampling Train Operation, and Calculation of Percent

Isokinetic. Same as Method 5, Sections 8.4, 8.5, and 8.6, respectively.

8.5 Sample Recovery. Same as Method 5, Section 8.7, except treat the sample as follows: Transfer the probe and impinger assembly to a cleanup area that is clean, protected from the wind, and free of Be contamination. Inspect the train before and during this assembly, and note any abnormal conditions. Treat the sample as follows: Disconnect the probe from the impinger train.

8.5.1 Container No. 1. Same as Method 5, Section 8.7.6.1.

8.5.2 Container No. 2. Place the contents (measured to 1 ml) of the first three impingers into a glass sample bottle. Use the procedures outlined in Section 8.7.6.2 of Method 5, where applicable, to rinse the probe nozzle, probe fitting, probe liner, filter holder, and all glassware between the filter holder and the back half of the third impinger with water. Repeat this procedure with acetone. Place both water and acetone rinse solutions in the sample bottle with the contents of the impingers.

8.5.3 Container No. 3. Same as Method 5, Section 8.7.6.3.

8.6 Blanks.

8.6.1 Water Blank. Save a portion of the water as a blank. Take 200 ml directly from the wash bottle being used and place it in a plastic sample container labeled ''H_2O blank.''

8.6.2 Filter. Save two filters from each lot of filters used in sampling. Place these filters in a container labeled ''filter blank.''

8.7 Post-test Glassware Rinsing. If an additional test is desired, the glassware can be carefully double rinsed with water and reassembled. However, if the glassware is out of use more than 2 days, repeat the initial acid wash procedure.

9.0 Quality Control

9.1 Miscellaneous Quality Control Measures.

Section	Quality control measure	Effect
8.4, 10.1	Sampling equipment leak checks and calibration.	Ensure accuracy and precision of sampling measurements.
10.2	Spectrophotometer calibration	Ensure linearity of spectrophotometer response to standards.
11.5	Check for matrix effects	Eliminate matrix effects.
11.6	Audit sample analysis	Evaluate analyst's technique and standards preparation.

9.2 Volume Metering System Checks. Same as Method 5, Section 9.2.

10.0 Calibration and Standardization

NOTE: Maintain a laboratory log of all calibrations.

10.1 Sampling Equipment. Same as Method 5, Section 10.0.

10.2 Preparation of Standard Solutions. Pipet 1, 3, 5, 8, and 10 ml of the 1.0 µg Be/ml working standard solution into separate 100 ml volumetric flasks, and dilute to the mark with water. The total amounts of Be in these standards are 1, 3, 5, 8, and 10 µg, respectively.

10.3 Spectrophotometer and Recorder. The Be response may be measured by either peak height or peak area. Analyze an aliquot of the 10-µg standard at 234.8 nm using a nitrous oxide/acetylene flame. Determine the maximum absorbance of the standard, and set this value to read 90 percent of the recorder full scale.

10.4 Calibration Curve.

10.4.1 After setting the recorder scale, analyze an appropriately sized aliquot of each standard and the BLANK (see Section 11) until two consecutive peaks agree within 3 percent of their average value.

10.4.3 Subtract the average peak height (or peak area) of the blank—which must be less than 2 percent of recorder full scale—from the averaged peak heights of the standards. If the blank absorbance is greater than 2 percent of full-scale, the probable cause is Be contamination of a reagent or carry-over of Be from a previous sample. Prepare the calibration curve by plotting the corrected peak height of each standard solution versus the corresponding total Be weight in the standard (in µg).

10.5 Spectrophotometer Calibration Quality Control. Calculate the least squares slope of the calibration curve. The line must pass through the origin or through a point no further from the origin than ±2 percent of the recorder full scale. Multiply the corrected peak height by the reciprocal of the least squares slope to determine the distance each calibration point lies from the theoretical calibration line. The difference between the calculated concentration values and the actual concentrations (i.e., 1, 3, 5, 8, and 10 µg Be) must be less than 7 percent for all standards.

11.0 Analytical Procedure

11.1 Sample Loss Check. Prior to analysis, check the liquid level in Container No. 2. Note on the analytical data sheet whether leakage occurred during transport. If a noticeable amount of leakage occurred, either void the sample or take steps, subject to the approval of the Administrator, to adjust the final results.

11.2 Glassware Cleaning. Before use, clean all glassware according to the procedure of Section 8.3.1.

11.3 Sample Preparation. The digestion of Be samples is accomplished in part in concentrated $HClO_4$.

NOTE: The sample must be heated to light brown fumes after the initial HNO3 addition; otherwise, dangerous perchlorates may result from the subsequent $HClO_4$ digestion. $HClO_4$ should be used only under a hood.

11.3.1 Container No. 1. Transfer the filter and any loose particulate matter from Container No. 1 to a 150-ml beaker. Add 35 ml concentrated HNO_3. To oxidize all organic matter, heat on a hotplate until light brown fumes are evident. Cool to room temperature, and add 5 ml 12 N H_2SO_4 and 5 ml concentrated $HClO_4$.

11.3.2 Container No. 2. Place a portion of the water and acetone sample into a 150 ml beaker, and put on a hotplate. Add portions of the remainder as evaporation proceeds and evaporate to dryness. Cool the residue, and add 35 ml concentrated HNO_3. To oxidize all organic matter, heat on a hotplate until light brown fumes are evident. Cool to room temperature, and add 5 ml 12 N H_2SO_4 and 5 ml concentrated $HClO_4$. Then proceed with step 11.3.4.

11.3.3 Final Sample Preparation. Add the sample from Section 11.3.2 to the 150-ml beaker from Section 11.3.1. Replace on a hotplate, and evaporate to dryness in a $HClO_4$ hood. Cool the residue to room temperature, add 10.0 ml of 25 percent V/V HCl, and mix to dissolve the residue.

11.3.4 Filter and Water Blanks. Cut each filter into strips, and treat each filter individually as directed in Section 11.3.1. Treat the 200-ml water blank as directed in Section 11.3.2. Combine and treat these blanks as directed in Section 11.3.3.

11.4 Spectrophotometer Preparation. Turn on the power; set the wavelength, slit width, and lamp current; and adjust the background corrector as instructed by the manufacturer's manual for the particular atomic absorption spectrophotometer. Adjust the burner and flame characteristics as necessary.

11.5 Analysis. Calibrate the analytical equipment and develop a calibration curve as outlined in Sections 10.4 and 10.5.

11.5.1 Beryllium Samples. Repeat the procedure used to establish the calibration curve with an appropriately sized aliquot of each sample (from Section 11.3.3) until two consecutive peak heights agree within 3 percent of their average value. The peak height of each sample must be greater than 10 percent of the recorder full scale. If the peak height of the sample is off scale on the recorder, further dilute the original source sample to bring the Be concentration into the calibration range of the spectrophotometer.

11.5.2 Run a blank and standard at least after every five samples to check the spectrophotometer calibration. The peak height of the blank must pass through a point no further from the origin than ±2 percent of the recorder full scale. The difference between the measured concentration of the standard (the product of the corrected peak height and the reciprocal of the least squares slope) and the actual concentration of the standard must be less than 7 percent, or recalibration of the analyzer is required.

11.5.3 Check for Matrix Effects (optional). Use the Method of Standard Additions (see Reference 2 in Section 16.0) to check at least one sample from each source for matrix effects on the Be results. If the results of the Method of Standard Additions procedure used on the single source sample do not agree to within 5 percent of the value obtained by the routine atomic absorption analysis, then reanalyze all samples from the source using the Method of Standard Additions procedure.

11.6 Container No. 2 (Silica Gel). Weigh the spent silica gel (or silica gel plus impinger) to the nearest 0.5 g using a balance. (This step may be conducted in the field.)

12.0 Data Analysis and Calculations

Carry out calculations, retaining at least one extra decimal significant figure beyond that of the acquired data. Round off figures only after the final calculation. Other forms of the equations may be used as long as they give equivalent results.

12.1 Nomenclature.

K_1 = 0.3858 °K/mm Hg for metric units.
= 17.64 °R/in. Hg for English units.

$K_3 = 10^{-6}$ g/μg for metric units.
$= 2.2046 \times 10^{-9}$ lb/μg for English units.

m_{Be} = Total weight of beryllium in the source sample.

P_s = Absolute stack gas pressure, mm Hg (in. Hg).

t = Daily operating time, sec/day.

T_s = Absolute average stack gas temperature, °K (°R).

$V_{m(std)}$ = Dry gas sample volume at standard conditions, scm (scf).

$V_{w(std)}$ = Volume of water vapor at standard conditions, scm (scf).

12.2 Average Dry Gas Meter Temperature and Average Orifice Pressure Drop, Dry Gas Volume, Volume of Water Vapor Condensed, Moisture Content, Isokinetic Variation, and Stack Gas Velocity and Volumetric Flow Rate. Same as Method 5, Sections 12.2 through 12.5, 12.11, and 12.12, respectively.

12.3 Total Beryllium. For each source sample, correct the average maximum absorbance of the two consecutive samples whose peak heights agree within 3 percent of

their average for the contribution of the solution blank (see Sections 11.3.4 and 11.5.2). Correcting for any dilutions if necessary, use the calibration curve and these corrected averages to determine the total weight of Be in each source sample.

12.4 Beryllium Emission Rate. Calculate the daily Hg emission rate, R, using Equation 104–1. For continuous operations, the operating time is equal to 86,400 seconds per day. For cyclic operations, use only the time per day each stack is in operation. The total Hg emission rate from a source will be the summation of results from all stacks.

$$R = \frac{K_1 K_3 t m_{Be} P_s v_s A_s}{T_s\left(V_{m(std)} + V_{w(std)}\right)} \qquad \text{Eq. 104-1}$$

12.5 Determination of Compliance. Each performance test consists of three sample runs. For the purpose of determining compliance with an applicable national emission standard, use the average of the results of all sample runs.

13.0 Method Performance. [Reserved]

14.0 Pollution Prevention. [Reserved]

15.0 Waste Management. [Reserved]

16.0 References

Same as References 1, 2, and 4–11 of Section 16.0 of Method 101 with the addition of the following:

1. Amos, M.D., and J.B. Willis. Use of High-Temperature Pre-Mixed Flames in Atomic Absorption Spectroscopy. Spectrochim. Acta. 22:1325. 1966.

2. Fleet, B., K.V. Liberty, and T. S. West. A Study of Some Matrix Effects in the Determination of Beryllium by Atomic Absorption Spectroscopy in the Nitrous Oxide-Acetylene Flame. Talanta 17:203. 1970.

17.0 Tables, Diagrams, Flowcharts, And Validation Data [Reserved]

METHOD 105—DETERMINATION OF MERCURY IN WASTEWATER TREATMENT PLANT SEWAGE SLUDGES

NOTE: This method does not include all of the specifications (*e.g.*, equipment and supplies) and procedures (*e.g.*, sampling and analytical) essential to its performance. Some material is incorporated by reference from other methods in this part. Therefore, to obtain reliable results, persons using this method should also have a thorough knowledge of at least the following additional test methods: Method 101 and Method 101A.

1.0 Scope and Application

1.1 Analytes.

Analyte	CAS No.	Sensitivity
Mercury (Hg)	7439–97–6	Dependent upon spectrophotometer and recorder.

1.2 Applicability. This method is applicable for the determination of total organic and inorganic Hg content in sewage sludges.

1.3 Data Quality Objectives. Adherence to the requirements of this method will enhance the quality of the data obtained from air pollutant sampling methods.

2.0 Summary of Method

2.1 Time-composite sludge samples are withdrawn from the conveyor belt subsequent to dewatering and before incineration or drying. A weighed portion of the sludge is digested in aqua regia and is oxidized by potassium permanganate ($KMnO_4$). Mercury in the digested sample is then measured by the conventional spectrophotometric cold-vapor technique.

3.0 Definitions [Reserved]

4.0 Interferences [Reserved]

5.0 Safety

5.1 Disclaimer. This method may involve hazardous materials, operations, and equipment. This test method may not address all of the safety problems associated with its use. It is the responsibility of the user of this test method to establish appropriate safety and health practices and determine the applicability of regulatory limitations prior to performing this test method.

5.2 Corrosive Reagents. The following reagents are hazardous. Personal protective equipment and safe procedures are useful in preventing chemical splashes. If contact occurs, immediately flush with copious

amounts of water at least 15 minutes. Remove clothing under shower and decontaminate. Treat residual chemical burn as thermal burn.

5.2.1 Hydrochloric Acid (HCl). Highly toxic. Vapors are highly irritating to eyes, skin, nose, and lungs, causing severe damage. May cause bronchitis, pneumonia, or edema of lungs. Exposure to concentrations of 0.13 to 0.2 percent can be lethal to humans in a few minutes. Provide ventilation to limit exposure. Reacts with metals, producing hydrogen gas.

5.2.2 Nitric Acid (HNO_3). Highly corrosive to eyes, skin, nose, and lungs. Vapors cause bronchitis, pneumonia, or edema of lungs. Reaction to inhalation may be delayed as long as 30 hours and still be fatal. Provide ventilation to limit exposure. Strong oxidizer. Hazardous reaction may occur with organic materials such as solvents.

6.0 Equipment and Supplies

6.1 Sample Collection and Mixing. The following items are required for collection and mixing of the sludge samples:

6.1.1 Container. Plastic, 50-liter.

6.1.2 Scoop. To remove 950-ml (1 quart.) sludge sample.

6.1.3 Mixer. Mortar mixer, wheelbarrow-type, 57-liter (or equivalent) with electricity-driven motor.

6.1.4 Blender. Waring-type, 2-liter.

6.1.5 Scoop. To remove 100-ml and 20-ml samples of blended sludge.

6.1.6 Erlenmeyer Flasks. Four, 125-ml.

6.1.7 Beakers. Glass beakers in the following sizes: 50 ml (1), 200 ml (1), 400 ml (2).

6.2 Sample Preparation and Analysis. Same as Method 101, Section 6.3, with the addition of the following:

6.2.1 Hot Plate.

6.2.2 Desiccator.

6.2.3 Filter Paper. S and S No. 588 (or equivalent).

6.2.4 Beakers. Glass beakers, 200 ml and 400 ml (2 each).

7.0 Reagents and Standards

NOTE: Unless otherwise indicated, it is intended that all reagents conform to the specifications established by the Committee on Analytical Reagents of the American Chemical Society, where such specifications are available; otherwise, use the best available grade.

7.1 Sample Analysis. Same as Method 101A, Section 7.2, with the following additions and exceptions:

7.1.1 Hydrochloric Acid. The concentrated HCl specified in Method 101A, Section 7.2.4, is not required.

7.1.2 Aqua Regia. Prepare immediately before use. Carefully add one volume of concentrated HNO_3 to three volumes of concentrated HCl.

8.0 Sample Collection, Preservation, Storage, and Transport

8.1 Sludge Sampling. Withdraw equal volume increments of sludge [for a total of at least 15 liters (16 quarts)] at intervals of 30 min over an 8-hr period, and combine in a rigid plastic container.

8.2 Sludge Mixing. Transfer the entire 15-liter sample to a mortar mixer. Mix the sample for a minimum of 30 min at 30 rpm. Take six 100-ml portions of sludge, and combine in a 2-liter blender. Blend sludge for 5 min; add water as necessary to give a fluid consistency. Immediately after stopping the blender, withdraw four 20-ml portions of blended sludge, and place them in separate, tared 125-ml Erlenmeyer flasks. Reweigh each flask to determine the exact amount of sludge added.

8.3 Sample Holding Time. Samples shall be analyzed within the time specified in the applicable subpart of the regulations.

9.0 Quality Control

Section	Quality control measure	Effect
10.0	Spectrophotometer calibration	Ensure linearity of spectrophotometer response to standards.
11.0	Check for matrix effects	Eliminate matrix effects.

10.0 Calibration and Standardization

Same as Method 101A, Section 10.2.

11.0 Analytical Procedures

11.1 Solids Content of Blended Sludge. Dry one of the 20-ml blended samples from Section 8.2 in an oven at 105 °C (221 °F) to constant weight. Cool in a desiccator, weigh and record the dry weight of the sample.

11.2 Aqua Regia Digestion of Blended Samples.

11.2.1 To each of the three remaining 20-ml samples from Section 8.2 add 25 ml of aqua regia, and digest the on a hot plate at low heat (do not boil) for 30 min, or until samples are a pale yellow-brown color and are void of the dark brown color characteristic of organic matter. Remove from hotplate and allow to cool.

11.2.2 Filter each digested sample separately through an S and S No. 588 filter or equivalent, and rinse the filter contents with 50 ml of water. Transfer the filtrate and filter washing to a 100-ml volumetric flask, and carefully dilute to volume with water.

11.3 Solids Content of the Sludge Before Blending. Remove two 100-ml portions of

mixed sludge from the mortar mixer and place in separate, tared 400-ml beakers. Reweigh each beaker to determine the exact amount of sludge added. Dry in oven at 105 °C (221 °F) and cool in a desiccator to constant weight.

11.4 Analysis for Mercury. Analyze the three aqua regia-digested samples using the procedures outlined in Method 101A, Section 11.0.

12.0 Data Analysis and Calculations

12.1 Nomenclature.

C_m = Concentration of Hg in the digested sample, µg/g.

F_{sb} = Weight fraction of solids in the blended sludge.

F_{sm} = Weight fraction of solids in the collected sludge after mixing.

M = Hg content of the sewage sludge (on a dry basis), µg/g.

m = Mass of Hg in the aliquot of digested sample analyzed, µg.

n = number of digested samples (specified in Section 11.2 as three).

V_a = Volume of digested sample analyzed, ml.

V_s = Volume of digested sample, ml.

W_b = Weight of empty sample beaker, g.

W_{bs} = Weight of sample beaker and sample, g.

W_{bd} = Weight of sample beaker and sample after drying, g.

W_f = Weight of empty sample flask, g.

W_{fd} = Weight of sample flask and sample after drying, g.

W_{fs} = Weight of sample flask and sample, g.

12.2 Mercury Content of Digested Sample (Wet Basis).

12.2.1 For each sample analyzed for Hg content, calculate the arithmetic mean maximum absorbance of the two consecutive samples whose peak heights agree ±3 percent of their average. Correct this average value for the contribution of the blank. Use the calibration curve and these corrected averages to determine the final Hg concentration in the solution cell for each sludge sample.

12.2.2 Calculate the average Hg concentration of the digested samples by correcting for any dilutions made to bring the sample into the working range of the spectrophotometer and for the weight of the sludge portion digested, using Equation 105–1.

$$\overline{C}_m = \sum_{i=1}^{n}\left[\frac{mV_s}{V_a\left(W_{fs} - W_f\right)}\right]_i \qquad \text{Eq. 105-1}$$

12.3 Solids Content of Blended Sludge. Determine the solids content of the blended sludge using Equation 105–2.

$$F_{sb} = 1 - \frac{W_{fs} - W_{fd}}{W_{fs} - W_f} \qquad \text{Eq. 105-2}$$

12.4 Solids Content of Bulk Sample (before blending but, after mixing in mortar mixer). Determine the solids content of each 100 ml aliquot (Section 11.3), and average the results.

$$F_{sm} = 1 - \frac{W_{bs} - W_{bd}}{W_{bs} - W_b} \qquad \text{Eq. 105-3}$$

12.5 Mercury Content of Bulk Sample (Dry Basis). Average the results from the three samples from each 8-hr composite sample, and calculate the Hg concentration of the composite sample on a dry basis.

$$M = \frac{\overline{C}_m}{F_{sb}} \qquad \text{Eq. 105-4}$$

13.0 Method Performance

13.1 Range. The range of this method is 0.2 to 5 micrograms per gram; it may be extended by increasing or decreasing sample size.

14.0 Pollution Prevention. [Reserved]

15.0 Waste Management. [Reserved]

16.0 References

1. Bishop, J.N. Mercury in Sediments. Ontario Water Resources Commission. Toronto, Ontario, Canada. 1971.

2. Salma, M. Private Communication. EPA California/Nevada Basin Office. Alameda, California.

3. Hatch, W.R. and W.L. Ott. Determination of Sub-Microgram Quantities of Mercury by Atomic Absorption Spectrophotometry. Analytical Chemistry. 40:2085. 1968.

4. Bradenberger, H., and H. Bader. The Determination of Nanogram Levels of Mercury in Solution by a Flameless Atomic Absorption Technique. Atomic Absorption Newsletter. 6:101. 1967.

5. Analytical Quality Control Laboratory (AQCL). Mercury in Sediment (Cold Vapor Technique) (Provisional Method). U.S. Environmental Protection Agency. Cincinnati, Ohio. April 1972.

6. Kopp, J.F., M.C. Longbottom, and L.B. Lobring. ''Cold Vapor'' Method for Determining Mercury. Journal AWWA. 64(1):20–25. 1972.

7. Manual of Methods for Chemical Analysis of Water and Wastes. U.S. Environmental Protection Agency. Cincinnati, Ohio. Publication No. EPA–624/2–74–003. December 1974. pp. 118–138.

8. Mitchell, W.J., M.R. Midgett, J. Suggs, R.J. Velton, and D. Albrink. Sampling and Homogenizing Sewage for Analysis. Environmental Monitoring and Support Laboratory, Office of Research and Development, U.S. Environmental Protection Agency. Research Triangle Park, N.C. March 1979. p. 7.

17.0 Tables, Diagrams, Flowcharts, and Validation Data. [Reserved]

METHOD 106—DETERMINATION OF VINYL CHLORIDE EMISSIONS FROM STATIONARY SOURCES

1.0 Scope and Application

1.1 Analytes.

Analyte	CAS No.	Sensitivity
Vinyl Chloride (CH_2:CHCl)	75–01–4	Dependent upon analytical equipment.

1.2 Applicability. This method is applicable for the determination of vinyl chloride emissions from ethylene dichloride, vinyl chloride, and polyvinyl chloride manufacturing processes. This method does not measure vinyl chloride contained in particulate matter.

1.3 Data Quality Objectives. Adherence to the requirements of this method will enhance the quality of the data obtained from air pollutant sampling methods.

2.0 Summary of Method

2.1 An integrated bag sample of stack gas containing vinyl chloride is subjected to GC analysis using a flame ionization detector (FID).

3.0 Definitions. [Reserved]

4.0 Interferences

4.1 Resolution interferences of vinyl chloride may be encountered on some sources. Therefore, the chromatograph operator should select the column and operating parameters best suited to the particular analysis requirements. The selection made is subject to approval of the Administrator. Approval is automatic, provided that confirming data are produced through an adequate supplemental analytical technique, and that the data are available for review by the Administrator. An example of this would be analysis with a different column or GC/mass spectroscopy.

5.0 Safety

5.1 Disclaimer. This method may involve hazardous materials, operations, and equipment. This test method may not address all of the safety problems associated with its use. It is the responsibility of the user of this test method to establish appropriate safety and health practices and determine the applicability of regulatory limitations prior to performing this test method.

5.2 Toxic Analyte. Care must be exercised to prevent exposure of sampling personnel to vinyl chloride, which is a carcinogen.

6.0 Equipment and Supplies

6.1 Sample Collection (see Figure 106–1). The sampling train consists of the following components:

6.1.1 Probe. Stainless steel, borosilicate glass, Teflon tubing (as stack temperature permits), or equivalent, equipped with a glass wool plug to remove particulate matter.

6.1.2 Sample Lines. Teflon, 6.4-mm outside diameter, of sufficient length to connect probe to bag. Use a new unused piece for each series of bag samples that constitutes an emission test, and discard upon completion of the test.

6.1.3 Quick Connects. Stainless steel, male (2) and female (2), with ball checks (one pair without), located as shown in Figure 106–1.

6.1.4 Tedlar Bags. 50- to 100-liter capacity, to contain sample. Aluminized Mylar bags may be used if the samples are analyzed within 24 hours of collection.

6.1.5 Bag Containers. Rigid leak-proof containers for sample bags, with covering to protect contents from sunlight.

6.1.6 Needle Valve. To adjust sample flow rates.

6.1.7 Pump. Leak-free, with minimum of 2-liter/min capacity.

6.1.8 Charcoal Tube. To prevent admission of vinyl chloride and other organics to the atmosphere in the vicinity of samplers.

6.1.9 Flowmeter. For observing sampling flow rate; capable of measuring a flow range from 0.10 to 1.00 liter/min.

6.1.10 Connecting Tubing. Teflon, 6.4-mm outside diameter, to assemble sampling train (Figure 106–1).

6.1.11 Tubing Fittings and Connectors. Teflon or stainless steel, to assemble sampling training.

6.2 Sample Recovery. Teflon tubing, 6.4-mm outside diameter, to connect bag to GC sample loop. Use a new unused piece for each series of bag samples that constitutes an emission test, and discard upon conclusion of analysis of those bags.

6.3 Analysis. The following equipment is required:

6.3.1 Gas Chromatograph. With FID potentiometric strip chart recorder and 1.0 to 5.0-ml heated sampling loop in automatic sample valve. The chromatographic system shall be capable of producing a response to 0.1-ppmv vinyl chloride that is at least as great as the average noise level. (Response is measured from the average value of the base line to the maximum of the wave form, while standard operating conditions are in use.)

6.3.2 Chromatographic Columns. Columns as listed below. Other columns may be used provided that the precision and accuracy of the analysis of vinyl chloride standards are not impaired and that information is available for review confirming that there is adequate resolution of vinyl chloride peak. (Adequate resolution is defined as an area overlap of not more than 10 percent of the vinyl chloride peak by an interferent peak. Calculation of area overlap is explained in Procedure 1 of appendix C to this part: ''Determination of Adequate Chromatographic Peak Resolution.'')

6.3.2.1 Column A. Stainless steel, 2.0 m by 3.2 mm, containing 80/100-mesh Chromasorb 102.

6.3.2.2 Column B. Stainless steel, 2.0 m by 3.2 mm, containing 20 percent GE SF–96 on 60/ip-mesh Chromasorb P AW; or stainless steel, 1.0 m by 3.2 mm containing 80/100-mesh Porapak T. Column B is required as a secondary column if acetaldehyde is present. If used, column B is placed after column A. The combined columns should be operated at 120 °C (250 °F).

6.3.3 Rate Meters (2). Rotameter , or equivalent, 100-ml/min capacity, with flow control valves.

6.3.4 Gas Regulators. For required gas cylinders.

6.3.5 Temperature Sensor. Accurate to ±1 °C (±2 °F), to measure temperature of heated sample loop at time of sample injection.

6.3.6 Barometer. Accurate to ±5 mm Hg, to measure atmospheric pressure around GC during sample analysis.

6.3.7 Pump. Leak-free, with minimum of 100-ml/min capacity.

6.3.8 Recorder. Strip chart type, optionally equipped with either disc or electronic integrator.

6.3.9 Planimeter. Optional, in place of disc or electronic integrator on recorder, to measure chromatograph peak areas.

6.4 Calibration and Standardization.

6.4.1 Tubing. Teflon, 6.4-mm outside diameter, separate pieces marked for each calibration concentration.

NOTE: The following items are required only if the optional standard gas preparation procedures (Section 10.1) are followed.

6.4.2 Tedlar Bags. Sixteen-inch-square size, with valve; separate bag marked for each calibration concentration.

6.4.3 Syringes. 0.5-ml and 50-µl, gas tight, individually calibrated to dispense gaseous vinyl chloride.

6.4.4 Dry Gas Meter with Temperature and Pressure Gauges. Singer Model DTM–115 with 802 index, or equivalent, to meter nitrogen in preparation of standard gas mixtures, calibrated at the flow rate used to prepare standards.

7.0 Reagents and Standards

7.1 Analysis. The following reagents are required for analysis.

7.1.1 Helium or Nitrogen. Purity 99.9995 percent or greater, for chromatographic carrier gas.

7.1.2 Hydrogen. Purity 99.9995 percent or greater.

7.1.3 Oxygen or Air. Either oxygen (purity 99.99 percent or greater) or air (less than 0.1 ppmv total hydrocarbon content), as required by detector.

7.2 Calibration. Use one of the following options: either Sections 7.2.1 and 7.2.2, or Section 7.2.3.

7.2.1 Vinyl Chloride. Pure vinyl chloride gas certified by the manufacturer to contain a minimum of 99.9 percent vinyl chloride. If the gas manufacturer maintains a bulk cylinder supply of 99.9+ percent vinyl chloride, the certification analysis may have been performed on this supply, rather than on each gas cylinder prepared from this bulk supply. The date of gas cylinder preparation and the certified analysis must have been affixed to the cylinder before shipment from the gas manufacturer to the buyer.

7.2.2 Nitrogen. Same as described in Section 7.1.1.

7.2.3 Cylinder Standards. Gas mixture standards (50-,10-, and 5 ppmv vinyl chloride) in nitrogen cylinders may be used to directly prepare a chromatograph calibration curve as described in Section 10.3 if the following conditions are met: (a) The manufacturer certifies the gas composition with an accuracy of ±3 percent or better. (b) The manufacturer recommends a maximum shelf life over which the gas concentration does not change by greater than ±5 percent from the certified value. (c) The manufacturer affixes the date of gas cylinder preparation, certified vinyl chloride concentration, and recommended maximum shelf to the cylinder before shipment to the buyer.

7.2.3.1 Cylinder Standards Certification. The manufacturer shall certify the concentration of vinyl chloride in nitrogen in each cylinder by (a) directly analyzing each cylinder and (b) calibrating his analytical procedure on the day of cylinder analysis. To calibrate his analytical procedure, the manufacturer shall use as a minimum, a three point calibration curve. It is recommended that the manufacturer maintain (1) a high concentration calibration standard (between 50 and 100 ppmv) to prepare his calibration curve by an appropriate dilution technique and (2) a low-concentration calibration standard (between 5 and 10 ppmv) to verify the dilution technique used. If the difference between the apparent concentration read from the calibration curve and the true concentration assigned to the low-concentration calibration standard exceeds 5 percent of the true concentration, the manufacturer shall determine the source of error and correct it, then repeat the three-point calibration.

7.2.3.2 Verification of Manufacturer's Calibration Standards. Before using a standard, the manufacturer shall verify each calibration standard (a) by comparing it to gas mixtures prepared (with 99 mole percent vinyl chloride) in accordance with the procedure described in Section 7.2.1 or (b) calibrating it against vinyl chloride cylinder Standard Reference Materials (SRM's) prepared by the National Institute of Standards and Technology, if such SRM's are available. The agreement between the initially determined concentration value and the verification concentration value must be ±5 percent. The manufacturer must reverify all calibration standards on a time interval consistent with the shelf life of the cylinder standards sold.

7.2.4 Audit Cylinder Standards.

7.2.4.1 Gas mixture standards with concentrations known only to the person supervising the analysis of samples. The concentrations of the audit cylinders should be: one low-concentration cylinder in the range of 5 to 20 ppmv vinyl chloride and one high-concentration cylinder in the range of 20 to 50 ppmv. When available, obtain audit samples from the appropriate EPA Regional Office or from the responsible enforcement authority.

NOTE: The responsible enforcement agency should be notified at least 30 days prior to the test date to allow sufficient time for sample delivery.

7.2.4.2 Alternatively, audit cylinders obtained from a commercial gas manufacturer may be used provided: (a) the gas meets the conditions described in Section 7.2.3, (b) the gas manufacturer certifies the audit cylinder as described in Section 7.2.3.1, and (c) the gas manufacturer obtains an independent analysis of the audit cylinders to verify this analysis. Independent analysis is defined here to mean analysis performed by an individual different than the individual who performs the gas manufacturer's analysis, while using calibration standards and analysis equipment different from those used for the gas manufacturer's analysis. Verification is complete and acceptable when the independent analysis concentration is within 5 percent of the gas manufacturer's concentration.

8.0 Sample Collection, Preservation, Storage, and Transport

NOTE: Performance of this method should not be attempted by persons unfamiliar with the operation of a gas chromatograph (GC) nor by those who are unfamiliar with source sampling, because knowledge beyond the scope of this presentation is required.

8.1 Bag Leak-Check. The following leak-check procedure is recommended, but not required, prior to sample collection. The post-test leak-check procedure is mandatory. Connect a water manometer and pressurize the bag to 5 to 10 cm H_2O (2 to 4 in. H_2O).

Allow to stand for 10 min. Any displacement in the water manometer indicates a leak. Also, check the rigid container for leaks in this manner.

NOTE: An alternative leak-check method is to pressurize the bag to 5 to 10 cm H2O and allow it to stand overnight. A deflated bag indicates a leak. For each sample bag in its rigid container, place a rotameter in line between the bag and the pump inlet. Evacuate the bag. Failure of the rotameter to register zero flow when the bag appears to be empty indicates a leak.

8.2 Sample Collection. Assemble the sample train as shown in Figure 106–1. Join the quick connects as illustrated, and determine that all connection between the bag and the probe are tight. Place the end of the probe at the centroid of the stack and start the pump with the needle valve adjusted to yield a flow that will fill over 50 percent of bag volume in the specific sample period. After allowing sufficient time to purge the line several times, change the vacuum line from the container to the bag and evacuate the bag until the rotameter indicates no flow. Then reposition the sample and vacuum lines and begin the actual sampling, keeping the rate proportional to the stack velocity. At all times, direct the gas exiting the rotameter away from sampling personnel. At the end of the sample period, shut off the pump, disconnect the sample line from the bag, and disconnect the vacuum line from the bag container. Protect the bag container from sunlight.

8.3 Sample Storage. Keep the sample bags out of direct sunlight. When at all possible, analysis is to be performed within 24 hours, but in no case in excess of 72 hours of sample collection. Aluminized Mylar bag samples must be analyzed within 24 hours.

8.4 Post-test Bag Leak-Check. Subsequent to recovery and analysis of the sample, leak-check the sample bag according to the procedure outlined in Section 8.1.

9.0 Quality Control

9.1 Miscellaneous Quality Control

Section	Quality control measure	Effect
10.3	Chromatograph calibration	Ensure precision and accuracy of chromatograph.
11.1	Audit sample analysis	Evaluate analytical technique and standards preparation.

9.2 Immediately after the preparation of the calibration curve and prior to the sample analyses, perform the analysis audit described in appendix C, Procedure 2: ''Procedure for Field Auditing GC Analysis.''

10.0 Calibration and Standardization

NOTE: Maintain a laboratory log of all calibrations.

10.1 Preparation of Vinyl Chloride Standard Gas Mixtures. (Optional Procedure-delete if cylinder standards are used.) Evacuate a 16-inch square Tedlar bag that has passed a leak-check (described in Section 8.1) and meter in 5.0 liters of nitrogen. While the bag is filling, use the 0.5-ml syringe to inject 250 µl of 99.9+ percent vinyl chloride gas through the wall of the bag. Upon withdrawing the syringe, immediately cover the resulting hole with a piece of adhesive tape. The bag now contains a vinyl chloride concentration of 50 ppmv. In a like manner use the 50 µl syringe to prepare gas mixtures having 10-and 5-ppmv vinyl chloride concentrations. Place each bag on a smooth surface and alternately depress opposite sides of the bag 50 times to further mix the gases. These gas mixture standards may be used for 10 days from the date of preparation, after which time new gas mixtures must be prepared. (Caution: Contamination may be a problem when a bag is reused if the new gas mixture standard is a lower concentration than the previous gas mixture standard.)

10.2 Determination of Vinyl Chloride Retention Time. (This section can be performed simultaneously with Section 10.3.) Establish chromatograph conditions identical with those in Section 11.3. Determine proper attenuator position. Flush the sampling loop with helium or nitrogen and activate the sample valve. Record the injection time, sample loop temperature, column temperature, carrier gas flow rate, chart speed, and attenuator setting. Record peaks and detector responses that occur in the absence of vinyl chloride. Maintain conditions with the equipment plumbing arranged identically to Section 11.2, and flush the sample loop for 30 seconds at the rate of 100 ml/min with one of the vinyl chloride calibration mixtures. Then activate the sample valve. Record the injection time. Select the peak that corresponds to vinyl chloride. Measure the distance on the chart from the injection time to the time at which the peak maximum occurs. This quantity divided by the chart speed is defined as the retention time. Since other organics may be present in the sample, positive identification of the vinyl chloride peak must be made.

10.3 Preparation of Chromatograph Calibration Curve. Make a GC measurement of each gas mixture standard (described in Section 7.2.3 or 10.1) using conditions identical to those listed in Sections 11.2 and 11.3. Flush the sampling loop for 30 seconds at the rate of 100 ml/min with one of the standard mixtures, and activate the sample valve.

Record the concentration of vinyl chloride injected (C_c), attenuator setting, chart speed, peak area, sample loop temperature, column temperature, carrier gas flow rate, and retention time. Record the barometric pressure. Calculate A_c, the peak area multiplied by the attenuator setting. Repeat until two consecutive injection areas are within 5 percent, then plot the average of those two values versus C_c. When the other standard gas mixtures have been similarly analyzed and plotted, draw a straight line through the points derived by the least squares method. Perform calibration daily, or before and after the analysis of each emission test set of bag samples, whichever is more frequent. For each group of sample analyses, use the average of the two calibration curves which bracket that group to determine the respective sample concentrations. If the two calibration curves differ by more than 5 percent from their mean value, then report the final results by both calibration curves.

11.0 Analytical Procedure

11.1 Audit Sample Analysis. Immediately after the preparation of the calibration curve and prior to the sample analyses, perform the analysis audit described in Procedure 2 of appendix C to this part: ''Procedure for Field Auditing GC Analysis.''

11.2 Sample Recovery. With a new piece of Teflon tubing identified for that bag, connect a bag inlet valve to the gas chromatograph sample valve. Switch the valve to receive gas from the bag through the sample loop. Arrange the equipment so the sample gas passes from the sample valve to 100-ml/min rotameter with flow control valve followed by a charcoal tube and a 1-in. H_2O pressure gauge. Maintain the sample flow either by a vacuum pump or container pressurization if the collection bag remains in the rigid container. After sample loop purging is ceased, allow the pressure gauge to return to zero before activating the gas sampling valve.

11.3 Analysis.

11.3.1 Set the column temperature to 100 °C (210 °F) and the detector temperature to 150 °C (300 °F). When optimum hydrogen and oxygen (or air) flow rates have been determined, verify and maintain these flow rates during all chromatography operations. Using helium or nitrogen as the carrier gas, establish a flow rate in the range consistent with the manufacturer's requirements for satisfactory detector operation. A flow rate of approximately 40 ml/min should produce adequate separations. Observe the base line periodically and determine that the noise level has stabilized and that base line drift has ceased. Purge the sample loop for 30 seconds at the rate of 100 ml/min, shut off flow, allow the sample loop pressure to reach atmospheric pressure as indicated by the H_2O manometer, then activate the sample valve. Record the injection time (the position of the pen on the chart at the time of sample injection), sample number, sample loop temperature, column temperature, carrier gas flow rate, chart speed, and attenuator setting. Record the barometric pressure. From the chart, note the peak having the retention time corresponding to vinyl chloride as determined in Section 10.2. Measure the vinyl chloride peak area, A_m, by use of a disc integrator, electronic integrator, or a planimeter. Measure and record the peak heights, H_m. Record A_m and retention time. Repeat the injection at least two times or until two consecutive values for the total area of the vinyl chloride peak agree within 5 percent of their average. Use the average value for these two total areas to compute the bag concentration.

11.3.2 Compare the ratio of H_m to A_m for the vinyl chloride sample with the same ratio for the standard peak that is closest in height. If these ratios differ by more than 10 percent, the vinyl chloride peak may not be pure (possibly acetaldehyde is present) and the secondary column should be employed (see Section 6.3.2.2).

11.4 Determination of Bag Water Vapor Content. Measure the ambient temperature and barometric pressure near the bag. From a water saturation vapor pressure table, determine and record the water vapor content of the bag, B_{wb}, as a decimal figure. (Assume the relative humidity to be 100 percent unless a lesser value is known.)

12.0 Calculations and Data Analysis

12.1 Nomenclature.

A_m = Measured peak area.

A_f = Attenuation factor.

B_{wb} = Water vapor content of the bag sample, as analyzed, volume fraction.

C_b = Concentration of vinyl chloride in the bag, ppmv.

C_c = Concentration of vinyl chloride in the standard sample, ppmv.

P_i = Laboratory pressure at time of analysis, mm Hg.

P_r = Reference pressure, the laboratory pressure recorded during calibration, mm Hg.

T_i = Absolute sample loop temperature at the time of analysis, °K (°R).

T_r = Reference temperature, the sample loop temperature recorded during calibration, °K (°R).

12.2 Sample Peak Area. Determine the sample peak area, A_c, as follows:

$$A_c = A_m A_f \qquad \text{Eq. 106-1}$$

12.3 Vinyl Chloride Concentration. From the calibration curves prepared in Section 10.3, determine the average concentration value of vinyl chloride, C_c, that corresponds to A_c, the sample peak area. Calculate the concentration of vinyl chloride in the bag, C_b, as follows:

$$C_b = \frac{C_c P_r T_i}{P_i T_r \left(1 - B_{wb}\right)} \qquad \text{Eq. 106-2}$$

13.0 Method Performance

13.1 Analytical Range. This method is designed for the 0.1 to 50 parts per million by volume (ppmv) range. However, common gas chromatograph (GC) instruments are capable of detecting 0.02 ppmv vinyl chloride. With proper calibration, the upper limit may be extended as needed.

14.0 Pollution Prevention, [Reserved]

15.0 Waste Management, [Reserved]

16.0 References

1. Brown D.W., E.W. Loy, and M.H. Stephenson. Vinyl Chloride Monitoring Near the B. F. Goodrich Chemical Company in Louisville, KY. Region IV, U.S. Environmental Protection Agency, Surveillance and Analysis Division, Athens, GA. June 24, 1974.

2. G.D. Clayton and Associates. Evaluation of a Collection and Analytical Procedure for Vinyl Chloride in Air. U.S. Environmental Protection Agency, Research Triangle Park, N.C. EPA Contract No. 68–02–1408, Task Order No. 2, EPA Report No. 75–VCL–1. December 13, 1974.

3. Midwest Research Institute. Standardization of Stationary Source Emission Method for Vinyl Chloride. U.S. Environmental Protection Agency, Research Triangle Park, N.C. Publication No. EPA–600/4–77–026. May 1977.

4. Scheil, G. and M.C. Sharp. Collaborative Testing of EPA Method 106 (Vinyl Chloride) that Will Provide for a Standardized Stationary Source Emission Measurement Method. U.S. Environmental Protection Agency, Research Triangle Park, N.C. Publication No. EPA 600/4–78–058. October 1978.

17.0 Tables, Diagrams Flowcharts, and Validation Data.

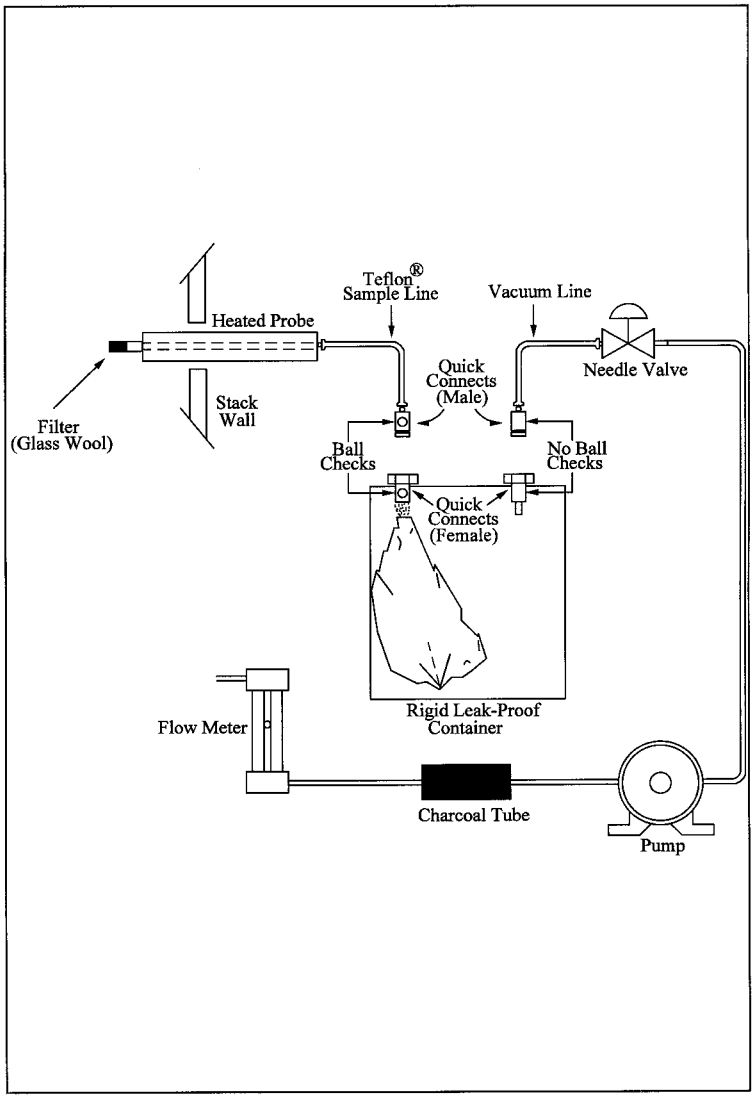

Figure 106-1. Integrated-bag sampling train.

METHOD 107—DETERMINATION OF VINYL CHLORIDE CONTENT OF IN-PROCESS WASTEWATER SAMPLES, AND VINYL CHLORIDE CONTENT OF POLYVINYL CHLORIDE RESIN SLURRY, WET CAKE, AND LATEX SAMPLES

NOTE: Performance of this method should not be attempted by persons unfamiliar with the operation of a gas chromatograph (GC) nor by those who are unfamiliar with source sampling, because knowledge beyond the scope of this presentation is required. This method does not include all of the specifications (*e.g.*, equipment and supplies) and procedures (*e.g.*, sampling and analytical) essential to its performance. Some material is incorporated by reference from other methods in this part. Therefore, to obtain reliable results, persons using this method should have

a thorough knowledge of at least the following additional test methods: Method 106.

1.0 Scope and Application

1.1 Analytes.

Analyte	CAS No.	Sensitivity
Vinyl Chloride (CH_2:CHCl)	75–01–4	Dependent upon analytical equipment.

1.2 Applicability. This method is applicable for the determination of the vinyl chloride monomer (VCM) content of in-process wastewater samples, and the residual vinyl chloride monomer (RCVM) content of polyvinyl chloride (PVC) resins, wet, cake, slurry, and latex samples. It cannot be used for polymer in fused forms, such as sheet or cubes. This method is not acceptable where methods from section 304(h) of the Clean Water Act, 33 U.S.C. 1251 *et seq.* (the Federal Water Pollution Control Amendments of 1972 as amended by the Clean Water Act of 1977) are required.

1.3 Data Quality Objectives. Adherence to the requirements of this method will enhance the quality of the data obtained from air pollutant sampling methods.

2.0 Summary of Method

2.1 The basis for this method relates to the vapor equilibrium that is established at a constant known temperature in a closed system between RVCM, PVC resin, water, and air. The RVCM in a PVC resin will equilibrate rapidly in a closed vessel, provided that the temperature of the PVC resin is maintained above the glass transition temperature of that specific resin.

2.2 A sample of PVC or in-process wastewater is collected in a vial or bottle and is conditioned. The headspace in the vial or bottle is then analyzed for vinyl chloride using gas chromatography with a flame ionization detector.

3.0 Definitions [Reserved]

4.0 Interferences

4.1 The chromatograph columns and the corresponding operating parameters herein described normally provide an adequate resolution of vinyl chloride; however, resolution interferences may be encountered on some sources. Therefore, the chromatograph operator shall select the column and operating parameters best suited to his particular analysis requirements, subject to the approval of the Administrator. Approval is automatic provided that confirming data are produced through an adequate supplemental analytical technique, such as analysis with a different column or GC/mass spectroscopy, and that these data are made available for review by the Administrator.

5.0 Safety

5.1 Disclaimer. This method may involve hazardous materials, operations, and equipment. This test method may not address all of the safety problems associated with its use. It is the responsibility of the user of this test method to establish appropriate safety and health practices and determine the applicability of regulatory limitations prior to performing this test method.

5.2 Toxic Analyte. Care must be exercised to prevent exposure of sampling personnel to vinyl chloride, which is a carcinogen. Do not release vinyl chloride to the laboratory atmosphere during preparation of standards. Venting or purging with VCM/air mixtures must be held to a minimum. When they are required, the vapor must be routed to outside air. Vinyl chloride, even at low ppm levels, must never be vented inside the laboratory. After vials have been analyzed, the gas must be vented prior to removal of the vial from the instrument turntable. Vials must be vented through a hypodermic needle connected to an activated charcoal tube to prevent release of vinyl chloride into the laboratory atmosphere. The charcoal must be replaced prior to vinyl chloride breakthrough.

6.0 Equipment and Supplies

6.1 Sample Collection. The following equipment is required:

6.1.1 Glass bottles. 60-ml (2-oz) capacity, with wax-lined screw-on tops, for PVC samples.

6.1.2 Glass Vials. Headspace vials, with Teflon-faced butyl rubber sealing discs, for water samples.

6.1.3 Adhesive Tape. To prevent loosening of bottle tops.

6.2 Sample Recovery. The following equipment is required:

6.2.1 Glass Vials. Headspace vials, with butyl rubber septa and aluminum caps. Silicone rubber is not acceptable.

6.2.2 Analytical Balance. Capable of determining sample weight within an accuracy of ±1 percent.

6.2.3 Vial Sealer. To seal headspace vials.

6.2.4 Syringe. 100-ml capacity.

6.3 Analysis. The following equipment is required:

6.3.1 Headspace Sampler and Chromatograph. Capable of sampling and analyzing a constant amount of headspace gas from a sealed vial, while maintaining that

vial at a temperature of 90 °C ± 0.5 °C (194 °F ± 0.9 °F). The chromatograph shall be equipped with a flame ionization detector (FID). Perkin-Elmer Corporation Models F–40, F–42, F–45, HS–6, and HS–100, and Hewlett-Packard Corporation Model 19395A have been found satisfactory. Chromatograph backflush capability may be required.

6.3.2 Chromatographic Columns. Stainless steel 1 m by 3.2 mm and 2 m by 3.2 mm, both containing 50/80-mesh Porapak Q. Other columns may be used provided that the precision and accuracy of the analysis of vinyl chloride standards are not impaired and information confirming that there is adequate resolution of the vinyl chloride peak are available for review. (Adequate resolution is defined as an area overlap of not more than 10 percent of the vinyl chloride peak by an interferant peak. Calculation of area overlap is explained in Procedure 1 of appendix C to this part: ''Determination of Adequate Chromatographic Peak Resolution.'') Two 1.83 m columns, each containing 1 percent Carbowax 1500 on Carbopak B, have been found satisfactory for samples containing acetaldehyde.

6.3.3 Temperature Sensor. Range 0 to 100 °C (32 to 212 °F) accurate to 0.1 °C.

6.3.4 Integrator-Recorder. To record chromatograms.

6.3.5 Barometer. Accurate to 1 mm Hg.

6.3.6 Regulators. For required gas cylinders.

6.3.7 Headspace Vial Pre-Pressurizer. Nitrogen pressurized hypodermic needle inside protective shield.

7.0 Reagents and Standards

7.1 Analysis. Same as Method 106, Section 7.1, with the addition of the following:

7.1.1 Water. Interference-free.

7.2 Calibration. The following items are required for calibration:

7.2.1 Cylinder Standards (4). Gas mixture standards (50-, 500-, 2000- and 4000-ppm vinyl chloride in nitrogen cylinders). Cylinder standards may be used directly to prepare a chromatograph calibration curve as described in Section 10.3, if the following conditions are met: (a) The manufacturer certifies the gas composition with an accuracy of ±3 percent or better (see Section 7.2.1.1). (b) The manufacturer recommends a maximum shelf life over which the gas concentration does not change by greater than ±5 percent from the certified value. (c) The manufacturer affixes the date of gas cylinder preparation, certified vinyl chloride concentration, and recommended maximum shelf life to the cylinder before shipment to the buyer.

7.2.1.1 Cylinder Standards Certification. The manufacturer shall certify the concentration of vinyl chloride in nitrogen in each cylinder by (a) directly analyzing each cylinder and (b) calibrating the analytical procedure on the day of cylinder analysis. To calibrate the analytical procedure, the manufacturer shall use, as a minimum, a 3-point calibration curve. It is recommended that the manufacturer maintain (1) a high-concentration calibration standard (between 4000 and 8000 ppm) to prepare the calibration curve by an appropriate dilution technique and (2) a low-concentration calibration standard (between 50 and 500 ppm) to verify the dilution technique used. If the difference between the apparent concentration read from the calibration curve and the true concentration assigned to the low-concentration calibration standard exceeds 5 percent of the true concentration, the manufacturer shall determine the source of error and correct it, then repeat the 3-point calibration.

7.2.1.2 Verification of Manufacturer's Calibration Standards. Before using, the manufacturer shall verify each calibration standard by (a) comparing it to gas mixtures prepared (with 99 mole percent vinyl chloride) in accordance with the procedure described in Section 10.1 of Method 106 or by (b) calibrating it against vinyl chloride cylinder Standard Reference Materials (SRMs) prepared by the National Institute of Standards and Technology, if such SRMs are available. The agreement between the initially determined concentration value and the verification concentration value must be within 5 percent. The manufacturer must reverify all calibration standards on a time interval consistent with the shelf life of the cylinder standards sold.

8.0 Sample Collection, Preservation, Storage, and Transport

8.1 Sample Collection.

8.1.1 PVC Sampling. Allow the resin or slurry to flow from a tap on the tank or silo until the tap line has been well purged. Extend and fill a 60-ml sample bottle under the tap, and immediately tighten a cap on the bottle. Wrap adhesive tape around the cap and bottle to prevent the cap from loosening. Place an identifying label on each bottle, and record the date, time, and sample location both on the bottles and in a log book.

8.1.2 Water Sampling. At the sampling location fill the vials bubble-free to overflowing so that a convex meniscus forms at the top. The excess water is displaced as the sealing disc is carefully placed, with the Teflon side down, on the opening of the vial. Place the aluminum seal over the disc and the neck of the vial, and crimp into place. Affix an identifying label on the bottle, and record the date, time, and sample location both on the vials and in a log book.

8.2 Sample Storage. All samples must be analyzed within 24 hours of collection, and must be refrigerated during this period.

9.0 Quality Control

Section	Quality control measure	Effect
10.3	Chromatograph calibration	Ensure precision and accuracy of chromatograph.

10.0 Calibration and Standardization

NOTE: Maintain a laboratory log of all calibrations.

10.1 Preparation of Standards. Calibration standards are prepared as follows: Place 100 µl or about two equal drops of distilled water in the sample vial, then fill the vial with the VCM/nitrogen standard, rapidly seat the septum, and seal with the aluminum cap. Use a ⅛-in. stainless steel line from the cylinder to the vial. Do not use rubber or Tygon tubing. The sample line from the cylinder must be purged (into a properly vented hood) for several minutes prior to filling the vials. After purging, reduce the flow rate to between 500 and 1000 cc/min. Place end of tubing into vial (near bottom). Position a septum on top of the vial, pressing it against the ⅛-in. filling tube to minimize the size of the vent opening. This is necessary to minimize mixing air with the standard in the vial. Each vial is to be purged with standard for 90 seconds, during which time the filling tube is gradually slid to the top of the vial. After the 90 seconds, the tube is removed with the septum, simultaneously sealing the vial. Practice will be necessary to develop good technique. Rubber gloves should be worn during the above operations. The sealed vial must then be pressurized for 60 seconds using the vial prepressurizer. Test the vial for leakage by placing a drop of water on the septum at the needle hole. Prepressurization of standards is not required unless samples have been prepressurized.

10.2 Analyzer Calibration. Calibration is to be performed each 8-hour period the chromatograph is used. Alternatively, calibration with duplicate 50-, 500-, 2,000-, and 4,000-ppm standards (hereafter described as a four-point calibration) may be performed on a monthly basis, provided that a calibration confirmation test consisting of duplicate analyses of an appropriate standard is performed once per plant shift, or once per chromatograph carrousel operation (if the chromatograph operation is less frequent than once per shift). The criterion for acceptance of each calibration confirmation test is that both analyses of 500-ppm standards [2,000-ppm standards if dispersion resin (excluding latex resin) samples are being analyzed] must be within 5 percent of the most recent four-point calibration curve. If this criterion is not met, then a complete four-point calibration must be performed before sample analyses can proceed.

10.3 Preparation of Chromatograph Calibration Curve. Prepare two vials each of 50-, 500-, 2,000-, and 4,000-ppm standards. Run the calibration samples in exactly the same manner as regular samples. Plot A_s, the integrator area counts for each standard sample, versus C_c, the concentration of vinyl chloride in each standard sample. Draw a straight line through the points derived by the least squares method.

11.0 Analytical Procedure

11.1 Preparation of Equipment. Install the chromatographic column and condition overnight at 160 °C (320 °F). In the first operation, Porapak columns must be purged for 1 hour at 230 °C (450 °F).

Do not connect the exit end of the column to the detector while conditioning. Hydrogen and air to the detector must be turned off while the column is disconnected.

11.2 Flow Rate Adjustments. Adjust flow rates as follows:

11.2.1. Nitrogen Carrier Gas. Set regulator on cylinder to read 50 psig. Set regulator on chromatograph to produce a flow rate of 30.0 cc/min. Accurately measure the flow rate at the exit end of the column using the soap film flowmeter and a stopwatch, with the oven and column at the analysis temperature. After the instrument program advances to the ''B'' (backflush) mode, adjust the nitrogen pressure regulator to exactly balance the nitrogen flow rate at the detector as was obtained in the ''A'' mode.

11.2.2. Vial Prepressurizer Nitrogen.

11.2.2.1 After the nitrogen carrier is set, solve the following equation and adjust the pressure on the vial prepressurizer accordingly.

$$P = \frac{T_1}{T_2}\left[P_1 - \frac{P_{w1} - P_{w2}}{7.50}\right] - 10\,\text{kPa} \qquad \text{Eq. 107-1}$$

Where:

T_1 = Ambient temperature, °K (°R).

T_2 = Conditioning bath temperature, °K (°R).

P_1 = Gas chromatograph absolute dosing pressure (analysis mode), k Pa.

P_{w1} = Water vapor pressure 525.8 mm Hg @ 90 °C.

P_{w2} = Water vapor pressure 19.8 mm Hg @ 22 °C.

7.50 = mm Hg per k Pa.

10 kPa = Factor to adjust the prepressurized pressure to slightly less than the dosing pressure.

11.2.2.2 Because of gauge errors, the apparatus may over-pressurize the vial. If the vial pressure is at or higher than the dosing pressure, an audible double injection will occur. If the vial pressure is too low, errors will occur on resin samples because of inadequate time for head-space gas equilibrium. This condition can be avoided by running several standard gas samples at various pressures around the calculated pressure, and then selecting the highest pressure that does not produce a double injection. All samples and standards must be pressurized for 60 seconds using the vial prepressurizer. The vial is then placed into the 90 °C conditioning bath and tested for leakage by placing a drop of water on the septum at the needle hole. A clean, burr-free needle is mandatory.

11.2.3. Burner Air Supply. Set regulator on cylinder to read 50 psig. Set regulator on chromatograph to supply air to burner at a rate between 250 and 300 cc/min. Check with bubble flowmeter.

11.2.4. Hydrogen Supply. Set regulator on cylinder to read 30 psig. Set regulator on chromatograph to supply approximately 35 ± 5 cc/min. Optimize hydrogen flow to yield the most sensitive detector response without extinguishing the flame. Check flow with bubble meter and record this flow.

11.3 Temperature Adjustments. Set temperatures as follows:

11.3.1. Oven (chromatograph column), 140 °C (280 °F).

11.3.2. Dosing Line, 150 °C (300 °F).

11.3.3. Injection Block, 170 °C (340 °F).

11.3.4. Sample Chamber, Water Temperature, 90 °C ± 1.0 °C (194 °F ± 1.8 °F).

11.4 Ignition of Flame Ionization Detector. Ignite the detector according to the manufacturer's instructions.

11.5 Amplifier Balance. Balance the amplifier according to the manufacturer's instructions.

11.6 Programming the Chromatograph. Program the chromatograph as follows:

11.6.1. I — Dosing or Injection Time. The normal setting is 2 seconds.

11.6.2. A — Analysis Time. The normal setting is approximately 70 percent of the VCM retention time. When this timer terminates, the programmer initiates backflushing of the first column.

11.6.3. B — Backflushing Time. The normal setting is double the analysis time.

11.6.4. W — Stabilization Time. The normal setting is 0.5 min to 1.0 min.

11.6.5. X — Number of Analyses Per Sample. The normal setting is one.

11.7. Sample Treatment. All samples must be recovered and analyzed within 24 hours after collection.

11.7.1 Resin Samples. The weight of the resin used must be between 0.1 and 4.5 grams. An exact weight must be obtained (within ±1 percent) for each sample. In the case of suspension resins, a volumetric cup can be prepared for holding the required amount of sample. When the cup is used, open the sample bottle, and add the cup volume of resin to the tared sample vial (tared, including septum and aluminum cap). Obtain the exact sample weight, add 100 ml or about two equal drops of water, and immediately seal the vial. Report this value on the data sheet; it is required for calculation of RVCM. In the case of dispersion resins, the cup cannot be used. Weigh the sample in an aluminum dish, transfer the sample to the tared vial, and accurately weigh it in the vial. After prepressurization of the samples, condition them for a minimum of 1 hour in the 90 °C (190 °F) bath. Do not exceed 5 hours. Prepressurization is not required if the sample weight, as analyzed, does not exceed 0.2 gram. It is also not required if solution of the prepressurization equation yields an absolute prepressurization value that is within 30 percent of the atmospheric pressure.

NOTE: Some aluminum vial caps have a center section that must be removed prior to placing into sample tray. If the cap is not removed, the injection needle will be damaged.

11.7.2 Suspension Resin Slurry and Wet Cake Samples. Decant the water from a wet cake sample, and turn the sample bottle upside down onto a paper towel. Wait for the water to drain, place approximately 0.2 to 4.0 grams of the wet cake sample in a tared vial (tared, including septum and aluminum cap) and seal immediately. Then determine the sample weight (1 percent). All samples weighing over 0.2 gram, must be prepressurized prior to conditioning for 1 hour at 90 °C (190 °F), except as noted in Section 11.7.1. A sample of wet cake is used to determine total solids (TS). This is required for calculating the RVCM.

11.7.3 Dispersion Resin Slurry and Geon Latex Samples. The materials should not be filtered. Sample must be thoroughly mixed. Using a tared vial (tared, including septum and aluminum cap) add approximately eight drops (0.25 to 0.35 g) of slurry or latex using a medicine dropper. This should be done immediately after mixing. Seal the vial as soon as possible. Determine sample weight (1 percent). Condition the vial for 1 hour at 90 °C (190 °F) in the analyzer bath. Determine the TS on the slurry sample (Section 11.10).

11.7.4 In-process Wastewater Samples. Using a tared vial (tared, including septum

and aluminum cap) quickly add approximately 1 cc of water using a medicine dropper. Seal the vial as soon as possible. Determine sample weight (1 percent). Condition the vial for 1 hour at 90 °C (190 °F) in the analyzer bath.

11.8 Preparation of Sample Turntable.

11.8.1 Before placing any sample into turntable, be certain that the center section of the aluminum cap has been removed. The numbered sample vials should be placed in the corresponding numbered positions in the turntable. Insert samples in the following order:

11.8.1.1 Positions 1 and 2. Old 2000-ppm standards for conditioning. These are necessary only after the analyzer has not been used for 24 hours or longer.

11.8.1.2 Position 3. 50-ppm standard, freshly prepared.

11.8.1.3 Position 4. 500-ppm standard, freshly prepared.

11.8.1.4 Position 5. 2000-ppm standard, freshly prepared.

11.8.1.5 Position 6. 4000-ppm standard, freshly prepared.

11.8.1.6 Position 7. Sample No. 7 (This is the first sample of the day, but is given as 7 to be consistent with the turntable and the integrator printout.)

11.8.2 After all samples have been positioned, insert the second set of 50-, 500-, 2000-, and 4000-ppm standards. Samples, including standards, must be conditioned in the bath of 90 °C (190 °F) for a minimum of one hour and a maximum of five hours.

11.9 Start Chromatograph Program. When all samples, including standards, have been conditioned at 90 °C (190 °F) for at least one hour, start the analysis program according to the manufacturer's instructions. These instructions must be carefully followed when starting and stopping a program to prevent damage to the dosing assembly.

11.10 Determination of Total Solids. For wet cake, slurry, resin solution, and PVC latex samples, determine TS for each sample by accurately weighing approximately 3 to 4 grams of sample in an aluminum pan before and after placing in a draft oven (105 to 110 °C (221 to 230 °F)). Samples must be dried to constant weight. After first weighing, return the pan to the oven for a short period of time, and then reweigh to verify complete dryness. The TS are then calculated as the final sample weight divided by initial sample weight.

12.0 Calculations and Data Analysis

12.1 Nomenclature.

A_s = Chromatogram area counts of vinyl chloride for the sample, area counts.

A_s = Chromatogram area counts of vinyl chloride for the sample.

C_c = Concentration of vinyl chloride in the standard sample, ppm.

K_p = Henry's Law Constant for VCM in PVC 90 °C, 6.52×10^{-6} g/g/mm Hg.

K_w = Henry's Law Constant for VCM in water 90 °C, 7×10^{-7} g/g/mm Hg.

M_v = Molecular weight of VCM, 62.5 g/mole.

m = Sample weight, g.

P_a = Ambient atmospheric pressure, mm Hg.

R = Gas constant, (62360 ^{3} ml) (mm Hg)/(mole)(°K).

R_f = Response factor in area counts per ppm VCM.

R_s = Response factor, area counts/ppm.

T_1 = Ambient laboratory temperature, °K.

TS = Total solids expressed as a decimal fraction.

T_2 = Equilibrium temperature, °K.

V_g = Volume of vapor phase, ml.

$$= V_v - \frac{m(TS)}{1.36} - \frac{m(1-TS)}{0.9653}$$

V_v = Vial volume,^{3} ml.

1.36 = Density of PVC at 90 °C, g/^{3} ml.

0.9653 = Density of water at 90 °C, g/^{3} ml.

12.2 Response Factor. If the calibration curve described in Section 10.3 passes through zero, an average response factor, R_f, may be used to facilitate computation of vinyl chloride sample concentrations.

12.2.1 To compute R_f, first compute a response factor, R_s, for each sample as follows:

$$R_s = \frac{A_s}{C_c} \qquad \text{Eq. 107-2}$$

12.2.2 Sum the individual response factors, and calculate R_f. If the calibration curve does not pass through zero, use the

calibration curve to determine each sample concentration.

12.3 Residual Vinyl Chloride Monomer Concentration, (C_{rvc}) or Vinyl Chloride Monomer Concentration. Calculate C_{rvc} in ppm or mg/kg as follows:

$$C_{rvc} = \frac{A_s P_a}{R_f T_1}\left[\frac{M_v V_g}{Rm} + K_p(TS)T_2 K_w(1-TS)T_2\right] \qquad \text{Eq. 107-3}$$

NOTE: Results calculated using these equations represent concentration based on the total sample. To obtain results based on dry PVC content, divide by TS.

13.0 Method Performance

13.1 Range and Sensitivity. The lower limit of detection of vinyl chloride will vary according to the sampling and chromatographic system. The system should be capable of producing a measurement for a 50-ppm vinyl chloride standard that is at least 10 times the standard deviation of the system background noise level.

13.2 An interlaboratory comparison between seven laboratories of three resin samples, each split into three parts, yielded a standard deviation of 2.63 percent for a sample with a mean of 2.09 ppm, 4.16 percent for a sample with a mean of 1.66 ppm, and 5.29 percent for a sample with a mean of 62.66 ppm.

14.0 Pollution Prevention [Reserved]

15.0 Waste Management [Reserved]

16.0 References

1. B.F. Goodrich, Residual Vinyl Chloride Monomer Content of Polyvinyl Chloride Resins, Latex, Wet Cake, Slurry and Water Samples. B.F. Goodrich Chemical Group Standard Test Procedure No. 1005-E. B.F. Goodrich Technical Center, Avon Lake, Ohio. October 8, 1979.

2. Berens, A.R. The Diffusion of Vinyl Chloride in Polyvinyl Chloride. ACS-Division of Polymer Chemistry, Polymer Preprints 15 (2):197. 1974.

3. Berens, A.R. The Diffusion of Vinyl Chloride in Polyvinyl Chloride. ACS-Division of Polymer Chemistry, Polymer Preprints 15 (2):203. 1974.

4. Berens, A.R., *et. al.* Analysis for Vinyl Chloride in PVC Powders by Head-Space Gas Chromatography. Journal of Applied Polymer Science. 19:3169–3172. 1975.

5. Mansfield, R.A. The Evaluation of Henry's Law Constant (Kp) and Water Enhancement in the Perkin-Elmer Multifract F–40 Gas Chromatograph. B.F. Goodrich. Avon Lake, Ohio. February 10, 1978.

17.0 Tables, Diagrams, Flowcharts, and Validation Data [Reserved]

METHOD 107A—DETERMINATION OF VINYL CHLORIDE CONTENT OF SOLVENTS, RESIN-SOLVENT SOLUTION, POLYVINYL CHLORIDE RESIN, RESIN SLURRY, WET RESIN, AND LATEX SAMPLES

Introduction

Performance of this method should not be attempted by persons unfamiliar with the operation of a gas chromatograph (GC) or by those who are unfamiliar with source sampling because knowledge beyond the scope of this presentation is required. Care must be exercised to prevent exposure of sampling personnel to vinyl chloride, a carcinogen.

1. *Applicability and Principle*

1.1 Applicability. This is an alternative method and applies to the measurement of the vinyl chloride content of solvents, resin solvent solutions, polyvinyl chloride (PVC) resin, wet cake slurries, latex, and fabricated resin samples. This method is not acceptable where methods from Section 304(h) of the Clean Water Act, 33 U.S.C. 1251 et seq., (the Federal Water Pollution Control Act Amendments of 1972 as amended by the Clean Water Act of 1977) are required.

1.2 Principle. The basis for this method lies in the direct injection of a liquid sample into a chromatograph and the subsequent evaporation of all volatile material into the carrier gas stream of the chromatograph, thus permitting analysis of all volatile material including vinyl chloride.

2. *Range and Sensitivity*

The lower limit of detection of vinyl chloride in dry PVC resin is 0.2 ppm. For resin solutions, latexes, and wet resin, this limit rises inversely as the nonvolatile (resin) content decreases.

With proper calibration, the upper limit may be extended as needed.

3. *Interferences*

The chromatograph columns and the corresponding operating parameters herein described normally provide an adequate resolution of vinyl chloride. In cases where resolution interferences are encountered, the chromatograph operator shall select the column and operating parameters best suited to his

particular analysis problem, subject to the approval of the Administrator. Approval is automatic, provided that the tester produces confirming data through an adequate supplemental analytical technique, such as analysis with a different column or GC/mass spectroscopy, and has the data available for review by the Administrator.

4. *Precision and Reproducibility*

A standard sample of latex containing 181.8 ppm vinyl chloride analyzed 10 times by the alternative method showed a standard deviation of 7.5 percent and a mean error of 0.21 percent.

A sample of vinyl chloride copolymer resin solution was analyzed 10 times by the alternative method and showed a standard deviation of 6.6 percent at a level of 35 ppm.

5. *Safety*

Do not release vinyl chloride to the laboratory atmosphere during preparation of standards. Venting or purging with vinyl chloride monomer (VCM) air mixtures must be held to minimum. When purging is required, the vapor must be routed to outside air. Vinyl chloride, even at low-ppm levels, must never be vented inside the laboratory.

6. *Apparatus*

6.1 Sampling. The following equipment is required:

6.1.1 Glass Bottles. 16-oz wide mouth wide polyethylene-lined, screw-on tops.

6.1.2 Adhesive Tape. To prevent loosening of bottle tops.

6.2 Sample Recovery. The following equipment is required:

6.2.1 Glass Vials. 20-ml capacity with polycone screw caps.

6.2.2 Analytical Balance. Capable of weighing to ±0.01 gram.

6.2.3 Syringe. 50-microliter size, with removable needle.

6.2.4 Fritted Glass Sparger. Fine porosity.

6.2.5 Aluminum Weighing Dishes.

6.2.6 Sample Roller or Shaker. To help dissolve sample.

6.3 Analysis. The following equipment is required:

6.3.1 Gas Chromatograph. Hewlett Packard Model 5720A or equivalent.

6.3.2 Chromatograph Column. Stainless steel, 6.1 m by 3.2 mm, packed with 20 percent Tergitol E–35 on Chromosorb W AW 60/80 mesh. The analyst may use other columns provided that the precision and accuracy of the analysis of vinyl chloride standards are not impaired and that he has available for review information confirming that there is adequate resolution of the vinyl chloride peak. (Adequate resolution is defined as an area overlap of not more than 10 percent of the vinyl chloride peak by an interfering peak. Calculation of area overlap is explained in Apendix C, Procedure 1: ''Determination of Adequate Chromatographic Peak Resolution.'')

6.3.3 Valco Instrument Six-Port Rotary Valve. For column back flush.

6.3.4 Septa. For chromatograph injection port.

6.3.5 Injection Port Liners. For chromatograph used.

6.3.6 Regulators. For required gas cylinders.

6.3.7 Soap Film Flowmeter. Hewlett Packard No. 0101-0113 or equivalent.

6.4 Calibration. The following equipment is required:

6.4.1 Analytical Balance. Capable of weighing to ±0.0001 g.

6.4.2 Erlenmeyer Flask With Glass Stopper. 125 ml.

6.4.3 Pipets. 0.1, 0.5, 1, 5, 10, and 50 ml.

6.4.4 Volumetric Flasks. 10 and 100 ml.

7. *Reagents*

Use only reagents that are of chromatograph grade.

7.1 Analysis. The following items are required:

7.1.1 Hydrogen Gas. Zero grade.

7.1.2 Nitrogen Gas. Zero grade.

7.1.3 Air. Zero grade.

7.1.4 Tetrahydrofuran (THF). Reagent grade.

Analyze the THF by injecting 10 microliters into the prepared gas chromatograph. Compare the THF chromatogram with that shown in Figure 107A–1. If the chromatogram is comparable to A, the THF should be sparged with pure nitrogen for approximately 2 hours using the fritted glass sparger to attempt to remove the interfering peak. Reanalyze the sparged THF to determine whether the THF is acceptable for use. If the scan is comparable to B, the THF should be acceptable for use in the analysis.

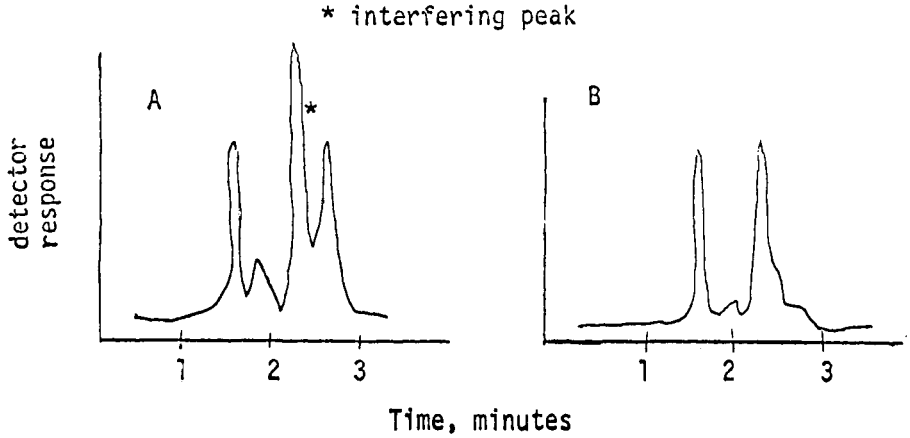

Figure 107A-1

7.1.5 N, N-Dimethylacetamide (DMAC). Spectrographic grade. For use in place of THF.

7.2 Calibration. The following item is required:

7.2.1 Vinyl Chloride 99.9 Percent. Ideal Gas Products lecture bottle, or equivalent. For preparation of standard solutions.

8. *Procedure*

8.1 Sampling. Allow the liquid or dried resin to flow from a tap on the tank, silo, or pipeline until the tap has been purged. Fill a wide-mouth pint bottle, and immediately tightly cap the bottle. Place an identifying label on each bottle and record the date, time, sample location, and material.

8.2 Sample Treatment. Sample must be run within 24 hours.

8.2.1 Resin Samples. Weigh 9.00 ±0.01 g of THF or DMAC in a tared 20-ml vial. Add 1.00 ±0.01 g of resin to the tared vial containing the THF or DMAC. Close the vial tightly with the screw cap, and shake or otherwise agitate the vial until complete solution of the resin is obtained. Shaking may require several minutes to several hours, depending on the nature of the resin.

8.2.2 Suspension Resin Slurry and Wet Resin Sample. Slurry must be filtered using a small Buchner funnel with vacuum to yield a wet resin sample. The filtering process must be continued only as long as a steady stream of water is exiting from the funnel. Excessive filtration time could result in some loss of VCM. The wet resin sample is weighed into a tared 20-ml vial with THF or DMAC as described earlier for resin samples (8.2.1) and treated the same as the resin sample. A sample of the wet resin is used to determine total solids as required for calculating the residual VCM (Section 8.3.4).

8.2.3 Latex and Resin Solvent Solutions. Samples must be thoroughly mixed. Weigh 1.00 ±0.01 g of the latex or resin-solvent solution into a 20-ml vial containing 9.00 ±0.01 g of THF or DMAC as for the resin samples (8.2.1). Cap and shake until complete solution is obtained. Determine the total solids of the latex or resin solution sample (Section 8.3.4).

8.2.4 Solvents and Non-viscous Liquid Samples. No preparation of these samples is required. The neat samples are injected directly into the GC.

8.3 Analysis.

8.3.1 Preparation of GC. Install the chromatographic column, and condition overnight at 70 °C. Do not connect the exit end of the column to the detector while conditioning.

8.3.1.1 Flow Rate Adjustments. Adjust the flow rate as follows:

a. Nitrogen Carrier Gas. Set regulator on cylinder to read 60 psig. Set column flow controller on the chromatograph using the soap film flowmeter to yield a flow rate of 40 cc/min.

b. Burner Air Supply. Set regulator on the cylinder at 40 psig. Set regulator on the chromatograph to supply air to the burner to yield a flow rate of 250 to 300 cc/min using the flowmeter.

c. Hydrogen. Set regulator on cylinder to read 60 psig. Set regulator on the chromatograph to supply 30 to 40 cc/min using the flowmeter. Optimize hydrogen flow to yield the most sensitive detector response without extinguishing the flame. Check flow with flowmeter and record this flow.

d. Nitrogen Back Flush Gas. Set regulator on the chromatograph using the soap film flowmeter to yield a flow rate of 40 cc/min.

8.3.1.2 Temperature Adjustments. Set temperature as follows:

a. Oven (chromatographic column) at 70 °C.

b. Injection Port at 100 °C.

c. Detector at 300 °C.

8.3.1.3 Ignition of Flame Ionization Detector. Ignite the detector according to the manufacturer's instructions. Allow system to stabilize approximately 1 hour.

8.3.1.4 Recorder. Set pen at zero and start chart drive.

8.3.1.5 Attenuation. Set attenuation to yield desired peak height depending on sample VCM content.

8.3.2 Chromatographic Analyses.

a. Sample Injection. Remove needle from 50-microliter syringe. Open sample vial and draw 50-microliters of THF or DMAC sample recovery solution into the syringe. Recap sample vial. Attach needle to the syringe and while holding the syringe vertically (needle uppermost), eject 40 microliters into an absorbent tissue. Wipe needle with tissue. Now inject 10 microliters into chromatograph system. Repeat the injection until two consecutive values for the height of the vinyl chloride peak do not vary more than 5 percent. Use the average value for these two peak heights to compute the sample concentration.

b. Back Flush. After 4 minutes has elapsed after sample injection, actuate the back flush valve to purge the first 4 feet of the chromatographic column of solvent and other high boilers.

c. Sample Data. Record on the chromatograph strip chart the data from the sample label.

d. Elution Time. Vinyl chloride elutes at 2.8 minutes. Acetaldehyde elutes at 3.7 minutes. Analysis is considered complete when chart pen becomes stable. After 5 minutes, reset back flush valve and inject next sample.

8.3.3 Chromatograph Servicing.

a. Septum. Replace after five sample injections.

b. Sample Port Liner. Replace the sample port liner with a clean spare after five sample injections.

c. Chromatograph Shutdown. If the chromatograph has been shut down overnight, rerun one or more samples from the preceding day to test stability and precision prior to starting on the current day's work.

8.3.4 Determination of Total Solids (TS). For wet resin, resin solution, and PVC latex samples, determine the TS for each sample by accurately weighing approximately 3 to 5 grams of sample into a tared aluminum pan. The initial procedure is as follows:

a. Where water is the major volatile component: Tare the weighing dish, and add 3 to 5 grams of sample to the dish. Weigh to the nearest milligram.

b. Where volatile solvent is the major volatile component: Transfer a portion of the sample to a 20-ml screw cap vial and cap immediately. Weigh the vial to the nearest milligram. Uncap the vial and transfer a 3- to 5-gram portion of the sample to a tared aluminum weighing dish. Recap the vial and reweigh to the nearest milligram. The vial weight loss is the sample weight.

To continue, place the weighing pan in a 130 °C oven for 1 hour. Remove the dish and allow to cool to room temperature in a desiccator. Weigh the pan to the nearest 0.1 mg. Total solids is the weight of material in the aluminum pan after heating divided by the net weight of sample added to the pan originally times 100.

9. *Calibration of the Chromatograph*

9.1 Preparation of Standards. Prepare a 1 percent by weight (approximate) solution of vinyl chloride in THF or DMAC by bubbling vinyl chloride gas from a cylinder into a tared 125-ml glass-stoppered flask containing THF or DMAC. The weight of vinyl chloride to be added should be calculated prior to this operation, i.e., 1 percent of the weight of THF or DMAC contained in the tared flask. This must be carried out in a laboratory hood. Adjust the vinyl chloride flow from the cylinder so that the vinyl chloride dissolves essentially completely in the THF or DMAC and is not blown to the atmosphere. Take particular care not to volatize any of the solution. Stopper the flask and swirl the solution to effect complete mixing. Weigh the stoppered flask to nearest 0.1 mg to determine the exact amount of vinyl chloride added.

Pipet 10 ml of the approximately 1 percent solution into a 100-ml glass-stoppered volumetric flask, and add THF or DMAC to fill to the mark. Cap the flask and invert 10 to 20 times. This solution contains approximately 1,000 ppm by weight of vinyl chloride (note the exact concentration).

Pipet 50-, 10-, 5-, 1-, 0.5-, and 0.1-ml aliquots of the approximately 1,000 ppm solution into 10 ml glass stoppered volumetric flasks. Dilute to the mark with THF or DMAC, cap the flasks and invert each 10 to 20 times. These solutions contain approximately 500, 100, 50, 10, 5, and 1 ppm vinyl chloride. Note the exact concentration of each one. These standards are to be kept under refrigeration in stoppered bottles, and must be renewed every 3 months.

9.2 Preparation of Chromatograph Calibration Curve.

Obtain the GC for each of the six final solutions prepared in Section 9.1 by using the procedure in Section 8.3.2. Prepare a chart plotting peak height obtained from the chromatogram of each solution versus the known concentration. Draw a straight line through

the points derived by the least squares method.

10. *Calculations*

10.1 Response Factor. From the calibration curve described in Section 9.2, select the value of C_c that corresponds to H_c for each sample. Compute the response factor, R_f, for each sample as follows:

$$R_f = \frac{C_c}{H_c} \qquad \text{Eq. 107A-1}$$

where:

R_f=Chromatograph response factor, ppm/mm.
C_c=Concentration of vinyl chloride in the standard sample, ppm.
H_c=Peak height of the standard sample, mm.

10.2 Residual vinyl chloride monomer concentration (C_{rvc}) or vinyl chloride monomer concentration in resin:

$$C_{rvc} = 10 H_s R_f \qquad \text{Eq.107A-2}$$

Where:

C_{rvc}=Concentration of residual vinyl chloride monomer, ppm.
H_s=Peak height of sample, mm.
R_f=Chromatograph response factor.

10.3 Samples containing volatile material, i.e., resin solutions, wet resin, and latexes:

$$C_{rvc} = \frac{H_s R_f (1{,}000)}{TS} \qquad \text{Eq. 107A-3}$$

where:

TS=Total solids in the sample, weight fraction.

10.4 Samples of solvents and in process wastewater:

$$C_{rvc} = \frac{H_s R_f}{0.888} \qquad \text{Eq. 107A-4}$$

Where:

0.888=Specific gravity of THF.

11. *Bibliography*

1. Communication from R. N. Wheeler, Jr.; Union Carbide Corporation. Part 61 National Emissions Standards for Hazardous Air Pollutants appendix B, Method 107—Alternate Method, September 19, 1977.

METHOD 108—DETERMINATION OF PARTICULATE AND GASEOUS ARSENIC EMISSIONS

NOTE: This method does not include all of the specifications (*e.g.*, equipment and supplies) and procedures (*e.g.*, sampling and analytical) essential to its performance. Some material is incorporated by reference from other methods in appendix A to 40 CFR part 60. Therefore, to obtain reliable results, persons using this method should have a thorough knowledge of at least the following additional test methods: Method 1, Method 2, Method 3, Method 5, and Method 12.

1.0 Scope and Application.

1.1 Analytes.

Analyte	CAS No.	Sensitivity
Arsenic compounds as arsenic (As)	7440–38–2	Lower limit 10 µg/ml or less.

1.2 Applicability. This method is applicable for the determination of inorganic As emissions from stationary sources as specified in an applicable subpart of the regulations.

1.3 Data Quality Objectives. Adherence to the requirements of this method will enhance the quality of the data obtained from air pollutant sampling methods.

2.0 Summary of Method

Particulate and gaseous As emissions are withdrawn isokinetically from the source and are collected on a glass mat filter and in water. The collected arsenic is then analyzed by means of atomic absorption spectrophotometry (AAS).

3.0 Definitions. [Reserved]

4.0 Interferences

Analysis for As by flame AAS is sensitive to the chemical composition and to the physical properties (*e.g.*, viscosity, pH) of the sample. The analytical procedure includes a check for matrix effects (Section 11.5).

5.0 Safety

5.1 This method may involve hazardous materials, operations, and equipment. This test method may not address all of the safety problems associated with its use. It is the responsibility of the user to establish appropriate safety and health practices and determine the applicability of regulatory limitations prior to performing this test method.

5.2 Corrosive reagents. The following reagents are hazardous. Personal protective equipment and safe procedures that prevent chemical splashes are recommended. If contact occurs, immediately flush with copious amounts of water for at least 15 minutes. Remove clothing under shower and decontaminate. Treat residual chemical burns as thermal burns.

5.2.1 Hydrochloric Acid (HCl). Highly corrosive liquid with toxic vapors. Vapors are highly irritating to eyes, skin, nose, and

lungs, causing severe damage. May cause bronchitis, pneumonia, or edema of lungs. Exposure to concentrations of 0.13 to 0.2 percent can be lethal to humans in a few minutes. Provide ventilation to limit exposure. Reacts with metals, producing hydrogen gas.

5.2.2 Hydrogen Peroxide (H_2O_2). Very harmful to eyes. 30% H_2O_2 can burn skin, nose, and lungs.

5.2.3 Nitric Acid (HNO_3). Highly corrosive to eyes, skin, nose, and lungs. Vapors are highly toxic and can cause bronchitis, pneumonia, or edema of lungs. Reaction to inhalation may be delayed as long as 30 hours and still be fatal. Provide ventilation to limit exposure. Strong oxidizer. Hazardous reaction may occur with organic materials such as solvents.

5.2.4 Sodium Hydroxide (NaOH). Causes severe damage to eyes and skin. Inhalation causes irritation to nose, throat, and lungs. Reacts exothermically with small amounts of water.

6.0 Equipment and Supplies

6.1 Sample Collection. A schematic of the sampling train used in performing this method is shown in Figure 108–1; it is similar to the Method 5 sampling train of 40 CFR part 60, appendix A. The following items are required for sample collection:

6.1.1 Probe Nozzle, Probe Liner, Pitot Tube, Differential Pressure Gauge, Filter Holder, Filter Heating System, Temperature Sensor, Metering System, Barometer, and Gas Density Determination Equipment. Same as Method 5, Sections 6.1.1.1 to 6.1.1.7, 6.1.1.9, 6.1.2, and 6.1.3, respectively.

6.1.2 Impingers. Four impingers connected in series with leak-free ground-glass fittings or any similar leak-free noncontaminating fittings. For the first, third, and fourth impingers, use the Greenburg-Smith design, modified by replacing the tip with a 1.3-cm ID (0.5-in.) glass tube extending to about 1.3 cm (0.5 in.) from the bottom of the flask. For the second impinger, use the Greenburg-Smith design with the standard tip. Modifications (*e.g.*, flexible connections between the impingers, materials other than glass, or flexible vacuum lines to connect the filter holder to the condenser) are subject to the approval of the Administrator.

6.1.3 Temperature Sensor. Place a temperature sensor, capable of measuring temperature to within 1 °C (2 °F), at the outlet of the fourth impinger for monitoring purposes.

6.2 Sample Recovery. The following items are required for sample recovery:

6.2.1 Probe-Liner and Probe-Nozzle Brushes, Petri Dishes, Graduated Cylinder and/or Balance, Plastic Storage Containers, and Funnel and Rubber Policeman. Same as Method 5, Sections 6.2.1 and 6.2.4 to 6.2.8, respectively.

6.2.2 Wash Bottles. Polyethylene (2).

6.2.3 Sample Storage Containers. Chemically resistant, polyethylene or polypropylene for glassware washes, 500- or 1000-ml.

6.3 Analysis. The following items are required for analysis:

6.3.1 Spectrophotometer. Equipped with an electrodeless discharge lamp and a background corrector to measure absorbance at 193.7 nanometers (nm). For measuring samples having less than 10 µg As/ml, use a vapor generator accessory or a graphite furnace.

6.3.2 Recorder. To match the output of the spectrophotometer.

6.3.3 Beakers. 150 ml.

6.3.4 Volumetric Flasks. Glass 50-, 100-, 200-, 500-, and 1000-ml; and polypropylene, 50-ml.

6.3.5 Balance. To measure within 0.5 g.

6.3.6 Volumetric Pipets. 1-, 2-, 3-, 5-, 8-, and 10-ml.

6.3.7 Oven.

6.3.8 Hot Plate.

7.0 Reagents and Standards

Unless otherwise indicated, it is intended that all reagents conform to the specifications established by the Committee on Analytical Reagents of the American Chemical Society, where such specifications are available; otherwise, use the best available grade.

7.1 The following reagents are required for sample collection:

7.1.1 Filters. Same as Method 5, Section 7.1.1, except that the filters need not be unreactive to SO_2.

7.1.2 Silica Gel, Crushed Ice, and Stopcock Grease. Same as Method 5, Sections 7.1.2, 7.1.4, and 7.1.5, respectively.

7.1.3 Water. Deionized distilled to meet ASTM D 1193–77 or 91 (incorporated by reference-see §61.18), Type 3. When high concentrations of organic matter are not expected to be present, the $KMnO_4$ test for oxidizable organic matter may be omitted.

7.2 Sample Recovery.

7.2.1 0.1 N NaOH. Dissolve 4.00 g of NaOH in about 500 ml of water in a 1-liter volumetric flask. Then, dilute to exactly 1.0 liter with water.

7.3 Analysis. The following reagents and standards are required for analysis:

7.3.1 Water. Same as Section 7.1.3.

7.3.2 Sodium Hydroxide, 0.1 N. Same as in Section 7.2.1.

7.3.3 Sodium Borohydride ($NaBH_4$), 5 Percent Weight by Volume (W/V). Dissolve 50.0 g of $NaBH_4$ in about 500 ml of 0.1 N NaOH in a 1-liter volumetric flask. Then, dilute to exactly 1.0 liter with 0.1 N NaOH.

7.3.4 Hydrochloric Acid, Concentrated.

7.3.5 Potassium Iodide (KI), 30 Percent (W/V). Dissolve 300 g of KI in 500 ml of water in a 1 liter volumetric flask. Then, dilute to exactly 1.0 liter with water.

7.3.6 Nitric Acid, Concentrated.

7.3.7 Nitric Acid, 0.8 N. Dilute 52 ml of concentrated HNO_3 to exactly 1.0 liter with water.

7.3.8 Nitric Acid, 50 Percent by Volume (V/V). Add 50 ml concentrated HNO_3 to 50 ml water.

7.3.9 Stock Arsenic Standard, 1 mg As/ml. Dissolve 1.3203 g of primary standard grade As_2O_3 in 20 ml of 0.1 N NaOH in a 150 ml beaker. Slowly add 30 ml of concentrated HNO_3. Heat the resulting solution and evaporate just to dryness. Transfer the residue quantitatively to a 1-liter volumetric flask, and dilute to 1.0 liter with water.

7.3.10 Arsenic Working Solution, 1.0 µg As/ml. Pipet exactly 1.0 ml of stock arsenic standard into an acid-cleaned, appropriately labeled 1-liter volumetric flask containing about 500 ml of water and 5 ml of concentrated HNO_3. Dilute to exactly 1.0 liter with water.

7.3.11 Air. Suitable quality for AAS analysis.

7.3.12 Acetylene. Suitable quality for AAS analysis.

7.3.13 Nickel Nitrate, 5 Percent Ni (W/V). Dissolve 24.780 g of nickel nitrate hexahydrate [$Ni(NO_3)_2 6H_2O$] in water in a 100-ml volumetric flask, and dilute to 100 ml with water.

7.3.14 Nickel Nitrate, 1 Percent Ni (W/V). Pipet 20 ml of 5 percent nickel nitrate solution into a 100-ml volumetric flask, and dilute to exactly 100 ml with water.

7.3.15 Hydrogen Peroxide, 3 Percent by Volume. Pipet 50 ml of 30 percent H_2O_2 into a 500-ml volumetric flask, and dilute to exactly 500 ml with water.

7.3.16 Quality Assurance Audit Samples. When making compliance determinations, and upon availability, audit samples may be obtained from the appropriate EPA regional Office or from the responsible enforcement authority.

NOTE: The responsible enforcement authority should be notified at least 30 days prior to the test date to allow sufficient time for sample delivery.

8.0 Sample Collection, Preservation, Transport, and Storage

8.1 Pretest Preparation. Follow the general procedure given in Method 5, Section 8.1, except the filter need not be weighed, and the 200 ml of 0.1N NaOH and Container 4 should be tared to within 0.5 g.

8.2 Preliminary Determinations. Follow the general procedure given in Method 5, Section 8.2, except select the nozzle size to maintain isokinetic sampling rates below 28 liters/min (1.0 cfm).

8.3 Preparation of Sampling Train. Follow the general procedure given in Method 5, Section 8.3.

8.4 Leak-Check Procedures. Same as Method 5, Section 8.4.

8.5 Sampling Train Operation. Follow the general procedure given in Method 5, Section 8.5, except maintain isokinetic sampling flow rates below 28 liters/min (1.0 cfm). For each run, record the data required on a data sheet similar to the one shown in Figure 108–2.

8.6 Calculation of Percent Isokinetic. Same as Method 5, Section 8.6.

8.7 Sample Recovery. Same as Method 5, Section 8.7, except that 0.1 N NaOH is used as the cleanup solvent instead of acetone and that the impinger water is treated as follows:

8.7.1 Container Number 4 (Impinger Water). Clean each of the first three impingers and connecting glassware in the following manner:

8.7.1.1 Wipe the impinger ball joints free of silicone grease, and cap the joints.

8.7.1.2 Rotate and agitate each of the first two impingers, using the impinger contents as a rinse solution.

8.7.1.3 Transfer the liquid from the first three impingers to Container Number 4. Remove the outlet ball-joint cap, and drain the contents through this opening. Do not separate the impinger parts (inner and outer tubes) while transferring their contents to the container.

8.7.1.4 Weigh the contents of Container No. 4 to within 0.5 g. Record in the log the weight of liquid along with a notation of any color or film observed in the impinger catch. The weight of liquid is needed along with the silica gel data to calculate the stack gas moisture content.

NOTE: Measure and record the total amount of 0.1 N NaOH used for rinsing under Sections 8.7.1.5 and 8.7.1.6.

8.7.1.5 Pour approximately 30 ml of 0.1 NaOH into each of the first two impingers, and agitate the impingers. Drain the 0.1 N NaOH through the outlet arm of each impinger into Container Number 4. Repeat this operation a second time; inspect the impingers for any abnormal conditions.

8.7.1.6 Wipe the ball joints of the glassware connecting the impingers and the back half of the filter holder free of silicone grease, and rinse each piece of glassware twice with 0.1 N NaOH; transfer this rinse into Container Number 4. (DO NOT RINSE or brush the glass-fritted filter support.) Mark the height of the fluid level to determine whether leakage occurs during transport. Label the container to identify clearly its contents.

8.8 Blanks.

8.8.1 Sodium Hydroxide. Save a portion of the 0.1 N NaOH used for cleanup as a blank. Take 200 ml of this solution directly from the wash bottle being used and place it in a plastic sample container labeled ''NaOH blank.''

8.8.2 Water. Save a sample of the water, and place it in a container labeled ''H_2O blank.''

8.8.3 Filter. Save two filters from each lot of filters used in sampling. Place these filters in a container labeled ''filter blank.''

9.0 Quality Control

9.1 Miscellaneous Quality Control Measures.

Section	Quality control measure	Effect
8.4, 10.1	Sampling equipment leak-checks and calibration.	Ensures accuracy and precision of sampling measurements.
10.4	Spectrophotometer calibration	Ensures linearity of spectrophotometer response to standards.
11.5	Check for matrix effects	Eliminates matrix effects.
11.6	Audit sample analysis	Evaluates analyst's technique and standards preparation.

9.2 Volume Metering System Checks. Same as Method 5, Section 9.2.

10.0 Calibration and Standardization

NOTE: Maintain a laboratory log of all calibrations.

10.1 Sampling Equipment. Same as Method 5, Section 10.0.

10.2 Preparation of Standard Solutions.

10.2.1 For the high level procedure, pipet 1, 3, 5, 8, and 10 ml of the 1.0 mg As/ml stock solution into separate 100 ml volumetric flasks, each containing 5 ml of concentrated HNO_3. Dilute to the mark with water.

10.2.2 For the low level vapor generator procedure, pipet 1, 2, 3, and 5 ml of 1.0 µg As/ml standard solution into separate reaction tubes. Dilute to the mark with water.

10.2.3 For the low level graphite furnace procedure, pipet 1, 5, 10 and 15 ml of 1.0 µg As/ml standard solution into separate flasks along with 2 ml of the 5 percent nickel nitrate solution and 10 ml of the 3 percent H_2O_2 solution. Dilute to the mark with water.

10.3 Calibration Curve. Analyze a 0.8 N HNO_3 blank and each standard solution according to the procedures outlined in section 11.4.1. Repeat this procedure on each standard solution until two consecutive peaks agree within 3 percent of their average value. Subtract the average peak height (or peak area) of the blank—which must be less than 2 percent of recorder full scale—from the averaged peak height of each standard solution. If the blank absorbance is greater than 2 percent of full-scale, the probable cause is As contamination of a reagent or carry-over of As from a previous sample. Prepare the calibration curve by plotting the corrected peak height of each standard solution versus the corresponding final total As weight in the solution.

10.4 Spectrophotometer Calibration Quality Control. Calculate the least squares slope of the calibration curve. The line must pass through the origin or through a point no further from the origin than ±2 percent of the recorder full scale. Multiply the corrected peak height by the reciprocal of the least squares slope to determine the distance each calibration point lies from the theoretical calibration line. The difference between the calculated concentration values and the actual concentrations (*e.g.,* 1, 3, 5, 8, and 10 mg As for the high-level procedure) must be less than 7 percent for all standards.

NOTE: For instruments equipped with direct concentration readout devices, preparation of a standard curve will not be necessary. In all cases, follow calibration and operational procedures in the manufacturers' instruction manual.

11.0 Analytical Procedure

11.1 Sample Loss Check. Prior to analysis, check the liquid level in Containers Number 2 and Number 4. Note on the analytical data sheet whether leakage occurred during transport. If a noticeable amount of leakage occurred, either void the sample or take steps, subject to the approval of the Administrator, to adjust the final results.

11.2 Sample Preparation.

11.2.1 Container Number 1 (Filter). Place the filter and loose particulate matter in a 150 ml beaker. Also, add the filtered solid material from Container Number 2 (see Section 11.2.2). Add 50 ml of 0.1 N NaOH. Then stir and warm on a hot plate at low heat (do not boil) for about 15 minutes. Add 10 ml of concentrated HNO_3, bring to a boil, then simmer for about 15 minutes. Filter the solution through a glass fiber filter. Wash with hot water, and catch the filtrate in a clean 150 ml beaker. Boil the filtrate, and evaporate to dryness. Cool, add 5 ml of 50 percent HNO_3, and then warm and stir. Allow to cool. Transfer to a 50-ml volumetric flask, dilute to volume with water, and mix well.

11.2.2 Container Number 2 (Probe Wash).

11.2.2.1 Filter (using a glass fiber filter) the contents of Container Number 2 into a 200 ml volumetric flask. Combine the filtered (solid) material with the contents of Container Number 1 (Filter).

11.2.2.2 Dilute the filtrate to exactly 200 ml with water. Then pipet 50 ml into a 150 ml beaker. Add 10 ml of concentrated HNO_3, bring to a boil, and evaporate to dryness. Allow to cool, add 5 ml of 50 percent HNO_3, and then warm and stir. Allow the solution to cool, transfer to a 50-ml volumetric flask, dilute to volume with water, and mix well.

11.2.3 Container Number 4 (Impinger Solution). Transfer the contents of Container Number 4 to a 500 ml volumetric flask, and dilute to exactly 500-ml with water. Pipet 50 ml of the solution into a 150-ml beaker. Add 10 ml of concentrated HNO_3, bring to a boil, and evaporate to dryness. Allow to cool, add 5 ml of 50 percent HNO_3, and then warm and stir. Allow the solution to cool, transfer to a 50-ml volumetric flask, dilute to volume with water, and mix well.

11.2.4 Filter Blank. Cut each filter into strips, and treat each filter individually as directed in Section 11.2.1, beginning with the sentence, ''Add 50 ml of 0.1 N NaOH.''

11.2.5 Sodium Hydroxide and Water Blanks. Treat separately 50 ml of 0.1 N NaOH and 50 ml water, as directed under Section 11.2.3, beginning with the sentence, ''Pipet 50 ml of the solution into a 150-ml beaker.''

11.3 Spectrophotometer Preparation. Turn on the power; set the wavelength, slit width, and lamp current. Adjust the background corrector as instructed by the manufacturer's manual for the particular atomic absorption spectrophotometer. Adjust the burner and flame characteristics as necessary.

11.4 Analysis. Calibrate the analytical equipment and develop a calibration curve as outlined in Sections 10.2 through 10.4.

11.4.1 Arsenic Samples. Analyze an appropriately sized aliquot of each diluted sample (from Sections 11.2.1 through 11.2.3) until two consecutive peak heights agree within 3 percent of their average value. If applicable, follow the procedures outlined in Section 11.4.1.1. If the sample concentration falls outside the range of the calibration curve, make an appropriate dilution with 0.8 N HNO_3 so that the final concentration falls within the range of the curve. Using the calibration curve, determine the arsenic concentration in each sample fraction.

NOTE: Because instruments vary between manufacturers, no detailed operating instructions will be given here. Instead, the instrument manufacturer's detailed operating instructions should be followed.

11.4.1.1 Arsenic Determination at Low Concentration. The lower limit of flame AAS is 10 µg As/ml. If the arsenic concentration of any sample is at a lower level, use the graphite furnace or vapor generator which is available as an accessory component. Flame, graphite furnace, or vapor generators may be used for samples whose concentrations are between 10 and 30 µg/ml. Follow the manufacturer's instructions in the use of such equipment.

11.4.1.1.1 Vapor Generator Procedure. Place a sample containing between 0 and 5 µg of arsenic in the reaction tube, and dilute to 15 ml with water. Since there is some trial and error involved in this procedure, it may be necessary to screen the samples by conventional atomic absorption until an approximate concentration is determined. After determining the approximate concentration, adjust the volume of the sample accordingly. Pipet 15 ml of concentrated HCl into each tube. Add 1 ml of 30 percent KI solution. Place the reaction tube into a 50 °C (120 °F) water bath for 5 minutes. Cool to room temperature. Connect the reaction tube to the vapor generator assembly. When the instrument response has returned to baseline, inject 5.0 ml of 5 percent $NaBH_4$, and integrate the resulting spectrophotometer signal over a 30-second time period.

11.4.1.1.2 Graphite Furnace Procedure. Dilute the digested sample so that a 5 ml aliquot contains less than 1.5 µg of arsenic. Pipet 5 ml of this digested solution into a 10-ml volumetric flask. Add 1 ml of the 1 percent nickel nitrate solution, 0.5 ml of 50 percent HNO_3, and 1 ml of the 3 percent hydrogen peroxide and dilute to 10 ml with water. The sample is now ready for analysis.

11.4.1.2 Run a blank (0.8 N HNO_3) and standard at least after every five samples to check the spectrophotometer calibration. The peak height of the blank must pass through a point no further from the origin than ±2 percent of the recorder full scale. The difference between the measured concentration of the standard (the product of the corrected average peak height and the reciprocal of the least squares slope) and the actual concentration of the standard must be less than 7 percent, or recalibration of the analyzer is required.

11.4.1.3 Determine the arsenic concentration in the filter blank (i.e., the average of the two blank values from each lot).

11.4.2 Container Number 3 (Silica Gel). This step may be conducted in the field. Weigh the spent silica gel (or silica gel plus impinger) to the nearest 0.5 g; record this weight.

11.5 Check for matrix effects on the arsenic results. Same as Method 12, Section 11.5.

11.6 Audit Sample Analysis.

11.6.1 When the method is used to analyze samples to demonstrate compliance with a source emission regulation, a set of EPA audit samples must be analyzed, subject to availability.

11.6.2 Concurrently analyze the audit samples and the compliance samples in the same manner to evaluate the technique of the analyst and the standards preparation.

NOTE: It is recommended that known quality control samples be analyzed prior to the compliance and audit sample analyses to optimize the system accuracy and precision. These quality control samples may be obtained by contacting the appropriate EPA regional Office or the responsible enforcement authority.

11.6.3 The same analyst, analytical reagents, and analytical system shall be used

for the compliance samples and the EPA audit samples. If this condition is met, duplicate auditing of subsequent compliance analyses for the same enforcement agency within a 30-day period is waived. An audit sample set may not be used to validate different sets of compliance samples under the jurisdiction of separate enforcement agencies, unless prior arrangements have been made with both enforcement agencies.

11.7 Audit Sample Results.

11.7.1 Calculate the audit sample concentrations in g/m3 and submit results using the instructions provided with the audit samples.

11.7.2 Report the results of the audit samples and the compliance determination samples along with their identification numbers, and the analyst's name to the responsible enforcement authority. Include this information with reports of any subsequent compliance analyses for the same enforcement authority during the 30-day period.

11.7.3 The concentrations of the audit samples obtained by the analyst shall agree within 10 percent of the actual concentrations. If the 10 percent specification is not met, reanalyze the compliance and audit samples, and include initial and reanalysis values in the test report.

11.7.4 Failure to meet the 10 percent specification may require retests until the audit problems are resolved. However, if the audit results do not affect the compliance or noncompliance status of the affected facility, the Administrator may waive the reanalysis requirement, further audits, or retests and accept the results of the compliance test. While steps are being taken to resolve audit analysis problems, the Administrator may also choose to use the data to determine the compliance or noncompliance status of the affected facility.

12.0 Data Analysis and Calculations

12.1 Nomenclature.

B_{ws} = Water in the gas stream, proportion by volume.

C_a = Concentration of arsenic as read from the standard curve, µg/ml.

C_c = Actual audit concentration, g/m³.

C_d, = Determined audit concentration, g/m³.

C_s = Arsenic concentration in stack gas, dry basis, converted to standard conditions, g/dsm³ (gr/dscf).

E_a = Arsenic mass emission rate, g/hr (lb/hr).

F_d = Dilution factor (equals 1 if the sample has not been diluted).

I = Percent of isokinetic sampling.

m_{bi} = Total mass of all four impingers and contents before sampling, g.

m_{fi} = Total mass of all four impingers and contents after sampling, g.

m_n = Total mass of arsenic collected in a specific part of the sampling train, µg.

m_t = Total mass of arsenic collected in the sampling train, µg.

T_m = Absolute average dry gas meter temperature (see Figure 108–2), °K (°R).

V_m = Volume of gas sample as measured by the dry gas meter, dry basis, m³ (ft³).

$V_{m(std)}$ = Volume of gas sample as measured by the dry gas meter, corrected to standard conditions, m³ (ft³).

V_n = Volume of solution in which the arsenic is contained, ml.

$V_{w(std)}$ = Volume of water vapor collected in the sampling train, corrected to standard conditions, m³ (ft³).

ΔH = Average pressure differential across the orifice meter (see Figure 108–2), mm H_2O (in. H_2O).

12.2 Average Dry Gas Meter Temperatures (T_m) and Average Orifice Pressure Drop (ΔH). See data sheet (Figure 108–2).

12.3 Dry Gas Volume. Using data from this test, calculate $V_{m(std)}$ according to the procedures outlined in Method 5, Section 12.3.

12.4 Volume of Water Vapor.

$$V_{w(std)} = K_2\left(m_{fi} - m_{bi}\right) \qquad \text{Eq. 108-1}$$

Where:

K_2 = 0.001334 m³/g for metric units.

= 0.047012 ft³/g for English units.

12.5 Moisture Content.

$$B_{ws} = \frac{V_{w(std)}}{V_{m(std)} + V_{w(std)}} \qquad \text{Eq. 108-2}$$

12.6 Amount of Arsenic Collected.

12.6.1 Calculate the amount of arsenic collected in each part of the sampling train, as follows:

$$m_n = C_a F_d V_n \qquad \text{Eq. 108-3}$$

12.6.2 Calculate the total amount of arsenic collected in the sampling train as follows:

$$m_t = m_{(\text{filters})} + m_{(\text{probe})} + m_{(\text{impingers})} - m_{(\text{filter blank})} - m_{(\text{NaOH blank})} - m_{(\text{water blank})} \qquad \text{Eq. 108-4}$$

12.7 Calculate the arsenic concentration in the stack gas (dry basis, adjusted to standard conditions) as follows:

$$C_s = K_3\left(m_t / V_{m(\text{std})}\right) \qquad \text{Eq. 108-5}$$

Where:

$K_3 = 10^{-6}$ g/µg for metric units
$= 1.54 \times 10^{-5}$ gr/µg for English units

12.8 Stack Gas Velocity and Volumetric Flow Rate. Calculate the average stack gas velocity and volumetric flow rate using data obtained in this method and the equations in Sections 12.2 and 12.3 of Method 2.

12.9 Pollutant Mass Rate. Calculate the arsenic mass emission rate as follows:

$$E_a = C_s Q_{sd} \qquad \text{Eq. 108-6}$$

12.10 Isokinetic Variation. Same as Method 5, Section 12.11.

13.0 Method Performance

13.1 Sensitivity. The lower limit of flame AAS 10 µg As/ml. The analytical procedure includes provisions for the use of a graphite furnace or vapor generator for samples with a lower arsenic concentration.

14.0 Pollution Prevention. [Reserved]

15.0 Waste Management. [Reserved]

16.0 References.

Same as References 1 through 9 of Method 5, Section 17.0, with the addition of the following:

1. Perkin Elmer Corporation. Analytical Methods for Atomic Absorption Spectrophotometry. 303–0152. Norwalk, Connecticut. September 1976. pp. 5–6.

2. Standard Specification for Reagent Water. In: Annual Book of American Society for Testing and Materials Standards. Part 31: Water, Atmospheric Analysis. American Society for Testing and Materials. Philadelphia, PA. 1974. pp. 40–42.

3. Stack Sampling Safety Manual (Draft). U.S. Environmental Protection Agency, Office of Air Quality Planning and Standard, Research Triangle Park, NC. September 1978.

17.0 Tables, Diagrams, Flowcharts, and Validation Data

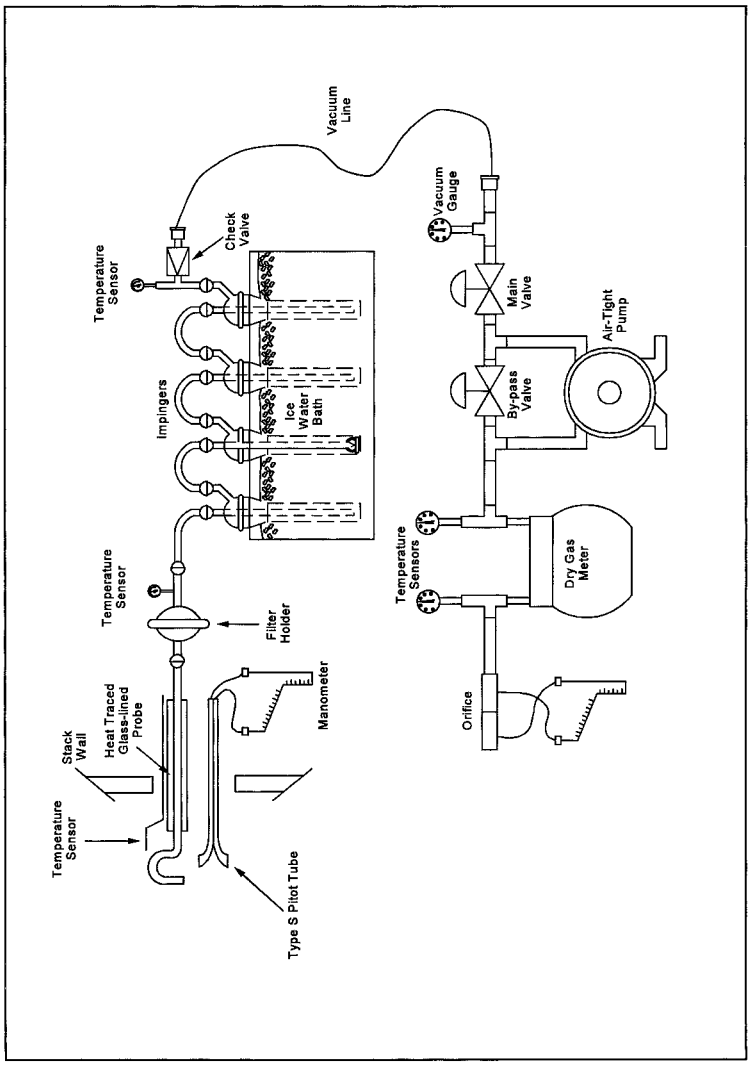

Figure 108-1. Arsenic Sampling Train

Plant _____
Location _____
Operator _____
Date _____
Run No. _____
Sample box No. _____
Meter box No. _____
Meter $\Delta H@$ _____
C factor _____
Pitot tube coefficient, C_p _____

SCHEMATIC OF STACK CROSS SECTION

Ambient temperature _____
Barometric pressure _____
Assumed moisture, % _____
Probe length, (ft.) _____
Nozzle identification No. _____
Average calibrated nozzle diameter, (in.) _____
Probe heater setting _____
Leak rate, (cfm) _____
Probe liner material _____

Traverse point number	Sampling time	Vacuum	Stack temperature	Velocity head	Pressure differential across orifice meter	Gas meter reading	Gas sample temperature at dry gas meter		Filter temperature	Temperature of gas leaving condenser or last impinger
							Inlet	Outlet		
	min.	(in.Hg)	(T_s) (°F)	(ΔP_s) (in. H_2O)	(in. H_2O)	(ft^3)	(°F)	(°F)	(°F)	(°F)
Total							Avg.	Avg.		
Average							Avg.			

Figure 108-2. Arsenic Field Data Sheet.

METHOD 108A—DETERMINATION OF ARSENIC CONTENT IN ORE SAMPLES FROM NONFERROUS SMELTERS

NOTE: This method does not include all of the specifications (*e.g.*, equipment and supplies) and procedures (*e.g.*, sampling and analytical) essential to its performance. Some material is incorporated by reference from other methods in appendix A to 40 CFR part 60. Therefore, to obtain reliable results, persons using this method should have a thorough knowledge of Method 12.

1.0 Scope and Application

1.1 Analytes.

Analyte	CAS No.	Sensitivity
Arsenic compounds as arsenic (As).	7440–38–2	Lower limit 10 µg/ml or less.

1.2 Applicability. This method applies to the determination of inorganic As content of process ore and reverberatory matte samples from nonferrous smelters and other sources as specified in an applicable subpart of the regulations.

1.3 Data Quality Objectives. Adherence to the requirements of this method will enhance the quality of the data obtained from air pollutant sampling methods.

2.0 Summary of Method

Arsenic bound in ore samples is liberated by acid digestion and analyzed by flame atomic absorption spectrophotometry (AAS).

3.0 Definitions [Reserved]

4.0 Interferences

Analysis for As by flame AAS is sensitive to the chemical composition and to the physical properties (*e.g.*, viscosity, pH) of the sample. The analytical procedure includes a check for matrix effects (section 11.5).

5.0 Safety

5.1 Disclaimer. This method may involve hazardous materials, operations, and equipment. This test method may not address all of the safety problems associated with its use. It is the responsibility of the user to establish appropriate safety and health practices and determine the applicability of regulatory limitations prior to performing this test method.

5.2 Corrosive Reagents. The following reagents are hazardous. Personal protective equipment and safe procedures that prevent chemical splashes are recommended. If contact occurs, immediately flush with copious amounts of water for at least 15 minutes. Remove clothing under shower and decontaminate. Treat residual chemical burns as thermal burns.

5.2.1 Hydrochloric Acid (HCl). Highly corrosive liquid with toxic vapors. Vapors are highly irritating to eyes, skin, nose, and lungs, causing severe damage. May cause bronchitis, pneumonia, or edema of lungs. Exposure to concentrations of 0.13 to 0.2 percent can be lethal to humans in a few minutes. Provide ventilation to limit exposure. Reacts with metals, producing hydrogen gas.

5.2.2 Hydrofluoric Acid (HF). Highly corrosive to eyes, skin, nose, throat, and lungs. Reaction to exposure may be delayed by 24 hours or more. Provide ventilation to limit exposure.

5.2.3 Hydrogen Peroxide (H_2O_2). Very harmful to eyes. 30% H_2O_2 can burn skin, nose, and lungs.

5.2.4 Nitric Acid (HNO_3). Highly corrosive to eyes, skin, nose, and lungs. Vapors are highly toxic and can cause bronchitis, pneumonia, or edema of lungs. Reaction to inhalation may be delayed as long as 30 hours and still be fatal. Provide ventilation to limit exposure. Strong oxidizer. Hazardous reaction may occur with organic materials such as solvents.

5.2.5 Sodium Hydroxide (NaOH). Causes severe damage to eyes and skin. Inhalation causes irritation to nose, throat, and lungs. Reacts exothermically with limited amounts of water.

6.0 Equipment and Supplies

6.1 Sample Collection and Preparation. The following items are required for sample collection and preparation:

6.1.1 Parr Acid Digestion Bomb. Stainless steel with vapor-tight Teflon cup and cover.

6.1.2 Volumetric Pipets. 2- and 5-ml sizes.

6.1.3 Volumetric Flask. 50-ml polypropylene with screw caps, (one needed per standard).

6.1.4 Funnel. Polyethylene or polypropylene.

6.1.5 Oven. Capable of maintaining a temperature of approximately 105 °C (221 °F).

6.1.6 Analytical Balance. To measure to within 0.1 mg.

6.2 Analysis. The following items are required for analysis:

6.2.1 Spectrophotometer and Recorder. Equipped with an electrodeless discharge lamp and a background corrector to measure absorbance at 193.7 nm. For measuring samples having less than 10 µg As/ml, use a graphite furnace or vapor generator accessory. The recorder shall match the output of the spectrophotometer.

6.2.2 Volumetric Flasks. Class A, 50-ml (one needed per sample and blank), 500-ml, and 1-liter.

6.2.3 Volumetric Pipets. Class A, 1-, 5-, 10-, and 25-ml sizes.

7.0 Reagents and Standards.

Unless otherwise indicated, it is intended that all reagents conform to the specifications established by the Committee on Analytical Reagents of the American Chemical Society, where such specifications are available; otherwise, use the best available grade.

7.1 Sample Collection and Preparation. The following reagents are required for sample collection and preparation:

7.1.1 Water. Deionized distilled to meet ASTM D 1193–77 or 91 Type 3 (incorporated by reference—See §61.18). When high concentrations of organic matter are not expected to be present, the $KMnO_4$ test for oxidizable organic matter may be omitted. Use in all dilutions requiring water.

7.1.2 Nitric Acid Concentrated.

7.1.3 Nitric Acid, 0.5 N. In a 1-liter volumetric flask containing water, add 32 ml of concentrated HNO_3 and dilute to volume with water.

7.1.4 Hydrofluoric Acid, Concentrated.

7.1.5 Potassium Chloride (KCl) Solution, 10 percent weight by volume (W/V). Dissolve 10 g KCl in water, add 3 ml concentrated HNO_3, and dilute to 100 ml.

7.1.6 Filter. Teflon filters, 3-micron porosity, 47-mm size. (Available from Millipore Co., type FS, Catalog Number FSLW04700.)

7.1.7 Sodium Borohydride ($NaBH_4$), 5 Percent (W/V). Dissolve 50.0 g of $NaBH_4$ in about 500 ml of 0.1 N NaOH in a 1-liter volumetric flask. Then, dilute to exactly 1.0 liter with 0.1 N NaOH.

7.1.8 Nickel Nitrate, 5 Percent Ni (W/V). Dissolve 24.780 g of nickel nitrate hexahydrate [$Ni(NO_3)_2$ $6H_2O$] in water in a 100-ml volumetric flask, and dilute to 100 ml with water.

7.1.9 Nickel Nitrate, 1 Percent Ni (W/V). Pipet 20 ml of 5 percent nickel nitrate solution into a 100-ml volumetric flask, and dilute to 100 ml with water.

7.2 Analysis. The following reagents and standards are required for analysis:

7.2.1 Water. Same as in Section 7.1.1.

7.2.2 Sodium Hydroxide, 0.1 N. Dissolve 2.00 g of NaOH in water in a 500-ml volumetric flask. Dilute to volume with water.

7.2.3 Nitric Acid, 0.5 N. Same as in Section 7.1.3.

7.2.4 Potassium Chloride Solution, 10 percent. Same as in Section 7.1.5.

7.2.5 Hydrochloric Acid, Concentrated.

7.2.6 Potassium Iodide (KI), 30 Percent (W/V). Dissolve 300 g of KI in about 500 ml of water in a 1-liter volumetric flask. Then, dilute to exactly 1.0 liter with water.

7.2.7 Hydrogen Peroxide, 3 Percent by Volume. Pipet 50 ml of 30 percent H_2O_2 into a 500-ml volumetric flask, and dilute to exactly 500 ml with water.

7.2.8 Stock Arsenic Standard, 1 mg As/ml. Dissolve 1.3203 g of primary grade As_2O_3 in 20 ml of 0.1 N NaOH. Slowly add 30 ml of concentrated HNO_3, and heat in an oven at 105 °C (221 °F) for 2 hours. Allow to cool, and dilute to 1 liter with deionized distilled water.

7.2.9 Nitrous Oxide. Suitable quality for AAS analysis.

7.2.10 Acetylene. Suitable quality for AAS analysis.

7.2.11 Quality Assurance Audit Samples. When making compliance determinations, and upon availability, audit samples may be obtained from the appropriate EPA regional Office or from the responsible enforcement authority.

NOTE: The responsible enforcement authority should be notified at least 30 days prior to the test date to allow sufficient time for sample delivery.

8.0 Sample Collection, Preservation, Transport, and Storage

8.1 Sample Collection. A sample that is representative of the ore lot to be tested must be taken prior to analysis. (A portion of the samples routinely collected for metals analysis may be used provided the sample is representative of the ore being tested.)

8.2 Sample Preparation. The sample must be ground into a finely pulverized state.

9.0 Quality Control

Section	Quality control measure	Effect
10.2	Spectrophotometer calibration	Ensure linearity of spectrophotometer response to standards.
11.5	Check for matrix effects	Eliminate matrix effects
11.6	Audit sample analysis	Evaluate analyst's technique and standards preparation.

10.0 Calibration and Standardizations

NOTE: Maintain a laboratory log of all calibrations.

10.1 Preparation of Standard Solutions. Pipet 1, 5, 10, and 25 ml of the stock As solution into separate 100-ml volumetric flasks. Add 10 ml KCl solution and dilute to the mark with 0.5 N HNO_3. This will give standard concentrations of 10, 50, 100, and 250 μg As/ml. For low-level arsenic samples that require the use of a graphite furnace or vapor generator, follow the procedures in Section 11.3:1. Dilute 10 ml of KCl solution to 100 ml with 0.5 N HNO_3 and use as a reagent blank.

10.2 Calibration Curve. Analyze the reagent blank and each standard solution according to the procedures outlined in Section 11.3. Repeat this procedure on each standard solution until two consecutive peaks agree within 3 percent of their average value. Subtract the average peak height (or peak area) of the blank—which must be less than 2 percent of recorder full scale—from the averaged peak heights of each standard solution.

If the blank absorbance is greater than 2 percent of full-scale, the probable cause is Hg contamination of a reagent or carry-over of As from a previous sample. Prepare the calibration curve by plotting the corrected peak height of each standard solution versus the corresponding final total As weight in the solution.

10.3 Spectrophotometer Calibration Quality Control. Calculate the least squares slope of the calibration curve. The line must pass through the origin or through a point no further from the origin than ±2 percent of the recorder full scale. Multiply the corrected peak height by the reciprocal of the least squares slope to determine the distance each calibration point lies from the theoretical calibration line. The difference between the calculated concentration values and the actual concentrations must be less than 7 percent for all standards.

NOTE: For instruments equipped with direct concentration readout devices, preparation of a standard curve will not be necessary. In all cases, follow calibration and operational procedures in the manufacturer's instruction manual.

11.0 Analytical Procedure

11.1 Sample Preparation. Weigh 50 to 500 mg of finely pulverized sample to the nearest 0.1 mg. Transfer the sample into the Teflon cup of the digestion bomb, and add 2 ml each of concentrated HNO_3 and HF. Seal the bomb immediately to prevent the loss of any volatile arsenic compounds that may form. Heat in an oven at 105 °C (221 °F) for 2 hours. Remove the bomb from the oven and allow to cool. Using a Teflon filter, quantitatively filter the digested sample into a 50-ml polypropylene volumetric flask. Rinse the bomb three times with small portions of 0.5 N HNO_3, and filter the rinses into the flask. Add 5 ml of KCl solution to the flask, and dilute to 50 ml with 0.5 N HNO_3.

11.2 Spectrophotometer Preparation.

11.2.1 Turn on the power; set the wavelength, slit width, and lamp current. Adjust the background corrector as instructed by the manufacturer's manual for the particular atomic absorption spectrophotometer. Adjust the burner and flame characteristics as necessary.

11.2.2 Develop a spectrophotometer calibration curve as outlined in Sections 10.2 and 10.3.

11.3 Arsenic Determination. Analyze an appropriately sized aliquot of each diluted sample (from Section 11.1) until two consecutive peak heights agree within 3 percent of their average value. If applicable, follow the procedures outlined in Section 11.3.1. If the sample concentration falls outside the range of the calibration curve, make an appropriate dilution with 0.5 N HNO_3 so that the final concentration falls within the range of the curve. Using the calibration curve, determine the As concentration in each sample.

NOTE: Because instruments vary between manufacturers, no detailed operating instructions will be given here. Instead, the instrument manufacturer's detailed operating instructions should be followed.

11.3.1 Arsenic Determination at Low Concentration. The lower limit of flame AAS is 10 µg As/ml. If the arsenic concentration of any sample is at a lower level, use the vapor generator or graphite furnace which is available as an accessory component. Flame, graphite furnace, or vapor generators may be used for samples whose concentrations are between 10 and 30 µg/ml. Follow the manufacturer's instructions in the use of such equipment.

11.3.1.1 Vapor Generator Procedure. Place a sample containing between 0 and 5 µg of arsenic in the reaction tube, and dilute to 15 ml with water. Since there is some trial and error involved in this procedure, it may be necessary to screen the samples by conventional AAS until an approximate concentration is determined. After determining the approximate concentration, adjust the volume of the sample accordingly. Pipet 15 ml of concentrated HCl into each tube. Add 1 ml of 30 percent KI solution. Place the reaction tube into a 50 °C (120 °F) water bath for 5 minutes. Cool to room temperature. Connect the reaction tube to the vapor generator assembly. When the instrument response has returned to baseline, inject 5.0 ml of 5 percent $NaBH_4$ and integrate the resulting spectrophotometer signal over a 30-second time period.

11.3.1.2 Graphite Furnace Procedure. Pipet 5 ml of the digested solution into a 10-ml volumetric flask. Add 1 ml of the 1 percent nickel nitrate solution, 0.5 ml of 50 percent HNO_3, and 1 ml of the 3 percent H_2O_2, and dilute to 10 ml with water. The sample is now ready to inject in the furnace for analysis.

11.4 Run a blank and standard at least after every five samples to check the spectrophotometer calibration. The peak height of the blank must pass through a point no further from the origin than ±2 percent of the recorder full scale. The difference between the measured concentration of the standard (the product of the corrected average peak height and the reciprocal of the least squares slope) and the actual concentration of the standard must be less than 7 percent, or recalibration of the analyzer is required.

11.5 Mandatory Check for Matrix Effects on the Arsenic Results. Same as Method 12, Section 11.5.

11.6 Audit Sample Analysis.

11.6.1 When the method is used to analyze samples to demonstrate compliance with a source emission regulation, a set of EPA

audit samples must be analyzed, subject to availability.

11.6.2 Concurrently analyze the audit samples and the compliance samples in the same manner to evaluate the technique of the analyst and the standards preparation.

NOTE: It is recommended that known quality control samples be analyzed prior to the compliance and audit sample analyses to optimize the system accuracy and precision. These quality control samples may be obtained by contacting the appropriate EPA regional Office or the responsible enforcement authority.

11.6.3 The same analyst, analytical reagents, and analytical system shall be used for the compliance samples and the EPA audit samples. If this condition is met, duplicate auditing of subsequent compliance analyses for the same enforcement agency within a 30-day period is waived. An audit sample set may not be used to validate different sets of compliance samples under the jurisdiction of separate enforcement agencies, unless prior arrangements have been made with both enforcement agencies.

11.7 Audit Sample Results.

11.7.1 Calculate the audit sample concentrations in g/m^3 and submit results using the instructions provided with the audit samples.

11.7.2 Report the results of the audit samples and the compliance determination samples along with their identification numbers, and the analyst's name to the responsible enforcement authority. Include this information with reports of any subsequent compliance analyses for the same enforcement authority during the 30-day period.

11.7.3 The concentrations of the audit samples obtained by the analyst shall agree within 10 percent of the actual concentrations. If the 10 percent specification is not met, reanalyze the compliance and audit samples, and include initial and reanalysis values in the test report.

11.7.4 Failure to meet the 10 percent specification may require retests until the audit problems are resolved. However, if the audit results do not affect the compliance or noncompliance status of the affected facility, the Administrator may waive the reanalysis requirement, further audits, or retests and accept the results of the compliance test. While steps are being taken to resolve audit analysis problems, the Administrator may also choose to use the data to determine the compliance or noncompliance status of the affected facility.

12.0 Data Analysis and Calculations

12.1 Calculate the percent arsenic in the ore sample as follows:

$$\% \text{ As} = \frac{5 C_a F_d}{W} \qquad \text{Eq. 108A-1}$$

Where:

C_a = Concentration of As as read from the standard curve, µg/ml.

F_d = Dilution factor (equals to 1 if the sample has not been diluted).

W = Weight of ore sample analyzed, mg.

5 = (50 ml sample ‘‘ 100)/(10^3 µg/mg).

13.0 Method Performance

13.1 Sensitivity. The lower limit of flame AAS is 10 µg As/ml. The analytical procedure includes provisions for the use of a graphite furnace or vapor generator for samples with a lower arsenic concentration.

14.0 Pollution Prevention. [Reserved]

15.0 Waste Management. [Reserved]

16.0 References

Same as References 1 through 9 of Section 17.0 of Method 5, with the addition of the following:

1. Perkin Elmer Corporation. Analytical Methods of Atomic Absorption Spectrophotometry. 303–0152. Norwalk, Connecticut. September 1976. pp 5–6.

2. Ringwald, D. Arsenic Determination on Process Materials from ASARCO's Copper Smelter in Tacoma, Washington. Unpublished Report. Prepared for Emission Measurement Branch, Emission Standards and Engineering Division, U.S. Environmental Protection Agency, Research Triangle Park, North Carolina. August 1980. 35 pp.

3. Stack Sampling Safety Manual (Draft). U.S. Environmental Protection Agency, Office of Air Quality Planning and Standard, Research Triangle Park, NC. September 1978.

17.0 Tables, Diagrams, Flowcharts, and Validation Data. [Reserved]

METHOD 108B—DETERMINATION OF ARSENIC CONTENT IN ORE SAMPLES FROM NONFERROUS SMELTERS

NOTE: This method does not include all of the specifications (*e.g.*, equipment and supplies) and procedures (*e.g.*, sampling and analytical) essential to its performance. Some material is incorporated by reference from

other methods in this appendix and in appendix A to 40 CFR part 60. Therefore, to obtain reliable results, persons using this method should have a thorough knowledge of at least the following additional test methods: Method 12 and Method 108A.

1.0 Scope and Application

1.1 Analytes.

Analyte	CAS No.	Sensitivity
Arsenic compounds as arsenic (As).	7440–38–2	Lower limit 10 μg/ml.

1.2 Applicability. This method applies to the determination of inorganic As content of process ore and reverberatory matte samples from nonferrous smelters and other sources as specified in an applicable subpart of the regulations. Samples resulting in an analytical concentration greater than 10 μg As/ml may be analyzed by this method. For lower level arsenic samples, Method 108C should be used.

1.3 Data Quality Objectives. Adherence to the requirements of this method will enhance the quality of the data obtained from air pollutant sampling methods.

2.0 Summary of Method

Arsenic bound in ore samples is liberated by acid digestion and analyzed by flame atomic absorption spectrophotometry (AAS).

3.0 Definitions [Reserved]

4.0 Interferences

Analysis for As by flame AAS is sensitive to the chemical composition and to the physical properties (*e.g.*, viscosity, pH) of the sample. The analytical procedure includes a check for matrix effects (Section 11.4).

5.0 Safety

5.1 Disclaimer. This method may involve hazardous materials, operations, and equipment. This test method may not address all of the safety problems associated with its use. It is the responsibility of the user to establish appropriate safety and health practices and determine the applicability of regulatory limitations prior to performing this test method.

5.2 Corrosive Reagents. The following reagents are hazardous. Personal protective equipment and safe procedures that prevent chemical splashes are recommended. If contact occurs, immediately flush with copious amounts of water for at least 15 minutes. Remove clothing under shower and decontaminate. Treat residual chemical burns as thermal burns.

5.2.1 Hydrochloric acid (HCl). Highly corrosive liquid with toxic vapors. Vapors are highly irritating to eyes, skin, nose, and lungs, causing severe damage. May cause bronchitis, pneumonia, or edema of lungs. Exposure to concentrations of 0.13 to 0.2 percent can be lethal to humans in a few minutes. Provide ventilation to limit exposure. Reacts with metals, producing hydrogen gas.

5.2.2 Hydrofluoric Acid (HF). Highly corrosive to eyes, skin, nose, throat, and lungs. Reaction to exposure may be delayed by 24 hours or more. Provide ventilation to limit exposure.

5.2.3 Nitric Acid (HNO_3). Highly corrosive to eyes, skin, nose, and lungs. Vapors are highly toxic and can cause bronchitis, pneumonia, or edema of lungs. Reaction to inhalation may be delayed as long as 30 hours and still be fatal. Provide ventilation to limit exposure. Strong oxidizer. Hazardous reaction may occur with organic materials such as solvents.

5.2.4 Perchloric Acid ($HClO_4$). Corrosive to eyes, skin, nose, and throat. Provide ventilation to limit exposure. Very strong oxidizer. Keep separate from water and oxidizable materials to prevent vigorous evolution of heat, spontaneous combustion, or explosion. Heat solutions containing $HClO_4$ only in hoods specifically designed for $HClO_4$.

6.0 Equipment and Supplies

6.1 Sample Preparation. The following items are required for sample preparation:

6.1.1 Teflon Beakers. 150-ml.

6.1.2 Graduated Pipets. 5-ml disposable.

6.1.3 Graduated Cylinder. 50-ml.

6.1.4 Volumetric Flask. 100-ml.

6.1.5 Analytical Balance. To measure within 0.1 mg.

6.1.6 Hot Plate.

6.1.7 Perchloric Acid Fume Hood.

6.2 Analysis. The following items are required for analysis:

6.2.1 Spectrophotometer. Equipped with an electrodeless discharge lamp and a background corrector to measure absorbance at 193.7 nm.

6.2.2 Beaker and Watch Glass. 400-ml.

6.2.3 Volumetric Flask. 1-liter.

6.2.4 Volumetric Pipets. 1-, 5-, 10-, and 25-ml.

7.0 Reagents and Standards

Unless otherwise indicated, it is intended that all reagents conform to the specifications established by the Committee on Analytical Reagents of the American Chemical

Society, where such specifications are available; otherwise, use the best available grade.

7.1 Sample Preparation. The following reagents are required for sample preparation:

7.1.1 Water. Deionized distilled to meet ASTM D 1193–77 or 91 Type 3 (incorporated by reference—see §61.18).

7.1.2 Nitric Acid, Concentrated.

7.1.3 Hydrofluoric Acid, Concentrated.

7.1.4 Perchloric Acid, 70 Percent.

7.1.5 Hydrochloric Acid, Concentrated.

7.2 Analysis. The following reagents and standards are required for analysis:

7.2.1 Water. Same as in Section 7.1.1.

7.2.2 Stock Arsenic Standard, 1.0 mg As/ml. Dissolve 1.3203 g of primary grade As_20_3 [dried at 105 °C (221 °F)] in a 400-ml beaker with 10 ml of HNO_3 and 5 ml of HCl. Cover with a watch glass, and heat gently until dissolution is complete. Add 10 ml of HNO_3 and 25 ml of $HClO_4$, evaporate to strong fumes of $HClO_4$, and reduce to about 20 ml volume. Cool, add 100 ml of water and 100 ml of HCl, and transfer quantitatively to a 1-liter volumetric flask. Dilute to volume with water and mix.

7.2.3 Acetylene. Suitable quality for AAS analysis.

7.2.4 Air. Suitable quality for AAS analysis.

7.2.5 Quality Assurance Audit Samples. Same as in Method 108A, Section 7.2.11.

8.0 Sample Collection, Preservation, Transport, and Storage

Same as in Method 108A, Sections 8.1 and 8.2.

9.0 Quality Control

Section	Quality control measure	Effect
10.2	Spectrophotometer calibration	Ensure linearity of spectrophotometer response to standards.
11.4	Check for matrix effects	Eliminate matrix effects.
11.5	Audit sample analysis	Evaluate analyst's technique and standards preparation.

10.0 Calibration and Standardization

NOTE: Maintain a laboratory log of all calibrations.

10.1 Preparation of Standard Solutions. Pipet 1, 5, 10, and 25 ml of the stock As solution into separate 100-ml volumetric flasks. Add 2 ml of $HClO_4$, 10 ml of HCl, and dilute to the mark with water. This will provide standard concentrations of 10, 50, 100, and 250 µg As/ml.

10.2 Calibration Curve and Spectrophotometer Calibration Quality Control. Same as Method 108A, Sections 10.2 and 10.3

11.0 Analytical Procedure

11.1 Sample Preparation. Weigh 100 to 1000 mg of finely pulverized sample to the nearest 0.1 mg. Transfer the sample to a 150-ml Teflon beaker. Dissolve the sample by adding 15 ml of HNO_3, 10 ml of HCl, 10 ml of HF, and 10 ml of $HClO_4$ in the exact order as described, and let stand for 10 minutes. In a $HClO_4$ fume hood, heat on a hot plate until 2–3 ml of $HClO_4$ remain, then cool. Add 20 ml of water and 10 ml of HCl. Cover and warm until the soluble salts are in solution. Cool, and transfer quantitatively to a 100-ml volumetric flask. Dilute to the mark with water.

11.2 Spectrophotometer Preparation. Same as in Method 108A, Section 11.2.

11.3 Arsenic Determination. If the sample concentration falls outside the range of the calibration curve, make an appropriate dilution with 2 percent $HClO_4$/10 percent HCl (prepared by diluting 2 ml concentrated $HClO_4$ and 10 ml concentrated HCl to 100 ml with water) so that the final concentration falls within the range of the curve. Using the calibration curve, determine the As concentration in each sample.

NOTE: Because instruments vary between manufacturers, no detailed operating instructions will be given here. Instead, the instrument manufacturer's detailed operating instructions should be followed.

Run a blank and standard at least after every five samples to check the spectrophotometer calibration. The peak height of the blank must pass through a point no further from the origin than ±2 percent of the recorder full scale. The difference between the measured concentration of the standard (the product of the corrected average peak height and the reciprocal of the least squares slope) and the actual concentration of the standard must be less than 7 percent, or recalibration of the analyzer is required.

11.4 Mandatory Check for Matrix Effects on the Arsenic Results. Same as Method 12, Section 11.5.

11.5 Audit Sample Analysis. Same as in Method 108A, Section 11.6.

12.0 Data Analysis and Calculations

Same as in Method 108A, Section 12.0.

13.0 Method Performance

13.1 Sensitivity. The lower limit of flame AAS is 10 µg As/ml.

14.0 Pollution Prevention [Reserved]

15.0 Waste Management [Reserved]

16.0 References

Same as in Method 108A, Section 16.0.

17.0 Tables, Diagrams, Flowcharts, and Validation Data [Reserved]

METHOD 108C—DETERMINATION OF ARSENIC CONTENT IN ORE SAMPLES FROM NONFERROUS SMELTERS (MOLYBDENUM BLUE PHOTOMETRIC PROCEDURE)

NOTE: This method does not include all of the specifications (*e.g.*, equipment and supplies) and procedures (*e.g.*, sampling and analytical) essential to its performance. Some material is incorporated by reference from other methods in this part. Therefore, to obtain reliable results, persons using this method should have a thorough knowledge of at least Method 108A.

1.0 Scope and Application

1.1 Analytes.

Analyte	CAS No.	Sensitivity
Arsenic compounds as arsenic (As).	7440–38–2	Lower limit 0.0002 percent As by weight.

1.2 Applicability. This method applies to the determination of inorganic As content of process ore and reverberatory matte samples from nonferrous smelters and other sources as specified in an applicable subpart of the regulations.

1.3 Data Quality Objectives. Adherence to the requirements of this method will enhance the quality of the data obtained from air pollutant sampling methods.

2.0 Summary of Method

Arsenic bound in ore samples is liberated by acid digestion and analyzed by the molybdenum blue photometric procedure.

3.0 Definitions. [Reserved]

4.0 Interferences. [Reserved]

5.0 Safety

5.1 Disclaimer. This method may involve hazardous materials, operations, and equipment. This test method may not address all of the safety problems associated with its use. It is the responsibility of the user to establish appropriate safety and health practices and determine the applicability of regulatory limitations prior to performing this test method.

5.2 Corrosive Reagents. The following reagents are hazardous. Personal protective equipment and safe procedures that prevent chemical splashes are recommended. If contact occurs, immediately flush with copious amounts of water for at least 15 minutes. Remove clothing under shower and decontaminate. Treat residual chemical burns as thermal burns.

5.2.1 Hydrochloric Acid (HCl). Highly corrosive liquid with toxic vapors. Vapors are highly irritating to eyes, skin, nose, and lungs, causing severe damage. May cause bronchitis, pneumonia, or edema of lungs. Exposure to concentrations of 0.13 to 0.2 percent can be lethal to humans in a few minutes. Provide ventilation to limit exposure. Reacts with metals, producing hydrogen gas.

5.2.2 Hydrofluoric Acid (HF). Highly corrosive to eyes, skin, nose, throat, and lungs. Reaction to exposure may be delayed by 24 hours or more. Provide ventilation to limit exposure.

5.2.3 Nitric Acid (HNO_4). Highly corrosive to eyes, skin, nose, and lungs. Vapors are highly toxic and can cause bronchitis, pneumonia, or edema of lungs. Reaction to inhalation may be delayed as long as 30 hours and still be fatal. Provide ventilation to limit exposure. Strong oxidizer. Hazardous reaction may occur with organic materials such as solvents.

5.2.4 Perchloric Acid ($HClO_4$). Corrosive to eyes, skin, nose, and throat. Provide ventilation to limit exposure. Very strong oxidizer. Keep separate from water and oxidizable materials to prevent vigorous evolution of heat, spontaneous combustion, or explosion. Heat solutions containing $HClO_4$ only in hoods specifically designed for $HClO_4$.

5.2.5 Sulfuric acid (H_2SO_4). Rapidly destructive to body tissue. Will cause third degree burns. Eye damage may result in blindness. Inhalation may be fatal from spasm of the larynx, usually within 30 minutes. May cause lung tissue damage with edema. 3 mg/m^3 will cause lung damage in uninitiated. 1 mg/m^3 for 8 hours will cause lung damage or, in higher concentrations, death. Provide ventilation to limit inhalation. Reacts violently with metals and organics.

6.0 Equipment and Supplies

6.1 Sample Preparation. The following items are required for sample preparation:

6.1.1 Analytical Balance. To measure to within 0.1 mg.

6.1.2 Erlenmeyer Flask. 300-ml.

6.1.3 Hot Plate.

6.1.4 Distillation Apparatus. No. 6, in ASTM E 50–82, 86, or 90 (Reapproved 1995)(incorporated by reference—see §61.18); detailed in Figure 108C–1.

6.1.5 Graduated Cylinder. 50-ml.

6.1.6 Perchloric Acid Fume Hood.

6.2 Analysis. The following items are required for analysis:

6.2.1 Spectrophotometer. Capable of measuring at 660 nm.

6.2.2 Volumetric Flasks. 50- and 100-ml.

7.0 Reagents and Standards

Unless otherwise indicated, it is intended that all reagents conform to the specifications established by the Committee on Analytical Reagents of the American Chemical Society, where such specifications are available; otherwise, use the best available grade.

7.1 Sample Preparation. The following reagents are required for sample preparation:

7.1.1 Water. Deionized distilled to meet ASTM D 1193–77 or 91 Type 3 (incorporated by reference—see §61.18). When high concentrations of organic matter are not expected to be present, the $KMnO_4$ test for oxidizable organic matter may be omitted. Use in all dilutions requiring water.

7.1.2 Nitric Acid, Concentrated.

7.1.3 Hydrofluoric Acid, Concentrated.

7.1.4 Sulfuric Acid, Concentrated.

7.1.5 Perchloric Acid, 70 Percent.

7.1.6 Hydrochloric Acid, Concentrated.

7.1.7 Dilute Hydrochloric Acid. Add one part concentrated HCl to nine parts water.

7.1.8 Hydrazine Sulfate ($(NH_2)_2 \cdot H_2SO_4$).

7.1.9 Potassium Bromide (KBr).

7.1.10 Bromine Water, Saturated.

7.2 Analysis. The following reagents and standards are required for analysis:

7.2.1 Water. Same as in Section 7.1.1.

7.2.2 Methyl Orange Solution, 1 g/liter.

7.2.3 Ammonium Molybdate Solution, 5 g/liter. Dissolve 0.5 g $(NH_4)Mo_7O_{24} \cdot 4H_2O$ in water in a 100-ml volumetric flask, and dilute to the mark. This solution must be freshly prepared.

7.2.4 Standard Arsenic Solution, 10 µg As/ml. Dissolve 0.13203 g of As_2O_3 in 100 ml HCl in a 1-liter volumetric flask. Add 200 ml of water, cool, dilute to the mark with water, and mix. Transfer 100 ml of this solution to a 1-liter volumetric flask, add 40 ml HCl, cool, dilute to the mark, and mix.

7.2.5 Hydrazine Sulfate Solution, 1 g/liter. Dissolve 0.1 g of $[(NH_2)_2 \cdot H_2SO_4]$ in water, and dilute to 100 ml in a volumetric flask. This solution must be freshly prepared.

7.2.6 Potassium Bromate ($KBrO_3$) Solution, 0.03 Percent Weight by Volume (W/V). Dissolve 0.3 g $KBrO_3$ in water, and dilute to 1 liter with water.

7.2.7 Ammonium Hydroxide (NH_4OH), Concentrated.

7.2.8 Boiling Granules.

7.2.9 Hydrochloric Acid, 50 percent by volume. Dilute equal parts concentrated HCl with water.

7.2.10 Quality Assurance Audit Samples. Same as in Method 108A, Section 7.2.11.

8.0 Sample Collection, Preservation, Transport, and Storage

Same as in Method 108A, Sections 8.1 and 8.2.

9.0 Quality Control

Section	Quality control measure	Effect
10.2	Calibration curve preparation	Ensure linearity of spectrophotometric analysis of standards.
11.3	Audit sample analysis	Evaluate analyst's technique and standards preparation.

10.0 Calibration and Standardizations

NOTE: Maintain a laboratory log of all calibrations.

10.1 Preparation of Standard Solutions. Transfer 1.0, 2.0, 4.0, 8.0, 12.0, 16.0, and 20.0 ml of standard arsenic solution (10 µg/ml) to each of seven 50-ml volumetric flasks. Dilute to 20 ml with dilute HCl. Add one drop of methyl orange solution and neutralize to the yellow color with dropwise addition of NH_4OH. Just bring back to the red color by dropwise addition of dilute HCl, and add 10 ml in excess. Proceed with the color development as described in Section 11.2.

10.2 Calibration Curve. Plot the spectrophotometric readings of the calibration solutions against µg As per 50 ml of solution. Use this curve to determine the As concentration of each sample.

10.3 Spectrophotometer Calibration Quality Control. Calculate the least squares slope of the calibration curve. The line must pass through the origin or through a point no further from the origin than ±2 percent of the recorder full scale. Multiply the corrected peak height by the reciprocal of the least squares slope to determine the distance each calibration point lies from the theoretical calibration line. The difference between the calculated concentration values and the actual concentrations must be less than 7 percent for all standards.

11.0 Analytical Procedure

11.1 Sample Preparation.

11.1.1 Weigh 1.0 g of finely pulverized sample to the nearest 0.1 mg. Transfer the sample to a 300 ml Erlenmeyer flask and add 15 ml of HNO_3, 4 ml HCl, 2 ml HF, 3 ml $HClO_4$, and 15 ml H_2SO_4, in the order listed. In a $HClO_4$ fume hood, heat on a hot plate to decompose the sample. Then heat while swirling over an open flame until dense white fumes evolve. Cool, add 15 ml of water, swirl to hydrate the H_2SO_4 completely, and add several boiling granules. Cool to room temperature.

11.1.2 Add 1 g of KBr, 1 g hydrazine sulfate, and 50 ml HCl. Immediately attach the distillation head with thermometer and dip the side arm into a 50-ml graduated cylinder containing 25 ml of water and 2 ml of bromine water. Keep the graduated cylinder immersed in a beaker of cold water during distillation. Distill until the temperature of the vapor in the flask reaches 107 °C (225 °F). When distillation is complete, remove the flask from the hot plate, and simultaneously wash down the side arm with water as it is removed from the cylinder.

11.1.3 If the expected arsenic content is in the range of 0.0020 to 0.10 percent, dilute the distillate to the 50-ml mark of the cylinder with water, stopper, and mix. Transfer a 5.0-ml aliquot to a 50-ml volumetric flask. Add 10 ml of water and a boiling granule. Place the flask on a hot plate, and heat gently until the bromine is expelled and the color of methyl orange indicator persists upon the addition of 1 to 2 drops. Cool the flask to room temperature. Neutralize just to the yellow color of the indicator with dropwise additions of NH_4OH. Bring back to the red color by dropwise addition of dilute HCl, and add 10 ml excess. Proceed with the molybdenum blue color development as described in Section 11.2.

11.1.4 If the expected arsenic content is in the range of 0.0002 to 0.0010 percent As, transfer either the entire initial distillate or the measured remaining distillate from Section 11.1.2 to a 250-ml beaker. Wash the cylinder with two successive portions of concentrated HNO_3, adding each portion to the distillate in the beaker. Add 4 ml of concentrated $HClO_4$, a boiling granule, and cover with a flat watch glass placed slightly to one side. Boil gently on a hot plate until the volume is reduced to approximately 10 ml. Add 3 ml of HNO_3, and continue the evaporation until $HClO_4$ is refluxing on the beaker cover. Cool briefly, rinse the underside of the watch glass and the inside of the beaker with about 3–5 ml of water, cover, and continue the evaporation to expel all but 2 ml of the $HClO_4$.

NOTE: If the solution appears cloudy due to a small amount of antimony distilling over, add 4 ml of 50 percent HCl and 5 ml of water, cover, and warm gently until clear. If cloudiness persists, add 5 ml of HNO_3 and 2 ml H_2SO_4. Continue the evaporation of volatile acids to solubilize the antimony until dense white fumes of H_2SO_4 appear. Retain at least 1 ml of the H_2SO_4.

11.1.5 To the 2 ml of $HClO_4$ solution or 1 ml of H_2SO_4 solution, add 15 ml of water, boil gently for 2 minutes, and then cool. Proceed with the molybdenum blue color development by neutralizing the solution directly in the beaker just to the yellow indicator color by dropwise addition of NH_4OH. Obtain the red color by dropwise addition of dilute HCl. Transfer the solution to a 50-ml volumetric flask. Rinse the beaker successively with 10 ml of dilute HCl, followed by several small portions of water. At this point the volume of solution in the flask should be no more than 40 ml. Continue with the color development as described in Section 11.2.

11.2 Analysis.

11.2.1 Add 1 ml of $KBrO_3$ solution to the flask and heat on a low-temperature hot plate to about 50 °C (122 °F) to oxidize the arsenic and methyl orange. Add 5.0 ml of ammonium molybdate solution to the warm solution and mix. Add 2.0 ml of hydrazine sulfate solution, dilute until the solution comes within the neck of the flask, and mix. Place the flask in a 400 ml beaker, 80 percent full of boiling water, for 10 minutes. Enough heat must be supplied to prevent the water bath from cooling much below the boiling point upon inserting the volumetric flask. Remove the flask, cool to room temperature, dilute to the mark, and mix.

11.2.2 Transfer a suitable portion of the reference solution to an absorption cell, and adjust the spectrophotometer to the initial setting using a light band centered at 660 nm. While maintaining this spectrophotometer adjustment, take the readings of the calibration solutions followed by the samples.

11.3 Audit Sample Analysis. Same as in Method 108A, Section 11.6.

12.0 Data Analysis and Calculations

Same as in Method 108A, Section 12.0.

13.0 Method Performance. [Reserved]

14.0 Pollution Prevention. [Reserved]

15.0 Waste Management. [Reserved]

16.0 References

1. Ringwald, D. Arsenic Determination on Process Materials from ASARCO's Copper Smelter in Tacoma, Washington. Unpublished Report. Prepared for the Emission Measurement Branch, Technical Support Division, U.S. Environmental Protection Agency, Research Triangle Park, North Carolina. August 1980. 35 pp.

17.0 Tables, Diagrams, Flowcharts, and Validation Data

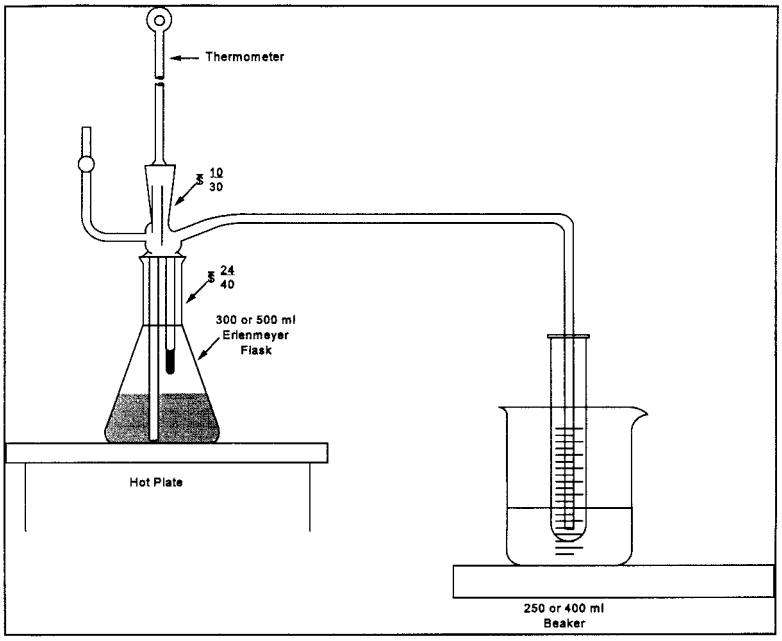

Figure 108C-1. Distillation Apparatus.

METHOD 111—DETERMINATION OF POLONIUM–210 EMISSIONS FROM STATIONARY SOURCES

Note: This method does not include all of the specifications (*e.g.*, equipment and supplies) and procedures (*e.g.*, sampling and analytical) essential to its performance. Some material is incorporated by reference from methods in appendix A to 40 CFR part 60. Therefore, to obtain reliable results, persons using this method should have a thorough knowledge of at least the following additional test methods: Method 1, Method 2, Method 3, and Method 5.

1.0 Scope and Application

1.1 Analytes.

Analyte	CAS No.	Sensitivity
Polonium	7440–08–6	Not specified.

1.2 Applicability. This method is applicable for the determination of the polonium-210 content of particulate matter samples collected from stationary source exhaust stacks, and for the use of these data to calculate polonium-210 emissions from individual sources and from all affected sources at a facility.

1.3 Data Quality Objectives. Adherence to the requirements of this method will enhance the quality of the data obtained from air pollutant sampling methods.

2.0 Summary of Method

A particulate matter sample, collected according to Method 5, is analyzed for polonium-210 content: the polonium-210 in the sample is put in solution, deposited on a metal disc, and the radioactive disintegration rate measured. Polonium in acid solution spontaneously deposits on surfaces of metals that are more electropositive than polonium. This principle is routinely used in the radiochemical analysis of polonium-210. Data reduction procedures are provided, allowing the calculation of polonium-210 emissions from individual sources and from all

affected sources at a facility, using data obtained from Methods 2 and 5 and from the analytical procedures herein.

3.0 Definitions [Reserved]

4.0 Interferences [Reserved]

5.0 Safety

5.1 Disclaimer. This method may involve hazardous materials, operations, and equipment. This test method may not address all of the safety problems associated with its use. It is the responsibility of the user of this test method to establish appropriate safety and health practices and determine the applicability of regulatory limitations prior to performing this test method.

5.2 Corrosive Reagents. The following reagents are hazardous. Personal protective equipment and safe procedures are useful in preventing chemical splashes. If contact occurs, immediately flush with copious amounts of water at least 15 minutes. Remove clothing under shower and decontaminate. Treat residual chemical burns as thermal burns.

5.2.1 Hydrochloric Acid (HCl). Highly corrosive liquid with toxic vapors. Vapors are highly irritating to eyes, skin, nose, and lungs, causing severe damage. May cause bronchitis, pneumonia, or edema of lungs. Exposure to concentrations of 0.13 to 0.2 percent can be lethal to humans in a few minutes. Provide ventilation to limit exposure. Reacts with metals, producing hydrogen gas.

5.2.2 Hydrofluoric Acid (HF). Highly corrosive to eyes, skin, nose, throat, and lungs. Reaction to exposure may be delayed by 24 hours or more. Provide ventilation to limit exposure.

5.2.3 Nitric Acid (HNO_3). Highly corrosive to eyes, skin, nose, and lungs. Vapors cause bronchitis, pneumonia, or edema of lungs. Reaction to inhalation may be delayed as long as 30 hours and still be fatal. Provide ventilation to limit exposure. Strong oxidizer. Hazardous reaction may occur with organic materials such as solvents.

5.2.4 Perchloric Acid ($HClO_4$). Corrosive to eyes, skin, nose, and throat. Provide ventilation to limit exposure. Keep separate from water and oxidizable materials to prevent vigorous evolution of heat, spontaneous combustion, or explosion. Heat solutions containing $HClO_4$ only in hoods specifically designed for $HClO_4$.

6.0 Equipment and Supplies

6.1 Alpha Spectrometry System. Consisting of a multichannel analyzer, biasing electronics, silicon surface barrier detector, vacuum pump and chamber.

6.2 Constant Temperature Bath at 85 °C (185 °F).

6.3 Polished Silver Discs. 3.8 cm diameter, 0.4 mm thick with a small hole near the edge.

6.4 Glass Beakers. 400 ml, 150 ml.

6.5 Hot Plate, Electric.

6.6 Fume Hood.

6.7 Teflon Beakers, 150 ml.

6.8 Magnetic Stirrer.

6.9 Stirring Bar.

6.10 Hooks. Plastic or glass, to suspend plating discs.

6.11 Internal Proportional Counter. For measuring alpha particles.

6.12 Nucleopore Filter Membranes. 25 mm diameter, 0.2 micrometer pore size or equivalent.

6.13 Planchets. Stainless steel, 32 mm diameter with 1.5 mm lip.

6.14 Transparent Plastic Tape. 2.5 cm wide with adhesive on both sides.

6.15 Epoxy Spray Enamel.

6.16 Suction Filter Apparatus. For 25 mm diameter filter.

6.17 Wash Bottles, 250 ml capacity.

6.18 Graduated Cylinder, plastic, 25 ml capacity.

6.19 Volumetric Flasks, 100 ml, 250 ml.

7.0 Reagents and Standards

Unless otherwise indicated, it is intended that all reagents conform to the specifications established by the Committee on Analytical Reagents of the American Chemical Society, where such specifications are available; otherwise, use the best available grade.

7.1 Ascorbic Acid.

7.2 Ammonium Hydroxide (NH_4OH), 15 M.

7.3 Water. Deionized distilled, to conform to ASTM D 1193–77 or 91 (incorporated by reference—see §61.18), Type 3. Use in all dilutions requiring water.

7.4 Ethanol (C_2H_5OH), 95 percent.

7.5 Hydrochloric Acid, 12 M.

7.6 Hydrochloric Acid, 1 M. Dilute 83 ml of the 12 M HCl to 1 liter with distilled water.

7.7 Hydrofluoric Acid, 29 M.

7.8 Hydrofluoric Acid, 3 M. Dilute 52 ml of the 29 M HF to 500 ml with distilled water. Use a plastic graduated cylinder and storage bottle.

7.9 Lanthanum Carrier, 0.1 mg La^{+3}/ml. Dissolve 0.078 gram lanthanum nitrate, $La(NO_3)_3 \cdot 6H_2O$ in 250 ml of 1 M HCl.

7.10 Nitric Acid, 16 M.

7.11 Perchloric Acid, 12 M.

7.12 Polonium-209 Solution.

7.13 Silver Cleaner. Any mild abrasive commercial silver cleaner.

7.14 Degreaser.

7.15 Standard Solution. Standardized solution of an alpha-emitting actinide element, such as plutonium-239 or americium-241.

8.0 Sample Collection, Preservation, Transport, and Storage. [Reserved]

9.0 Quality Control

9.1 General Requirement.

9.1.1 All analysts using this method are required to demonstrate their ability to use the method and to define their respective accuracy and precision criteria.

9.2 Miscellaneous Quality Control Measures.

Section	Quality control measure	Effect
10.1	Standardization of alpha spectrometry system.	Ensure precision of sample analyses.
10.3	Standardization of internal proportional counter.	Ensure precise sizing of sample aliquot.
11.1, 11.2	Determination of procedure background and instrument background.	Minimize background effects.
11.3	Audit sample analysis	Evaluate analyst's technique.

10.0 Calibration and Standardization

10.1 Standardization of Alpha Spectrometry System.

10.1.1 Add a quantity of the actinide standard solution to a 100 ml volumetric flask so that the final concentration when diluted to a volume of 100 ml will be approximately 1 pCi/ml.

10.1.2 Add 10 ml of 16 M HNO_3 and dilute to 100 ml with water.

10.1.3 Add 20 ml of 1 M HCl to each of six 150 ml beakers. Add 1.0 ml of lanthanum carrier, 0.1 mg lanthanum per ml, to the acid solution in each beaker.

10.1.4 Add 1.0 ml of the 1 pCi/ml working solution (from Section 10.1.1) to each beaker. Add 5.0 ml of 3 M HF to each beaker.

10.1.5 Cover beakers and allow solutions to stand for a minimum of 30 minutes. Filter the contents of each beaker through a separate filter membrane using the suction filter apparatus. After each filtration, wash the filter membrane with 10 ml of distilled water and 5 ml of ethanol, and allow the filter membrane to air dry on the filter apparatus.

10.1.6 Carefully remove the filter membrane and mount it, filtration side up, with double-side tape on the inner surface of a planchet. Place planchet in an alpha spectrometry system and count each planchet for 1000 minutes.

10.1.7 Calculate the counting efficiency of the detector for each aliquot of the 1 pCi/ml actinide working solution using Eq. 111–1 in Section 12.2.

10.1.8 Determine the average counting efficiency of the detector, E_c, by calculating the average of the six determinations.

10.2 Preparation of Standardized Solution of Polonium-209.

10.2.1 Add a quantity of the Po-209 solution to a 100 ml volumetric flask so that the final concentration when diluted to a 100 ml volume will be approximately 1 pCi/ml.

10.2.2 Follow the procedures outlined in Sections 10.1.2 through 10.1.6, except substitute 1.0 ml of polonium-209 tracer solution (Section 10.2.1) and 3.0 ml of 15 M ammonium hydroxide for the 1 pCi/ml actinide working solution and the 3 M HF, respectively.

10.2.3 Calculate the activity of each aliquot of the polonium-209 tracer solution using Eq. 111–2 in Section 12.3.

10.2.4 Determine the average activity of the polonium-209 tracer solution, F, by averaging the results of the six determinations.

10.3 Standardization of Internal Proportional Counter

10.3.1 Add a quantity of the actinide standard solution to a 100 ml volumetric flask so that the final concentration when diluted to a 100 ml volume will be approximately 100 pCi/ml.

10.3.2 Follow the procedures outlined in Sections 10.1.2 through 10.1.6, except substitute the 100 pCi/ml actinide working solution for the 1 pCi/ml solution, place the planchet in an internal proportional counter (instead of an alpha spectrometry system), and count for 100 minutes (instead of 1000 minutes).

10.3.3 Calculate the counting efficiency of the internal proportional counter for each aliquot of the 100 pCi/ml actinide working solution using Eq. 111–3 in 12.4.

10.3.4 Determine the average counting efficiency of the internal proportional counter, E_I, by averaging the results of the six determinations.

11.0 Analytical Procedure

NOTE: Perform duplicate analyses of all samples, including background counts, quality assurance audit samples, and Method 5 samples. Duplicate measurements are considered acceptable when the difference between them is less than two standard deviations as described in EPA 600/4–77–001 or subsequent revisions.

11.1 Determination of Procedure Background. Background counts used in all equations are determined by performing the specific analysis required using the analytical reagents only. All procedure background counts and sample counts for the internal

proportional counter should utilize a counting time of 100 minutes; for the alpha spectrometry system, 1000 minutes. These background counts should be performed no less frequently than once per 10 sample analyses.

11.2 Determination of Instrument Background. Instrument backgrounds of the internal proportional counter and the alpha spectrometry system should be determined on a weekly basis. Instrument background should not exceed procedure background. If this occurs, it may be due to a malfunction or contamination, and should be corrected before use.

11.3 Quality Assurance Audit Samples. An externally prepared performance evaluation sample shall be analyzed no less frequently than once per 10 sample analyses, and the results reported with the test results.

11.4 Sample Preparation. Treat the Method 5 samples [*i.e.*, the glass fiber filter (Container No. 1) and the acetone rinse (Container No. 2)] as follows:

11.4.1 Container No. 1. Transfer the filter and any loose particulate matter from the sample container to a 150-ml Teflon beaker.

11.4.2 Container No. 2. Note the level of liquid in the container, and confirm on the analysis sheet whether leakage occurred during transport. If a noticeable amount of leakage has occurred, either void the sample or use methods, subject to the approval of the Administrator, to correct the final results. Transfer the contents to a 400-ml glass beaker. Add polonium-209 tracer solution to the glass beaker in an amount approximately equal to the amount of polonium-210 expected in the total particulate sample. Record the activity of the tracer solution added. Add 16 M nitric acid to the beaker to digest and loosen the residue.

11.4.3 Transfer the contents of the glass beaker to the Teflon beaker containing the glass fiber filter. Rinse the glass beaker with 16 M HNO_3. If necessary, reduce the volume in the beaker by evaporation until all of the nitric acid HNO_3 from the glass beaker has been transferred to the Teflon beaker.

11.4.4 Add 30 ml of 29 M HF to the Teflon beaker and evaporate to near dryness on a hot plate in a properly operating hood.

NOTE: Do not allow the residue to go to dryness and overheat; this will result in loss of polonium.

11.4.5 Repeat step 11.4.4 until the filter is dissolved.

11.4.6 Add 100 ml of 16 M HNO_3 to the residue in the Teflon beaker and evaporate to near dryness.

NOTE: Do not allow the residue to go to dryness.

11.4.7 Add 50 ml of 16 M HNO_3 and 10 ml of 12 M perchloric acid to the Teflon beaker and heat until dense fumes of perchloric acid are evolved.

11.4.8 Repeat steps 11.4.4 to 11.4.7 as necessary until sample is completely dissolved.

11.4.9 Add 10 ml of 12 M HCl to the Teflon beaker and evaporate to dryness. Repeat additions and evaporations several times.

11.4.10 Transfer the sample to a 250-ml volumetric flask and dilute to volume with 3 M HCl.

11.5 Sample Screening. To avoid contamination of the alpha spectrometry system, check each sample as follows:

11.5.1 Add 20 ml of 1 M HCl, 1 ml of the lanthanum carrier solution (0.1 mg La/ml), a 1 ml aliquot of the sample solution from Section 11.4.10, and 3 ml of 15 M ammonium hydroxide to a 250-ml beaker in the order listed. Allow this solution to stand for a minimum of 30 minutes.

11.5.2 Filter the solution through a filter membrane using the suction filter apparatus. Wash the filter membrane with 10 ml of water and 5 ml of ethanol, and allow the filter membrane to air dry on the filter apparatus.

11.5.3 Carefully remove the filter membrane and mount it, filtration side up, with double-side tape on the inner surface of a planchet. Place the planchet in an internal proportional counter, and count for 100 minutes.

11.5.4 Calculate the activity of the sample using Eq. 111–4 in Section 12.5.

11.5.5 Determine the aliquot volume of the sample solution from Section 11.4.10 to be analyzed for polonium-210, such that the aliquot contains an activity between 1 and 4 picocuries. Use Eq. 111–5 in Section 12.6.

11.6 Preparation of Silver Disc for Spontaneous Electrodeposition.

11.6.1 Clean both sides of the polished silver disc with silver cleaner and with degreaser.

11.6.2 Place disc on absorbent paper and spray one side with epoxy spray enamel. This should be carried out in a well-ventilated area, with the disc lying flat to keep paint on one side only. Allow paint to dry for 24 hours before using disc for deposition.

11.7 Sample Analysis.

11.7.1 Add the aliquot of sample solution from Section 11.4.10 to be analyzed for polonium-210, the volume of which was determined in Section 11.5.5, to a suitable 200-ml container to be placed in a constant temperature bath.

NOTE: Aliquot volume may require a larger container.

11.7.2 If necessary, bring the volume to 100 ml with 1 M HCl. If the aliquot volume exceeds 100 ml, use total aliquot.

11.7.3 Add 200 mg of ascorbic acid and heat solution to 85 °C (185 °F) in a constant temperature bath.

11.7.4 Suspend a silver disc in the heated solution using a glass or plastic rod with a hook inserted through the hole in the disc.

The disc should be totally immersed in the solution, and the solution must be stirred constantly, at all times during the plating operation. Maintain the disc in solution for 3 hours.

11.7.5 Remove the silver disc, rinse with deionized distilled water, and allow to air dry at room temperature.

11.7.6 Place the disc, with deposition side (unpainted side) up, on a planchet and secure with double-side plastic tape. Place the planchet with disc in alpha spectrometry system and count for 1000 minutes.

12.0 Data Analysis and Calculations.

12.1 Nomenclature.

A = Picocuries of polonium-210 in the Method 5 sample (from Section 12.8).

A_A = Picocuries of actinide added.

A_L = Volume of sample aliquot used, in ml (specified in Section 11.5.1 as 1 ml).

A_S = Aliquot to be analyzed, in ml.

B_B = Procedure background counts measured in polonium-209 spectral region.

B_T = Polonium-209 tracer counts in sample.

C_T = Total counts in polonium-210 spectral region.

D = Decay correction for time ''t'' (in days) from sample collection to sample counting, given by: $D=e^{-0.005t}$

E_C = Average counting efficiency of detector (from Section 10.1.8), as counts per disintegration.

E_{Ci} = Counting efficiency of the detector for aliquot i of the actinide working solution, counts per disintegration.

E_I = Average counting efficiency of the internal proportional counter, as determined in Section 10.3.4, counts per disintegration.

E_{Ii} = Counting efficiency of the internal proportional counter for aliquot i of the 100 pCi/ml actinide working solution, counts per disintegration.

E_Y = The fraction of polonium-209 recovered on the planchet (from Section 12.7).

F= Average activity of polonium-209 in sample (from Section 10.2.4), in pCi.

F_i = activity of aliquot i of the polonium-209 tracer solution, in pCi.

L = Dilution factor (unitless). This is the volume of sample solution prepared (specified as 250 ml in Section 11.1.10) divided by the volume of the aliquot of sample solution analyzed for polonium-210 (from Section 11.7.1).

M_i = Phosphorous rock processing rate of the source being tested, during run i, Mg/hr.

M_k = Phosphate rock processed annually by source k, in Mg/yr.

n = Number of calciners at the elemental phosphorus plant.

P = Total activity of sample solution from Section 11.4.10, in pCi (see Eq. 111–4).

Q_{sd} = Volumetric flow rate of effluent stream, as determined by Method 2, in dscm/hr.

S = Annual polonium-210 emissions from the entire facility, in curies/yr.

$V_{m(std)}$ = Volume of air sample, as determined by Method 5, in dscm.

X_k = Emission rate from source k, from Section 12.10, in curies/Mg.

10^{-12} = Curies per picocurie.

2.22 = Disintegrations per minute per picocurie.

250 = Volume of solution from Section 11.4.10, in ml.

12.2 Counting Efficiency. Calculate the counting efficiency of the detector for each aliquot of the 1 pCi/ml actinide working solution using Eq. 111–1.

$$E_{Ci} = \frac{C_S - C_B}{2.22\ A_A T} \qquad \text{Eq. 111-1}$$

Where:

C_B = Background counts in same peak area as C_S.

C_S = Gross counts in actinide peak.

T = Counting time in minutes, specified in Section 10.1.6 as 1000 minutes.

12.3 Polonium-209 Tracer Solution Activity. Calculate the activity of each aliquot of the polonium-209 tracer solution using Eq. 111–2.

$$F_i = \frac{C_S - C_B}{2.22\ E_{Ci} T} \qquad \text{Eq. 111-2}$$

Where:

C_B = Background counts in the 4.88 MeV region of spectrum the in the counting time T.

C_S = Gross counts of polonium-209 in the 4.88 MeV region of the spectrum in the counting time T.

T = Counting time, specified in Section 10.1.6 as 1000 minutes.

12.4 Control Efficiency of Internal Proportional Counter. Calculate the counting efficiency of the internal proportional counter for each aliquot of the 100 pCi/ml actinide working solution using Eq. 111–3.

$$E_{Ii} = \frac{C_S - C_B}{2.22\ A_A T} \qquad \text{Eq. 111-3}$$

Where:

C_B = Gross counts of procedure background.

C_S = Gross counts of standard.

T = Counting time in minutes, specified in Section 10.3.2 as 100 minutes.

12.5 Calculate the activity of the sample using Eq. 111–4.

$$P = \frac{250\ (C_S - C_B)}{2.22\ \overline{E_I} A_L T} \qquad \text{Eq. 111-4}$$

Where:

C_B = Total counts of procedure background. (See Section 11.1).

C_S = Total counts of screening sample.

T = Counting time for sample and background (which must be equal), in minutes (specified in Section 11.5.3 as 100 minutes).

12.6 Aliquot Volume. Determine the aliquot volume of the sample solution from Section 11.4.10 to be analyzed for polonium-210 , such that the aliquot contains an activity between 1 and 4 picocuries using Eq. 111–5.

$$A_s = \frac{250\ \text{(desired picocuries in aliquot)}}{P} \qquad \text{Eq. 111-5}$$

12.7 Polonium-209 Recovery. Calculate the fraction of polonium-209 recovered on the planchet, E_Y, using Eq. 111–6.

$$E_Y = \frac{B_T - B_B}{2.22\ \overline{F}\ \overline{E_C}\ T} \qquad \text{Eq. 111-6}$$

Where:

T = Counting time, specified in Section 11.1 as 1000 minutes.

12.8 Polonium-210 Activity. Calculate the activity of polonium-210 in the Method 5 sample (including glass fiber filter and acetone rinse) using Eq. 111–7.

$$A = \frac{(C_T - C_B)\,L}{2.22\,E_y\,\overline{E_C}\,T\,D} \qquad \text{Eq. 111-7}$$

Where:

C_B = Procedure background counts in polonium-210 spectral region.

T = Counting time, specified in Section 11.1 as 1000 minutes for all alpha spectrometry sample and background counts.

12.9 Emission Rate from Each Stack.

12.9.1 For each test run, i, on a stack, calculate the measured polonium-210 emission rate, R_{Si}, using Eq. 111–8.

$$R_{Si} = \frac{(10^{-12})\,A\,Q_{sd}}{V_{m(std)}M_i} \qquad \text{Eq. 111-8}$$

12.9.2 Determine the average polonium-210 emission rate from the stack, R_S, by taking the sum of the measured emission rates for all runs, and dividing by the number of runs performed.

12.9.3 Repeat steps 12.9.1 and 12.9.2 for each stack of each calciner.

12.10 Emission Rate from Each Source. Determine the total polonium-210 emission rate, X_k, from each source, k, by taking the sum of the average emission rates from all stacks to which the source exhausts.

12.11 Annual Polonium-210 Emission Rate from Entire Facility. Determine the annual elemental phosphorus plant emissions of polonium-210, S, using Eq. 111–9.

$$S = \frac{\sum_{k=1}^{n}(X_k M_k)}{n} \qquad \text{Eq. 111-9}$$

13.0 Method Performance. [Reserved]

14.0 Pollution Prevention. [Reserved]

15.0 Waste Management. [Reserved]

16.0 References

1. Blanchard, R.L. ''Rapid Determination of Lead-210 and Polonium-210 in Environmental Samples by Deposition on Nickel.'' Anal. Chem., *38*:189, pp. 189–192. February 1966.

17.0 Tables, Diagrams, Flowcharts, and Validation Data [Reserved]

METHOD 114—TEST METHODS FOR MEASURING RADIONUCLIDE EMISSIONS FROM STATIONARY SOURCES

1. *Purpose and Background*

This method provides the requirements for: (1) Stack monitoring and sample collection methods appropriate for radionuclides; (2) radiochemical methods which are used in determining the amounts of radionuclides collected by the stack sampling and; (3) quality assurance methods which are conducted in conjunction with these measurements. These methods are appropriate for emissions for stationary sources. A list of references is provided.

Many different types of facilities release radionuclides into air. These radionuclides differ in the chemical and physical forms, half-lives and type of radiation emitted. The appropriate combination of sample extraction, collection and analysis for an individual radionuclide is dependent upon many interrelated factors including the mixture of other radionuclides present. Because of this wide range of conditions, no single method for monitoring or sample collection and analysis of a radionuclide is applicable to all types of facilities. Therefore, a series of methods based on ''principles of measurement'' are described for monitoring and sample collection and analysis which are applicable to the measurement of radionuclides

found in effluent streams at stationary sources. This approach provides the user with the flexibility to choose the most appropriate combination of monitoring and sample collection and analysis methods which are applicable to the effluent stream to be measured.

2. *Stack Monitoring and Sample Collection Methods*

Monitoring and sample collection methods are described based on ''principles of monitoring and sample collection'' which are applicable to the measurement of radionuclides from effluent streams at stationary sources. Radionuclides of most elements will be in the particulate form in these effluent streams and can be readily collected using a suitable filter media. Radionuclides of hydrogen, oxygen, carbon, nitrogen, the noble gases and in some circumstances iodine will be in the gaseous form. Radionuclides of these elements will require either the use of an in-line or off-line monitor to directly measure the radionuclides, or suitable sorbers, condensers or bubblers to collect the radionuclides.

2.1 Radionuclides as Particulates. The extracted effluent stream is passed through a filter media to remove the particulates. The filter must have a high efficiency for removal of sub-micron particles. The guidance in ANSI/HPS N13.1–1999 (section 6.6.2 Filter media) shall be followed in using filter media to collect particulates (incorporated by reference—see §61.18 of this part).

2.2 Radionuclides as Gases.

2.2.1 The Radionuclide Tritium (H–3). Tritium in the form of water vapor is collected from the extracted effluent sample by sorption, condensation or dissolution techniques. Appropriate collectors may include silica gel, molecular sieves, and ethylene glycol or water bubblers.

Tritium in the gaseous form may be measured directly in the sample stream using Method B–1, collected as a gas sample or may be oxidized using a metal catalyst to tritiated water and collected as described above.

2.2.2 Radionuclides of Iodine. Iodine is collected from an extracted sample by sorption or dissolution techniques. Appropriate collectors may include charcoal, impregnated charcoal, metal zeolite and caustic solutions.

2.2.3 Radionuclides of Argon, Krypton and Xenon. Radionuclides of these elements are either measured directly by an in-line or off-line monitor, or are collected from the extracted sample by low temperature sorption techniques, Appropriate sorbers may include charcoal or metal zeolite.

2.2.4 Radionuclides of Oxygen, Carbon, Nitrogen and Radon. Radionuclides of these elements are measured directly using an in-line or off-line monitor. Radionuclides of carbon in the form of carbon dioxide may be collected by dissolution in caustic solutions.

2.3 Definition of Terms

In-line monitor means a continuous measurement system in which the detector is placed directly in or adjacent to the effluent stream. This may involve either gross radioactivity measurements or specific radionuclide measurements. Gross measurements shall be made in conformance with the conditions specified in Methods A–4, B–2 and G–4.

Off-line monitor means a measurement system in which the detector is used to continuously measure an extracted sample of the effluent stream. This may involve either gross radioactivity measurements or specific radionuclide measurements. Gross measurements shall be made in conformance with the conditions specified in Methods A–4, B–2 and G–4.

Sample collection means a procedure in which the radionuclides are removed from an extracted sample of the effluent using a collection media. These collection media include filters, absorbers, bubblers and condensers. The collected sample is analyzed using the methods described in Section 3.

3. *Radionuclide Analysis Methods*

A series of methods based on ''principles of measurement'' are described which are applicable to the analysis of radionuclides collected from airborne effluent streams at stationary sources. These methods are applicable only under the conditions stated and within the limitations described. Some methods specify that only a single radionuclide be present in the sample or the chemically separated sample. This condition should be interpreted to mean that no other radionuclides are present in quantities which would interfere with the measurement.

Also identified (Table 1) are methods for a selected list of radionuclides. The listed radionuclides are those which are most commonly used and which have the greatest potential for causing dose to members of the public. Use of methods based on principles of measurement other than those described in this section must be approved in advance of use by the Administrator. For radionuclides not listed in Table 1, any of the described methods may be used provided the user can demonstrate that the applicability conditions of the method have been met.

The type of method applicable to the analysis of a radionuclide is dependent upon the type of radiation emitted, i.e., alpha, beta or gamma. Therefore, the methods described below are grouped according to principles of measurements for the analysis of alpha, beta and gamma emitting radionuclides.

3.1 Methods for Alpha Emitting Radionuclides

3.1.1 Method A–1, Radiochemistry-Alpha Spectrometry.

Principle: The element of interest is separated from other elements, and from the sample matrix using radiochemical techniques. The procedure may involve precipitation, ion exchange, or solvent extraction. Carriers (elements chemically similar to the element of interest) may be used. The element is deposited on a planchet in a very thin film by electrodeposition or by co-precipitation on a very small amount of carrier, such as lanthanum fluoride. The deposited element is then counted with an alpha spectrometer. The activity of the nuclide of interest is measured by the number of alpha counts in the appropriate energy region. A correction for chemical yield and counting efficiency is made using a standardized radioactive nuclide (tracer) of the same element. If a radioactive tracer is not available for the element of interest, a predetermined chemical yield factor may be used.

Applicability: This method is applicable for determining the activity of any alpha-emitting radionuclide, regardless of what other radionuclides are present in the sample provided the chemical separation step produces a very thin sample and removes all other radionuclides which could interfere in the spectral region of interest. APHA–605(2), ASTM–D–3972(13).

3.1.2 Method A–2, Radiochemistry-Alpha Counting.

Principle: The element of interest is separated from other elements, and from the sample matrix using radiochemistry. The procedure may involve precipitation, ion exchange, or solvent extraction. Carriers (elements chemically similar to the element of interest) may be used. The element is deposited on a planchet in a thin film and counted with a alpha counter. A correction for chemical yield (if necessary) is made. The alpha count rate measures the total activity of all emitting radionuclides of the separated element.

Applicability: This method is applicable for the measurement of any alpha-emitting radionuclide, provided no other alpha emitting radionuclide is present in the separated sample. It may also be applicable for determining compliance, when other radionuclides of the separated element are present, provided that the calculated emission rate is assigned to the radionuclide which could be present in the sample that has the highest dose conversion factor. IDO–12096(18).

3.1.3 Method A–3, Direct Alpha Spectrometry.

Principle: The sample, collected on a suitable filter, is counted directly on an alpha spectrometer. The sample must be thin enough and collected on the surface of the filter so that any absorption of alpha particle energy in the sample or the filter, which would degrade the spectrum, is minimal.

Applicability: This method is applicable to simple mixtures of alpha emitting radionuclides and only when the amount of particulates collected on the filter paper are relatively small and the alpha spectra is adequately resolved. Resolutions should be 50 keV (FWHM) or better, ASTM–D–3084(16).

3.1.4 Method A–4, Direct Alpha Counting (Gross alpha determination).

Principle: The sample, collected on a suitable filter, is counted with an alpha counter. The sample must be thin enough so that self-absorption is not significant and the filter must be of such a nature that the particles are retained on the surface.

Applicability: Gross alpha determinations may be used to measure emissions of specific radionuclides only (1) when it is known that the sample contains only a single radionuclide, or the identity and isotopic ratio of the radionuclides in the sample are well-known, and (2) measurements using either Method A–1, A–2 or A–5 have shown that this method provides a reasonably accurate measurement of the emission rate. Gross alpha measurements are applicable to unidentified mixtures of radionuclides only for the purposes and under the conditions described in section 3.7. APHA–601(3), ASTM–D–1943(10).

3.1.5 Method A–5, Chemical Determination of Uranium.

Principle: Uranium may be measured chemically by either colorimetry or fluorometry. In both procedures, the sample is dissolved, the uranium is oxidized to the hexavalent form and extracted into a suitable solvent. Impurities are removed from the solvent layer. For colorimetry, dibenzoylmethane is added, and the uranium is measured by the absorbance in a colorimeter. For fluorometry, a portion of the solution is fused with a sodium fluoride-lithium fluoride flux and the uranium is determined by the ultraviolet activated fluorescence of the fused disk in a fluorometer.

Applicability: This method is applicable to the measurements of emission rates of uranium when the isotopic ratio of the uranium radionuclides is well known. ASTM–E–318(15), ASTM–D–2907(14).

3.1.6 Method A–6, Radon-222—Continuous Gas Monitor.

Principle: Radon-222 is measured directly in a continuously extracted sample stream by passing the air stream through a calibrated scintillation cell. Prior to the scintillation cell, the air stream is treated to remove particulates and excess moisture. The alpha particles from radon-222 and its decay products strike a zinc sulfide coating on the inside of the scintillation cell producing light pulses. The light pulses are detected by a photomultiplier tube which generates electrical pulses. These pulses are processed by the system electronics and the read out is in pCi/l of radon-222.

Applicability: This method is applicable to the measurement of radon-222 in effluent streams which do not contain significant quantities of radon-220. Users of this method should calibrate the monitor in a radon calibration chamber at least twice per year. The background of the monitor should also be checked periodically by operating the instrument in a low radon environment. EPA 520/1–89–009(24).

3.1.7 Method A–7, Radon-222-Alpha Track Detectors

Principle: Radon-222 is measured directly in the effluent stream using alpha track detectors (ATD). The alpha particles emitted by radon-222 and its decay products strike a small plastic strip and produce submicron damage tracks. The plastic strip is placed in a caustic solution that accentuates the damage tracks which are counted using a microscope or automatic counting system. The number of tracks per unit area is correlated to the radon concentration in air using a conversion factor derived from data generated in a radon calibration facility.

Applicability: Prior approval from EPA is required for use of this method. This method is only applicable to effluent streams which do not contain significant quantities of radon-220, unless special detectors are used to discriminate against radon-220. This method may be used only when ATDs have been demonstrated to produce data comparable to data obtained with Method A–6. Such data should be submitted to EPA when requesting approval for the use of this method. EPA 520/1–89–009(24).

3.2 Methods for Gaseous Beta Emitting Radionuclides.

3.2.1 Method B–1, Direct Counting in Flow-Through Ionization Chambers.

Principle: An ionization chamber containing a specific volume of gas which flows at a given flow rate through the chamber is used. The sample (effluent stream sample) acts as the counting gas for the chamber. The activity of the radionuclide is determined from the current measured in the ionization chamber.

Applicability: This method is applicable for measuring the activity of a gaseous beta-emitting radionuclide in an effluent stream that is suitable as a counting gas, when no other beta-emitting nuclides are present. DOE/EP–0096(17), NCRP–58(23).

3.2.2 Method B–2, Direct Counting With In-line or Off-line Beta Detectors.

Principle: The beta detector is placed directly in the effluent stream (in-line) or an extracted sample of the effluent stream is passed through a chamber containing a beta detector (off-line). The activities of the radionuclides present in the effluent stream are determined from the beta count rate, and a knowledge of the radionuclides present and the relationship of the gross beta count rate and the specific radionuclide concentration.

Applicability: This method is applicable only to radionuclides with maximum beta particle energies greater then 0.2 MeV. This method may be used to measure emissions of specific radionuclides only when it is known that the sample contains only a single radionuclide or the identity and isotopic ratio of the radionuclides in the effluent stream are well known. Specific radionuclide analysis of periodic grab samples may be used to identify the types and quantities of radionuclides present and to establish the relationship between specific radionuclide analyses and gross beta count rates.

This method is applicable to unidentified mixtures of gaseous radionuclides only for the purposes and under the conditions described in section 3.7.

3.3 Methods for Non-Gaseous Beta Emitting Radionuclides.

3.3.1 Method B–3, Radiochemistry-Beta Counting.

Principle: The element of interest is separated from other elements, and from the sample matrix by radiochemistry. This may involve precipitation, distillation, ion exchange, or solvent extraction. Carriers (elements chemically similar to the element of interest) may be used. The element is deposited on a planchet, and counted with a beta counter. Corrections for chemical yield, and decay (if necessary) are made. The beta count rate determines the total activity of all radionuclides of the separated element. This method may also involve the radiochemical separation and counting of a daughter element, after a suitable period of ingrowth, in which case it is specific for the parent nuclide.

Applicability: This method is applicable for measuring the activity of any beta-emitting radionuclide, with a maximum energy greater than 0.2 MeV, provided no other radionuclide is present in the separated sample. APHA–608(5).

3.3.2 Method B–4, Direct Beta Counting (Gross beta determination).

Principle: The sample, collected on a suitable filter, is counted with a beta counter. The sample must be thin enough so that self-absorption corrections can be made.

Applicability: Gross beta measurements are applicable only to radionuclides with maximum beta particle energies greater than 0.2 MeV. Gross beta measurements may be used to measure emissions of specific radionuclides only (1) when it is known that the sample contains only a single radionuclide, and (2) measurements made using Method B–3 show reasonable agreement with the gross beta measurement. Gross beta measurements are applicable to mixtures of radionuclides only for the purposes and under the conditions described in section 3.7. APHA–602(4), ASTM–D–1890(11).

3.3.3 Method B–5, Liquid Scintillation Spectrometry.

Principle: An aliquot of a collected sample or the result of some other chemical separation or processing technique is added to a liquid scintillation ''cocktail'' which is viewed by photomultiplier tubes in a liquid scintillation spectrometer. The spectrometer is adjusted to establish a channel or ''window'' for the pulse energy appropriate to the nuclide of interest. The activity of the nuclide of interest is measured by the counting rate in the appropriate energy channel. Corrections are made for chemical yield where separations are made.

Applicability: This method is applicable to any beta-emitting nuclide when no other radionuclide is present in the sample or the separated sample provided that it can be incorporated in the scintillation cocktail. This method is also applicable for samples which contain more than one radionuclide but only when the energies of the beta particles are sufficiently separated so that they can be resolved by the spectrometer. This method is most applicable to the measurement of low-energy beta emitters such as tritium and carbon-14. APHA–609(6), EML–LV–539–17(19).

3.4 Gamma Emitting Radionuclides

3.4.1 Method G–1, High Resolution Gamma Spectrometry.

Principle: The sample is counted with a high resolution gamma detector, usually either a Ge(Li) or a high purity Ge detector, connected to a multichannel analyzer or computer. The gamma emitting radionuclides in the sample are measured from the gamma count rates in the energy regions characteristic of the individual radionuclide. Corrections are made for counts contributed by other radionuclides to the spectral regions of the radionuclides of interest. Radiochemical separations may be made prior to counting but are usually not necessary.

Applicability: This method is applicable to the measurement of any gamma emitting radionuclide with gamma energies greater than 20 keV. It can be applied to complex mixtures of radionuclides. The samples counted may be in the form of particulate filters, absorbers, liquids or gases. The method may also be applied to the analysis of gaseous gamma emitting radionuclides directly in an effluent stream by passing the stream through a chamber or cell containing the detector. ASTM–3649(9), IDO–12096(18).

3.4.2 Method G–2, Low Resolution Gamma Spectrometry.

Principle: The sample is counted with a low resolution gamma detector, a thallium activated sodium iodide crystal. The detector is coupled to a photomultiplier tube and connected to a multichannel analyzer. The gamma emitting radionuclides in the sample are measured from the gamma count rates in the energy regions characteristic of the individual radionuclides. Corrections are made for counts contributed by other radionuclides to the spectral regions of the radionuclides of interest. Radiochemical separation may be used prior to counting to obtain less complex gamma spectra if needed.

Applicability: This method is applicable to the measurement of gamma emitting radionuclides with energies greater than 100 keV. It can be applied only to relatively simple mixtures of gamma emitting radionuclides. The samples counted may be in the form of particulate filters, absorbers, liquids or gas. The method can be applied to the analysis of gaseous radionuclides directly in an effluent stream by passing the gas stream through a chamber or cell containing the detector. ASTM–D–2459(12), EMSL–LV–0539–17(19).

3.4.3 Method G–3, Single Channel Gamma Spectrometry.

Principle: The sample is counted with a thallium activated sodium iodide crystal. The detector is coupled to a photomultiplier tube connected to a single channel analyzer. The activity of a gamma emitting radionuclide is determined from the gamma counts in the energy range for which the counter is set.

Applicability: This method is applicable to the measurement of a single gamma emitting radionuclide. It is not applicable to mixtures of radionuclides. The samples counted may be in the form of particulate filters, absorbers, liquids or gas. The method can be applied to the analysis of gaseous radionuclides directly in an effluent stream by passing the gas stream through a chamber or cell containing the detector.

3.4.4 Method G–4, Gross Gamma Counting.

Principle: The sample is counted with a gamma detector usually a thallium activated sodium iodine crystal. The detector is coupled to a photomultiplier tube and gamma rays above a specific threshold energy level are counted.

Applicability: Gross gamma measurements may be used to measure emissions of specific radionuclides only when it is known that the sample contains a single radionuclide or the identity and isotopic ratio of the radionuclides in the effluent stream are well known. When gross gamma measurements are used to determine emissions of specific radionuclides periodic measurements using Methods G–1 or G–2 should be made to demonstrate that the gross gamma measurements provide reliable emission data. This method may be applied to analysis of gaseous radionuclides directly in an effluent stream by placing the detector directly in or adjacent to the effluent stream or passing an extracted sample of the effluent stream through a chamber or cell containing the detector.

3.5 Counting Methods. All of the above methods with the exception of Method A–5 involve counting the radiation emitted by the radionuclide. Counting methods applicable to the measurement of alpha, beta and

gamma radiations are listed below. The equipment needed and the counting principles involved are described in detail in ASTM–3648(8).

3.5.1 Alpha Counting:

• *Gas Flow Proportional Counters.* The alpha particles cause ionization in the counting gas and the resulting electrical pulses are counted. These counters may be windowless or have very thin windows.

• *Scintillation Counters.* The alpha particles transfer energy to a scintillator resulting in a production of light photons which strike a photomultiplier tube converting the light photons to electrical pulses which are counted. The counters may involve the use of solid scintillation materials such as zinc sulfide or liquid scintillation solutions.

• *Solid-State Counters.* Semiconductor materials, such as silicon surface-barrier p-n junctions, act as solid ionization chambers. The alpha particles interact which the detector producing electron hole pairs. The charged pair is collected by an applied electrical field and the resulting electrical pulses are counted.

• *Alpha Spectrometers.* Semiconductor detectors used in conjunction with multichannel analyzers for energy discrimination.

3.5.2 Beta Counting:

• *Ionization Chambers.* These chambers contain the beta-emitting nuclide in gaseous form. The ionization current produced is measured.

• *Geiger-Muller (GM) Counters-or Gas Flow Proportional Counters.* The beta particles cause ionization in the counting gas and the resulting electrical pulses are counted. Proportional gas flow counters which are heavily shielded by lead or other metal, and provided with an anti-coincidence shield to reject cosmic rays, are called low background beta counters.

• *Scintillation Counters.* The beta particles transfer energy to a scintillator resulting in a production of light photons, which strike a photomultiplier tube converting the light photon to electrical pulses which are counted. This may involve the use of anthracene crystals, plastic scintillator, or liquid scintillation solutions with organic phosphors.

• *Liquid Scintillation Spectrometers.* Liquid scintillation counters which use two photomultiplier tubes in coincidence to reduce background counts. This counter may also electronically discriminate among pulses of a given range of energy.

3.5.3 Gamma Counting:

• *Low-Resolution Gamma Spectrometers.* The gamma rays interact with thallium activated sodium iodide or cesium iodide crystal resulting in the release of light photons which strike a photomultiplier tube converting the light pulses to electrical pulses proportional to the energy of the gamma ray. Multi-channel analyzers are used to separate and store the pulses according to the energy absorbed in the crystal.

• *High-Resolution gamma Spectrometers.* Gamma rays interact with a lithium-drifted (Ge(Li)) or high-purity germanium (HPGe) semiconductor detectors resulting in a production of electron-hole pairs. The charged pair is collected by an applied electrical field. A very stable low noise preamplifier amplifies the pulses of electrical charge resulting from the gamma photon interactions. Multichannel analyzers or computers are used to separate and store the pulses according to the energy absorbed in the crystal.

• *Single Channel Analyzers.* Thallium activated sodium iodide crystals used with a single window analyzer. Pulses from the photomultiplier tubes are separated in a single predetermined energy range.

3.5.4 Calibration of Counters. Counters are calibrated for specific radionuclide measurements using a standard of the radionuclide under either identical or very similar conditions as the sample to be counted. For gamma spectrometers a series of standards covering the energy range of interest may be used to construct a calibration curve relating gamma energy to counting efficiency.

In those cases where a standard is not available for a radionuclide, counters may be calibrated using a standard with energy characteristics as similar as possible to the radionuclide to be measured. For gross alpha and beta measurements of the unidentified mixtures of radionuclides, alpha counters are calibrated with a natural uranium standard and beta counters with a cesium-137 standard. The standard must contain the same weight and distribution of solids as the samples, and be mounted in an identical manner. If the samples contain variable amounts of solids, calibration curves relating weight of solids present to counting efficiency are prepared. Standards other than those prescribed may be used provided it can be shown that such standards are more applicable to the radionuclide mixture measured.

3.6 Radiochemical Methods for Selected Radionuclides. Methods for a selected list of radionuclides are listed in Table 1. The radionuclides listed are those which are most commonly used and which have the greatest potential for causing doses to members of the public. For radionuclides not listed in Table 1, methods based on any of the applicable ''principles of measurement'' described in section 3.1 through 3.4 may be used.

3.7 Applicability of Gross Alpha and Beta Measurements to Unidentified Mixtures of Radionuclides. Gross alpha and beta measurements may be used as a screening measurement as a part of an emission measurement program to identify the need to do specific radionuclide analyses or to confirm or verify that unexpected radionuclides are not being released in significant quantities.

Gross alpha (Method A–4) or gross beta (Methods B–2 or B–4) measurements may also be used for the purpose of comparing the measured concentrations in the effluent stream with the limiting ''Concentration Levels for Environmental Compliance'' in table 2 of appendix E. For unidentified mixtures, the measured concentration value shall be compared with the lowest environmental concentration limit for any radionuclide which is not known to be absent from the effluent stream.

TABLE 1—LIST OF APPROVED METHODS FOR SPECIFIC RADIONUCLIDES

Radionuclide	Approved methods of analysis
Am-241	A–1, A–2, A–3, A–4
Ar-41	B–1, B–2, G–1, G–2, G–3, G–4
Ba-140	G–1, G–2, G–3, G–4
Br-82	G–1, G–2, G–3, G–4
C-11	B–1, B–2, G–1, G–2, G–3, G–4
C-14	B–5
Ca-45	B–3, B–4, B–5
Ce-144	G–1, G–2, G–3, G–4
Cm-244	A–1, A–2, A–3, A–4
Co-60	G–1, G–2, G–3, G–4
Cr-51	G–1, G–2, G–3, G–4
Cs-134	G–1, G–2, G–3, G–4
Cs-137	G–1, G–2, G–3, G–4
Fe-55	B–5, G–1
Fe-59	G–1, G–2, G–3, G–4
Ga-67	G–1, G–2, G–3, G–4
H-3 (H_2O)	B–5
H-3 (gas)	B–1
I-123	G–1, G–2, G–3, G–4
I-125	G–1
I-131	G–1, G–2, G–3, G–4
In-113m	G–1, G–2, G–3, G–4
Ir-192	G–1, G–2, G–3, G–4
Kr-85	B–1, B–2, B–5, G–1, G–2, G–3, G–4
Kr-87	B–1, B–2, G–1, G–2, G–3, G–4
Kr-88	B–1, B–2, G–1, G–2, G–3, G–4
Mn-54	G–1, G–2, G–3, G–4
Mo-99	G–1, G–2, G–3, G–4
N-13	B–1, B–2, G–1, G–2, G–3, G–4
O-15	B–1, B–2, G–1, G–2, G–3, G–4
P-32	B–3, B–4, B–5
Pm-147	B–3, B–4, B–5
Po-210	A–1, A–2, A–3, A–4
Pu-238	A–1, A–2, A–3, A–4
Pu-239	A–1, A–2, A–3, A–4
Pu-240	A–1, A–2, A–3, A–4
Ra–226	A–1, A–2, G–1, G–2
S-35	B–5
Se-75	G–1, G–2, G–3, G–4
Sr-90	B–3, B–4, B–5
Tc-99	B–3, B–4, B–5
Te-201	G–1, G–2, G–3, G–4
Uranium (total alpha)	A–1, A–2, A–3, A–4
Uranium (Isotopic)	A–1, A–3
Uranium (Natural)	A–5
Xe-133	G–1
Yb-169	G–1, G–2, G–3, G–4
Zn-65	G–1, G–2, G–3, G–4

4. *Quality Assurance Methods*

Each facility required to measure their radionuclide emissions shall conduct a quality assurance program in conjunction with the radionuclide emission measurements. This program shall assure that the emission measurements are representative, and are of known precision and accuracy and shall include administrative controls to assure prompt response when emission measurements indicate unexpectedly large emissions. The program shall consist of a system of policies, organizational responsibilities, written procedures, data quality specifications, audits, corrective actions and reports. This quality assurance program shall include the following program elements:

4.1 The organizational structure, functional responsibilities, levels of authority and lines of communications for all activities related to the emissions measurement program shall be identified and documented.

4.2 Administrative controls shall be prescribed to ensure prompt response in the event that emission levels increase due to unplanned operations.

4.3 The sample collection and analysis procedures used in measuring the emissions shall be described including where applicable:

4.3.1 Identification of sampling sites and number of sampling points, including the rationale for site selections.

4.3.2 A description of sampling probes and representativeness of the samples.

4.3.3 A description of any continuous monitoring system used to measure emissions, including the sensitivity of the system, calibration procedures and frequency of calibration.

4.3.4 A description of the sample collection systems for each radionuclide measured, including frequency of collection, calibration procedures and frequency of calibration.

4.3.5 A description of the laboratory analysis procedures used for each radionuclide measured, including frequency of analysis, calibration procedures and frequency of calibration.

4.3.6 A description of the sample flow rate measurement systems or procedures, including calibration procedures and frequency of calibration.

4.3.7 A description of the effluent flow rate measurement procedures, including frequency of measurements, calibration procedures and frequency of calibration.

4.4 The objectives of the quality assurance program shall be documented and shall state the required precision, accuracy and completeness of the emission measurement data including a description of the procedures used to assess these parameters. Accuracy is the degree of agreement of a measurement with a true or known value. Precision is a measure of the agreement among individual measurements of the same parameters under similar conditions. Completeness is a measure of the amount of valid data obtained compared to the amount expected under normal conditions.

4.5 A quality control program shall be established to evaluate and track the quality

of the emissions measurement data against preset criteria. The program should include where applicable a system of replicates, spiked samples, split samples, blanks and control charts. The number and frequency of such quality control checks shall be identified.

4.6 A sample tracking system shall be established to provide for positive identification of samples and data through all phases of the sample collection, analysis and reporting system. Sample handling and preservation procedures shall be established to maintain the integrity of samples during collection, storage and analysis.

4.7 Regular maintenance, calibration and field checks shall be performed for each sampling system in use by satisfying the requirements found in Table 2: Maintenance, Calibration and Field Check Requirements.

TABLE 2—MAINTENANCE, CALIBRATION AND FIELD CHECK REQUIREMENTS

Sampling system components	Frequency of activity
Cleaning of thermal anemometer elements	As required by application.
Inspect pitot tubes for contaminant deposits	At least annually.
Inspect pitot tube systems for leaks	At least annually.
Inspect sharp-edged nozzles for damage	At least annually or after maintenance that could cause damage.
Check nozzles for alignment, presence of deposits, or other potentially degrading factors.	Annually.
Check transport lines of HEPA-filtered applications to determine if cleaning is required.	Annually.
Clean transport lines	Visible deposits for HEPA-filtered applications. Surface density of 1 g/cm^3.
Inspect or test the sample transport system for leaks	At least annually.
Check mass flow meters of sampling systems with a secondary or transfer standard.	At least quarterly.
Inspect rotameters of sampling systems for presence of foreign matter.	At the start of each sampling period.
Check response of stack flow rate systems	At least quarterly.
Calibration of flow meters of sampling systems	At least annually.
Calibration of effluent flow measurement devices	At least annually.
Calibration of timing devices	At least annually.

4.8 Periodic internal and external audits shall be performed to monitor compliance with the quality assurance program. These audits shall be performed in accordance with written procedures and conducted by personnel who do not have responsibility for performing any of the operations being audited.

4.9 A corrective action program shall be established including criteria for when corrective action is needed, what corrective actions will be taken and who is responsible for taking the corrective action.

4.10 Periodic reports to responsible management shall be prepared on the performance of the emissions measurements program. These reports should include assessment of the quality of the data, results of audits and description of corrective actions.

4.11 The quality assurance program should be documented in a quality assurance project plan that should address each of the above requirements.

5. *References*

(1) American National Standards Institute ''Guide to Sampling Airborne Radioactive Materials in Nuclear Facilities'', ANSI–N13.1–1969, American National Standards Institute, New York, New York (1969).

(2) American Public Health Association, ''Methods of Air Sampling'', 2nd Edition, Method 605, ''Tentative Method of Analysis for Plutonium Content of Atmospheric Particulate Matter''. American Public Health Association, New York, NY (1977).

(3) Ibid, Method 601, ''Tentative Method of Analysis for Gross Alpha Radioactivity Content of the Atmosphere''.

(4) Ibid, Method 602, ''Tentative Method of the Analysis for Gross Beta Radioactivity Content of the Atmosphere''.

(5) Ibid, Method 608, ''Tentative Method of Analysis for Strontium-90 Content of Atmospheric Particulate Matter''.

(6) Ibid, Method 609, ''Tentative Method of Analysis for Tritium Content of the Atmosphere''.

(7) Ibid, Method 603, ''Tentative Method of Analysis for Iodine-131 Content of the Atmosphere''.

(8) American Society for Testing and Materials, 1986 Annual Book ASTM Standards, Designation D–3648–78, ''Standard Practices for the Measurement of Radioactivity''. American Society for Testing and Materials, Philadelphia, PA (1986).

(9) Ibid, Designation D–3649–85, ''Standard Practice for High Resolution Gamma Spectrometry''.

(10) Ibid, Designation D–1943–81, ''Standard Test Method for Alpha Particle Radioactivity of Water''.

(11) Ibid, Designation D–1890–81, ''Standard Test Method for Beta Particle Radioactivity of Water''.

(12) Ibid, Designation D–2459–72, ''Standard Test Method for Gamma Spectrometry of Water''.

(13) Ibid, Designation D–3972–82, ''Standard Test Method for Isotopic Uranium in Water by Radiochemistry''.

(14) Ibid, Designation D–2907–83, ''Standard Test Methods for Microquantities of Uranium in Water by Fluorometry''.

(15) Ibid, Designation E–318, ''Standard Test Method for Uranium in Aqueous Solutions by Colorimetry''.

(16) Ibid, Designation D–3084–75, ''Standard Practice for Alpha Spectrometry of Water''.

(17) Corley, J.P. and C.D. Corbit, ''A Guide for Effluent Radiological Measurements at DOE Installations'', DOE/EP–0096, Pacific Northwest Laboratories, Richland, Washington (1983).

(18) Department of Energy, ''RESL Analytical Chemistry Branch Procedures Manual'', IDO–12096, U.S. Department of Energy, Idaho Falls, Idaho (1982).

(19) Environmental Protection Agency, ''Radiochemical Analytical Procedures for Analysis of Environmental Samples'', EMSL–LV–0539–17, U.S. Environmental Protection Agency, Environmental Monitoring and Support Laboratory, Las Vegas, Nevada (1979).

(20) Environmental Protection Agency, ''Radiochemistry Procedures Manual'', EPA 520/5–84–006, Eastern Environmental Radiation Facility, Montgomery, Alabama (1984).

(21) National Council on Radiation Protection and Measurements, NCRP Report No. 50, ''Environmental Radiation Measurements'', National Council on Radiation Protection and Measurement, Bethesda, Maryland (1976).

(22) Ibid, Report No. 47, ''Tritium Measurement Techniques''. (1976).

(23) Ibid, Report No. 58 ''A Handbook of Radioactivity Measurement Procedures'' (1985).

(24) Environmental Protection Agency, ''Indoor Radon and Radon Decay Product Measurement Protocols'', EPA 520/1–89–009, U.S. Environmental Protection Agency, Washington, DC (1989).

METHOD 115—MONITORING FOR RADON-222 EMISSIONS

This appendix describes the monitoring methods which must be used in determining the radon-222 emissions from underground uranium mines, uranium mill tailings piles, phosphogypsum stacks, and other piles of waste material emitting radon.

1. *Radon-222 Emissions from Underground Uranium Mine Vents*

1.1 Sampling Frequency and Calculation of Emissions. Radon-222 emissions from underground uranium mine vents shall be determined using one of the following methods:

1.1.1 Continuous Measurement. These measurements shall be made and the emissions calculated as follows:

(a) The radon-222 concentration shall be continuously measured at each mine vent whenever the mine ventilation system is operational.

(b) Each mine vent exhaust flow rate shall be measured at least 4 times per year.

(c) A weekly radon-222 emission rate for the mine shall be calculated and recorded weekly as follows:

$A_w = C_1Q_1T_1 + C_2Q_2T_2 + \ldots C_iQ_iT_i$

Where:

A_w=Total radon-222 emitted from the mine during week (Ci)

C_i=Average radon-222 concentration in mine vent i(Ci/m^3)

Q_i=Volumetric flow rate from mine vent i(m^3/hr)

T_i=Hours of mine ventilation system operation during week for mine vent i(hr)

(d) The annual radon-222 emission rate is the sum of the weekly emission rates during a calendar year.

1.1.2 Periodic Measurement. This method is applicable only to mines that continuously operate their ventilation system except for extended shutdowns. Mines which start up and shut down their ventilation system frequently must use the continuous measurement method describe in Section 1.1.1 above. Emission rates determined using periodic measurements shall be measured and calculated as follows:

(a) The radon-222 shall be continuously measured at each mine vent for at least one week every three months.

(b) Each mine vent exhaust flow rate shall be measured at least once during each of the radon-222 measurement periods.

(c) A weekly radon-222 emission rate shall be calculated for each weekly period according to the method described in Section 1.1.1. In this calculation T=168 hr.

(d) The annual radon-222 emission rate from the mine should be calculated as follows:

$$A_y = \frac{52 - W_s}{n} \left(A_{w1} + A_{w2} + \cdots A_{wi}\right)$$

Where:

A_y=Annual radon-222 emission rate from the mine(Ci)

A_{wi}=Weekly radon-222 emission rate during the measurement period i (Ci)

n=Number of weekly measurement periods per year

W_s=Number of weeks during the year that the mine ventilation system is shut down in excess of 7 consecutive days, i.e. the sum of the number of weeks each shut down exceeds 7 days

1.2 Test Methods and Procedures

Each underground mine required to test its emissions, unless an equivalent or alternative method has been approved by the Administrator, shall use the following test methods:

1.2.1 Test Method 1 of appendix A to part 60 shall be used to determine velocity traverses. The sampling point in the duct shall be either the centroid of the cross section or the point of average velocity.

1.2.2 Test Method 2 of appendix A to part 60 shall be used to determine velocity and volumetric flow rates.

1.2.3 Test Methods A–6 or A–7 of appendix B, Method 114 to part 61 shall be used for the analysis of radon–222. Use of Method A–7 requires prior approval of EPA based on conditions described in appendix B.

1.2.4 A quality assurance program shall be conducted in conformance with the programs described for Continuous Radon Monitors and Alpha Track Detectors in EPA 520/1–89–009. (2)

2. *Radon–222 Emissions from Uranium Mill Tailings Piles*

2.1 Measurement and Calculation of Radon Flux from Uranium Mill Tailings Piles.

2.1.1 Frequency of Flux Measurement. A single set of radon flux measurements may be made, or if the owner or operator chooses, more frequent measurements may be made over a one year period. These measurements may involve quarterly, monthly or weekly intervals. All radon measurements shall be made as described in paragraphs 2.1.2 through 2.1.6 except that for measurements made over a one year period, the requirement of paragraph 2.1.4(c) shall not apply. The mean radon flux from the pile shall be the arithmetic mean of the mean radon flux for each measurement period. The weather conditions, moisture content of the tailings and area of the pile covered by water existing at the time of the measurement shall be chosen so as to provide measurements representative of the long term radon flux from the pile and shall be subject to EPA review and approval.

2.1.2 Distribution of Flux Measurements. The distribution and number of radon flux measurements required on a pile will depend on clearly defined areas of the pile (called regions) that can have significantly different radon fluxes due to surface conditions. The mean radon flux shall be determined for each individual region of the pile. Regions that shall be considered for operating mill tailings piles are:

(a) Water covered areas,
(b) Water saturated areas (beaches),
(c) Dry top surface areas, and
(d) Sides, except where earthen material is used in dam construction.

For mill tailings after disposal the pile shall be considered to consist of only one region.

2.1.3 Number of Flux Measurements. Radon flux measurements shall be made within each region on the pile, except for those areas covered with water. Measurements shall be made at regularly spaced locations across the surface of the region, realizing that surface roughness will prohibit measurements in some areas of a region. The minimum number of flux measurements considered necessary to determine a representative mean radon flux value for each type of region on an operating pile is:

(a) Water covered area—no measurements required as radon flux is assumed to be zero,
(b) Water saturated beaches—100 radon flux measurements,
(c) Loose and dry top surface—100 radon flux measurements,
(d) Sides—100 radon flux measurements, except where earthern material is used in dam construction.

For a mill tailings pile after disposal which consists of only one region a minimum of 100 measurements are required.

2.1.4 Restrictions to Radon Flux Measurements. The following restrictions are placed on making radon flux measurements:

(a) Measurements shall not be initiated within 24 hours of a rainfall.
(b) If a rainfall occurs during the 24 hour measurements period, the measurement is invalid if the seal around the lip of the collector has washed away or if the collector is surrounded by water.
(c) Measurements shall not be performed if the ambient temperature is below 35 °F or if the ground is frozen.

2.1.5 Areas of Pile Regions. The approximate area of each region of the pile shall be determined in units of square meters.

2.1.6 Radon Flux Measurement. Measuring radon flux involves the adsorption of radon on activated charcoal in a large-area collector. The radon collector is placed on the surface of the pile area to be measured and allowed to collect radon for a time period of 24 hours. The radon collected on the charcoal is measured by gamma–ray spectroscopy. The detailed measurement procedure provided in appendix A of EPA 520/5–85–0029(1) shall be used to measure the radon flux on uranium mill tailings, except the surface of the tailings shall not be penetrated by the lip of the radon collector as directed in the procedure, rather the collector shall be carefully positioned on a flat surface with soil or tailings used to seal the edge.

2.1.7 Calculations. The mean radon flux for each region of the pile and for the total pile shall be calculated and reported as follows:

(a) The individual radon flux calculations shall be made as provided in appendix A EPA 86 (1). The mean radon flux for each region of the pile shall be calculated by summing all individual flux measurements for the region and dividing by the total number of flux measurements for the region.

(b) The mean radon flux for the total uranium mill tailings pile shall be calculated as follows.

$$J_s = \frac{J_1A_1 + \cdots J_2A_2 \cdots J_iA_i}{A_t}$$

Where:

J_s=Mean flux for the total pile (pCi/m²-s)
J_i=Mean flux measured in region i (pCi/m²-s)
A_i=Area of region i (m²)
A_t=Total area of the pile (m²)

2.1.8 Reporting. The results of individual flux measurements, the approximate locations on the pile, and the mean radon flux for each region and the mean radon flux for the total stack shall be included in the emission test report. Any condition or unusual event that occurred during the measurements that could significantly affect the results should be reported.

3.0 Radon-222 Emissions from Phosphogypsum Stacks.

3.1 Measurement and Calculation of the Mean Radon Flux. Radon flux measurements shall be made on phosphogypsum stacks as described below:

3.1.1 Frequency of Measurements. A single set of radon flux measurements may be made after the phosphogypsum stack becomes inactive, or if the owner or operator chooses, more frequent measurements may be made over a one year period. These measurements may involve quarterly, monthly or weekly intervals. All radon measurements shall be made as described in paragraphs 3.1.2 through 3.1.6 except that for measurements made over a one year period, the requirement of paragraph 3.1.4(c) shall not apply. For measurements made over a one year period, the radon flux shall be the arithmetic mean of the mean radon flux for each measurement period.

3.1.2 Distribution and Number of Flux Measurements. The distribution and number of radon flux measurements required on a stack will depend on clearly defined areas of the stack (called regions) that can have significantly different radon fluxes due to surface conditions. The mean radon flux shall be determined for each individual region of the stack. Regions that shall be considered are:

(a) Water covered areas,
(b) Water saturated areas (beaches),
(c) Loose and dry top surface areas,
(d) Hard-packed roadways, and
(e) Sides.

3.1.3 Number of Flux Measurements. Radon flux measurements shall be made within each region on the phosphogypsum stack, except for those areas covered with water. Measurements shall be made at regularly spaced locations across the surface of the region, realizing that surface roughness will prohibit measurements in some areas of a region. The minimum number of flux measurements considered necessary to determine a representative mean radon flux value for each type of region is:

(a) Water covered area—no measurements required as radon flux is assumed to be zero,
(b) Water saturated beaches—50 radon flux measurements,
(c) Loose and dry top surface—100 radon flux measurements,
(d) Hard-packed roadways—50 radon flux measurements, and
(e) Sides—100 radon flux measurements.

A minimum of 300 measurements are required. A stack that has no water cover can be considered to consist of two regions, top and sides, and will require a minimum of only 200 measurements.

3.1.4 Restrictions to Radon Flux Measurements. The following restrictions are placed on making radon flux measurements:

(a) Measurements shall not be initiated within 24 hours of a rainfall.
(b) If a rainfall occurs during the 24 hour measurement period, the measurement is invalid if the seal around the lip of the collector has washed away or if the collector is surrounded by water.
(c) Measurements shall not be performed if the ambient temperature is below 35 °F or if the ground is frozen.

3.1.5 Areas of Stack Regions. The approximate area of each region of the stack shall be determined in units of square meters.

3.1.6 Radon Flux Measurements. Measuring radon flux involves the adsorption of radon on activated charcoal in a large-area collector. The radon collector is placed on the surface of the stack area to be measured and allowed to collect radon for a time period of 24 hours. The radon collected on the charcoal is measured by gamma-ray spectroscopy. The detailed measurement procedure provided in appendix A of EPA 520/5–85–0029(1) shall be used to measure the radon flux on phosphogypsum stacks, except the surface of the phosphogypsum shall not be penetrated by the lip of the radon collector as directed in the procedure, rather the collector shall be carefully positioned on a flat surface with soil or phosphogypsum used to seal the edge.

3.1.7 Calculations. The mean radon flux for each region of the phosphogypsum stack and for the total stack shall be calculated and reported as follows:

(a) The individual radon flux calculations shall be made as provided in appendix A EPA 86 (1). The mean radon flux for each region of the stack shall be calculated by summing all individual flux measurements for the region and dividing by the total number of flux measurements for the region.

(b) The mean radon flux for the total phosphogypsum stack shall be calculated as follows.

$$J_s = \frac{J_1A_1 + J_2A_2 + \cdots J_iA_i}{A_t}$$

Where:

J_s=Mean flux for the total stack (pCi/m^2-s)

J_i=Mean flux measured in region i (pCi/m^2-s)

A_i=Area of region i (m^2)

A_t=Total area of the stack

3.1.8 Reporting. The results of individual flux measurements, the approximate locations on the stack, and the mean radon flux for each region and the mean radon flux for the total stack shall be included in the emission test report. Any condition or unusual event that occurred during the measurements that could significantly affect the results should be reported.

4.0 Quality Assurance Procedures for Measuring Rn–222 Flux

A. Sampling Procedures

Records of field activities and laboratory measurements shall be maintained. The following information shall be recorded for each charcoal canister measurement:

(a) Site
(b) Name of pile
(c) Sample location
(d) Sample ID number
(e) Date and time on
(f) Date and time off
(g) Observations of meteorological conditions and comments

Records shall include all applicable information associated with determining the sample measurement, calculations, observations, and comments.

B. Sample Custody

Custodial control of all charcoal samples exposed in the field shall be maintained in accordance with EPA chain-of-custody field procedures. A control record shall document all custody changes that occur between the field and laboratory personnel.

C. Calibration Procedures and Frequency

The radioactivity of two standard charcoal sources, each containing a carefully determined quantity of radium-226 uniformly distributed through 180g of activated charcoal, shall be measured. An efficiency factor is computed by dividing the average measured radioactivity of the two standard charcoal sources, minus the background, in cpm by the known radioactivity of the charcoal sources in dpm. The same two standard charcoal sources shall be counted at the beginning and at the end of each day's counting as a check of the radioactivity counting equipment. A background count using unexposed charcoal should also be made at the beginning and at the end of each counting day to check for inadvertent contamination of the detector or other changes affecting the background. The unexposed charcoal comprising the blank is changed with each new batch of charcoal used.

D. Internal Quality Control Checks and Frequency

The charcoal from every tenth exposed canister shall be recounted. Five percent of the samples analyzed shall be either blanks (charcoal having no radioactivity added) or samples spiked with known quantities of radium-226.

E. Data Precision, Accuracy, and Completeness

The precision, accuracy, and completeness of measurements and analyses shall be within the following limits for samples measuring greater than 1.0 pCi/m^2−s.

(a) Precision: 10%

(b) Accuracy: ±10%

(c) Completeness: at least 85% of the measurements must yield useable results.

5.0 References

(1) Hartley, J.N. and Freeman, H.D., ''Radon Flux Measurements on Gardinier and Royster phosphogypsum Piles Near Tampa and Mulberry, Florida,'' U.S. Environmental Protection Agency Report, EPA 520/5–85–029, January 1986.

(2) Environmental Protection Agency, ''Indoor Radon and Radon Decay Product Measurement Protocols'', EPA 520/1–89–009, U.S. Environmental Protection Agency, Washington, DC. (1989).

[38 FR 8826, Apr. 6, 1973]

Editorial Notes: 1. For Federal Register citations to appendix B see the List of CFR Sections Affected, which appears in the Finding Aids section of the printed volume and on GPO Access.

2. At 65 FR 62161, Oct. 17, 2000, appendix B to part 61 was amended by revising Methods 101, 101A, 102, 103, 104, 105, 106, 107, 107A, 108, 108A, 108B, 108C, and 111. However, because the amendment contains no revised text for Method 107A, this part of the revision could not be incorporated.

APPENDIX C TO PART 61—QUALITY ASSURANCE PROCEDURES

Procedure 1—Determination of Adequate Chromatographic Peak Resolution

In this method of dealing with resolution, the extent to which one chromatographic peak overlaps another is determined.

For convenience, consider the range of the elution curve of each compound as running from -2σ to $+2\sigma$. This range is used in other resolution criteria, and it contains 95.45 percent of the area of a normal curve. If two peaks are separated by a known distance, b, one can determine the fraction of the area of one curve that lies within the range of the other. The extent to which the elution curve of a contaminant compound overlaps the curve of a compound that is under analysis is found by integrating the contaminant curve over the limits $b-2\sigma s$ to $b+2\sigma s$, where σs is the standard deviation of the sample curve.

This calculation can be simplified in several ways. Overlap can be determined for curves of unit area; then actual areas can be introduced. Desired integration can be resolved into two integrals of the normal distribution function for which there are convenient calculation programs and tables. An example would be Program 15 in Texas Instruments Program Manual ST1, 1975, Texas Instruments, Inc., Dallas, Texas 75222.

$$\frac{1}{\sqrt{2\pi}\sigma_c}\int_{b-2\sigma_s}^{b+2\sigma_s} e^{\left(\frac{-t_c^2}{2\sigma_c}\right)}dt = \frac{1}{\sqrt{2\pi}}\int_{\frac{b-2\sigma_s}{\sigma_c}}^{\infty} e^{\left(\frac{-x^2}{2}\right)}dx - \frac{1}{\sqrt{2\pi}}\int_{\frac{b+2\sigma_s}{\sigma_c}}^{\infty} e^{\left(\frac{-x^2}{2}\right)}dx$$

The following calculation steps are required:*

1. $2\sigma_s = t_s/\sqrt{2 \ln 2}$
2. $\sigma_c = t_c/2\sqrt{2 \ln 2}$
3. $x_1 = (b-2\sigma_s)/\sigma_c$
4. $x_2 = (b+2\sigma_s)/\sigma_c$
5. $Q(x_1) = \frac{1}{\sqrt{2\pi}}\int_{x_1}^{\infty} e^{\left(\frac{-x^2}{2}\right)}dx$
6. $Q(x_2) = \frac{1}{\sqrt{2\pi}}\int_{x_2}^{\infty} e^{\left(\frac{-x^2}{2}\right)}dx$
7. $I_o = Q(x_1) - Q(x_2)$
8. $A_o = I_o A_c/A_s$
9. Percentage overlap = $A_o \times 100$,

where:

A_s = Area of the sample peak of interest determined by electronic integration or by the formula $A_s = h_s t_s$.

A_c = Area of the contaminant peak, determined in the same manner as A_s.

b = Distance on the chromatographic chart that separates the maxima of the two peaks.

H_s = Peak height of the sample compound of interest, measured from the average value of the baseline to the maximum of the curve.

t_s = Width of sample peak of interest at 1/2 peak height.

t_c = Width of the contaminant peak at 1/2 of peak height.

σ_s = Standard deviation of the sample compound of interest elution curve.

σ_c = Standard deviation of the contaminant elution curve.

$Q(x_1)$ = Integral of the normal distribution function from x_1 to infinity.

$Q(x_2)$ = Integral of the normal distribution function from x_2 to infinity.

I_o = Overlap integral.

A_o = Area overlap fraction.

*In most instances, $Q(x_2)$ is very small and may be neglected.

In judging the suitability of alternate GC columns or the effects of altering chromatographic conditions, one can employ the area overlap as the resolution parameter with a specific maximum permissible value.

The use of Gaussian functions to describe chromatographic elution curves is widespread. However, some elution curves are highly asymmetric. In cases where the sample peak is followed by a contaminant that has a leading edge that rises sharply but the curve then tails off, it may be possible to define an effective width for t_c as ''twice the distance from the leading edge to a perpendicular line through the maxim of the contaminant curve, measured along a perpendicular bisection of that line.''

Procedure 2—Procedure for Field Auditing GC Analysis

Responsibilities of audit supervisor and analyst at the source sampling site include the following:

A. The audit supervisor verifies that audit cylinders are stored in a safe location both before and after the audit to prevent vandalism.

B. At the beginning and conclusion of the audit, the analyst records each cylinder number and pressure. An audit cylinder is never analyzed when the pressure drops below 200 psi.

C. During the audit, the analyst performs a minimum of two consecutive analyses of each audit cylinder gas. The audit must be conducted to coincide with the analysis of source test samples, normally immediately after GC calibration and prior to sample analyses.

D. At the end of audit analyses, the audit supervisor requests the calculated concentrations from the analyst and compares the results with the actual audit concentrations. If each measured concentration agrees with the respective actual concentration within ±10 percent, he directs the analyst to begin analyzing source samples. Audit supervisor judgment and/or supervisory policy determine action when agreement is not within ±10 percent. When a consistent bias in excess of 10 percent is found, it may be possible to proceed with the sample analysis, with a corrective factor to be applied to the results at a later time. However, every attempt should be made to locate the cause of the discrepancy, as it may be misleading. The audit supervisor records each cylinder number, cylinder pressure (at the end of the audit), and all calculated concentrations. The individual being audited must not under any circumstance be told actual audit concentrations until calculated concentrations have been submitted to the audit supervisor.

FIELD AUDIT REPORT

Part A— To be filled out by organization supplying audit cylinders.

1. Organization supplying audit sample(s) and shipping address

_____

2. Audit supervisor, organization, and phone number

_____

_____

3. Shipping instructions: Name, Address, Attention

_____

_____

_____

4. Guaranteed arrival date for cylinders ____

5. Planned shipping date for cylinders _____

6. Details on audit cylinders from last analysis

	Low conc.	High conc.
a. Date of last analysis	.....	.....
b. Cylinder number	.....	.....
c. Cylinder pressure, psi	.....	.....
d. Audit gas(es)/balance gas	.....	.....
e. Audit gas(es), ppm	.....	.....
f. Cylinder construction	.....	.....

Part B—To be filled out by audit supervisor.

1. Process sampled _____

_____

2. Audit location _____

_____

3. Name of individual audit _____

4. Audit date _____

5. Audit results:

	Low conc. cylinder	High conc. cylinder
a. Cylinder number	.....	.....
b. Cylinder pressure before audit, psi	.....	.....
c. Cylinder pressure after audit, psi	.....	.....
d. Measured concentration, ppm Injection #1* Injection #2* Average	.....	.....
e. Actual audit concentration, ppm (Part A, 6e)	.....	.....
f. Audit accuracy:[1]		
Low Conc. Cylinder	.....	.....
High Conc. Cylinder	.....	.....
Percent[1] accuracy= $\frac{\text{Measured Conc.} - \text{Actual Conc.}}{\text{Actual Conc.}} \times 100$		
g. Problems detected (if any)	.....	.....

[1] Results of two consecutive injections that meet the sample analysis criteria of the test method.

[47 FR 39178, Sept. 7, 1982]

APPENDIX D TO PART 61—METHODS FOR ESTIMATING RADIONUCLIDE EMISSIONS

1. Purpose and Background

Facility owners or operators may estimate radionuclide emissions to the atmosphere for dose calculations instead of measuring emissions. Particulate emissions from mill tailings piles should be estimated using the procedures listed in reference re num;2. All other emissions may be estimated by using the ''Procedures'' listed below, or using the method described in reference #1.

2. Procedure

To estimate emissions to the atmosphere:

(a) Determine the amount (in curies) used at facilities for the period under consideration. Radioactive materials in sealed packages that remain unopened, and have not leaked during the assessment period should not be included in the calculation.

(b) Multiply the amount used by the following factors which depend on the physical state of the radionuclide. They are:

(i) 1 for gases;

(ii) 10^{-3} for liquids or particulate solids; and

(iii) 10^{-6} for solids.

If any nuclide is heated to a temperature of 100 degrees Celsius or more, boils at a temperature of 100 degrees Celsius or less, or is intentionally dispersed into the environment, it must be considered to be a gas.

(c) If a control device is installed between the place of use and the point of release, multiply emissions from (b) by an adjustment factor. These are presented in Table 1.

TABLE 1—ADJUSTMENT TO EMISSION FACTORS FOR EFFLUENT CONTROLS

Controls	Types of radionuclides controlled	Adjustment factor to emissions	Comments and conditions
HEPA filters	Particulates	0.01	Not applicable to gaseous radionuclides; periodic testing is prudent to ensure high removal efficiency.
Fabric filter	Particulates	0.1	Monitoring would be prudent to guard against tears in filter.
Sintered metal	Particulates	1	Insufficient data to make recommendation.
Activated carbon filters	Iodine gas	0.1	Efficiency is time dependent; monitoring is necessary to ensure effectiveness.
Douglas bags: Held one week or longer for decay.	Xenon	0.5/wk	Based on xenon half-life of 5.3 days;
Douglas bags: Released within one week.	Xenon	1	Provides no reduction of exposure to general public.
Venturi scrubbers	Particulates	0.05	Although venturis may remove gases, variability in gaseous removal efficiency dictates adjustment factor for particulates only.
	Gases	1	
Packed bed scrubbers	Gases	0.1	Not applicable to particulates.
Electrostatic precipitators	Particulates	0.05	Not applicable for gaseous radionuclides
Xenon traps	Xenon	0.1	Efficiency is time dependent; monitoring is necessary to ensure effectiveness.
Fume hoods	All	1	Provides no reduction to general public exposures.
Vent stacks	All	1	Generally provides no reduction of exposure to general public.

References

(1) Environmental Protection Agency, ''A Guide for Determining Compliance with the Clean Air Act Standards for Radionuclides Emissions from NRC-Licensed and Non-DOE Federal Facilities'', EPA 520/1–89–002, January 1989.

(2) Nuclear Regulatory Commission, ''Methods for Estimating Radioactive and Toxic Airborne Source Terms for Uranium Milling Operations'', U.S. Nuclear Regulatory Commission Regulatory Guide 3.59, March 1987.

[54 FR 51711, Dec. 15, 1989]

APPENDIX E TO PART 61—COMPLIANCE PROCEDURES METHODS FOR DETERMINING COMPLIANCE WITH SUBPART I

1. Purpose and Background

This Appendix provides simplified procedures to reduce the burden on Nuclear Regulatory Commission (NRC) licensees, and non-Department of Energy Federal facilities in determining compliance with 40 CFR part 61, subpart I. The procedures consist of a series of increasingly more stringent steps, depending on the facility's potential to exceed the standard.

First, a facility can be found in compliance if the quantity of radioactive material possessed during the year is less than that listed in a table of annual possession quantities. A facility will also be in compliance if the average annual radionuclide emission concentration is less than that listed in a table of air concentration levels. If the facility is not in compliance by these tables, it can establish compliance by estimating a dose using screening procedure developed by the National Council on Radiation Protection and Measurements with a radiological source term derived using EPA approved emission factors. These procedures are described in a ''Guide for Determining Compliance with the Clean Air Act Standards for Radionuclide Emissions From NRC-Licenced and Non-DOE Federal Facilities.''

A user-friendly computer program called COMPLY has been developed to reduce the burden on the regulated community. The Agency has also prepared a ''User's Guide for the COMPLY Code'' to assist the regulated community in using the code, and in handling more complex situations such as multiple release points. The basis for these compliance procedures are provided in ''Background Information Document: Procedures Approved for Demonstrating Compliance with 40 CFR Part 61, Subpart I''. The compliance model is the highest level in the COMPLY computer code and provides for the most realistic assessment of dose by allowing the use of site-specific information.

2. Table of Annual Possession Quantity

(a) Table 1 may be used for determining if facilities are in compliance with the standard. The possession table can only be used if the following conditions are met:

(i) No person lives within 10 meters of any release point; and

(ii) No milk, meat, or vegetables are produced within 100 meters of any release point.

(b) Procedures described in Reference (1) shall be used to determine compliance or exemption from reporting by use of Table 2.

TABLE 1—ANNUAL POSSESSION QUANTITIES FOR ENVIRONMENTAL COMPLIANCE

[Annual Possession Quantities (Ci/yr)]

Radionuclide	Gaseous form*	Liquid/ powder forms	Solid form*
Ac-225	9.6E−05	9.6E−02	9.6E+01
Ac-227	1.6E−07	1.6E−04	1.6E−01
Ac-228	3.4E−03	3.4E+00	3.4E+03
Ag-106	1.6E+00	1.6E+03	1.6E+06
Ag-106m	2.6E−03	2.6E+00	2.6E+03
Ag-108m	6.5E−06	6.5E−03	6.5E+00
Ag-110m	9.4E−05	9.4E−02	9.4E+01
Ag-111	6.7E−02	6.7E+01	6.7E+04
Al-26	4.0E−06	4.0E−03	4.0E+00
Am-241	2.3E−06	2.3E−03	2.3E+00
Am-242	1.8E−02	1.8E+01	1.8E+04
Am-242m	2.5E−06	2.5E−03	2.5E+00

TABLE 1—ANNUAL POSSESSION QUANTITIES FOR ENVIRONMENTAL COMPLIANCE—Continued

[Annual Possession Quantities (Ci/yr)]

Radionuclide	Gaseous form*	Liquid/ powder forms	Solid form*
Am-243	2.3E−06	2.3E−03	2.3E+00
Am-244	4.6E−02	4.6E+01	4.6E+04
Am-245	7.0E+00	7.0E+03	7.0E+06
Am-246	9.8E−01	9.8E+02	9.8E+05
Ar-37	1.4E+06	.....	.....
Ar-41	1.4E+00	.....	.....
As-72	2.9E−02	2.9E+01	2.9E+04
As-73	6.0E−02	6.0E+01	6.0E+04
As-74	4.3E−03	4.3E+00	4.3E+03
As-76	8.8E−02	8.8E+01	8.8E+04
As-77	7.9E−01	7.9E+02	7.9E+05
At-211	1.0E−02	1.0E+01	1.0E+04
Au-193	4.2E−01	4.2E+02	4.2E+05
Au-194	3.5E−02	3.5E+01	3.5E+04
Au-195	3.3E−03	3.3E+00	3.3E+03
Au-198	4.6E−02	4.6E+01	4.6E+04
Au-199	1.5E−01	1.5E+02	1.5E+05
Ba-131	1.0E−02	1.0E+01	1.0E+04
Ba-133	4.9E−05	4.9E−02	4.9E+01
Ba-133m	9.3E−02	9.3E+01	9.3E+04
Ba-135m	5.8E−01	5.8E+02	5.8E+05
Ba-139	4.7E+00	4.7E+03	4.7E+06
Ba-140	2.1E−03	2.1E+00	2.1E+03
Ba-141	1.3E+00	1.3E+03	1.3E+06
Ba-142	1.1E+00	1.1E+03	1.1E+06
Be-7	2.3E−02	2.3E+01	2.3E+04
Be-10	3.0E−03	3.0E+00	3.0E+03
Bi-206	3.1E−03	3.1E+00	3.1E+03
Bi-207	8.4E−06	8.4E−03	8.4E+00
Bi-210	4.2E−03	4.2E+00	4.2E+03
Bi-212	4.7E−02	4.7E+01	4.7E+04
Bi-213	6.0E−02	6.0E+01	6.0E+04
Bi-214	1.4E−01	1.4E+02	1.4E+05
Bk-249	7.0E−04	7.0E−01	7.0E+02
Bk-250	1.0E−01	1.0E+02	1.0E+05
Br-77	7.5E−02	7.5E+01	7.5E+04
Br-80	1.2E+01	1.2E+04	1.2E+07
Br-80m	1.5E+00	1.5E+03	1.5E+06
Br-82	1.6E−02	1.6E+01	1.6E+04
Br-83	9.9E+00	9.9E+03	9.9E+06
Br-84	5.6E−01	5.6E+02	5.6E+05
C-11	1.3E+00	1.3E+03	1.3E+06
C-14	2.9E−01	2.9E+02	2.9E+05
Ca-41	2.7E−02	2.7E+01	2.7E+04
Ca-45	5.8E−02	5.8E+01	5.8E+04
Ca-47	1.1E−02	1.1E+01	1.1E+04
Cd-109	5.0E−03	5.0E+00	5.0E+03
Cd-113	3.3E−04	3.3E−01	3.3E+02
Cd-113m	4.4E−04	4.4E−01	4.4E+02
Cd-115	5.4E−02	5.4E+01	5.4E+04
Cd-115m	1.0E−02	1.0E+01	1.0E+04
Cd-117	5.6E−02	5.6E+01	5.6E+04
Cd-117m	1.3E−01	1.3E+02	1.3E+05
Ce-139	2.6E−03	2.6E+00	2.6E+03
Ce-141	1.8E−02	1.8E+01	1.8E+04
Ce-143	1.0E−01	1.0E+02	1.0E+05
Ce-144	1.7E−03	1.7E+00	1.7E+03
Cf-248	2.0E−05	2.0E−02	2.0E+01
Cf-249	1.7E−06	1.7E−03	1.7E+00
Cf-250	4.0E−06	4.0E−03	4.0E+00
Cf-251	1.7E−06	1.7E−03	1.7E+00
Cf-252	6.4E−06	6.4E−03	6.4E+00
Cf-253	3.3E−04	3.3E−01	3.3E+02
Cf-254	3.6E−06	3.6E−03	3.6E+00
Cl-36	1.9E−04	1.9E−01	1.9E+02
Cl-38	6.5E−01	6.5E+02	6.5E+05
Cm-242	6.0E−05	6.0E−02	6.0E+01
Cm-243	3.3E−06	3.3E−03	3.3E+00

TABLE 1—ANNUAL POSSESSION QUANTITIES FOR ENVIRONMENTAL COMPLIANCE—Continued

[Annual Possession Quantities (Ci/yr)]

Radionuclide	Gaseous form*	Liquid/ powder forms	Solid form*
Cm-244	4.2E−06	4.2E−03	4.2E+00
Cm-245	2.3E−06	2.3E−03	2.3E+00
Cm-246	2.3E−06	2.3E−03	2.3E+00
Cm-247	2.3E−06	2.3E−03	2.3E+00
Cm-248	6.4E−07	6.4E−04	6.4E−01
Cm-249	4.6E+00	4.6E+03	4.6E+06
Cm-250	1.1E−07	1.1E−04	1.1E−01
Co-56	2.4E−04	2.4E−01	2.4E+02
Co-57	1.6E−03	1.6E+00	1.6E+03
Co-58	9.0E−04	9.0E−01	9.0E+02
Co-58m	1.7E−01	1.7E+02	1.7E+05
Co-60	1.6E−05	1.6E−02	1.6E+01
Co-60m	4.0E+00	4.0E+03	4.0E+06
Co-61	3.8E+00	3.8E+03	3.8E+06
Cr-49	9.0E−01	9.0E+02	9.0E+05
Cr-51	6.3E−02	6.3E+01	6.3E+04
Cs-129	1.5E−01	1.5E+02	1.5E+05
Cs-131	2.8E−01	2.8E+02	2.8E+05
Cs-132	1.3E−02	1.3E+01	1.3E+04
Cs-134	5.2E−05	5.2E−02	5.2E+01
Cs-134m	3.2E−01	3.2E+02	3.2E+05
Cs-135	2.4E−02	2.4E+01	2.4E+04
Cs-136	2.1E−03	2.1E+00	2.1E+03
Cs-137	2.3E−05	2.3E−02	2.3E+01
Cs-138	4.4E−01	4.4E+02	4.4E+05
Cu-61	4.0E−01	4.0E+02	4.0E+05
Cu-64	5.2E−01	5.2E+02	5.2E+05
Cu-67	1.5E−01	1.5E+02	1.5E+05
Dy-157	4.4E−01	4.4E+02	4.4E+05
Dy-165	5.6E+00	5.6E+03	5.6E+06
Dy-166	8.1E−02	8.1E+01	8.1E+04
Er-169	4.0E−01	4.0E+02	4.0E+05
Er-171	3.6E−01	3.6E+02	3.6E+05
Es-253	2.6E−04	2.6E−01	2.6E+02
Es-254	2.3E−05	2.3E−02	2.3E+01
Es-254m	1.8E−03	1.8E+00	1.8E+03
Eu-152	1.6E−05	1.6E−02	1.6E+01
Eu-152m	3.5E−01	3.5E+02	3.5E+05
Eu-154	2.0E−05	2.0E−02	2.0E+01
Eu-155	5.2E−04	5.2E−01	5.2E+02
Eu-156	3.2E−03	3.2E+00	3.2E+03
F-18	5.6E−01	5.6E+02	5.6E+05
Fe-52	4.9E−02	4.9E+01	4.9E+04
Fe-55	1.4E−01	1.4E+02	1.4E+05
Fe-59	1.3E−03	1.3E+00	1.3E+03
Fm-254	1.8E−02	1.8E+01	1.8E+04
Fm-255	4.0E−03	4.0E+00	4.0E+03
Fr-223	1.4E−01	1.4E+02	1.4E+05
Ga-66	5.6E−02	5.6E+01	5.6E+04
Ga-67	1.1E−01	1.1E+02	1.1E+05
Ga-68	7.6E−01	7.6E+02	7.6E+05
Ga-72	3.6E−02	3.6E+01	3.6E+04
Gd-152	4.4E−06	4.4E−03	4.4E+00
Gd-153	2.0E−03	2.0E+00	2.0E+03
Gd-159	6.8E−01	6.8E+02	6.8E+05
Ge-68	2.3E−04	2.3E−01	2.3E+02
Ge-71	2.6E+00	2.6E+03	2.6E+06
Ge-77	1.0E−01	1.0E+02	1.0E+05
H-3	1.5E+01	1.5E+04	1.5E+07
Hf-181	2.5E−03	2.5E+00	2.5E+03
Hg-193m	9.5E−02	9.5E+01	9.5E+04
Hg-197	2.4E−01	2.4E+02	2.4E+05
Hg-197m	2.5E−01	2.5E+02	2.5E+05
Hg-203	5.2E−03	5.2E+00	5.2E+03
Ho-166	2.8E−01	2.8E+02	2.8E+05
Ho-166m	6.0E−06	6.0E−03	6.0E+00
I-123	4.9E−01	4.9E+02	4.9E+05
I-124	9.3E−03	9.3E+00	9.3E+03

TABLE 1—ANNUAL POSSESSION QUANTITIES FOR ENVIRONMENTAL COMPLIANCE—Continued

[Annual Possession Quantities (Ci/yr)]

Radionuclide	Gaseous form*	Liquid/ powder forms	Solid form*
I-125	6.2E−03	6.2E+00	6.2E+03
I-126	3.7E−03	3.7E+00	3.7E+03
I-128	9.3E+00	9.3E+03	9.3E+06
I-129	2.6E−04	2.6E−01	2.6E+02
I-130	4.6E−02	4.6E+01	4.6E+04
I-131	6.7E−03	6.7E+00	6.7E+03
I-132	2.0E−01	2.0E+02	2.0E+05
I-133	6.7E−02	6.7E+01	6.7E+04
I-134	3.2E−01	3.2E+02	3.2E+05
I-135	1.2E−01	1.2E+02	1.2E+05
In-111	4.9E−02	4.9E+01	4.9E+04
In-113m	2.1E+00	2.1E+03	2.1E+06
In-114m	4.9E−03	4.9E+00	4.9E+03
In-115	2.7E−04	2.7E−01	2.7E+02
In-115m	1.4E+00	1.4E+03	1.4E+06
In-116m	3.5E−01	3.5E+02	3.5E+05
In-117	1.3E+00	1.3E+03	1.3E+06
In-117m	7.6E−02	7.6E+01	7.6E+04
Ir-190	3.5E−03	3.5E+00	3.5E+03
Ir-192	9.7E−04	9.7E−01	9.7E+02
Ir-194	2.5E−01	2.5E+02	2.5E+05
Ir-194m	1.5E−04	1.5E−01	1.5E+02
K-40	6.8E−05	6.8E−02	6.8E+01
K-42	2.9E−01	2.9E+02	2.9E+05
K-43	6.0E−02	6.0E+01	6.0E+04
K-44	4.9E−01	4.9E+02	4.9E+05
Kr-79	7.0E+00	.....	.....
Kr-81	1.8E+02	.....	.....
Kr-83m	2.0E+04	.....	.....
Kr-85	8.4E+02	.....	.....
Kr-85m	1.1E+01	.....	.....
Kr-87	2.0E+00	.....	.....
Kr-88	4.2E−01	.....	.....
La-140	1.6E−02	1.6E+01	1.6E+04
La-141	1.1E+00	1.1E+03	1.1E+06
La-142	2.3E−01	2.3E+02	2.3E+05
Lu-177	1.4E−01	1.4E+02	1.4E+05
Lu-177m	3.5E−04	3.5E−01	3.5E+02
Mg-28	2.1E−02	2.1E+01	2.1E+04
Mn-52	3.5E−03	3.5E+00	3.5E+03
Mn-52m	5.2E−01	5.2E+02	5.2E+05
Mn-53	5.7E−02	5.7E+01	5.7E+04
Mn-54	2.5E−04	2.5E−01	2.5E+02
Mn-56	2.5E−01	2.5E+02	2.5E+05
Mo-93	1.5E−03	1.5E+00	1.5E+03
Mo-99**	5.7E−02	5.7E+01	5.7E+04
Mo-101	8.4E−01	8.4E+02	8.4E+05
Na-22	3.2E−05	3.2E−02	3.2E+01
Na-24	2.6E−02	2.6E+01	2.6E+04
Nb-90	2.5E−02	2.5E+01	2.5E+04
Nb-93m	1.2E−02	1.2E+01	1.2E+04
Nb-94	6.0E−06	6.0E−03	6.0E+00
Nb-95	2.3E−03	2.3E+00	2.3E+03
Nb-95m	2.0E−02	2.0E+01	2.0E+04
Nb-96	2.5E−02	2.5E+01	2.5E+04
Nb-97	1.0E+00	1.0E+03	1.0E+06
Nd-147	3.0E−02	3.0E+01	3.0E+04
Nd-149	1.1E+00	1.1E+03	1.1E+06
Ni-56	2.0E−03	2.0E+00	2.0E+03
Ni-57	2.1E−02	2.1E+01	2.1E+04
Ni-59	2.2E−02	2.2E+01	2.2E+04
Ni-63	1.4E−01	1.4E+02	1.4E+05
Ni-65	7.0E−01	7.0E+02	7.0E+05
Np-235	3.0E−02	3.0E+01	3.0E+04
Np-237	1.8E−06	1.8E−03	1.8E+00
Np-238	1.9E−02	1.9E+01	1.9E+04
Np-239	1.0E−01	1.0E+02	1.0E+05
Np-240	6.5E−01	6.5E+02	6.5E+05

TABLE 1—ANNUAL POSSESSION QUANTITIES FOR ENVIRONMENTAL COMPLIANCE—Continued

[Annual Possession Quantities (Ci/yr)]

Radionuclide	Gaseous form*	Liquid/ powder forms	Solid form*
Np-240m	4.7E+00	4.7E+03	4.7E+06
Os-185	9.2E−04	9.2E−01	9.2E+02
Os-191m	9.0E−01	9.0E+02	9.0E+05
Os-191	3.8E−02	3.8E+01	3.8E+04
Os-193	2.9E−01	2.9E+02	2.9E+05
P-32	1.7E−02	1.7E+01	1.7E+04
P-33	1.2E−01	1.2E+02	1.2E+05
Pa-230	6.3E−04	6.3E−01	6.3E+02
Pa-231	8.3E−07	8.3E−04	8.3E−01
Pa-233	9.3E−03	9.3E+00	9.3E+03
Pa-234	9.3E−02	9.3E+01	9.3E+04
Pb-203	8.3E−02	8.3E+01	8.3E+04
Pb-205	1.2E−02	1.2E+01	1.2E+04
Pb-209	1.1E+01	1.1E+04	1.1E+07
Pb-210	5.5E−05	5.5E−02	5.5E+01
Pb-211	1.2E−01	1.2E+02	1.2E+05
Pb-212	6.0E−03	6.0E+00	6.0E+03
Pb-214	1.2E−01	1.2E+02	1.2E+05
Pd-103	2.1E−01	2.1E+02	2.1E+05
Pd-107	8.2E−02	8.2E+01	8.2E+04
Pd-109	9.4E−01	9.4E+02	9.4E+05
Pm-143	7.6E−04	7.6E−01	7.6E+02
Pm-144	1.1E−04	1.1E−01	1.1E+02
Pm-145	5.2E−04	5.2E−01	5.2E+02
Pm-146	4.4E−05	4.4E−02	4.4E+01
Pm-147	2.6E−02	2.6E+01	2.6E+04
Pm-148	1.7E−02	1.7E+01	1.7E+04
Pm-148m	7.6E−04	7.6E−01	7.6E+02
Pm-149	2.8E−01	2.8E+02	2.8E+05
Pm-151	1.2E−01	1.2E+02	1.2E+05
Po-210	9.3E−05	9.3E−02	9.3E+01
Pr-142	2.8E−01	2.8E+02	2.8E+05
Pr-143	1.0E−01	1.0E+02	1.0E+05
Pr-144	1.5E+01	1.5E+04	1.5E+07
Pt-191	6.4E−02	6.4E+01	6.4E+04
Pt-193	2.1E−02	2.1E+01	2.1E+04
Pt-193m	4.8E−01	4.8E+02	4.8E+05
Pt-195m	1.4E−01	1.4E+02	1.4E+05
Pt-197	1.1E+00	1.1E+03	1.1E+06
Pt-197m	3.6E+00	3.6E+03	3.6E+06
Pu-236	7.0E−06	7.0E−03	7.0E+00
Pu-237	2.3E−02	2.3E+01	2.3E+04
Pu-238	2.7E−06	2.7E−03	2.7E+00
Pu-239	2.5E−06	2.5E−03	2.5E+00
Pu-240	2.5E−06	2.5E−03	2.5E+00
Pu-241	1.3E−04	1.3E−01	1.3E+02
Pu-242	2.5E−06	2.5E−03	2.5E+00
Pu-243	3.8E+00	3.8E+03	3.8E+06
Pu-244	2.4E−06	2.4E−03	2.4E+00
Pu-245	2.1E−01	2.1E+02	2.1E+05
Pu-246	4.8E−03	4.8E+00	4.8E+03
Ra-223	1.3E−04	1.3E−01	1.3E+02
Ra-224	3.2E−04	3.2E−01	3.2E+02
Ra-225	1.3E−04	1.3E−01	1.3E+02
Ra-226	5.5E−06	5.5E−03	5.5E+00
Ra-228	1.3E−05	1.3E−02	1.3E+01
Rb-81	4.2E−01	4.2E+02	4.2E+05
Rb-83	1.4E−03	1.4E+00	1.4E+03
Rb-84	2.0E−03	2.0E+00	2.0E+03
Rb-86	1.7E−02	1.7E+01	1.7E+04
Rb-87	1.0E−02	1.0E+01	1.0E+04
Rb-88	1.7E+00	1.7E+03	1.7E+06
Rb-89	6.4E−01	6.4E+02	6.4E+05
Re−184	1.8E−03	1.8E+00	1.8E+03
Re-184m	3.6E−04	3.6E−01	3.6E+02
Re-186	1.9E−01	1.9E+02	1.9E+05
Re-187	9.3E+00	9.3E+03	9.3E+06
Re-188	3.7E−01	3.7E+02	3.7E+05

TABLE 1—ANNUAL POSSESSION QUANTITIES FOR ENVIRONMENTAL COMPLIANCE—Continued

[Annual Possession Quantities (Ci/yr)]

Radionuclide	Gaseous form*	Liquid/ powder forms	Solid form*
Rh-103m	1.7E+02	1.7E+05	1.7E+08
Rh-105	3.4E−01	3.4E+02	3.4E+05
Ru-97	8.3E−02	8.3E+01	8.3E+04
Ru-103	3.1E−03	3.1E+00	3.1E+03
Ru-105	2.9E−01	2.9E+02	2.9E+05
Ru-106	5.9E−04	5.9E−01	5.9E+02
S-35	7.5E−02	7.5E+01	7.5E+04
Sb-117	2.0E+00	2.0E+03	2.0E+06
Sb-122	3.9E−02	3.9E+01	3.9E+04
Sb-124	6.0E−04	6.0E−01	6.0E+02
Sb-125	1.4E−04	1.4E−01	1.4E+02
Sb-126	1.8E−03	1.8E+00	1.8E+03
Sb-126m	7.6E−01	7.6E+02	7.6E+05
Sb-127	2.0E−02	2.0E+01	2.0E+04
Sb-129	1.8E−01	1.8E+02	1.8E+05
Sc-44	1.4E−01	1.4E+02	1.4E+05
Sc-46	4.0E−04	4.0E−01	4.0E+02
Sc-47	1.1E−01	1.1E+02	1.1E+05
Sc-48	1.1E−02	1.1E+01	1.1E+04
Sc-49	1.0E+01	1.0E+04	1.0E+07
Se-73	1.6E−01	1.6E+02	1.6E+05
Se-75	1.1E−03	1.1E+00	1.1E+03
Se-79	6.9E−03	6.9E+00	6.9E+03
Si-31	4.7E+00	4.7E+03	4.7E+06
Si-32	7.2E−04	7.2E−01	7.2E+02
Sm-147	1.4E−05	1.4E−02	1.4E+01
Sm-151	3.5E−02	3.5E+01	3.5E+04
Sm-153	2.4E−01	2.4E+02	2.4E+05
Sn-113	1.9E−03	1.9E+00	1.9E+03
Sn-117m	2.3E−02	2.3E+01	2.3E+04
Sn-119m	2.8E−02	2.8E+01	2.8E+04
Sn-123	1.8E−02	1.8E+01	1.8E+04
Sn-125	7.2E−03	7.2E+00	7.2E+03
Sn-126	4.7E−06	4.7E−03	4.7E+00
Sr-82	1.9E−03	1.9E+00	1.9E+03
Sr-85	1.9E−03	1.9E+00	1.9E+03
Sr-85m	1.5E+00	1.5E+03	1.5E+06
Sr-87m	1.2E+00	1.2E+03	1.2E+06
Sr-89	2.1E−02	2.1E+01	2.1E+04
Sr-90	5.2E−04	5.2E−01	5.2E+02
Sr-91	1.2E−01	1.2E+02	1.2E+05
Sr-92	2.5E−01	2.5E+02	2.5E+05
Ta-182	4.4E−04	4.4E−01	4.4E+02
Tb-157	2.2E−03	2.2E+00	2.2E+03
Tb-160	8.4E−04	8.4E−01	8.4E+02
Tc-95	9.0E−02	9.0E+01	9.0E+04
Tc-95m	1.4E−03	1.4E+00	1.4E+03
Tc-96	5.6E−03	5.6E+00	5.6E+03
Tc-96m	7.0E−01	7.0E+02	7.0E+05
Tc-97	1.5E−03	1.5E+00	1.5E+03
Tc-97m	7.2E−02	7.2E+01	7.2E+04
Tc-98	6.4E−06	6.4E−03	6.4E+00
Tc-99	9.0E−03	9.0E+00	9.0E+03
Tc-99m	1.4E+00	1.4E+03	1.4E+06
Tc-101	3.8E+00	3.8E+03	3.8E+06
Te-121	6.0E−03	6.0E+00	6.0E+03
Te-121m	5.3E−04	5.3E−01	5.3E+02
Te-123	1.2E−03	1.2E+00	1.2E+03
Te-123m	2.7E−03	2.7E+00	2.7E+03
Te-125m	1.5E−02	1.5E+01	1.5E+04
Te-127	2.9E+00	2.9E+03	2.9E+06
Te-127m	7.3E−03	7.3E+00	7.3E+03
Te-129	6.5E+00	6.5E+03	6.5E+06
Te-129m	6.1E−03	6.1E+00	6.1E+03
Te-131	9.4E−01	9.4E+02	9.4E+05
Te-131m	1.8E−02	1.8E+01	1.8E+04
Te-132	6.2E−03	6.2E+00	6.2E+03
Te-133	1.2E+00	1.2E+03	1.2E+06

TABLE 1—ANNUAL POSSESSION QUANTITIES FOR ENVIRONMENTAL COMPLIANCE—Continued

[Annual Possession Quantities (Ci/yr)]

Radionuclide	Gaseous form*	Liquid/ powder forms	Solid form*
Te-133m	2.9E−01	2.9E+02	2.9E+05
Te-134	4.4E−01	4.4E+02	4.4E+05
Th-226	3.0E−02	3.0E+01	3.0E+04
Th-227	6.4E−05	6.4E−02	6.4E+01
Th-228	2.9E−06	2.9E−03	2.9E+00
Th-229	4.9E−07	4.9E−04	4.9E−01
Th-230	3.2E−06	3.2E−03	3.2E+00
Th-231	8.4E−01	8.4E+02	8.4E+05
Th-232	6.0E−07	6.0E−04	6.0E−01
Th-234	2.0E−02	2.0E+01	2.0E+04
Ti-44	5.2E−06	5.2E−03	5.2E+00
Ti-45	4.0E−01	4.0E+02	4.0E+05
Tl-200	4.4E−02	4.4E+01	4.4E+04
Tl-201	1.8E−01	1.8E+02	1.8E+05
Tl-202	1.0E−02	1.0E+01	1.0E+04
Tl-204	2.5E−02	2.5E+01	2.5E+04
Tm-170	2.4E−02	2.4E+01	2.4E+04
Tm-171	5.9E−02	5.9E+01	5.9E+04
U-230	5.0E−05	5.0E−02	5.0E+01
U-231	1.4E−01	1.4E+02	1.4E+05
U-232	1.3E−06	1.3E−03	1.3E+00
U-233	7.6E−06	7.6E−03	7.6E+00
U-234	7.6E−06	7.6E−03	7.6E+00
U-235	7.0E−06	7.0E−03	7.0E+00
U-236	8.4E−06	8.4E−03	8.4E+00
U-237	4.7E−02	4.7E+01	4.7E+04
U-238	8.6E−06	8.6E−03	8.6E+00
U-239	8.3E+00	8.3E+03	8.3E+06
U-240	1.8E−01	1.8E+02	1.8E+05
V-48	1.4E−03	1.4E+00	1.4E+03
V-49	1.3E+00	1.3E+03	1.3E+06
W-181	1.1E−02	1.1E+01	1.1E+04
W-185	1.6E−01	1.6E+02	1.6E+05
W-187	1.1E−01	1.1E+02	1.1E+05
W-188	1.0E−02	1.0E+01	1.0E+04
Xe-122	7.6E−02	7.6E+01	7.6E+04
Xe-123	1.6E+00	1.6E+03	1.6E+06
Xe-125	6.0E−01	.....	.....
Xe-127	7.0E+00	.....	.....
Xe-129m	7.6E+01	.....	.....
Xe-131m	2.2E+02	.....	.....
Xe-133	5.2E+01	.....	.....
Xe-133m	6.0E+01	.....	.....
Xe-135	7.6E+00	.....	.....
Xe-135m	4.2E+00	.....	.....
Xe-138	9.9E−01	.....	.....
Y-86	2.8E−02	2.8E+01	2.8E+04
Y-87	2.3E−02	2.3E+01	2.3E+04
Y-88	2.5E−04	2.5E−01	2.5E+02
Y-90	1.1E−01	1.1E+02	1.1E+05
Y-90m	4.3E−01	4.3E+02	4.3E+05
Y-91	1.8E−02	1.8E+01	1.8E+04
Y-91m	1.6E+00	1.6E+03	1.6E+06
Y-92	7.0E−01	7.0E+02	7.0E+05
Y-93	3.8E−01	3.8E+02	3.8E+05
Yb-169	5.5E−03	5.5E+00	5.5E+03
Yb-175	2.1E−01	2.1E+02	2.1E+05
Zn-62	8.6E−02	8.6E+01	8.6E+04
Zn-65	4.4E−04	4.4E−01	4.4E+02
Zn-69	2.7E+01	2.7E+04	2.7E+07
Zn-69m	2.0E−01	2.0E+02	2.0E+05
Zr-86	2.4E−02	2.4E+01	2.4E+04
Zr-88	2.7E−04	2.7E−01	2.7E+02
Zr-89	1.6E−02	1.6E+01	1.6E+04
Zr-93	2.8E−03	2.8E+00	2.8E+03
Zr-95	6.4E−04	6.4E−01	6.4E+02
Zr-97	4.6E−02	4.6E+01	4.6E+04

*Radionuclides boiling at 100 °C or less, or exposed to a temperature of 100 °C, must be considered a gas. Capsules containing radionuclides in liquid or powder form can be considered to be solids.

**Mo-99 contained in a generator to produce Technetium-99 can be assumed to be a solid.

3. Table of Concentration Levels

(a) Table 2 may be used for determining if facilities are in compliance with the standard.

1. The concentration table as applied to emission estimates can only be used if all releases are from point sources and concentrations have been measured at the stack or vent using EPA-approved methods, and the distance between each stack or vent and the nearest resident is greater than 3 times the diameter of the stack or vent. Procedures provided in Ref. (1) shall be used to determine compliance or exemption from reporting by use of Table 2.

2. The concentration table may be used to determine compliance with the standard based on environmental measurements provided these measurements are made in conformance with the requirements of §61.107(b)(5).

4. NCRP Screening Model

The procedures described in Reference (4) may be used to determine doses to members of the general public from emissions of radionuclides to the atmosphere. Both the total dose from all radionuclides emitted, and the dose caused by radioactive iodine must be considered in accordance with the procedures in Ref. (1).

5. The COMPLY Computer Code

The COMPLY computer code may be used to determine compliance with subpart I. The compliance model in the COMPLY computer code may be used to determine the dose to members of the general public from emissions of radionuclides to the atmosphere. The EPA may add radionuclides to all or any part of COMPLY to cover radionuclides that may be used by the regulated community.

TABLE 2—CONCENTRATION LEVELS FOR ENVIRONMENTAL COMPLIANCE

Radionuclide	Concentration (Ci/m³)	Radionuclide	Concentration (Ci/m³)
Ac-225	9.1E−14	Bi-207	1.0E−14
Ac-227	1.6E−16	Bi-210	2.9E−13
Ac-228	3.7E−12	Bi-212	5.6E−11
Ag-106	1.9E−09	Bi-213	7.1E−11
Ag-106m	1.2E−12	Bi-214	1.4E−10
Ag-108m	7.1E−15	Bk-249	5.6E−13
Ag-110m	9.1E−14	Bk-250	9.1E−11
Ag-111	2.5E−12	Br-77	4.2E−11
Al-26	4.8E−15	Br-80	1.4E−08
Am-241	1.9E−15	Br-80m	1.8E−09
Am-242	1.5E−11	Br-82	1.2E−11
Am-242m	2.0E−15	Br-83	1.2E−08
Am-243	1.8E−15	Br-84	6.7E−10
Am-244	4.0E−11	C-11	1.5E−09
Am-245	8.3E−09	C-14	1.0E−11
Am-246	1.2E−09	Ca-41	4.2E−13
Ar-37	1.6E−03	Ca-45	1.3E−12
Ar-41	1.7E−09	Ca-47	2.4E−12
As-72	2.4E−11	Cd-109	5.9E−13
As-73	1.1E−11	Cd-113	9.1E−15
As-74	2.2E−12	Cd-113m	1.7E−14
As-76	5.0E−11	Cd-115	1.6E−11
As-77	1.6E−10	Cd-115m	8.3E−13
At-211	1.1E−11	Cd-117	6.7E−11
Au-193	3.8E−10	Cd-117m	1.6E−10
Au-194	3.2E−11	Ce-139	2.6E−12
Au-195	3.1E−12	Ce-141	6.3E−12
Au-198	2.1E−11	Ce-143	3.0E−11
Au-199	4.8E−11	Ce-144	6.2E−13
Ba-131	7.1E−12	Cf-248	1.8E−14
Ba-133	5.9E−14	Cf-249	1.4E−15
Ba-133m	5.9E−11	Cf-250	3.2E−15
Ba-135m	1.8E−10	Cf-251	1.4E−15
Ba-139	5.6E−09	Cf-252	5.6E−15
Ba-140	1.3E−12	Cf-253	3.1E−13
Ba-141	1.4E−09	Cf-254	3.0E−15
Ba-142	1.3E−09	Cl-36	2.7E−15
Be-7	2.3E−11	Cl-38	7.7E−10
Be-10	1.6E−12	Cm-242	5.3E−14
Bi-206	2.3E−12	Cm-243	2.6E−15
Cm-244	3.3E−15	Eu-156	1.9E−12
Cm-245	1.8E−15	F-18	6.7E−10
Cm-246	1.9E−15	Fe-52	5.6E−11
Cm-247	1.9E−15	Fe-55	9.1E−12
Cm-248	5.0E−16	Fe-59	6.7E−13
Cm-249	3.7E−09	Fm-254	2.0E−11
Cm-250	9.1E−17	Fm-255	4.3E−12
Co-56	1.8E−13	Fr-223	3.3E−11
Co-57	1.3E−12	Ga-66	6.2E−11
Co-58	6.7E−13	Ga-67	7.1E−11
Co-58m	1.2E−10	Ga-68	9.1E−10
Co-60	1.7E−14	Ga-72	3.8E−11
Co-60m	.4.3E−09	Gd-152	5.0E−15
Co-61	4.5E−09	Gd-153	2.1E−12
Cr-49	1.1E−09	Gd-159	2.9E−10
Cr-51	3.1E−11	Ge-68	2.0E−13
Cs-129	1.4E−10	Ge-71	2.4E−10
Cs-131	3.3E−11	Ge-77	1.0E−10
Cs-132	4.8E−12	H-3	1.5E−09
Cs-134	2.7E−14	Hf-181	1.9E−12
Cs-134m	1.7E−10	Hg-193m	1.0E−10
Cs-135	4.0E−13	Hg-197	8.3E−11
Cs-136	5.3E−13	Hg-197m	1.1E−10
Cs-137	1.9E−14	Hg-203	1.0E−12
Cs-138	5.3E−10	Ho-166	7.1E−11
Cu-61	4.8E−10	Ho-166m	7.1E−15
Cu-64	5.3E−10	I-123	4.3E−10
Cu-67	5.0E−11	I-124	6.2E−13
Dy-157	5.0E−10	I-125	1.2E−13
Dy-165	6.7E−09	I-126	1.1E−13

TABLE 2—CONCENTRATION LEVELS FOR ENVIRONMENTAL COMPLIANCE—Continued

Radionuclide	Concentration (Ci/m³)	Radionuclide	Concentration (Ci/m³)
Dy-166	1.1E−11	I-128	1.1E−08
Er-169	2.9E−11	I-129	9.1E−15
Er-171	4.0E−10	I-130	4.5E−11
Es-253	2.4E−13	I-131	2.1E−13
Es-254	2.0E−14	I-132	2.3E−10
Es-254m	1.8E−12	I-133	2.0E−11
Eu-152	2.0E−14	I-134	3.8E−10
Eu-152m	3.6E−10	I-135	1.2E−10
Eu-154	2.3E−14	In-111	3.6E−11
Eu-155	5.9E−13	In-113m	2.5E−09
In-114m	9.1E−13	Nb-95	2.2E−12
In-115	7.1E−14	Nb-95m	1.4E−11
In-115m	1.6E−09	Nb-96	2.4E−11
In-116m	4.2E−10	Nb-97	1.2E−09
In-117	1.6E−09	Nd-147	7.7E−12
In-117m	9.1E−11	Nd-149	7.1E−10
Ir-190	2.6E−12	Ni-56	1.7E−12
Ir-192	9.1E−13	Ni-57	1.8E−11
Ir-194	1.1E−10	Ni-59	1.5E−11
Ir-194m	1.7E−13	Ni-63	1.4E−11
K-40	2.7E−14	Ni-65	8.3E−10
K-42	2.6E−10	Np-235	2.5E−11
K-43	6.2E−11	Np-237	1.2E−15
K-44	5.9E−10	Np-238	1.4E−11
Kr-79	8.3E−09	Np-239	3.8E−11
Kr-81	2.1E−07	Np-240	7.7E−10
Kr-83m	2.3E−05	Np-240m	5.6E−09
Kr-85	1.0E−06	Os-185	1.0E−12
Kr-85m	1.3E−08	Os-191m	2.9E−10
Kr-87	2.4E−09	Os-191	1.1E−11
Kr-88	5.0E−10	Os-193	9.1E−11
La-140	1.2E−11	P-32	3.3E−13
La-141	7.7E−10	P-33	2.4E−12
La-142	2.7E−10	Pa-230	3.2E−13
Lu-177	2.4E−11	Pa-231	5.9E−16
Lu-177m	3.6E−13	Pa-233	4.8E−12
Mg-28	1.5E−11	Pa-234	1.1E−10
Mn-52	2.8E−12	Pb-203	6.2E−11
Mn-52m	6.2E−10	Pb-205	5.6E−12
Mn-53	1.5E−11	Pb-209	1.3E−08
Mn-54	2.8E−13	Pb-2I0	2.8E−15
Mn-56	2.9E−10	Pb-211	1.4E−10
Mo-93	1.1E−12	Pb-212	6.3E−12
Mo-99	1.4E−11	Pb-214	1.2E−10
Mo-101	1.0E−09	Pd-103	3.8E−11
Na-22	2.6E−14	Pd-107	3.1E−11
Na-24	2.6E−11	Pd-109	4.8E−10
Nb-90	2.6E−11	Pm-143	9.1E−13
Nb-93m	1.0E−11	Pm-144	1.3E−13
Nb-94	7.1E−15	Pm-145	6.2E−13
Pm-146	5.3E−14	Re-184m	3.7E−13
Pm-147	1.1E−11	Re-186	1.8E−11
Pm-148	5.0E−12	Re-187	2.6E−10
Pm-148m	6.7E−13	Re-188	1.7E−10
Pm-149	4.2E−11	Rh-103m	2.1E−07
Pm-151	7.1E−11	Rh-105	1.3E−10
Po-210	7.1E−15	Ru-97	6.7E−11
Pr-142	1.1E−10	Ru-103	2.6E−12
Pr-143	7.1E−12	Ru-105	2.8E−10
Pr-144	1.8E−08	Ru-106	3.4E−13
Pt-191	4.3E−11	S-35	1.3E−12
Pt-193	1.8E−11	Sb-117	2.4E−09
Pt-193m	4.8E−11	Sb-122	1.4E−11
Pt-195m	3.2E−11	Sb-124	5.3E−13
Pt-197	4.0E−10	Sb-125	1.6E−13
Pt-197m	2.6E−09	Sb-126	1.4E−12
Pu-236	5.9E−15	Sb-126m	9.1E−10
Pu-237	1.9E−11	Sb-127	7.1E−12
Pu-238	2.1E−15	Sb-129	7.7E−11
Pu-239	2.0E−15	Sc-44	1.7E−10

TABLE 2—CONCENTRATION LEVELS FOR ENVIRONMENTAL COMPLIANCE—Continued

Radionuclide	Concentration (Ci/m³)	Radionuclide	Concentration (Ci/m³)
Pu-240	2.0E−15	Sc-46	4.2E−13
Pu-241	1.0E−13	Sc-47	3.8E−11
Pu-242	2.0E−15	Sc-48	9.1E−12
Pu-243	4.2E−09	Sc-49	1.2E−08
Pu-244	2.0E−15	Se-73	1.7E−10
Pu-245	2.1E−10	Se-75	1.7E−13
Pu-246	2.2E−12	Se-79	1.1E−13
Ra-223	4.2E−14	Si-31	5.6E−09
Ra-224	1.5E−13	Si-32	3.4E−14
Ra-225	5.0E−14	Sm-147	1.4E−14
Ra-226	3.3E−15	Sm-151	2.1E−11
Ra-228	5.9E−15	Sm-153	5.9E−11
Rb-81	5.0E−10	Sn-113	1.4E−12
Rb-83	3.4E−13	Sn-117m	5.6E−12
Rb-84	3.6E−13	Sn-119m	5.3E−12
Rb-86	5.6E−13	Sn-123	1.1E−12
Rb-87	1.6E−13	Sn-125	1.7E−12
Rb-88	2.1E−09	Sn-126	5.3E−15
Rb-89	7.1E−10	Sr-82	6.2E−13
Re-184	1.5E−12	Sr-85	1.8E−12
Sr-85m	1.6E−09	Th-232	6.2E−16
Sr-87m	1.4E−09	Th-234	2.2E−12
Sr-89	1.8E−12	Ti-44	6.2E−15
Sr-90	1.9E−14	Ti-45	4.8E−10
Sr-91	9.1E−11	Tl-200	4.5E−11
Sr-92	2.9E−10	Tl-201	1.0E−10
Ta-182	4.5E−13	Tl-202	5.0E−12
Tb-157	2.5E−12	Tl-204	1.2E−12
Tb-160	7.7E−13	Tm-170	3.3E−12
Tc-95	1.0E−10	Tm-171	2.6E−11
Tc-95m	1.4E−12	U-230	1.5E−14
Tc-96	5.6E−12	U-231	4.2E−11
Tc-96m	6.7E−10	U-232	1.3E−15
Tc-97	.7.1E−13	U-233	7.1E−15
Tc-97m	7.1E−12	U-234	7.7E−15
Tc-98	6.7E−15	U-235	7.1E−15
Tc-99	1.4E−13	U-236	7.7E−15
Tc-99m	1.7E−09	U-237	1.0E−11
Tc-101	4.5E−09	U-238	8.3E−15
Te-121	1.0E−12	U-239	4.3E−09
Te-121m	1.2E−13	U-240	1.3E−10
Te-123	1.4E−13	V-48	1.0E−12
Te-123m	2.0E−13	V-49	1.6E−10
Te-125m	3.6E−13	W-181	6.7E−12
Te-127	1.0E−09	W-185	2.6E−12
Te-127m	1.5E−13	W-187	7.7E−11
Te-129	7.7E−09	W-188	5.3E−13
Te-129m	1.4E−13	Xe-122	9.1E−11
Te-131	9.1E−11	Xe-123	1.6E−09
Te-131m	1.0E−12	Xe-125	1.1E−11
Te-132	7.1E−13	Xe-127	8.3E−09
Te-133	9.1E−10	Xe-129m	9.1E−08
Te-133m	2.2E−10	Xe-131m	2.6E−07
Te-134	5.3E−10	Xe-133	6.2E−08
Th-226	3.4E−11	Xe-133m	7.1E−08
Th-227	3.8E−14	Xe-135	9.1E−09
Th-228	3.1E−15	Xe-135m	5.0E−09
Th-229	5.3E−16	Xe-138	1.2E−09
Th-230	3.4E−15	Y-86	3.0E−11
Th-231	2.9E−10	Y-87	1.7E−11
Y-88	2.7E−13	Zn-65	9.1E−14
Y-90	1.3E−11	Zn-69	3.2E−08
Y-90m	1.9E−10	Zn-69m	1.7E−10
Y-91	2.1E−12	Zr-86	2.4E−11
Y-91m	1.3E−09	Zr-88	3.1E−13
Y-92	8.3E−10	Zr-89	1.3E−11
Y-93	2.9E−10	Zr-93	2.6E−12
Yb-169	3.7E−12	Zr-95	6.7E−13
Yb-175	4.3E−11	Zr-97	3.8E−11
Zn-62	9.1E−11		

6. References

(1) Environmental Protection Agency, ''A Guide for Determining Compliance with the Clean Air Act Standards for Radionuclides Emissions from NRC-Licensed and Non-DOE Federal Facilities'', EPA 520/1–89–002, October 1989.

(2) Environmental Protection Agency, ''User's Guide for the COMPLY Code'', EPA 520/1–89–003, October 1989.

(3) Environmental Protection Agency, ''Background Information Document: Procedures Approved for Demonstrating Compliance with 40 CFR Part 61, Subpart I'', EPA 520/1–89–001, January 1989.

(4) National Council on Radiation Protection and Measurement, ''Screening Techniques for Determining Compliance with Environmental Standards'' NCRP Commentary No. 3, Revision of January 1989 with addendum of October, 1989.

[54 FR 51711, Dec. 15, 1989]

PART 62—APPROVAL AND PROMULGATION OF STATE PLANS FOR DESIGNATED FACILITIES AND POLLUTANTS

Subpart A—General Provisions

Sec.
62.01 Definitions.
62.02 Introduction.
62.03 Extensions.
62.04 Approval status.
62.05 Legal authority.
62.06 Negative declarations.
62.07 Emissions standards, compliance schedules.
62.08 Emission inventories and source surveillance.
62.09 Revision of plans by Administrator.
62.10 Submission to Administrator.
62.11 Severability.
62.12 Availability of applicable plans.
62.13 Federal plans.

Subpart B—Alabama

PLAN FOR THE CONTROL OF DESIGNATED POLLUTANTS FROM EXISTING FACILITIES (SECTION 111(d) PLAN)

62.100 Identification of plan.

SULFURIC ACID MIST FROM EXISTING SULFURIC ACID PLANTS

62.101 Identification of sources.

FLUORIDE EMISSIONS FROM PHOSPHATE FERTILIZER PLANTS

62.102 Identification of sources.

LANDFILL GAS EMISSIONS FROM EXISTING MUNICIPAL SOLID WASTE LANDFILLS

62.103 Identification of sources.

METALS, ACID GASES, ORGANIC COMPOUNDS AND NITROGEN OXIDE EMISSIONS FROM EXISTING MUNICIPAL WASTE COMBUSTORS WITH THE CAPACITY TO COMBUST GREATER THAN 250 TONS PER DAY OF MUNICIPAL SOLID WASTE

62.104 Identification of sources.

AIR EMISSIONS FROM HOSPITAL/MEDICAL/INFECTIOUS WASTE INCINERATORS

62.105 Identification of sources.

AIR EMISSIONS FROM SMALL EXISTING MUNICIPAL WASTE COMBUSTION UNITS

62.106 Identification of plan—negative declaration.

AIR EMISSIONS FROM COMMERCIAL AND INDUSTRIAL SOLID WASTE INCINERATION (CISWI) UNITS—SECTION 111(D)/129 PLAN

62.107 Identification of sources.

Subpart C—Alaska

FLUORIDE EMISSIONS FROM PHOSPHATE FERTILIZER PLANTS

62.350 Identification of plan—negative declaration.

ACID MIST FROM SULFURIC ACID PLANTS

62.351 Identification of plan—negative declaration.

TOTAL REDUCED SULFUR EMISSIONS FROM KRAFT PULP MILLS

62.352 Identification of plan—negative declaration.

FLUORIDE EMISSIONS FROM PRIMARY ALUMINUM REDUCTION PLANTS

62.353 Identification of plan—negative declaration.

EMISSIONS FROM EXISTING MUNICIPAL WASTE COMBUSTORS WITH THE CAPACITY TO BURN GREATER THAN 250 TONS PER DAY OF MUNICIPAL SOLID WASTE

62.354 Identification of plan—negative declaration.

Subpart D—Arizona

LANDFILL GAS EMISSIONS FROM EXISTING MUNICIPAL SOLID WASTE LANDFILLS

62.600 Identification of plan.
62.601 Identification of sources.
62.602 Effective date.

EMISSIONS FROM EXISTING MUNICIPAL WASTE COMBUSTORS WITH THE CAPACITY TO BURN GREATER THAN 250 TONS PER DAY OF MUNICIPAL SOLID WASTE

62.620 Identification of plan—negative declaration.

EMISSIONS FROM EXISTING HOSPITAL/MEDICAL/INFECTIOUS WASTE INCINERATORS

62.630 Identification of plan.
62.631 Identification of sources.
62.632 Effective date.

EMISSIONS FROM SMALL EXISTING MUNICIPAL WASTE COMBUSTION UNITS

62.640 Identification of plan—negative declaration.

Subpart E—Arkansas

PLAN FOR THE CONTROL OF DESIGNATED POLLUTANTS FROM EXISTING FACILITIES (SECTION 111(d) PLAN)

62.850 Identification of plan.
62.852 [Reserved]

FLUORIDE EMISSIONS FROM EXISTING PHOSPHATE FERTILIZER PLANTS

62.854 Identification of plan—negative declaration.

SULFURIC ACID MIST EMISSIONS FROM EXISTING SULFURIC ACID PLANTS

62.855 Identification of sources.

TOTAL REDUCED SULPHUR EMISSIONS FROM EXISTING KRAFT PULP MILLS

62.865 Identification of sources.
62.866 Compliance schedule.

EMISSIONS FROM EXISTING MUNICIPAL WASTE COMBUSTORS WITH THE CAPACITY TO BURN GREATER THAN 250 TONS PER DAY OF MUNICIPAL SOLID WASTE

62.875 Identification of plan—negative declaration.

Subpart F—California

PLAN FOR THE CONTROL OF DESIGNATED POLLUTANTS FROM EXISTING FACILITIES (SECTION 111(d) PLAN)

62.1100 Identification of plan.

FLUORIDE EMISSIONS FROM EXISTING PHOSPHATE FERTILIZER PLANTS

62.1101 Identification of sources.

SULFURIC ACID MIST EMISSIONS FROM EXISTING SULFURIC ACID PRODUCTION UNITS

62.1102 Identification of sources.

FLUORIDE EMISSIONS FROM PRIMARY ALUMINUM REDUCTION PLANTS

62.1103 Identification of plan—negative declaration.

TOTAL REDUCED SULPHUR EMISSIONS FROM EXISTING KRAFT PULP MILLS

62.1104 Identification of sources.

LANDFILL GAS EMISSIONS FROM EXISTING MUNICIPAL SOLID WASTE LANDFILLS

62.1115 Identification of sources.

EMISSIONS FROM SMALL EXISTING MUNICIPAL WASTE COMBUSTION UNITS

62.1125 Identification of plan—negative declaration.

EMISSIONS FROM LARGE EXISTING MUNICIPAL WASTE COMBUSTION UNITS

62.1130 Identification of sources.

Subpart G—Colorado

LANDFILL GAS EMISSIONS FROM EXISTING MUNICIPAL SOLID WASTE LANDFILLS

62.1350 Identification of plan.
62.1351 Identification of sources.
62.1352 Effective date.

AIR EMISSIONS FROM HOSPITAL/MEDICAL/INFECTIOUS WASTE INCINERATORS

62.1360 Identification of plan.
62.1361 Identification of sources.
62.1362 Effective date.

EMISSIONS FROM EXISTING MUNICIPAL WASTE COMBUSTORS WITH THE CAPACITY TO BURN GREATER THAN 250 TONS PER DAY OF MUNICIPAL SOLID WASTE

62.1370 Identification of plan—negative declaration.

Subpart H—Connecticut

PLAN FOR THE CONTROL OF DESIGNATED POLLUTANTS FROM EXISTING FACILITIES (SECTION 111(D) PLAN)

62.1500 Identification of Plan.

METALS, ACID GASES, ORGANIC COMPOUNDS AND NITROGEN OXIDE EMISSIONS FROM EXISTING MUNICIPAL WASTE COMBUSTOR UNITS WITH THE CAPACITY TO COMBUST GREATER THAN 250 TONS PER DAY OF MUNICIPAL SOLID WASTE

62.1501 Identification of sources.

FLOURIDE EMISSIONS FROM PHOSPHATE FERTILIZER PLANTS

62.1600 Identification of plan—negative declaration.

SULFURIC ACID MIST EMISSIONS FROM SULFURIC ACID PRODUCTION UNITS

62.1625 Identification of plan—negative declaration.

TOTAL REDUCED SULFUR EMISSIONS FROM EXISTING KRAFT PULP MILLS

62.1650 Identification of plan—negative declaration.

FLUORIDE EMISSIONS FROM EXISTING PRIMARY ALUMINUM PLANTS

62.1700 Identification of plan—negative declaration.

Subpart I—Delaware

FLUORIDE EMISSIONS FROM PHOSPHATE FERTILIZER PLANTS

62.1850 Identification of plan—negative declaration.

SULFURIC ACID MIST FROM EXISTING SULFURIC ACID PLANTS

62.1875 Identification of plan.

TOTAL REDUCED SULFUR EMISSIONS FROM EXISTING KRAFT PULP MILLS

62.1900 Identification of plan—negative declaration.

FLUORIDE EMISSIONS FROM PRIMARY ALUMINUM REDUCTION PLANTS

62.1925 Identification of plan—negative declaration.

LANDFILL GAS EMISSIONS FROM EXISTING MUNICIPAL SOLID WASTE LANDFILLS (SECTION 111(d) PLAN)

62.1950 Identification of plan.
62.1951 Identification of sources.
62.1952 Effective date.

EMISSIONS FROM EXISTING MUNICIPAL WASTE COMBUSTORS WITH THE CAPACITY TO BURN GREATER THAN 250 TONS PER DAY OF MUNICIPAL SOLID WASTE

62.1960 Identification of plan—negative declaration.

EMISSIONS FROM EXISTING HOSPITAL/MEDICAL/INFECTIOUS WASTE INCINERATORS (HMIWI)—SECTION 111(d)/129 PLAN

62.1975 Identification of plan.
62.1976 Identification of sources.
62.1977 Effective date.

EMISSIONS FROM EXISTING SMALL MUNICIPAL WASTE COMBUSTION UNITS

62.1980 Identification of plan—negative declaration.

EMISSIONS FROM EXISTING COMMERCIAL/INDUSTRIAL SOLID WASTE INCINERATION UNITS

62.1985 Identification of plan—negative declaration.

Subpart J—District of Columbia

FLUORIDE EMISSIONS FROM PHOSPHATE FERTILIZER PLANTS

62.2100 Identification of plan—negative declaration.

SULFURIC ACID MIST EMISSIONS FROM EXISTING SULFURIC ACID PLANTS

62.2101 Identification of plan—negative declaration.

TOTAL REDUCED SULFUR EMISSIONS FROM EXISTING KRAFT PULP MILLS

62.2110 Identification of plan—negative declaration.

FLUORIDE EMISSIONS FROM EXISTING PRIMARY ALUMINUM PLANTS

62.2120 Identification of plan—negative declaration.

EMISSIONS FROM EXISTING MUNICIPAL WASTE COMBUSTORS WITH THE CAPACITY TO BURN GREATER THAN 250 TONS PER DAY OF MUNICIPAL SOLID WASTE

62.2130 Identification of plan—negative declaration.

LANDFILL GAS EMISSIONS FROM EXISTING MUNICIPAL SOLID WASTE LANDFILLS

62.2140 Identification of plan—negative declaration.

EMISSIONS FROM EXISTING SMALL MUNICIPAL WASTE COMBUSTION UNITS

62.2145 Identification of plan—negative declaration.

EMISSIONS FROM EXISTING HOSPITAL/MEDICAL/INFECTIOUS WASTE INCINERATOR (HMIWI) UNITS

62.2150 Identification of plan—negative declaration.

EMISSIONS FROM EXISTING COMMERCIAL/INDUSTRIAL SOLID WASTE INCINERATION UNITS

62.2155 Identification of plan—negative declaration.

Subpart K—Florida

PLAN FOR THE CONTROL OF DESIGNATED POLLUTANTS FROM EXISTING FACILITIES (SECTION 111(d) PLAN)

62.2350 Identification of plan.

SULFURIC ACID MIST FROM EXISTING SULFURIC ACID PLANTS

62.2351 Identification of sources.

FLUORIDE EMISSIONS FROM PRIMARY ALUMINUM REDUCTION PLANTS

62.2352 Identification of source—negative declaration.

TOTAL REDUCED SULFUR EMISSIONS FROM KRAFT PULP MILLS AND TALL OIL PLANTS

62.2353 Identification of sources.
62.2354 Compliance schedules.

METALS, ACID GASES, ORGANIC COMPOUNDS AND NITROGEN OXIDE EMISSIONS FROM EXISTING MUNICIPAL WASTE COMBUSTORS WITH THE CAPACITY TO COMBUST GREATER THAN 250 TONS PER DAY OF MUNICIPAL SOLID WASTE

62.2355 Identification of sources.

LANDFILL GAS EMISSIONS FROM EXISTING MUNICIPAL SOLID WASTE LANDFILLS

62.2360 Identification of sources.

AIR EMISSIONS FROM HOSPITAL/MEDICAL/INFECTIOUS WASTE INCINERATORS

62.2370 Identification of sources.

AIR EMISSIONS FROM COMMERCIAL AND INDUSTRIAL SOLID WASTE INCINERATION (CISWI) UNITS—SECTION 111(D)/129 PLAN

62.2380 Air Emissions From Commercial and Industrial Solid Waste Incineration (CISWI) Units—Section 111(d)/129 Plan

Subpart L—Georgia

PLAN FOR THE CONTROL OF DESIGNATED POLLUTANTS FROM EXISTING FACILITIES (SECTION 111(d) PLAN)

62.2600 Identification of plan.

SULFURIC ACID MIST FROM EXISTING SULFURIC ACID PLANTS

62.2601 Identification of sources.

FLUORIDE EMISSIONS FROM PHOSPHATE FERTILIZER PLANTS

62.2602 Identification of sources—negative declaration.

TOTAL REDUCED SULFUR EMISSIONS FROM KRAFT PULP MILLS

62.2603 Identification of sources.
62.2604 [Reserved]

FLUORIDE EMISSIONS FROM EXISTING PRIMARY ALUMINUM REDUCTION PLANTS

62.2605 Identification of sources—negative declaration.

METALS, ACID GASES, ORGANIC COMPOUNDS AND NITROGEN OXIDE EMISSIONS FROM EXISTING MUNICIPAL WASTE COMBUSTORS WITH THE CAPACITY TO COMBUST GREATER THAN 250 TONS PER DAY OF MUNICIPAL SOILD WASTE

62.2606 Identification of sources.

LANDFILL GAS EMISSIONS FROM EXISTING MUNICIPAL SOLID WASTE LANDFILLS

62.2607 Identification of sources.

AIR EMISSIONS FROM HOSPITAL/MEDICAL/INFECTIOUS WASTE INCINERATORS

62.2608 Identification of sources.

AIR EMISSIONS FROM SMALL EXISTING MUNICIPAL WASTE COMBUSTION UNITS

62.2609 Identification of plan—negative declaration.

Subpart M—Hawaii

EMISSIONS FROM SMALL EXISTING MUNICIPAL WASTE COMBUSTION UNITS

62.2850 Identification of plan—negative declaration.

Subpart N—Idaho

FLUORIDE EMISSIONS FROM EXISTING PRIMARY ALUMINUM PLANTS

62.3100 Identification of plan—negative declaration.

METALS, ACID GASES, ORGANIC COMPOUNDS, PARTICULATES AND NITROGEN OXIDE EMISSIONS FROM EXISTING HOSPITAL/MEDICAL/INFECTIOUS WASTE INCINERATORS

62.3110 Identification of plan.

CONTROL OF NON-METHANE ORGANIC COMPOUNDS EMISSIONS FROM EXISTING MUNICIPAL SOLID WASTE LANDFILLS

62.3120 Identification of plan.

EMISSIONS FROM EXISTING MUNICIPAL WASTE COMBUSTORS WITH THE CAPACITY TO BURN GREATER THAN 250 TONS PER DAY OF MUNICIPAL SOLID WASTE

62.3130 Identification of plan—negative declaration.

Subpart O—Illinois

SULFURIC ACID MIST EMISSIONS FROM EXISTING SULFURIC ACID PRODUCTION PLANTS

62.3300 Identification of plan.

TOTAL REDUCED SULFUR EMISSIONS FROM KRAFT PULP MILLS

62.3325 Identification of plan—negative declaration.

LANDFILL GAS EMISSIONS FROM EXISTING MUNICIPAL SOLID WASTE LANDFILLS

62.3330 Identification of plan.
62.3331 Identification of sources.
62.3332 Effective date.

EMISSIONS FROM SMALL MUNICIPAL WASTE COMBUSTION UNITS WITH THE CAPACITY TO COMBUST AT LEAST 35 TONS PER DAY OF MUNICIPAL SOLID WASTE BUT NO MORE THAN 250 TONS PER DAY OF MUNICIPAL SOLID WASTE AND COMMENCED CONSTRUCTION ON OR BEFORE AUGUST 30, 1999

62.3335 Identification of plan—negative declaration.

METALS, ACID GASES, ORGANIC COMPOUNDS AND NITROGEN OXIDE EMISSIONS FROM EXISTING HOSPITAL / MEDICAL INFECTIOUS WASTE INCINERATORS

62.3340 Identification of plan.
62.3341 Identification of sources.
62.3342 Effective date.

METAL, ACID GASES, ORGANIC COMPOUNDS AND NITROGEN OXIDE EMISSIONS FROM EXISTING MUNICIPAL WASTE COMBUSTORS WITH THE CAPACITY TO COMBUST GREATER THAN 250 TONS PER DAY OF MUNICIPAL SOLID WASTE

62.3350 Identification of plan.

Subpart P—Indiana

FLUORIDE EMISSIONS FROM PHOSPHATE FERTILIZER PLANTS

62.3600 Identification of plan—negative declaration.

FLUORIDE EMISSIONS FROM EXISTING PRIMARY ALUMINUM PLANTS

62.3625 Identification of plan.

LANDFILL GAS EMISSIONS FROM EXISTING MUNICIPAL SOLID WASTE LANDFILLS

62.3630 Identification of plan.
62.3631 Identification of sources.
62.3632 Effective date.

METALS, ACID GASES, ORGANIC COMPOUNDS AND NITROGEN OXIDE EMISSIONS FROM EXISTING HOSPITAL/MEDICAL INFECTIOUS WASTE INCINERATORS

62.3640 Identification of plan.
62.3641 Identification of sources.
62.3642 Effective date.

EMISSIONS FROM SMALL MUNICIPAL WASTE COMBUSTION UNITS WITH THE CAPACITY TO COMBUST AT LEAST 35 TONS PER DAY OF MUNICIPAL SOLID WASTE BUT NO MORE THAN 250 TONS PER DAY OF MUNICIPAL SOLID WASTE AND COMMENCED CONSTRUCTION ON OR BEFORE AUGUST 30, 1999

62.3645 Identification of plan—negative declaration.

METALS, ACID GASES, ORGANIC COMPOUNDS AND NITROGEN OXIDE EMISSIONS FROM EXISTING MUNICIPAL WASTE COMBUSTORS WITH THE CAPACITY TO COMBUST GREATER THAN 250 TONS PER DAY OF MUNICIPAL SOLID WASTE

62.3650 Identification of plan.
62.3651 Identification of sources.
62.3652 Effective date.

CONTROL OF AIR EMISSIONS FROM EXISTING COMMERCIAL AND INDUSTRIAL SOLID WASTE INCINERATOR UNITS

62.3660 Identification of plan.

Subpart Q—Iowa

PLAN FOR THE CONTROL OF DESIGNATED POLLUTANTS FROM EXISTING FACILITIES (SECTION 111(d) PLAN)

62.3850 Identification of plan.

SULFURIC ACID MIST FROM EXISTING SULFURIC ACID PRODUCTION PLANTS

62.3851 Identification of sources.

FLUORIDE EMISSIONS FROM EXISTING PHOSPHATE FERTILIZER PLANTS

62.3852 Identification of sources.

TOTAL REDUCED SULFUR EMISSIONS FROM EXISTING KRAFT PULP MILLS

62.3853 Identification of plan—negative declaration.

FLUORIDE EMISSIONS FROM EXISTING PRIMARY ALUMINUM REDUCTION PLANTS

62.3854 Identification of plan—negative declaration.

TOTAL REDUCED SULFUR EMISSIONS FROM EXISTING KRAFT PULP MILLS

62.3910 Identification of plan—negative declaration.

EMISSIONS FROM EXISTING MUNICIPAL WASTE COMBUSTORS WITH THE CAPACITY TO BURN GREATER THAN 250 TONS PER DAY OF MUNICIPAL SOLID WASTE

62.3911 Identification of plan—negative declaration.

EMISSIONS FROM EXISTING MUNICIPAL WASTE COMBUSTORS WITH THE CAPACITY TO BURN GREATER THAN 35 MEGAGRAMS PER DAY OF MUNICIPAL SOLID WASTE

62.3912 Identification of plan-negative declaration.

AIR EMISSIONS FROM EXISTING MUNICIPAL SOLID WASTE LANDFILLS

62.3913 Identification of plan.

AIR EMISSIONS FROM EXISTING HOSPITAL/MEDICAL/INFECTIOUS WASTE INCINERATORS

62.3914 Identification of plan.

AIR EMISSIONS FROM SMALL EXISTING MUNICIPAL WASTE COMBUSTION UNITS

62.3915 Identification of plan—negative declaration.

Subpart R—Kansas

FLOURIDE EMISSIONS FROM EXISTING PHOSPHATE FERTILIZER PLANTS

62.4100 Identification of plan—negative declaration.

TOTAL REDUCED SULFUR EMISSIONS FROM EXISTING KRAFT PULP MILLS

62.4125 Identification of plan—negative declaration.

FLUORIDE EMISSIONS FROM EXISTING PRIMARY ALUMINUM REDUCTION PLANTS

62.4150 Identification of plan—negative declaration.

SULFURIC ACID MIST FROM EXISTING SULFURIC ACID PRODUCTION PLANTS

62.4175 Identification of plan.

EMISSIONS FROM EXISTING MUNICIPAL WASTE COMBUSTORS WITH THE CAPACITY TO BURN GREATER THAN 250 TONS PER DAY OF MUNICIPAL SOLID WASTE

62.4176 Identification of plan—negative declaration.

EMISSIONS FROM EXISTING MUNICIPAL WASTE COMBUSTORS WITH THE CAPACITY TO BURN GREATER THAN 35 MEGAGRAMS PER DAY OF MUNICIPAL SOLID WASTE

62.4177 Identification of plan—negative declaration.

AIR EMISSIONS FROM EXISTING MUNICIPAL SOLID WASTE LANDFILLS

62.4178 Identification of plan.

AIR EMISSIONS FROM EXISTING HOSPITAL/MEDICAL/INFECTIOUS WASTE INCINERATORS

62.4179 Identification of plan.

AIR EMISSIONS FROM SMALL EXISTING MUNICIPAL WASTE COMBUSTION UNITS

62.4180 Identification of plan—negative declaration.

AIR EMISSIONS FROM EXISTING COMMERCIAL AND INDUSTRIAL SOLID WASTE INCINERATION UNITS

62.4181 Identification of plan—negative declaration.

Subpart S—Kentucky

PLAN FOR THE CONTROL OF DESIGNATED POLLUTANTS FROM EXISTING FACILITIES (SECTION 111(d) PLAN)

62.4350 Identification of plan.

SULFURIC ACID MIST FROM EXISTING SULFURIC ACID PLANTS

62.4351 Identification of sources.

TOTAL REDUCED SULFUR FROM EXISTING KRAFT PULP MILLS

62.4352 Identification of sources.

FLUORIDE EMISSIONS FROM EXISTING PRIMARY ALUMINUM REDUCTION PLANTS

62.4353 Identification of sources.

FLUORIDE EMISSIONS FROM PHOSPHATE FERTILIZER PLANTS

62.4354 Identification of plan—negative declaration.

LANDFILL GAS EMISSIONS FROM EXISTING MUNICIPAL SOLID WASTE LANDFILLS

62.4355 Identification of sources.

EMISSIONS FROM EXISTING MUNICIPAL WASTE COMBUSTORS WITH THE CAPACITY TO BURN GREATER THAN 250 TONS PER DAY OF MUNICIPAL SOLID WASTE

62.4370 Identification of plan—negative declaration.

AIR EMISSIONS FROM SMALL EXISTING MUNICIPAL WASTE COMBUSTION UNITS

62.4371 Identification of plan—negative declaration.

Subpart T—Louisiana

PLAN FOR CONTROL OF DESIGNATED POLLUTANTS FROM EXISTING FACILITIES (SECTION 111(d) PLAN)

62.4620 Identification of plan.
62.4621 Emission standards and compliance schedules.
62.4622 Emission inventories, source surveillance, reports.
62.4623 Legal authority.

SULFURIC ACID MIST FROM EXISTING SULFURIC ACID PLANTS

62.4624 Identification of sources.

FLUORIDE EMISSIONS FROM EXISTING PHOSPHATE FERTILIZER PLANTS

62.4625 Identification of sources.
62.4626 Effective date.

FLUORIDE EMISSIONS FROM EXISTING PRIMARY ALUMINUM PLANTS

62.4627 Identification of sources.
62.4628 Effective date.

TOTAL REDUCED SULFUR EMISSIONS FROM EXISTING KRAFT PULP MILLS

62.4629 Identification of sources.
62.4630 Effective date.

LANDFILL GAS EMISSIONS FROM EXISTING MUNICIPAL SOLID WASTE LANDFILLS

62.4631 Identification of Sources.
62.4632 Effective Date.

AIR EMISSIONS FROM HAZARDOUS/MEDICAL/INFECTIOUS WASTE INCINERATORS

62.4633 Identification of sources.

EFFECTIVE DATE

62.4634 Effective date.

EMISSIONS FROM EXISTING MUNICIPAL WASTE COMBUSTORS WITH THE CAPACITY TO BURN GREATER THAN 250 TONS PER DAY OF MUNICIPAL SOLID WASTE

62.4650 Identification of plan—negative declaration.

EMISSIONS FROM EXISTING SMALL MUNICIPAL WASTE COMBUSTION UNITS

62.4660 Identification of sources—negative declaration.

Subpart U—Maine

PLAN FOR THE CONTROL OF DESIGNATED POLLUTANTS FROM EXISTING FACILITIES (SECTION 111(d) PLAN)

62.4845 Identification of plan.

FLUORIDE EMISSIONS FROM EXISTING PRIMARY ALUMINUM PLANTS

62.4875 Identification of sources—negative declaration.

SULFURIC ACID MIST FROM EXISTING SULFURIC ACID PLANTS

62.4900 Identification of sources.

TOTAL REDUCED SULFUR FROM EXISTING KRAFT PULP MILLS

62.4925 Identification of sources.

FLOURIDE EMISSIONS FROM PHOSPHATE FERTILIZER PLANTS

62.4950 Identification of plan—negative declaration.

METALS, ACID GASES, ORGANIC COMPOUNDS AND NITROGEN OXIDE EMISSIONS FROM EXISTING MUNICIPAL WASTE COMBUSTORS WITH THE CAPACITY TO COMBUST GREATER THAN 250 TONS PER DAY OF MUNICIPAL SOLID WASTE

62.4975 Identification of sources.

AIR EMISSIONS FROM EXISTING COMMERCIAL AND INDUSTRIAL SOLID WASTE INCINERATION UNITS

62.4980 Identification of Plan—negative declaration.

Subpart V—Maryland

PLAN FOR CONTROL OF DESIGNATED POLLUTANTS FROM EXISTING FACILITIES (SECTION 111(d) PLAN)

62.5100 Identification of plan.

SULFURIC ACID MIST FROM EXISTING SULFURIC ACID PLANTS

62.5101 Identification of sources.

TOTAL REDUCED SULFUR EMISSIONS FROM EXISTING KRAFT PULP MILLS

62.5102 Identification of sources.

FLUORIDE EMISSIONS FROM PRIMARY ALUMINUM REDUCTION PLANTS

62.5103 Identification of sources.

METALS, ACID GASES, ORGANIC COMPOUNDS AND NITROGEN OXIDE EMISSIONS FROM EXISTING MUNICIPAL WASTE COMBUSTORS WITH A UNIT CAPACITY GREATER THAN 250 TONS PER DAY

62.5110 Identification of plan.
62.5111 Identification of sources.
62.5112 Effective date.

LANDFILL GAS EMISSIONS FROM EXISTING MUNICIPAL SOLID WASTE LANDFILLS (SECTION 111(d) PLAN)

62.5150 Identification of plan.
62.5151 Identification of sources.
62.5152 Effective date.

EMISSIONS FROM EXISTING HOSPITAL/MEDICAL/INFECTIOUS WASTE INCINERATORS (HMIWIS)—SECTION 111(D)/129 PLAN

62.5160 Identification of plan.
62.5161 Identification of sources.
62.5162 Effective date.

Subpart W—Massachusetts

PLAN FOR THE CONTROL OF DESIGNATED POLLUTANTS FROM EXISTING FACILITIES (SECTION 111(D) PLAN)

62.5340 Identification of Plan.

FLUORIDE EMISSIONS FROM PHOSPHATE FERTILIZER PLANTS

62.5350 Identification of plan—negative declaration.

SULFURIC ACID MIST EMISSIONS FROM EXISTING SULFURIC ACID PLANTS

62.5351 Identification of plan—negative declaration.

TOTAL REDUCED SULFUR EMISSIONS FROM EXISTING KRAFT PULP MILS

62.5375 Identification of plan—negative declaration.

FLUORIDE EMISSIONS FROM EXISTING PRIMARY ALUMINUM PLANTS

62.5400 Identification of plan—negative declaration.

METALS, ACID GASES, ORGANIC COMPOUNDS AND NITROGEN OXIDE EMISSIONS FROM EXISTING MUNICIPAL WASTE COMBUSTORS WITH THE CAPACITY TO COMBUST GREATER THAN 250 TONS PER DAY OF MUNICIPAL SOLID WASTE

62.5425 Identification of sources.

Subpart X—Michigan

FLUORIDE EMISSIONS FROM PHOSPHATE FERTILIZER PLANTS

62.5600 Identification of plan—negative declaration.

Subpart Y—Minnesota

FLUORIDE EMISSIONS FROM PHOSPHATE FERTILIZER PLANTS

62.5850 Identification of plan—negative declaration.

LANDFILL GAS EMISSIONS FROM EXISTING MUNICIPAL SOLID WASTE LANDFILLS

62.5860 Identification of plan.
62.5861 Identification of sources.
62.5862 Effective date.

EXISTING LARGE MUNICIPAL WASTE COMBUSTORS

62.5870 Identification of plan.
62.5871 Identification of sources.
62.5872 Effective date.

Subpart Z—Mississippi

PLAN FOR THE CONTROL OF DESIGNATED POLLUTANTS FROM EXISTING FACILITIES (SECTION 111(d) PLAN)

62.6100 Identification of plan.

SULFURIC ACID MIST FROM EXISTING SULFURIC ACID PLANTS

62.6110 Identification of sources.

FLUORIDE EMISSIONS FROM PHOSPHATE FERTILIZER PLANTS

62.6120 Identification of sources.

FLUORIDE EMISSIONS FROM PRIMARY ALUMINUM REDUCTION PLANTS

62.6121 Identification of sources—negative declaration.

TOTAL REDUCED SULFUR EMISSIONS FROM KRAFT PULP MILLS

62.6122 Identification of sources.

MUNICIPAL WASTE COMBUSTORS

62.6123 Identification of sources—negative declaration.

AIR EMISSIONS FROM HOSPITAL/MEDICAL/INFECTIOUS WASTE INCINERATORS

62.6124 Identification of sources.
62.6125 Identification of plan—negative declaration.

AIR EMISSIONS FROM SMALL EXISTING MUNICIPAL WASTE COMBUSTION UNITS

62.6126 Identification of plan—negative declaration.

AIR EMISSIONS FROM COMMERCIAL AND INDUSTRIAL SOLID WASTE INCINERATION (CISWI) UNITS—SECTION 111(D)/129 PLAN

62.6127 Identification of Sources.

Subpart AA—Missouri

PLAN FOR THE CONTROL OF DESIGNATED POLLUTANTS FROM EXISTING FACILITIES (SECTION 111(d) PLAN)

62.6350 Identification of plan.

FLUORIDE EMISSIONS FROM EXISTING PHOSPHATE FERTILIZER PLANTS

62.6351 Identification of sources.

FLUORIDE EMISSIONS FROM EXISTING PRIMARY ALUMINUM REDUCTION PLANTS

62.6352 Identification of sources.

SULFURIC ACID MIST FROM EXISTING SULFURIC ACID PRODUCTION PLANTS

62.6353 Identification of sources.

TOTAL REDUCED SULFUR EMISSIONS FROM EXISTING KRAFT PULP MILLS

62.6354 Identification of plan—negative declaration.

EMISSIONS FROM EXISTING MUNICIPAL WASTE COMBUSTORS WITH THE CAPACITY TO BURN GREATER THAN 250 TONS PER DAY OF MUNICIPAL SOLID WASTE

62.6355 Identification of plan—negative declaration.

EMISSIONS FROM EXISTING MUNICIPAL WASTE COMBUSTORS WITH THE CAPACITY TO BURN GREATER THAN 35 MEGAGRAMS PER DAY OF MUNICIPAL SOLID WASTE

62.6356 Identification of plan—negative declaration.

AIR EMISSIONS FROM EXISTING MUNICIPAL SOLID WASTE LANDFILLS

62.6357 Identification of plan.

AIR EMISSIONS FROM EXISTING HOSPITAL/MEDICAL/INFECTIOUS WASTE INCINERATORS

62.6358 Identification of plan.

AIR EMISSIONS FROM SMALL EXISTING MUNICIPAL WASTE COMBUSTION UNITS

62.6359 Identification of plan—negative declaration.

AIR EMISSIONS FROM EXISTING COMMERCIAL AND INDUSTRIAL SOLID WASTE INCINERATION UNITS

62.6360 Identification of plan—negative declaration.

Subpart BB—Montana

LANDFILL GAS EMISSIONS FROM EXISTING MUNICIPAL SOLID WASTE LANDFILLS

62.6600 Identification of plan.
62.6601 Identification of sources.
62.6602 Effective date.

AIR EMISSIONS FROM HOSPITAL/MEDICAL/INFECTIOUS WASTE INCINERATORS

62.6610 Identification of plan.
62.6611 Identification of sources.
62.6612 Effective date.

FLUORIDE EMISSIONS FROM EXISTING PHOSPHATE FERTILIZER PLANTS

62.6613 Identification of plan—negative declaration.

EMISSIONS FROM EXISTING MUNICIPAL WASTE COMBUSTORS WITH THE CAPACITY TO BURN GREATER THAN 250 TONS PER DAY OF MUNICIPAL SOLID WASTE

62.6620 Identification of plan—negative declaration.

Subpart CC—Nebraska

FLUORIDE EMISSIONS FROM EXISTING PHOSPHATE FERTILIZER PLANTS

62.6850 Identification of plan—negative declaration.

SULFURIC ACID MIST EMISSIONS FROM EXISTING SULFURIC ACID PLANTS

62.6875 Identification plan—negative declaration.

TOTAL REDUCED SULFUR EMISSIONS FROM EXISTING KRAFT PULP MILLS

62.6880 Identification of plan—negative declaration.

FLUORIDE EMISSIONS FROM EXISTING PRIMARY ALUMINUM REDUCTION PLANTS

62.6910 Identification of plan—negative declaration.

EMISSIONS FROM EXISTING MUNICIPAL WASTE COMBUSTORS WITH THE CAPACITY TO BURN GREATER THAN 250 TONS PER DAY OF MUNICIPAL SOLID WASTE

62.6911 Identification of plan—negative declaration.

EMISSIONS FROM EXISTING MUNICIPAL WASTE COMBUSTORS WITH THE CAPACITY TO BURN GREATER THAN 35 MEGAGRAMS PER DAY OF MUNICIPAL SOLID WASTE

62.6912 Identification of plan—negative declaration.

AIR EMISSIONS FROM EXISTING MUNICIPAL SOLID WASTE LANDFILLS

62.6913 Identification of plan.

AIR EMISSIONS FROM EXISTING HOSPITAL/MEDICAL/INFECTIOUS WASTE INCINERATORS

62.6914 Identification of plan.

AIR EMISSIONS FROM SMALL EXISTING MUNICIPAL WASTE COMBUSTION UNITS

62.6915 Identification of plan—negative declaration.

AIR EMISSIONS FROM EXISTING COMMERCIAL AND INDUSTRIAL SOLID WASTE INCINERATION UNITS

62.6916 Identification of plan—negative declaration.

Subpart DD—Nevada

LANDFILL GAS EMISSIONS FROM EXISTING MUNICIPAL SOLID WASTE LANDFILL

62.7100 Identification of plan.
62.7101 Identification of sources.
62.7102 Effective date.

EMISSIONS FROM EXISTING MUNICIPAL WASTE COMBUSTORS WITH THE CAPACITY TO BURN GREATER THAN 250 TONS PER DAY OF MUNICIPAL SOLID WASTE

62.7120 Identification of plan—negative declaration.

EMISSIONS FROM SMALL EXISTING MUNICIPAL WASTE COMBUSTION UNITS

62.7125 Identification of plan—negative declaration.

Subpart EE—New Hampshire

PLAN FOR THE CONTROL OF DESIGNATED POLLUTANTS FROM EXISTING FACILITIES (SECTION 111(d) PLAN)

62.7325 Identification of plan.

FLUORIDE EMISSIONS FROM PHOSPHATE FERTILIZER PLANTS

62.7350 Identification of plan—negative declaration.

SULFURIC ACID MIST EMISSIONS FROM SULFURIC ACID PRODUCTION UNITS

62.7375 Identification of plan—negative declaration.

FLUORIDE EMISSIONS FROM EXISTING PRIMARY ALUMINUM PLANTS

62.7400 Identification of sources—negative declaration.

EMISSIONS FROM EXISTING MUNICIPAL SOLID WASTE LANDFILLS

62.7405 Identification of plan-negative declaration.

TOTAL REDUCED SULFUR FROM EXISTING KRAFT PULP MILLS

62.7425 Identification of sources.

AIR EMISSIONS FROM EXISTING HOSPITAL/MEDICAL/INFECTIOUS WASTE INCINERATORS

62.7450 Identification of sources.

AIR EMISSIONS FROM EXISTING COMMERCIAL AND INDUSTRIAL SOLID WASTE INCINERATION UNITS

62.7455 Identification of sources.

AIR EMISSIONS FROM EXISTING LARGE AND SMALL MUNICIPAL WASTE COMBUSTORS

62.7460 Identification of sources.

Subpart FF—New Jersey

FLUORIDE EMISSIONS FROM PHOSPHATE FERTILIZER PLANTS

62.7600 Identification of plan—negative declaration.

TOTAL REDUCED SULFUR EMISSIONS FROM KRAFT PULP MILLS

62.7601 Identification of plan—negative declaration.

FLUORIDE EMISSIONS FROM PRIMARY ALUMINUM REDUCTION PLANTS

62.7602 Identification of plan—negative declaration.

METALS, ACID GASES, ORGANIC COMPOUNDS AND NITROGEN OXIDE EMISSIONS FROM EXISTING LARGE MUNICIPAL WASTE COMBUSTORS WITH THE CAPACITY TO COMBUST GREATER THAN 250 TONS PER DAY OF MUNICIPAL SOLID WASTE

62.7603 Identification of plan-delegation of authority.

Subpart GG—New Mexico

62.7850 Identification of plan.

SULFURIC ACID MIST EMISSIONS FROM SULFURIC ACID PLANTS

62.7851 Identification of sources.

FLUORIDE EMISSIONS FROM PRIMARY ALUMINUM PLANTS

62.7852 Identification of plan—negative declaration.

TOTAL REDUCED SULFUR EMISSIONS FROM KRAFT PULP MILLS

62.7853 Identification of plan—negative declaration.

FLUORIDE EMISSIONS FROM PHOSPHATE FERTILIZER PLANTS

62.7854 Identification of plan—negative declaration

LANDFILL GAS EMISSIONS FROM EXISTING MUNICIPAL SOILD WASTE LANDFILLS

62.7855 Identification of plan.
62.7856 Identification of sources.

EMISSIONS FROM EXISTING MUNICIPAL WASTE COMBUSTORS WITH THE CAPACITY TO BURN GREATER THAN 250 TONS PER DAY OF MUNICIPAL SOLID WASTE

62.7857 Identification of plan—negative declaration.

EMISSIONS FROM EXISTING LARGE MUNICIPAL WASTE COMBUSTION UNITS

62.7860 Identification of sources—negative declaration.

EMISSIONS FROM EXISTING HOSPITAL/MEDICAL/INFECTIOUS WASTES INCINERATORS

62.7870 Identification of sources—negative declaration.

EMISSIONS FROM EXISTING SMALL MUNICIPAL WASTE COMBUSTION UNITS

62.7880 Identification of sources—negative declaration.

EMISSIONS FROM EXISTING COMMERCIAL AND INDUSTRIAL SOLID WASTE INCINERATION (CISWI) UNITS

62.7890 Identification of sources—negative declaration.

Subpart HH—New York

FLUORIDE EMISSIONS FROM PHOSPHATE FERTILIZER PLANTS

62.8100 Identification of plan—negative declaration.

SULFURIC ACID MIST EMISSIONS FROM EXISTING SULFURIC ACID PLANTS

62.8102 Identification of plan.

METALS, ACID GASES, ORGANIC COMPOUNDS AND NITROGEN OXIDE EMISSIONS FROM EXISTING MUNICIPAL WASTE COMBUSTORS WITH THE CAPACITY TO COMBUST GREATER THAN 250 TONS PER DAY OF MUNICIPAL SOLID WASTE

62.8103 Identification of plan.

LANDFILL GAS EMISSIONS FROM EXISTING MUNICIPAL SOLID WASTE LANDFILLS

62.8104 Identification of plan.

METALS, ACID GASES, ORGANIC COMPOUNDS, PARTICULATES AND NITROGEN OXIDE EMISSIONS FROM EXISTING HOSPITAL/MEDICAL/INFECTIOUS WASTE INCINERATORS

62.8105 Identification of plan.

AIR EMISSIONS FROM EXISTING COMMERCIAL AND INDUSTRIAL SOLID WASTE INCINERATOR UNITS

62.8106 Identification of plan—negative declaration.

AIR EMISSIONS FROM EXISTING SMALL MUNICIPAL WASTE COMBUSTION UNITS WITH THE CAPACITY TO COMBUST AT LEAST 35 TONS PER DAY BUT NO MORE THAN 250 TONS PER DAY OF MUNICIPAL SOLID WASTE OR REFUSE DERIVED FUEL AND CONSTRUCTED ON OR BEFORE AUGUST 30, 1999

62.8107 Identification of plan.

Subpart II—North Carolina

PLAN FOR THE CONTROL OF DESIGNATED POLLUTANTS FROM EXISTING FACILITIES (SECTION 111(d) PLAN)

62.8350 Identification of plan.

SULFURIC ACID MIST FROM EXISTING SULFURIC ACID PLANTS

62.8351 Identification of sources.

FLUORIDE EMISSIONS FROM EXISTING PRIMARY ALUMINUM PLANTS

62.8352 Identification of sources.

TOTAL REDUCED SULFUR EMISSIONS FROM KRAFT PULP MILLS

62.8353 Identification of sources.

Subpart JJ—North Dakota

LANDFILL GAS EMISSIONS FROM EXISTING MUNICIPAL SOLID WASTE LANDFILLS

62.8600 Identification of plan.
62.8601 Identification of sources.
62.8602 Effective date.

AIR EMISSIONS FROM HOSPITAL/MEDICAL/INFECTIOUS WASTE INCINERATORS

62.8610 Identification of plan.
62.8611 Identification of sources.
62.8612 Effective date.

EMISSIONS FROM EXISTING MUNICIPAL WASTE COMBUSTORS WITH THE CAPACITY TO BURN GREATER THAN 250 TONS PER DAY OF MUNICIPAL SOLID WASTE

62.8620 Identification of plan—negative declaration.

Subpart KK—Ohio

FLUORIDE EMISSIONS FROM PHOSPHATE FERTILIZER PLANTS

62.8850 Identification of plan—negative declaration.

EMISSIONS FROM SMALL MUNICIPAL WASTE COMBUSTION UNITS WITH THE CAPACITY TO COMBUST AT LEAST 35 TONS PER DAY OF MUNICIPAL SOLID WASTE BUT NO MORE THAN 250 TONS PER DAY OF MUNICIPAL SOLID WASTE AND COMMENCED CONSTRUCTION ON OR BEFORE AUGUST 30, 1999

62.8855 Identification of plan—negative declaration.

TOTAL REDUCED SULFUR EMISSIONS FROM KRAFT PULP MILLS

62.8860 Identification of plan—disapproval.

LANDFILL GAS EMISSIONS FROM EXISTING MUNICIPAL SOLID WASTE LANDFILLS

62.8870 Identification of plan.
62.8871 Identification of sources.
62.8872 Effective date.

Subpart LL—Oklahoma

PLAN FOR THE CONTROL OF DESIGNATED POLLUTANTS FROM EXISTING FACILITIES (SECTION 111(d) PLAN)

62.9100 Identification of plan.

SULFURIC ACID MIST FROM EXISTING SULFURIC ACID PLANTS

62.9110 Identification of sources.

FLUORIDE EMISSIONS FROM PHOSPHATE FERTILIZER PLANTS

62.9120 Identification of plan—negative declaration.

FLUORIDE EMISSIONS FROM PRIMARY ALUMINUM PLANTS

62.9130 Identification of plan—negative declaration.

TOTAL REDUCED SULFUR FROM EXISTING KRAFT PULP MILLS

62.9140 Identification of source.

METALS, ACID GASES, ORGANIC COMPOUNDS AND NITROGEN OXIDE EMISSIONS FROM EXISTING MUNICIPAL WASTE COMBUSTORS WITH THE CAPACITY TO COMBUST GREATER THAN 250 TONS PER DAY OF MUNICIPAL SOLID WASTE

62.9150 Identification of sources.

LANDFILL GAS EMISSIONS FROM EXISTING MUNICIPAL SOLID WASTE LANDFILLS

62.9160 Identification of sources.

AIR EMISSIONS FROM HAZARDOUS/MEDICAL/INFECTIOUS WASTE INCINERATORS

62.9170 Identification of sources.

EFFECTIVE DATE

62.9171 Effective date.

EMISSIONS FROM EXISTING SMALL MUNICIPAL WASTE COMBUSTION UNITS

62.9180 Identification of sources—negative declaration.

Subpart MM—Oregon

PLAN FOR THE CONTROL OF DESIGNATED POLLUTANTS FROM EXISTING FACILITIES (SECTION 111(d))

62.9350 Identification of plan.

FLUORIDE EMISSIONS FROM PRIMARY ALUMINUM REDUCTION PLANTS

62.9360 Identification of sources.

FLUORIDE EMISSIONS FROM PHOSPHATE FERTILIZER PLANTS

62.9500 Identification of sources.

SULFURIC ACID MIST EMISSIONS FROM SULFURIC ACID PRODUCTION UNITS

62.9501 Identification of sources.

METALS, ACID GASES, ORGANIC COMPOUNDS AND NITROGEN OXIDE EMISSIONS FROM EXISTING MUNICIPAL WASTE COMBUSTORS WITH THE CAPACITY TO COMBUST GREATER THAN 250 TONS PER DAY OF MUNICIPAL SOLID WASTES.

62.9505 Identification of sources.

CONTROL OF LANDFILL GAS EMISSIONS FROM EXISTING MUNICIPAL SOLID WASTE LANDFILLS

62.9510 Identification of sources.

METALS, ACID GASES, ORGANIC COMPOUNDS, PARTICULATES AND NITROGEN OXIDE EMISSIONS FROM EXISTING HOSPITAL/MEDICAL/INFECTIOUS WASTE INCINERATORS

62.9515 Identification of sources—Negative declaration.

Subpart NN—Pennsylvania

FLUORIDE EMISSIONS FROM PHOSPHATE FERTILIZER PLANTS

62.9600 Identification of plan—negative declaration.

SULFURIC ACID MIST EMISSIONS FROM EXISTING SULFURIC ACID PLANTS

62.9601 Identification of plan.

TOTAL REDUCED SULFUR EMISSIONS FROM EXISTING KRAFT PULP MILLS

62.9610 Identification of plan—negative declaration.
62.9611 Identification of plan—Pennsylvania.

FLUORIDE EMISSIONS FROM EXISTING PRIMARY ALUMINUM PLANTS

62.9620 Identification of plan—negative declaration.

LANDFILL GAS EMISSIONS FROM EXISTING MUNICIPAL SOLID WASTE LANDFILLS (SECTION 111(d) PLAN)

62.9630 Identification of plan.
62.9631 Identification of sources.
62.9632 Effective date.
62.9633 Identification of plan—negative declaration.
62.9635 Identification of plan.
62.9636 Identification of sources.
62.9637 Effective date.

METALS, ACID GASES, ORGANIC COMPOUNDS AND NITROGEN OXIDE EMISSIONS FROM EXISTING MUNICIPAL WASTE COMBUSTORS WITH A UNIT CAPACITY GREATER THAN 250 TONS PER DAY

62.9640 Identification of plan.

62.9641 Identification of sources.
62.9642 Effective dates.

EMISSIONS FROM EXISTING MUNICIPAL WASTE COMBUSTORS WITH THE CAPACITY TO BURN GREATER THAN 250 TONS PER DAY OF MUNICIPAL SOLID WASTE

62.9643 Identification of plan—negative declaration.
62.9644 Identification of plan—negative declaration.

EMISSIONS FROM EXISTING SMALL MUNICIPAL WASTE COMBUSTION UNITS

62.9645 Identification of plan—negative declaration.
62.9646 Identification of plan—negative declaration.

EMISSIONS FROM EXISTING HOSPITAL/MEDICAL/INFECTIOUS WASTE INCINERATORS (HMIWIS)—SECTION 111(D)/129 PLANS

62.9650 Identification of plan.
62.9651 Identification of sources.
62.9652 Effective date.

EMISSIONS FROM EXISTING HOSPITAL/MEDICAL/INFECTIOUS WASTE INCINERATORS (HMIWIS)—SECTION 111(d)/129 PLAN

62.9660 Identification of plan.
62.9661 Identification of sources.
62.9662 Effective date.

EMISSIONS FROM EXISTING COMMERCIAL/INDUSTRIAL SOLID WASTE INCINERATION UNITS

62.9670 Identification of plan—negative declaration.

Subpart OO—Rhode Island

62.9825 Identification of plan.

FLOURIDE EMISSIONS FROM PHOSPHATE FERTILIZER PLANTS

62.9850 Identification of plan—negative declaration.

SULFURIC ACID MIST EMISSIONS FROM SULFURIC ACID PRODUCTION UNITS

62.9875 Identification of plan—negative declaration.

TOTAL REDUCED SULFUR EMISSIONS FROM EXISTING KRAFT PULP MILLS

62.9900 Identification of plan—negative declaration.

FLUORIDE EMISSIONS FROM EXISTING PRIMARY ALUMINUM PLANTS

62.9950 Identification of plan—negative declaration.

AIR EMISSIONS FROM EXISTING COMMERCIAL AND INDUSTRIAL SOLID WASTE INCINERATION UNITS

62.9970 Identification of plan—negative declaration.

MUNICIPAL WASTE COMBUSTOR EMISSIONS FROM EXISTING MUNICIPAL WASTE COMBUSTORS WITH THE CAPACITY TO COMBUST GREATER THAN 250 TONS PER DAY OF MUNICIPAL SOLID WASTE

62.9975 Identification of plan—negative declaration.

AIR EMISSIONS FROM EXISTING MUNICIPAL WASTE COMBUSTORS WITH THE CAPACITY TO COMBUST AT LEAST 35 TONS PER DAY BUT NO MORE THAN 250 TONS PER DAY OF MUNICIPAL SOLID WASTE

62.9980 Identification of plan—negative declaration.

EMISSIONS FROM EXISTING MUNICIPAL SOLID WASTE LANDFILLS

62.9985 Identification of plan-negative declaration.

AIR EMISSIONS FROM EXISTING HOSPITAL/MEDICAL/INFECTIOUS WASTE INCINERATORS

62.9990 Identification of sources.

Subpart PP—South Carolina

PLAN FOR THE CONTROL OF DESIGNATED POLLUTANTS FROM EXISTING FACILITIES (SECTION 111(d) PLAN)

62.10100 Identification of plan.

SULFURIC ACID MIST FROM SULFURIC ACID PLANTS

62.10110 Identification of sources.

TOTAL REDUCED SULFUR EMISSIONS FROM KRAFT PULP MILLS

62.10120 Identification of sources.

FLUORIDE EMISSIONS FROM PHOSPHATE FERTILIZER PLANTS

62.10130 Identification of plan—negative declaration.

FLUORIDE EMISSIONS FROM EXISTING PRIMARY ALUMINUM REDUCTION PLANTS

62.10140 Identification of plan—negative declaration.

METALS, ACID GASES, ORGANIC COMPOUNDS AND NITROGEN OXIDE EMISSIONS FROM EXISTING MUNICIPAL WASTE COMBUSTORS WITH THE CAPACITY TO COMBUST GREATER THAN 250 TONS PER DAY OF MUNICIPAL SOLID WASTE

62.10150 Identification of sources.

LANDFILL GAS EMISSIONS FROM EXISTING MUNICIPAL SOLID WASTE LANDFILLS

62.10160 Identification of sources.

AIR EMISSIONS FROM HOSPITAL/MEDICAL/INFECTIOUS WASTE INCINERATORS

62.10170 Identification of sources.

AIR EMISSIONS FROM SMALL EXISTING MUNICIPAL WASTE COMBUSTION UNITS

62.10180 Identification of plan—negative declaration.

Subpart QQ—South Dakota

LANDFILL GAS EMISSIONS FROM EXISTING MUNICIPAL SOLID WASTE LANDFILLS

62.10350 Identification of plan.
62.10351 Identification of sources.
62.10352 Effective date.

AIR EMISSIONS FROM HOSPITAL/MEDICAL/INFECTIOUS WASTE INCINERATORS

62.10360 Identification of plan.
62.10361 Identification of sources.
62.10362 Effective date.

EMISSIONS FROM EXISTING MUNICIPAL WASTE COMBUSTORS WITH THE CAPACITY TO BURN GREATER THAN 250 TONS PER DAY OF MUNICIPAL SOLID WASTE

62.10370 Identification of plan—negative declaration.

Subpart RR—Tennessee

FLUORIDE EMISSIONS FROM PHOSPHATE FERTILIZER PLANTS

62.10602 Identification of sources—negative declaration.

TOTAL REDUCED SULFUR EMISSIONS FROM EXISTING KRAFT PULP MILLS

62.10625 Identification of plan.

PLAN FOR THE CONTROL OF DESIGNATED POLLUTANTS FROM EXISTING FACILITIES (SECTION 111(d) PLAN)

62.10626 Identification of plan.

METALS, ACID GASES, ORGANIC COMPOUNDS AND NITROGEN OXIDE EMISSIONS FROM EXISTING MUNICIPAL WASTE COMBUSTORS WITH THE CAPACITY TO COMBUST GREATER THAN 250 TONS PER DAY OF MUNICIPAL SOLID WASTE

62.10627 Identification of sources.

LANDFILL GAS EMISSIONS FROM EXISTING MUNICIPAL SOLID WASTE LANDFILLS

62.10628 Identification of sources.

Subpart SS—Texas

PLAN FOR THE CONTROL OF DESIGNATED POLLUTANTS FROM EXISTING FACILITIES (SECTION 111(d) PLAN)

62.10850 Identification of plan.

SULFURIC ACID MIST FROM EXISTING SULFURIC ACID PLANTS

62.10860 Identification of sources.

TOTAL REDUCED SULFUR FROM EXISTING KRAFT PULP MILLS

62.10870 Identification of sources.

LANDFILL GAS EMISSIONS FROM EXISTING MUNICIPAL SOLID WASTE LANDFILLS

62.10880 Identification of sources.

EMISSIONS FROM EXISTING MUNICIPAL WASTE COMBUSTORS WITH THE CAPACITY TO BURN GREATER THAN 250 TONS PER DAY OF MUNICIPAL SOLID WASTE

62.10890 Identification of plan—negative declaration.

AIR EMISSIONS FROM HOSPITAL/MEDICAL/INFECTIOUS WASTES INCINERATORS

62.10910 Identification of sources.
62.10911 Effective date.

Subpart TT—Utah

FLUORIDE EMISSIONS FROM EXISTING PHOSPHATE FERTILIZER PLANTS

62.11100 Identification of plan–negative declaration.

LANDFILL GAS EMISSIONS FROM EXISTING MUNICIPAL SOLID WASTE LANDFILLS

62.11110 Identification of plan.
62.11111 Identification of sources.
62.11112 Effective date.

AIR EMISSIONS FROM HOSPITAL/MEDICAL/INFECTIOUS WASTE INCINERATORS

62.11120 Identification of plan.
62.11121 Identification of sources.
62.11122 Effective date.

EMISSIONS FROM EXISTING MUNICIPAL WASTE COMBUSTORS WITH THE CAPACITY TO BURN GREATER THAN 250 TONS PER DAY OF MUNICIPAL SOLID WASTE

62.11130 Identification of plan—negative declaration.

Subpart UU—Vermont

FLUORIDE EMISSIONS FROM PHOSPHATE FERTILIZER PLANTS

62.11350 Identification of plan—negative declaration.

SULFURIC ACID MIST EMISSIONS FROM SULFURIC ACID PRODUCTION UNITS

62.11375 Identification of plan—negative declaration.

TOTAL REDUCED SULFUR EMISSIONS FROM EXISTING KRAFT PULP MILLS

62.11400 Identification of plan—negative declaration.

FLUORIDE EMISSIONS FROM EXISTING PRIMARY ALUMINUM PLANTS

62.11425 Identification of plan—negative declaration.

MUNICIPAL WASTE COMBUSTOR EMISSIONS FROM EXISTING MUNICIPAL WASTE COMBUSTORS WITH THE CAPACITY TO COMBUST GREATER THAN 250 TONS PER DAY OF MUNICIPAL SOLID WASTE

62.11450 Identification of plan—negative declaration.

MUNICIPAL WASTE COMBUSTOR EMISSIONS FROM EXISTING SMALL MUNICIPAL WASTE COMBUSTORS WITH THE CAPACITY TO COMBUST BETWEEN 35 AND 250 TONS PER DAY OF MUNICIPAL SOLID WASTE

62.11460 Identification of Plan-negative declaration.

AIR EMISSIONS FROM EXISTING HOSPITAL/MEDICAL/INFECTIOUS WASTE INCINERATORS

62.11475 Identification of Plan—negative declaration.

Subpart UU—Vermont

AIR EMISSIONS FROM EXISTING COMMERCIAL AND INDUSTRIAL SOLID WASTE INCINERATION UNITS

62.11480 Identification of Plan-negative declaration.

EMISSION FROM EXISTING MUNICIPAL SOLID WASTE LANDFILLS

62.11485 Identification of Plan—negative declaration.

Subpart VV—Virginia

FLUORIDE EMISSIONS FROM PHOSPHATE FERTILIZER PLANTS

62.11600 Identification of plan—negative declaration.

SULFURIC ACID MIST EMISSIONS FROM EXISTING SULFURIC ACID PLANTS

62.11601 Identification of plan.

TOTAL REDUCED SULFUR EMISSIONS FROM EXISTING KRAFT PULP MILLS

62.11610 Identification of plan.

62.11611–62.11619 [Reserved—plan not submitted]

FLUORIDE EMISSIONS FROM EXISTING PRIMARY ALUMINUM PLANTS

62.11620 Identification of plan—negative declaration.

Subpart WW—Washington

FLUORIDE EMISSIONS FROM PHOSPHATE FERTILIZER PLANTS

62.11850 Identification of plan—negative declaration.

PLANS FOR THE CONTROL OF DESIGNATED POLLUTANTS FROM EXISTING FACILITIES (SECTION 111(d) PLAN)

62.11860 Identification of plan.

METALS, ACID GASES, ORGANIC COMPOUNDS AND NITROGEN OXIDE EMISSIONS FROM EXISTING MUNICIPAL WASTE COMBUSTORS WITH THE CAPACITY TO COMBUST GREATER THAN 250 TONS PER DAY OF MUNICIPAL SOLID WASTE

62.11870 Identification of sources.

Subpart XX—West Virginia

FLUORIDE EMISSIONS FROM PHOSPHATE FERTILIZER PLANTS

62.12100 Identification of plan—negative declaration.

EMISSIONS FROM EXISTING MUNICIPAL WASTE COMBUSTORS WITH THE CAPACITY TO BURN GREATER THAN 250 TONS PER DAY OF MUNICIPAL SOLID WASTE

62.12110 Identification of plan—negative declaration.

LANDFILL GAS EMISSIONS FROM EXISTING MUNICIPAL SOLID WASTE LANDFILLS (SECTION 111(d)) PLAN

62.12125 Identification of plan.
62.12126 Identification of sources.
62.12127 Effective date.

EMISSIONS FROM EXISTING HOSPITAL/MEDICAL/INFECTIOUS WASTE INCINERATORS (HMIWIS)—SECTION 111(d)/129 PLAN

62.12150 Identification of plan.
62.12151 Identification of sources.
62.12152 Effective date.

EMISSIONS FROM EXISTING COMMERCIAL INDUSTRIAL SOLID WASTE INCINERATORS (CISWI) UNITS—SECTION 111(D)/129 PLANS

62.12155 Identification of plan.
62.12156 Identification of sources.
62.12157 Effective date.

EMISSIONS FROM EXISTING SMALL MUNICIPAL WASTE COMBUSTION UNITS

62.12160 Identification of plan—negative declaration.

Subpart YY—Wisconsin

FLUORIDE EMISSIONS FROM PHOSPHATE FERTILIZER PLANTS

62.12350 Identification of plan—negative declaration.

EMISSIONS FROM EXISTING MUNICIPAL WASTE COMBUSTORS WITH THE CAPACITY TO BURN GREATER THAN 250 TONS PER DAY OF MUNICIPAL SOLID WASTE

62.12360 Identification of plan—negative declaration.

Subpart ZZ–Wyoming

LANDFILL GAS EMISSIONS FROM EXISTING MUNICIPAL SOLID WASTE LANDFILLS

62.12600 Identification of plan.
62.12601 Identification of sources.
62.12602 Effective date.

AIR EMISSIONS FROM HOSPITAL/MEDICAL/INFECTIOUS WASTE INCINERATORS

62.12610 Identification of plan.
62.12611 Identification of sources.
62.12612 Effective date.

EMISSIONS FROM EXISTING MUNICIPAL WASTE COMBUSTORS WITH THE CAPACITY TO BURN GREATER THAN 250 TONS PER DAY OF MUNICIPAL SOLID WASTE

62.12620 Identification of plan—negative declaration.

Subpart AAA [Reserved]

Subpart BBB—Puerto Rico

FLUORIDE EMISSIONS FROM PHOSPHATE FERTILIZER PLANTS

62.13100 Identification of plan—negative declaration.

SULFURIC ACID MIST EMISSIONS FROM SULFURIC ACID PRODUCTION PLANTS

62.13101 Identification of plan—negative declaration.

FLUORIDE EMISSIONS FROM PRIMARY ALUMINUM REDUCTION PLANTS

62.13102 Identification of plan—negative declaration.

TOTAL REDUCED SULFUR FROM KRAFT PULP MILLS

62.13103 Identification of plan—negative declaration.

EMISSIONS FROM EXISTING MUNICIPAL WASTE COMBUSTORS WITH THE CAPACITY TO BURN GREATER THAN 250 TONS PER DAY OF MUNICIPAL SOLID WASTE

62.13104 Identification of plan—negative declaration.

AIR EMISSIONS FROM EXISTING SMALL MUNICIPAL WASTE COMBUSTION UNITS WITH THE CAPACITY TO COMBUST AT LEAST 35 TONS PER DAY BUT NO MORE THAN 250 TONS PER DAY OF MUNICIPAL SOLID WASTE OR REFUSE DERIVED FUEL AND CONSTRUCTED ON OR BEFORE AUGUST 30, 1999

62.13105 Identification of plan—negative declaration.

CONTROL OF AIR EMISSIONS OF DESIGNATED POLLUTANTS FROM EXISTING HOSPITAL, MEDICAL, AND INFECTIOUS WASTE INCINERATORS

62.13106 Identification of plan.

LANDFILL GAS EMISSIONS FROM EXISTING MUNICIPAL SOLID WASTE LANDFILLS (SECTION 111(D) PLAN)

62.13107 Identification of plan.

Subpart CCC—Virgin Islands

FLUORIDE EMISSIONS FROM PHOSPHATE FERTILIZER PLANTS

62.13350 Identification of plan—negative declaration.

SULFURIC ACID MIST EMISSIONS FROM SULFURIC ACID PRODUCTION PLANTS

62.13351 Identification of plan—negative declaration.

TOTAL REDUCED SULFUR EMISSIONS FROM KRAFT PULP MILLS

62.13352 Identification of plan—negative declaration.

FLUORIDE EMISSIONS FROM PRIMARY ALUMINUM REDUCTION PLANTS

62.13353 Identification of plant—negative declaration.

EMISSIONS FROM EXISTING MUNICIPAL WASTE COMBUSTORS WITH THE CAPACITY TO BURN GREATER THAN 250 TONS PER DAY OF MUNICIPAL SOLID WASTE

62.13354 Identification of plan—negative declaration.

AIR EMISSIONS FROM EXISTING SMALL MUNICIPAL WASTE COMBUSTION UNITS WITH THE CAPACITY TO COMBUST AT LEAST 35 TONS PER DAY BUT NO MORE THAN 250 TONS PER DAY OF MUNICIPAL SOLID WASTE OR REFUSE DERIVED FUEL AND CONSTRUCTED ON OR BEFORE AUGUST 30, 1999

62.13355 Identification of plan—negative declaration.

AIR EMISSIONS FROM EXISTING COMMERCIAL AND INDUSTRIAL SOLID WASTE INCINERATION UNITS CONSTRUCTED ON OR BEFORE NOVEMBER 30, 1999 OR RECONSTRUCTED OR MODIFIED PRIOR TO JUNE 1, 2001

62.13356 Identification of plan—negative declaration.

Subparts DDD–EEE [Reserved]

Subpart FFF—Federal Plan Requirements For Large Municipal Waste Combustors Constructed On Or Before September 20, 1994

62.14100 Scope and delegation of authority.
62.14101 Definitions.
62.14102 Affected facilities.
62.14103 Emission limits for municipal waste combustor metals, acid gases, organics, and nitrogen oxides.
62.14104 Requirements for municipal waste combustor operating practices.
62.14105 Requirements for municipal waste combustor operating training and certification.
62.14106 Emission limits for municipal waste combustor fugitive ash emissions.
62.14107 Emission limits for air curtain incinerators.
62.14108 Compliance schedules.
62.14109 Reporting and recordkeeping, and compliance and performance testing.

TABLE 1 OF SUBPART FFF—UNITS EXCLUDED FROM SUBPART FFF
TABLE 2 OF SUBPART FFF—NITROGEN OXIDES REQUIREMENTS FOR AFFECTED FACILITIES
TABLE 3 OF SUBPART FFF—MUNICIPAL WASTE COMBUSTOR OPERATING REQUIREMENTS
TABLE 4 OF SUBPART FFF—GENERIC COMPLIANCE SCHEDULE AND INCREMENTS OF PROGRESS (PRE-1987 MWCS)
TABLE 5 OF SUBPART FFF—GENERIC COMPLIANCE SCHEDULES AND INCREMENTS OF PROGRESS (POST-1987 MWCS)
TABLE 6 OF SUBPART FFF—SITE-SPECIFIC COMPLIANCE SCHEDULES AND INCREMENTS OF PROGRESS

Subpart GGG—Federal Plan Requirements for Municipal Solid Waste Landfills That Commenced Construction Prior to May 30, 1991 and Have Not Been Modified or Reconstructed Since May 30, 1991

62.14350 Scope and delegation of authority.
62.14351 Definitions.
62.14352 Designated facilities.
62.14353 Standards for municipal solid waste landfill emissions.
62.14354 Procedures, test methods, and monitoring.
62.14355 Reporting and recordkeeping requirements.
62.14356 Compliance schedules and increments of progress.

TABLE 1 OF SUBPART GGG—STATES THAT HAVE AN APPROVED AND EFFECTIVE STATE PLAN
TABLE 2 OF SUBPART GGG—STATES THAT SUBMITTED A NEGATIVE DECLARATION LETTER
TABLE 3 OF SUBPART GGG—GENERIC COMPLIANCE SCHEDULE AND INCREMENTS OF PROGRESS
TABLE 4 OF SUBPART GGG—SITE-SPECIFIC COMPLIANCE SCHEDULES AND INCREMENTS OF PROGRESS [RESERVED]

Subpart HHH—Federal Plan Requirements for Hospital/ Medical/Infectious Waste Incinerators Constructed on or Before June 20, 1996

APPLICABILITY

62.14400 Am I subject to this subpart?
62.14401 How do I determine if my HMIWI is covered by an approved and effective State or Tribal plan?
62.14402 If my HMIWI is not listed on the Federal plan inventory, am I exempt from this subpart?
62.14403 What happens if I modify an existing HMIWI?

EMISSION LIMITS

62.14410 Are there different emission limits for different locations and sizes of HMIWI?
62.14411 What emission limits apply to my HMIWI?
62.14412 What stack opacity requirements apply?
62.14413 When do the emission limits and stack opacity requirements apply?

OPERATOR TRAINING AND QUALIFICATION

62.14420 Am I required to have a trained and qualified operator?
62.14421 How does an operator become trained and qualified?

62.14422 What are the requirements for a training course that is not part of a State-approved program?
62.14423 What are the qualification requirements for operators who do not participate in a State-approved program?
62.14424 What documentation must I maintain onsite?
62.14425 When must I review the documentation?

WASTE MANAGEMENT PLAN

62.14430 Must I prepare a waste management plan?
62.14431 What must my waste management plan include?
62.14432 When must my waste management plan be completed?

INSPECTION REQUIREMENTS

62.14440 Which HMIWI are subject to inspection requirements?
62.14441 When must I inspect my small rural HMIWI?
62.14442 What must my inspection include?
62.14443 When must I do repairs?

PERFORMANCE TESTING AND MONITORING REQUIREMENTS

62.14450 What are the testing requirements for small rural HMIWI?
62.14451 What are the testing requirements for HMIWI that are not small rural?
62.14452 What test methods and procedures must I use?
62.14453 What must I monitor?
62.14454 How must I monitor the required parameters?
62.14455 What if my HMIWI goes outside of a parameter limit?

REPORTING AND RECORDKEEPING REQUIREMENTS

62.14460 What records must I maintain?
62.14461 For how long must I maintain records?
62.14462 Where must I keep the records?
62.14463 What reporting requirements must I satisfy?
62.14464 When must I submit reports?
62.14465 Who must sign all submitted reports?

COMPLIANCE SCHEDULE

62.14470 When must I comply with this subpart if I plan to continue operation of my HMIWI?
62.14471 When must I comply with this subpart if I plan to shut down?
62.14472 When must I comply with this subpart if I plan to shut down and later restart?

PERMITTING OBLIGATION

62.14480 Does this subpart require me to obtain an operating permit under title V of the Clean Air Act and implementing regulations?
62.14481 When must I submit a title V permit application for my HMIWI?

DEFINITIONS

62.14490 Definitions.

DELEGATION OF AUTHORITY

62.14495 What authorities will be retained by the EPA Administrator?

TABLE 1 OF SUBPART HHH OF PART 62—EMISSION LIMITS FOR SMALL RURAL, SMALL, MEDIUM, AND LARGE HMIWI
TABLE 2 OF SUBPART HHH OF PART 62—TOXIC EQUIVALENCY FACTORS
TABLE 3 OF SUBPART HHH OF PART 62—OPERATING PARAMETERS TO BE MONITORED AND MINIMUM MEASUREMENT AND RECORDING FREQUENCIES

Subpart JJJ—Federal Plan Requirements for Small Municipal Waste Combustion Units Constructed on or Before August 30, 1999

INTRODUCTION

62.15000 What is the purpose of this subpart?
62.15005 What are the principal components of this subpart?

APPLICABILITY OF THIS SUBPART

62.15010 Is my municipal waste combustion unit covered by this subpart?
62.15015 Can my small municipal waste combustion unit be covered by both a State plan and this subpart?
62.15020 Can my small municipal waste combustion unit be exempt from this subpart?
62.15025 How do I determine if my small municipal waste combustion unit is covered by an approved and effective State or Tribal plan?
62.15030 What are my obligations under this subpart if I reduce my small municipal waste combustion unit's combustion capacity to less than 35 tons per day?
62.15035 Is my small municipal waste combustion unit subject to different requirements based on plant capacity?

COMPLIANCE SCHEDULE AND INCREMENTS OF PROGRESS

62.15040 What are the requirements for meeting increments of progress and achieving final compliance?
62.15045 When must I complete each increment of progress?
62.15050 What must I include in the notifications of achievement of my increments of progress?
62.15055 When must I submit the notifications of achievement of increments of progress?

62.15060 What if I do not meet an increment of progress?
62.15065 How do I comply with the increment of progress for submittal of a final control plan?
62.15070 How do I comply with the increment of progress for awarding contracts?
62.15075 How do I comply with the increment of progress for initiating onsite construction?
62.15080 How do I comply with the increment of progress for completing onsite construction?
62.15085 How do I comply with the increment of progress for achieving final compliance?
62.15090 What must I do if I close my municipal waste combustion unit and then restart my municipal waste combustion unit?
62.15095 What must I do if I plan to permanently close my municipal waste combustion unit and not restart it?

GOOD COMBUSTION PRACTICES: OPERATOR TRAINING

62.15100 What types of training must I do?
62.15105 Who must complete the operator training course? By when?
62.15110 Who must complete the plant-specific training course?
62.15115 What plant-specific training must I provide?
62.15120 What information must I include in the plant-specific operating manual?
62.15125 Where must I keep the plant-specific operating manual?

GOOD COMBUSTION PRACTICES: OPERATOR CERTIFICATION

62.15130 What types of operator certification must the chief facility operator and shift supervisor obtain and by when must they obtain it?
62.15135 After the required date for operator certification, who may operate the municipal waste combustion unit?
62.15140 What if all the certified operators must be temporarily offsite?

GOOD COMBUSTION PRACTICES: OPERATING REQUIREMENTS

62.15145 What are the operating practice requirements for my municipal waste combustion unit?
62.15150 What happens to the operating requirements during periods of startup, shutdown, and malfunction?

EMISSION LIMITS

62.15155 What pollutants are regulated by this subpart?
62.15160 What emission limits must I meet?
62.15165 What happens to the emission limits during periods of startup, shutdown, and malfunction?

CONTINUOUS EMISSION MONITORING

62.15170 What types of continuous emission monitoring must I perform?
62.15175 What continuous emission monitoring systems must I install for gaseous pollutants?
62.15180 How are the data from the continuous emission monitoring systems used?
62.15185 How do I make sure my continuous emission monitoring systems are operating correctly?
62.15190 Am I exempt from any 40 CFR part 60 appendix B or appendix F requirements to evaluate continuous emission monitoring systems?
62.15195 What is my schedule for evaluating continuous emission monitoring systems?
62.15200 What must I do if I choose to monitor carbon dioxide instead of oxygen as a diluent gas?
62.15205 What minimum amount of monitoring data must I collect with my continuous emission monitoring systems and is this requirement enforceable?
62.15210 How do I convert my 1-hour arithmetic averages into appropriate averaging times and units?
62.15215 What is required for my continuous opacity monitoring system and how are the data used?
62.15220 What additional requirements must I meet for the operation of my continuous emission monitoring systems and continuous opacity monitoring system?
62.15225 What must I do if my continuous emission monitoring system is temporarily unavailable to meet the data collection requirements?

STACK TESTING

62.15230 What types of stack tests must I conduct?
62.15235 How are the stack test data used?
62.15240 What schedule must I follow for the stack testing?
62.15245 What test methods must I use to stack test?
62.15250 May I conduct stack testing less often?
62.15255 May I deviate from the 13-month testing schedule if unforeseen circumstances arise?

OTHER MONITORING REQUIREMENTS

62.15260 What other requirements must I meet for continuous monitoring?
62.15265 How do I monitor the load of my municipal waste combustion unit?
62.15270 How do I monitor the temperature of flue gases at the inlet of my particulate matter control device?
62.15275 How do I monitor the injection rate of activated carbon?

62.15280 What minimum amount of monitoring data must I collect with my continuous parameter monitoring systems and is this requirement enforceable?

RECORDKEEPING

62.15285 What records must I keep?
62.15290 Where must I keep my records and for how long?
62.15295 What records must I keep for operator training and certification?
62.15300 What records must I keep for stack tests?
62.15305 What records must I keep for continuously monitored pollutants or parameters?
62.15310 What records must I keep for municipal waste combustion units that use activated carbon?

REPORTING

62.15315 What reports must I submit and in what form?
62.15320 What are the appropriate units of measurement for reporting my data?
62.15325 When must I submit the initial report?
62.15330 What must I include in the initial report?
62.15335 When must I submit the annual report?
62.15340 What must I include in the annual report?
62.15345 What must I do if I am out of compliance with these standards?
62.15350 If a semiannual report is required, when must I submit it?
62.15355 What must I include in the semiannual out-of-compliance reports?
62.15360 Can reporting dates be changed?

AIR CURTAIN INCINERATORS THAT BURN 100 PERCENT YARD WASTE

62.15365 What is an air curtain incinerator?
62.15370 What is yard waste?
62.15375 What are the emission limits for air curtain incinerators that burn 100 percent yard waste?
62.15380 How must I monitor opacity for air curtain incinerators that burn 100 percent yard waste?
62.15385 What are the recordkeeping and reporting requirements for air curtain incinerators that burn 100 percent yard waste?

EQUATIONS

62.15390 What equations must I use?

TITLE V REQUIREMENTS

62.15395 Does this subpart require me to obtain an operating permit under title V of the Clean Air Act?
62.15400 When must I submit a title V permit application for my existing small municipal waste combustion unit?

DELEGATION OF AUTHORITY

62.15405 What authorities are retained by the Administrator?

DEFINITIONS

62.15410 What definitions must I know?

TABLES

TABLE 1 OF SUBPART JJJ OF PART 62—GENERIC COMPLIANCE SCHEDULES AND INCREMENTS OF PROGRESS
TABLE 2 OF SUBPART JJJ OF PART 62—CLASS I EMISSION LIMITS FOR EXISTING SMALL MUNICIPAL WASTE COMBUSTION UNITS
TABLE 3 OF SUBPART JJJ OF PART 62—CLASS I NITROGEN OXIDES EMISSION LIMITS FOR EXISTING SMALL MUNICIPAL WASTE COMBUSTION UNITS
TABLE 4 OF SUBPART JJJ OF PART 62—CLASS II EMISSION LIMITS FOR EXISTING SMALL MUNICIPAL WASTE COMBUSTION UNITS
TABLE 5 OF SUBPART JJJ OF PART 62—CARBON MONOXIDE EMISSION LIMITS FOR EXISTING SMALL MUNICIPAL WASTE COMBUSTION UNITS
TABLE 6 OF SUBPART JJJ OF PART 62—REQUIREMENTS FOR VALIDATING CONTINUOUS EMISSION MONITORING SYSTEMS (CEMS)
TABLE 7 OF SUBPART JJJ OF PART 62—REQUIREMENTS FOR CONTINUOUS EMISSION MONITORING SYSTEMS (CEMS)
TABLE 8 OF SUBPART JJJ OF PART 62—REQUIREMENTS FOR STACK TESTS
TABLE 9 OF SUBPART JJJ OF PART 62—SITE-SPECIFIC COMPLIANCE SCHEDULES AND INCREMENTS OF PROGRESS

AUTHORITY: 42 U.S.C. 7401–7671q.

SOURCE: 43 FR 51393, Nov. 3, 1978, unless otherwise noted.

Subpart A—General Provisions

§ 62.01 Definitions.

As used in this part, all terms not defined herein shall have the meaning given to them in the Clean Air Act and in part 60 of this chapter.

§ 62.02 Introduction.

(a) This part sets forth the Administrator's approval and disapproval of State plans for the control of pollutants and facilities under section 111(d), and section 129 as applicable, of the Act, and the Administrator's promulgation of such plans or portions of plans thereof. Approval of a plan or any portion of a plan is based on a determination by the Administrator that it meets the requirements of section 111(d), and section 129 as applicable, of

the Act and provisions of part 60 of this chapter.

(b)(1) If a State does not submit a complete, approvable plan, the Administrator may then promulgate a substitute plan or part of a plan. The promulgated provision, plus the approved parts of the State plan, constitute the applicable plan for purposes of the act.

(2) The part 60 subpart A of this chapter general provisions and appendices to part 60 apply to part 62, except as follows: 40 CFR 60.7(a)(1), 60.7(a)(3), and 60.8(a) and where special provisions set forth under the applicable subpart of this part shall apply instead of any conflicting provisions.

(c) The Administrator will promulgate substitute provisions for the disapproved regulatory provisions only. If a nonregulatory provision is disapproved, however, it will be noted in this part and a detailed explanation will be sent to the State.

(d) All approved regulatory provisions of each plan are incorporated by reference in this part. Section 62.12 provides information on availability of applicable plans. The Administrator and State and local agencies shall enforce (1) regulatory provisions of a plan approved or promulgated by the Administrator, and (2) all permit conditions or denials issued in carrying out the approved or promulgated regulations for the review of designated facilities.

(e) Each State's plan is dealt with in a separate subpart, with separate headings for different pollutants and facilities. The plans shall include an introductory section identifying the plan by name and the date of its submittal. Additional sections are included as necessary to specifically identify disapproved provisions, to set forth reasons for disapproval, and to set forth provisions of the plan promulgated by the Administrator. Except as otherwise specified, all supplemental information submitted to the Administrator with respect to any plan has been submitted by the Governor of the State.

(f) Revisions to applicable plans will be included in this part when approved or promulgated by the Administrator.

(g) Substitute plans promulgated by the Administrator for States that do not have approved plans are contained in separate subparts that appear after the subparts for States. These Federal plans include sections identifying the applicability of the plan, emission limits, compliance schedules, recordkeeping and reporting, performance testing, and monitoring requirements.

[43 FR 51393, Nov. 3, 1978, as amended at 63 FR 63201, Nov. 12, 1998; 68 FR 5158, Jan. 31, 2003]

§ 62.03 Extensions.

The Administrator may, whenever he determines necessary, extend the period for submission of any plan or plan revision or portion thereof.

§ 62.04 Approval status.

The approval status of each State's plan or portions thereof, are set forth in each subpart. All plans are approved unless specifically disapproved in the appropriate subpart.

§ 62.05 Legal authority.

(a) The Administrator's determination of the absence or inadequacy of legal authority required to be included in the plan is set forth in each subpart. This includes the legal authority of local agencies and State governmental agencies other than an air pollution control agency if such other agencies are assigned responsibility for carrying out a plan or portion thereof.

(b) No legal authority as such is promulgated by the Administrator. Where required regulatory provisions are not included in the plan by the State because of inadequate authority, substitute provisions are promulgated by the Administrator.

§ 62.06 Negative declarations.

A State may submit to the Administrator a letter certifying that no designated facilities exist in the State if such is the case. The negative declaration will be in lieu of a plan.

§ 62.07 Emission standards, compliance schedules.

(a) In each subpart, emission standards and compliance schedules which have been disapproved by the Administrator are identified, and those promulgated by the Administrator are set forth.

(b) The Administrator's approval or promulgation of any compliance schedule shall not affect the responsibility of the owner or operator to comply with any applicable emission limitation on or after the date for final compliance specified in the applicable schedule.

§ 62.08 Emission inventories and source surveillance.

(a) Each subpart identifies the plan provisions for source surveillance which are disapproved, and sets forth the Administrator's promulgation of necessary provisions for requiring designated sources to maintain records, make reports, and submit information.

(b) The Administrator will not promulgate provisions for disapproved State or local agency procedures for testing, inspection, investigation, or detection. However, detailed critiques of such portions will be provided to the State.

§ 62.09 Revision of plans by Administrator.

After notice and opportunity for public hearing in each affected State, the Administrator may revise any provision of an applicable plan if:

(a) The provision was promulgated by the Administrator and

(b) The plan, as revised, will be consistent with the Act and with the requirements of part 60, subpart B of this chapter.

§ 62.10 Submission to Administrator.

Except as otherwise provided in § 60.23 of this chapter, all requests, reports, applications, submittals, and other communications to the Administrator pursuant to this part shall be submitted in duplicate and addressed to the appropriate Regional Office of the Environmental Protection Agency, to the attention of the Director, Air and Hazardous Materials Division (Environmental Programs Division in Region II). The Regional Offices are as follows:

Region and jurisdiction covered	Address
I—Connecticut, Maine, Massachusetts, New Hampshire, Rhode Island, Vermont.	JFK Federal Building, Boston, Mass. 02203.
II—New York, New Jersey, Puerto Rico, Virgin Islands.	Federal Office Building, 26 Federal Plaza, New York, N.Y. 10007.
III—Delaware, District of Columbia, Pennsylvania, Maryland, Virginia, West Virginia.	Curtis Building, 6th and Walnut Sts., Philadelphia, Pa. 19106.
IV—Alabama, Florida, Georgia, Mississippi, Kentucky, North Carolina, South Carolina, Tennessee.	345 Courtland NE., Atlanta, Ga. 30308.
V—Illinois, Indiana, Michigan, Minnesota, Ohio, Wisconsin.	Mail Code A–17J, 77 West Jackson Blvd., Chicago, Il 60604–3590.
VI—Arkansas, Louisiana, New Mexico, Olkahoma, Texas.	1st International Building, 1201 Elm St., Dallas, Tex. 75270.
VII—Iowa, Kansas, Missouri, Nebraska.	Air, RCRA, and Toxics Division, 901 N. 5th Street, Kansas City, KS 66101.
VIII—Colorado, Montana, North Dakota, South Dakota, Utah, Wyoming.	916 Lincoln Towers, 1860 Lincoln St., Denver, Colo. 80203.
IX—Arizona, California, Hawaii, Nevada, Guam, American Samoa.	215 Fremont St., San Francisco, Calif. 94105.
X—Washington, Oregon, Idaho, Alaska.	1200 6th Ave., Seattle, Wash. 98101.

[43 FR 51393, Nov. 3, 1978, as amended at 62 FR 1834, Jan. 14, 1997; 68 FR 35729, June 17, 2003]

§ 62.11 Severability.

The provisions promulgated in this part and the various applications thereof are distinct and severable. If any provision of this part or the application thereof to any person or circumstances is held invalid, such invalidity shall not affect other provisions or application of such provision to other persons or circumstances which can be given effect without the invalid provision or application.

§ 62.12 Availability of applicable plans.

Copies of the applicable plans will be available for public inspection at the following locations:

(a) The offices of the Directors, Air and Hazardous Materials Divisions at EPA Regional Offices I, III–X, and the Director, Environmental Programs Division at EPA Regional Office II. The addresses and jurisdictions covered by these appear in § 62.10.

(b) Public Information Reference Unit, Library Systems Branch, EPA (PM 213), 401 M St., SW., Washington, DC 20460.

§ 62.13 Federal plans.

The Federal plans apply to owners and operators of affected facilities that are not covered by an EPA approved and currently effective State or Tribal plan. This Federal plan, or portions thereof, also applies to each affected facility located in any State or portion of Indian country whose approved State or Tribal plan for that area is subsequently vacated in whole or in part. Affected facilities are defined in each Federal plan.

(a) The substantive requirements of the municipal waste combustor Federal plan are contained in subpart FFF of this part. These requirements include emission limits, compliance schedules, testing, monitoring, and reporting and recordkeeping requirements.

(b) The substantive requirements of the municipal solid waste landfills Federal plan are contained in subpart GGG of this part. These requirements include emission limits, compliance schedules, testing, monitoring, and reporting and recordkeeping requirements.

(c) The substantive requirements of the hospital/ medical/infectious waste incinerator Federal plan are contained in subpart HHH of this part. These requirements include emission limits, compliance schedules, testing, monitoring and reporting and recordkeeping requirements.

(d)[Reserved]

(e) The substantive requirements of the small municipal waste combustion unit Federal plan are contained in subpart JJJ of this part. These requirements include emission limits, compliance schedules, testing, monitoring, and reporting and recordkeeping requirements.

[63 FR 63201, Nov. 12, 1998, as amended at 65 FR 49881, Aug. 15, 2000; 68 FR 5158, Jan. 31, 2003]

Subpart B—Alabama

AUTHORITY: Sec. 110(a) and 111(d), Clean Air Act (42 U.S.C. 7410(a) and 7411(d)).

SOURCE: 48 FR 31402, July 8, 1983, unless otherwise noted.

PLAN FOR THE CONTROL OF DESIGNATED POLLUTANTS FROM EXISTING FACILITIES (SECTION 111(d) PLAN)

§ 62.100 Identification of plan.

(a) *Identification of plan.* Alabama Designated Facility Plan (Section (d) Plan).

(b) *The plan was officially submitted as follows.* (1) Control of sulfuric acid mist emissions from existing sulfuric acid production units, submitted on May 18, 1980;

(2) Control of fluoride emissions from existing phosphate fertilizer plants, submitted on April 10, 1978.

(3) Alabama Department of Environmental Management Plan For the Control of Landfill Gas Emissions at Existing Municipal Solid Waste Landfills, submitted on January 6, 1998, by the Alabama Department of Environmental Management.

(4) State of Alabama Plan for Implementation of 40 CFR part 60, Subpart Cb, For Existing Municipal Waste Combustors, submitted on September 11, 1998, by the Alabama Department of Environmental Management.

(5) Alabama Department of Environmental Management Plan for the Control of Hospital/Medical/Infectious Waste Incinerators, submitted on April 20, 1999, by the Alabama Department of Environmental Management.

(c) *Designated facilities.* The plan applies to existing facilities in the following categories of sources:

(1) Sulfuric acid plants;

(2) Phosphate fertilizer plants.

(3) Existing municipal solid waste landfills.

(4) Existing municipal waste combustors.

(5) Existing hospital/medical/infectious waste incinerators.

[48 FR 31402, July 8, 1983, as amended at 63 FR 54058, Oct. 8, 1998; 63 FR 63990, Nov. 18, 1998; 65 FR 18911, Apr. 10, 2000]

SULFURIC ACID MIST FROM EXISTING SULFURIC ACID PLANTS

§ 62.101 Identification of sources.

The plan applies to existing facilities at the following sulfuric acid plants:

(a) Acid plants operated by

(1) Reichhold Chemical Company in Tuscaloosa,

(2) Stauffer Chemical Company in Mobile, and

(3) Estech Chemical in Dothan.

(b) There are no oleum plants.

(c) There are not sulfur-burning plants.

(d) There are no bound sulfur feedstock plants.

FLUORIDE EMISSIONS FROM PHOSPHATE FERTILIZER PLANTS

§ 62.102 Identification of sources.

The plan currently does not identify any sources subject to its fluoride emission limits.

LANDFILL GAS EMISSIONS FROM EXISTING MUNICIPAL SOLID WASTE LANDFILLS

§ 62.103 Identification of sources.

The plan applies to existing municipal solid waste landfills for which construction, reconstruction, or modification was commenced before May 30, 1991, that accepted waste at any time since November 8, 1987, or that have additional capacity available for future waste deposition, as described in 40 CFR part 60, subpart Cc.

[63 FR 54058, Oct. 8, 1998]

METALS, ACID GASES, ORGANIC COMPOUNDS AND NITROGEN OXIDE EMISSIONS FROM EXISTING MUNICIPAL WASTE COMBUSTORS WITH THE CAPACITY TO COMBUST GREATER THAN 250 TONS PER DAY OF MUNICIPAL SOLID WASTE

§ 62.104 Identification of sources.

The plan applies to existing facilities with a municipal waste combustor (MWC) unit capacity greater than 250 tons per day of municipal solid waste (MSW) at the following MWC sites:

(a) Solid Waste Disposal Authority of the City of Huntsville MWC, Huntsville, Alabama.

(b) [Reserved]

[63 FR 63990, Nov. 18, 1998]

AIR EMISSIONS FROM HOSPITAL/MEDICAL/INFECTIOUS WASTE INCINERATORS

§ 62.105 Identification of sources.

The plan applies to existing hospital/medical/infectious waste incinerators for which construction, reconstruction, or modification was commenced before June 20, 1996, as described in 40 CFR part 60, subpart Ce.

[65 FR 18911, Apr. 10, 2000]

AIR EMISSIONS FROM SMALL EXISTING MUNICIPAL WASTE COMBUSTION UNITS

§ 62.106 Identification of plan—negative declaration.

Letter from the Alabama Department of Environmental Management submitted January 11, 2001, certifying that there are no small municipal waste combustion units subject to 40 CFR part 60, subpart BBBB.

[67 FR 273, Jan. 3, 2002]

AIR EMISSIONS FROM COMMERCIAL AND INDUSTRIAL SOLID WASTE INCINERATION (CISWI) UNITS—SECTION 111(D)/129 PLAN

§ 62.107 Identification of sources.

The Plan applies to existing Commercial and Industrial Solid Waste Incineration Units that commenced construction on or before November 30, 1999.

[68 FR 4105, Jan. 28, 2003]

Subpart C—Alaska

SOURCE: 44 FR 76281, Dec. 26, 1979, unless otherwise noted.

FLUORIDE EMISSIONS FROM PHOSPHATE FERTILIZER PLANTS

§ 62.350 Identification of plan—negative declaration.

The Alaska Department of Environmental Conservation submitted on June 9, 1977, certification that there are no existing phosphate fertilizer plants in the State subject to part 60, subpart B of this chapter.

ACID MIST FROM SULFURIC ACID PLANTS

§ 62.351 Identification of plan—negative declaration.

The Alaska Department of Environmental Conservation submitted on June 9, 1977, certification that there are no existing sulfuric acid plants in

the State subject to part 60, subpart B of this chapter.

TOTAL REDUCED SULFUR EMISSIONS FROM KRAFT PULP MILLS

§ 62.352 Identification of plan—negative declaration.

The Alaska Department of Environmental Conservation submitted on June 9, 1977, certification that there are no existing kraft pulp mills in the State subject to part 60, subpart B of this chapter.

FLUORIDE EMISSIONS FROM PRIMARY ALUMINUM REDUCTION PLANTS

§ 62.353 Identification of plan—negative declaration.

The Alaska Department of Environmental Conservation submitted on June 9, 1977, certification that there are no existing primary aluminum reduction plants in the State subject to part 60, subpart B of this chapter.

EMISSIONS FROM EXISTING MUNICIPAL WASTE COMBUSTORS WITH THE CAPACITY TO BURN GREATER THAN 250 TONS PER DAY OF MUNICIPAL SOLID WASTE

§ 62.354 Identification of plan—negative declaration.

Letter from the Department of Environmental Conservation submitted June 30, 1997 certifying that there are no existing municipal waste combustor units in the State of Alaska that are subject to part 60, subpart Cb, of this chapter.

[65 FR 33466, May 24, 2000]

Subpart D—Arizona

LANDFILL GAS EMISSIONS FROM EXISTING MUNICIPAL SOLID WASTE LANDFILLS

SOURCE: Sections 62.600 through 62.602 appear at 64 FR 50771, Sept. 20, 1999, unless otherwise noted.

§ 62.600 Identification of plan.

The Arizona Department of Environmental Quality submitted on June 17, 1997 and June 29, 1999 the State of Arizona's Section 111(d) Plan for Existing Municipal Solid Waste Landfills.

§ 62.601 Identification of sources.

The plan applies to all existing municipal solid waste landfills for which construction, reconstruction, or modification was commenced before May 30, 1991, as described in 40 CFR part 60, subpart Cc.

§ 62.602 Effective date.

The effective date of EPA approval of the plan is November 19, 1999.

EMISSIONS FROM EXISTING MUNICIPAL WASTE COMBUSTORS WITH THE CAPACITY TO BURN GREATER THAN 250 TONS PER DAY OF MUNICIPAL SOLID WASTE

§ 62.620 Identification of plan—negative declaration.

Letter from the Department of Environmental Quality submitted June 7, 1996 certifying that there are no existing municipal waste combustor units in the State of Arizona that are subject to part 60, subpart Cb, of this chapter.

[65 FR 33466, May 24, 2000]

EMISSIONS FROM EXISTING HOSPITAL/MEDICAL/INFECTIOUS WASTE INCINERATORS

SOURCE: Sections 62.630 through 62.632 appear at 65 FR 38744, June 22, 2000, unless otherwise noted.

§ 62.630 Identification of plan.

The Arizona Department of Environmental Quality submitted on November 16, 1999 the State of Arizona's section 111(d)/129 Plan for Existing Hospital/Medical/Infectious Waste Incinerators (HMIWI). The submitted plan does not apply to sources located in Pima and Pinal counties.

§ 62.631 Identification of sources.

The plan applies to existing HMIWI for which construction was commenced on or before June 20, 1996, as described in 40 CFR part 60, subpart Ce.

§ 62.632 Effective date.

The effective date of EPA approval of the plan is August 21, 2000.

EMISSIONS FROM SMALL EXISTING MUNICIPAL WASTE COMBUSTION UNITS

§ 62.640 Identification of plan—negative declaration.

Letter from the Arizona Department of Environmental Quality, submitted on March 15, 2001, certifying that there are no small municipal waste combustion units subject to part 60, subpart BBBB, of this chapter.

[66 FR 67098, Dec. 28, 2001]

Subpart E—Arkansas

SOURCE: 47 FR 20491, May 12, 1982, unless otherwise noted.

PLAN FOR THE CONTROL OF DESIGNATED POLLUTANTS FROM EXISTING FACILITIES (SECTION 111(d) PLAN)

§ 62.850 Identification of plan.

(a) Identification of plan: Arkansas Plan for the Control of Designated Pollutants from Existing Plants (Section 111(d) Plan).

(b) The plan was officially submitted as follows:

(1) Control of sulfuric acid mist from sulfuric acid plants, and fluoride emissions from phosphate fertilizer plants, submitted on July 11, 1979, having been adopted by the State on May 25, 1979, and letter dated August 6, 1981.

(2) Control of total reduced sulfur (TRS) emissions from existing kraft pulp mills submitted by the Governor on February 28, 1983, and adopted by the State on January 28, 1983.

(3) Revisions to the Plan adopted by the Arkansas Commission on Pollution Control and Ecology on July 24, 1992, effective August 30, 1992, and a negative declaration for phosphate fertilizer plants dated September 2, 1992, submitted by the Governor on September 14, 1992.

(4) Revisions to the Plan adopted by the Arkansas Commission on Pollution Control and Ecology on May 30, 1997, effective July 1, 1997, and submitted by the Governor on August 18, 1997.

(c) Designated facilities: The plan applies to existing facilities in the following categories of sources:

(1) Sulfuric acid plants.

(2) Kraft pulp mills.

[47 FR 20491, May 12, 1982, as amended at 49 FR 35773, Sept. 12, 1984; 63 FR 11608, Mar. 10, 1998]

§ 62.852 [Reserved]

FLUORIDE EMISSIONS FROM EXISTING PHOSPHATE FERTILIZER PLANTS

§ 62.854 Identification of plan—negative declaration.

On September 24, 1992, the Arkansas Department of Pollution Control and Ecology submitted a negative declaration, signed by the Chief of the Air Division on September 2, 1992, certifying that there are no existing phosphate fertilizer plants in the State of Arkansas subject to part 60, subpart B, of this chapter.

[63 FR 11608, Mar. 10, 1998]

SULFURIC ACID MIST EMISSIONS FROM EXISTING SULFURIC ACID PLANTS

§ 62.855 Identification of sources.

(a) The plan applies to existing facilities at the following existing sulfuric acid plant:

(1) El Dorado Chemical Company in El Dorado, Arkansas.

(2) [Reserved]

(b) [Reserved]

[63 FR 11608, Mar. 10, 1998]

TOTAL REDUCED SULFUR EMISSIONS FROM EXISTING KRAFT PULP MILLS

§ 62.865 Identification of sources.

(a) The plan applies to existing facilities at the following kraft pulp mill plants:

(1) International Paper Company in Camden, Arkansas.

(2) International Paper Company in Pine Bluff, Arkansas.

(3) Green Bay Packaging, Arkansas Kraft Division in Morrilton, Arkansas.

(4) Gaylord Container Corporation in Pine Bluff, Arkansas.

(5) Georgia-Pacific Corporation in Crossett, Arkansas.

(6) Georgia-Pacific Corporation in Ashdown, Arkansas.

(7) Potlatch Corporation of McGehee, Arkansas.

(b) [Reserved]

[49 FR 35773, Sept. 12, 1984, as amended at 63 FR 11608, Mar. 10, 1998]

§62.866 Compliance schedule.

The Compliance Schedules were submitted on December 16, 1985, by the Governor to control total reduced Sulfur emissions from the seven kraft pulp mills identified in §62.865(a). The schedules specify final compliance dates and enforceable increments to be as expeditiously as practicable but not more than six years from approval of the state regulations; i.e., October 12, 1990.

[51 FR 40803, Nov. 10, 1986]

EMISSIONS FROM EXISTING MUNICIPAL WASTE COMBUSTORS WITH THE CAPACITY TO BURN GREATER THAN 250 TONS PER DAY OF MUNICIPAL SOLID WASTE

§62.875 Identification of plan—negative declaration.

Letter from the Department of Pollution Control and Ecology submitted July 1, 1997 certifying that there are no existing municipal waste combustor units in the State of Arkansas that are subject to part 60, subpart Cb, of this chapter.

[65 FR 33466, May 24, 2000]

Subpart F—California

PLAN FOR THE CONTROL OF DESIGNATED POLLUTANTS FROM EXISTING FACILITIES (SECTION 111(D) PLAN)

AUTHORITY: Sec. 111 of the Clean Air Act, as amended (42 U.S.C. 7411).

SOURCE: 47 FR 28100, June 29, 1982, unless otherwise noted.

§62.1100 Identification of plan.

(a) State of California Designated Facility Plan (Section 111(d) Plan).

(b) The plan was officially submitted as follows:

(1) Control of fluoride emissions from existing facilities at phosphate fertilizer plants, submitted on February 26 and July 16, 1979 and April 7, 1980 having been adopted by the Districts on December 1 and 6, 1979 and January 9, 1979. A letter clarifying the plan was submitted on March 27, 1979. Revisions to the plan were submitted on September 23, 1980 and February 5 and July 6, 1981.

(2) Control of sulfuric acid mist from existing facilities at sulfuric acid production units, submitted on February 26, July 16, and September 7, 1979 and April 7, 1980, having been adopted by the Districts on December 1 and 6, 1978 and January 9, 1979. Revisions to the plan were submitted on October 31, 1980, February 18, and May 1, 1981.

(3) Control of total reduced sulfur (TRS) emissions from existing kraft pulping mills submitted as follows:

(i) 9–25–79; submittal of existing rules; (*a*) Bay Area Air Quality Management District (AQMD) Rule 1, Regulation 12—Kraft Pulp Mills.

(*b*) Humboldt County Air Pollution Control District Regulation 1; Rule 130—Definitions, Rule 240—Permit to Operate, Rule 450—Sulfide Emissions from Kraft Pulp Mills.

(*c*) Shasta County Air Pollution Control District Rule 3:2—Specific Air Contaminants.

(ii) 3–21–80; Clarification of Bay Area Rule 1, Regulation 12—Kraft Pulp Mills.

(iii) 4–7–80; Summary of district rules and State laws that meet the requirements of 40 CFR, parts 60.23–60.26 for Designated Facilities in general.

(iv) 5–29–80; revision of Bay Area AQMD Rule 1, Regulation 12—Kraft Pulp Mills.

(v) 9–5–80; Evidence of public hearing and annual report schedule defined for Bay Area Rule 1, Regulation 12—Kraft Pulp Mills.

(vi) 11–4–81; (*a*) Humboldt County APCD Rules 130—Definitions; 240—Permit to Operate; and 450—Kraft Pulp Mills amended (7–28–81).

(*b*) Shasta County APCD Rule 3:2—Specific Contaminants amended (8–4–81).

(*c*) A summary of compliance of all districts with the requirements set forth in 40 CFR 60.23 through 60.26.

(*d*) A list of witnesses appearing at Humboldt and Shasta Counties public hearings and a summary of testimonies Statewide emissions inventory of all TRS sources in the State.

(4) [Reserved]

(5) State of California's Section 111(d) Plan For Existing Municipal Solid

Waste Landfills, submitted on September 26, 1997, June 26, 1998, November 9, 1998, and July 14, 1999 by the California Air Resources Board.

(i) Revision to the State of California's Section 111(d) Plan for Existing Municipal Solid Waste Landfills, submitted by the California Air Resources Board on December 20, 2000.

(ii) [Reserved]

(c) Designated facilities: The plans apply to existing facilities in the following categories of sources:

(1) Existing phosphate fertilizer plants.

(2) Existing sulfuric acid production units.

(3) Existing kraft pulp mills.

(4) [Reserved]

(5) Existing municipal solid waste landfills.

[47 FR 28100, June 29, 1982, as amended at 47 FR 47384, Oct. 26, 1982; 64 FR 51451, Sept. 23, 1999; 66 FR 48356, Sept. 20, 2001]

EFFECTIVE DATE NOTE: At 68 FR 34333, June 9, 2003, § 62.1100 was amended by adding paragraphs (b)(6) and (c)(6), effective July 9, 2003. For the convenience of the user, the added text is set forth as follows:

§ 62.1100 Identification of plan.

* * * * *

(b) * * *

(6) State of California's Section 129/111(d) Plan for Existing Large Municipal Waste Combustors, submitted by the California Air Resources Board on September 23, 1998, with supplemental materials submitted on May 2, 2002.

* * * * *

(c) * * *

(6) Existing large municipal waste combustors.

FLUORIDE EMISSIONS FROM EXISTING PHOSPHATE FERTILIZER PLANTS

§ 62.1101 Identification of sources.

The plan applies to existing facilities at the following phosphate fertilizer plants:

(a) Occidental Chemical Company in San Joaquin County.

(b) Simplot Company in Kings County.

(c) Valley Nitrogen Products, Inc., in Fresno County.

SULFURIC ACID MIST EMISSIONS FROM EXISTING SULFURIC ACID PRODUCTION UNITS

§ 62.1102 Identification of sources.

The plan applies to existing facilities at the following sulfuric acid production units:

(a) Allied Chemical Corporation in Alameda County.

(b) Monsanto Company in Alameda County.

(c) Occidental Chemical Company in Fresno County.

(d) Stauffer Chemical Company in Alameda County.

(e) Valley Nitrogen Products, Inc. in Kern County.

FLUORIDE EMISSIONS FROM PRIMARY ALUMINUM REDUCTION PLANTS

§ 62.1103 Identification of plan—negative declaration.

TOTAL REDUCED SULPHUR EMISSIONS FROM EXISTING KRAFT PULP MILLS

§ 62.1104 Identification of sources.

The plan applies to existing facilities at the following kraft pulp mills:

(a) Louisiana Pacific, Antioch, Contra Costa County Pulp Mill.

(b) Louisiana Pacific Corp., Samoa Complex.

(c) Crown Simpson Pulp Company, Fairhaven.

(d) Simpson Paper Company, Shasta County Pulp Mill.

[47 FR 47385, Oct. 26, 1982]

LANDFILL GAS EMISSIONS FROM EXISTING MUNICIPAL SOLID WASTE LANDFILLS

§ 62.1115 Identification of sources.

The plan applies to existing municipal solid waste landfills for which construction, reconstruction, or modification was commenced before May 30, 1991, as described in 40 CFR part 60, subpart Cc.

[64 FR 51451, Sept. 23, 1999]

EMISSIONS FROM SMALL EXISTING MUNICIPAL WASTE COMBUSTION UNITS

§62.1125 Identification of plan—negative declaration.

Letter from the California Air Resources Board, submitted on July 20, 2001, certifying that there are no small municipal waste combustion units subject to part 60, subpart BBBB, of this chapter.

[66 FR 67098, Dec. 28, 2001]

EMISSIONS FROM LARGE EXISTING MUNICIPAL WASTE COMBUSTION UNITS

§62.1130 Identification of sources.

The plan applies to existing large municipal waste combustors that were constructed on or before September 20, 1994, as described in 40 CFR part 60, subpart Cb.

[68 FR 34334, June 9, 2003]

EFFECTIVE DATE NOTE: At 68 FR 34334, §62.1130 and the undesignated center heading were added, effective July 9, 2003.

Subpart G—Colorado

LANDFILL GAS EMISSIONS FROM EXISTING MUNICIPAL SOLID WASTE LANDFILLS

§62.1350 Identification of plan.

''111(d) Plan for Existing Municipal Solid Waste Landfills Existing in Colorado'' and the associated State regulations in Part A of Colorado Regulation No. 6, submitted by the State on April 13, 1998.

[63 FR 40373, July 29, 1998]

§62.1351 Identification of sources.

The plan applies to all existing municipal solid waste landfills for which construction, reconstruction, or modification was commenced before May 30, 1991 that accepted waste at any time since November 8, 1987 or that have additional capacity available for future waste deposition, as described in 40 CFR part 60, subpart Cc.

[63 FR 40373, July 29, 1998]

§62.1352 Effective date.

The effective date of the plan for municipal solid waste landfills is September 28, 1998.

[63 FR 40373, July 29, 1998]

AIR EMISSIONS FROM HOSPITAL/MEDICAL/INFECTIOUS WASTE INCINERATORS

SOURCE: Sections 62.1360 through 62.1362 appear at 65 FR 38740, June 22, 2000, unless otherwise noted.

§62.1360 Identification of plan.

Section 111(d) Plan for Hospital/Medical/Infectious Waste Incinerators and the associated State regulation in part A of Colorado Regulation No. 6, submitted by the State on December 22, 1998 and October 4, 1999.

§62.1361 Identification of sources.

The plan applies to all existing hospital/medical/infectious waste incinerators for which construction was commenced on or before June 20, 1996, as described in 40 CFR part 60, subpart Ce.

§62.1362 Effective date.

The effective date for the portion of the plan applicable to existing hospital/medical/infectious waste incinerators is August 21, 2000.

EMISSIONS FROM EXISTING MUNICIPAL WASTE COMBUSTORS WITH THE CAPACITY TO BURN GREATER THAN 250 TONS PER DAY OF MUNICIPAL SOLID WASTE

§62.1370 Identification of plan—negative declaration.

Letter from the Department of Public Health and Environment submitted July 30, 1996 certifying that there are no existing municipal waste combustor units in the State of Colorado that are

subject to part 60, subpart Cb, of this chapter.

[65 FR 33466, May 24, 2000]

Subpart H—Connecticut

PLAN FOR THE CONTROL OF DESIGNATED POLLUTANTS FROM EXISTING FACILITIES (SECTION 111(d) PLAN)

§ 62.1500 Identification of Plan.

(a) *Identification of Plan.* Connecticut Plan for the Control of Designated Pollutants from Existing Plants (section 111(d) Plan).

(b) The plan was officially submitted as follows:

(1) Plan for Implementing the Municipal Waste Combustor Guidelines and New Source Performance Standards, submitted on October 1, 1999.

(2) Revisions to Plan for Implementing the Municipal Waste Combustor Guidelines and New Source Performance Standards, submitted by the Connecticut Department of Environmental Protection on October 15, 2001 and including Connecticut DEP's revised regulation 22a–174–38. Certain provisions of the revised regulation 22a–174–38 submitted with the MWC Plan are stricken from the regulatory text. The stricken provisions include standards for MWC units constructed after September 20, 1994, more stringent mercury emission standards, and shutdown provisions for mass burn refractory MWC units.

(c) *Designated facilities.* The plan applies to existing sources, constructed on or before September 20, 1994, in the following categories of sources:

(1) Existing municipal waste combustor units greater than 250 tons per day.

[65 FR 21358, Apr. 21, 2000, as amended at 66 FR 63313, Dec. 6, 2001]

METALS, ACID GASES, ORGANIC COMPOUNDS AND NITROGEN OXIDE EMISSIONS FROM EXISTING MUNICIPAL WASTE COMBUSTOR UNITS WITH THE CAPACITY TO COMBUST GREATER THAN 250 TONS PER DAY OF MUNICIPAL SOLID WASTE

§ 62.1501 Identification of sources.

(a) The plan applies to the following existing municipal waste combustor facilities:

(1) Bridgeport RESCO in Bridgeport.

(2) Ogden Martin Systems of Bristol.

(3) Resource Recovery Systems of Mid-Connecticut in Hartford.

(4) Riley Energy Systems of Lisbon.

(5) American Ref-Fuel Company of Southeastern Connecticut in Preston.

(b) [Reserved]

[65 FR 21358, Apr. 21, 2000]

FLUORIDE EMISSIONS FROM PHOSPHATE FERTILIZER PLANTS

§ 62.1600 Identification of plan—negative declaration.

The State Department of Environmental Protection submitted on November 30, 1977, a letter certifying that there are no existing phosphate fertilizer plants in the state subject to part 60, subpart B of this chapter.

[44 FR 54052, Sept. 18, 1979]

SULFURIC ACID MIST EMISSIONS FROM SULFURIC ACID PRODUCTION UNITS

§ 62.1625 Identification of plan—negative declaration.

The State Department of Environmental Protection submitted on November 30, 1977, a letter certifying that there are no existing sulfuric acid plants in the state subject to part 60, subpart B of this chapter.

[44 FR 54052, Sept. 18, 1979]

TOTAL REDUCED SULFUR EMISSIONS FROM EXISTING KRAFT PULP MILLS

§ 62.1650 Identification of plan—negative declaration.

The State Department of Environmental Protection submitted on December 28, 1988, a letter certifying that there are no existing kraft pulp mills

in the State subject to part 60, subpart B of this chapter.

[54 FR 9046 Mar. 3, 1989]

FLUORIDE EMISSIONS FROM EXISTING PRIMARY ALUMINUM PLANTS

§62.1700 Identification of plan—negative declaration.

The State Department of Environmental Protection submitted on December 28, 1988, a letter certifying that there are no existing primary aluminum reduction plants in the State subject to part 60, subpart B of this chapter.

[54 FR 9046 Mar. 3, 1989]

Subpart I—Delaware

FLUORIDE EMISSIONS FROM PHOSPHATE FERTILIZER PLANTS

§62.1850 Identification of plan—negative declaration.

The Delaware Department of Natural Resources and Environmental Control submitted on November 7, 1977, a letter certifying that there are no existing phosphate fertilizer plants in the State subject to part 60, subpart B of this chapter.

[45 FR 43412, June 27, 1980]

SULFURIC ACID MIST FROM EXISTING SULFURIC ACID PLANTS

§62.1875 Identification of plan.

(a) Title of plan: State implementation plan for control of sulfuric acid mist from existing sulfuric acid plants.

(b) The plan was officially submitted on September 8, 1978 with amendments submitted on December 29, 1980.

(c) Identification of Sources: The plan includes the following sulfuric acid plants:

(1) Allied Chemical Company, Claymont (New Castle County).

[47 FR 10536, Mar. 11, 1982]

TOTAL REDUCED SULFUR EMISSIONS FROM EXISTING KRAFT PULP MILLS

§62.1900 Identification of plan—negative declaration.

The Delaware Department of Natural Resources and Environmental Control submitted on September 8, 1982, a letter certifying that there are no kraft pulp mills in the State subject to part 60, subpart B of this chapter.

[48 FR 10652, Mar. 14, 1983]

FLUORIDE EMISSIONS FROM PRIMARY ALUMINUM REDUCTION PLANTS

§62.1925 Identification of plan—negative declaration.

The Delaware Department of Natural Resources and Environmental Control submitted on September 8, 1982, a letter certifying that there are no primary aluminum reduction plants in the State subject to part 60, subpart B of this chapter.

[48 FR 10652, Mar. 14, 1983]

LANDFILL GAS EMISSIONS FROM EXISTING MUNICIPAL SOLID WASTE LANDFILLS (SECTION 111(d) PLAN)

SOURCE: Sections 62.1950 through 62.1952 appear at 64 FR 50457, Sept. 17, 1999, unless otherwise noted.

§62.1950 Identification of plan.

Section 111(d) plan for municipal solid waste landfills and the associated Delaware Department of Natural Resources, Division of Air and Waste Management, Regulation No. 20, Section 28, as submitted on April 23, 1998.

§62.1951 Identification of sources.

The plan applies to all Delaware existing municipal solid waste landfills for which construction, reconstruction, or modification was commenced before May 30, 1991 and that accepted waste at any time since November 8, 1987, or that have additional capacity available for future waste deposition, as described in 40 CFR part 60, Subpart Cc.

§ 62.1952 Effective date.

The effective date of the plan for municipal solid waste landfills is November 16, 1999.

EMISSIONS FROM EXISTING MUNICIPAL WASTE COMBUSTORS WITH THE CAPACITY TO BURN GREATER THAN 250 TONS PER DAY OF MUNICIPAL SOLID WASTE

§ 62.1960 Identification of plan—negative declaration.

Letter from the Department of Natural Resources and Environmental Control submitted March 26, 1996 certifying that there are no existing municipal waste combustor units in the State of Delaware that are subject to part 60, subpart Cb, of this chapter.

[65 FR 33466, May 24, 2000]

EMISSIONS FROM EXISTING HOSPITAL/MEDICAL/INFECTIOUS WASTE INCINERATORS (HMIWI)—SECTION 111(d)/129 PLAN

SOURCE: Sections 62.1975 through 62.1977 appear at 65 FR 20090, Apr. 14, 2000, unless otherwise noted.

§ 62.1975 Identification of plan.

Section 111(d)/129 plan for HMIWI and the associated Delaware Department of Natural Resources, Division of Air and Waste Management, Regulation No. 20, section 29, as submitted on September 17, 1998.

§ 62.1976 Identification of sources.

The plan applies to all Delaware existing HMIWI for which construction was commenced on or before June 20, 1996.

§ 62.1977 Effective date.

The effective date of the plan for hospital/medical/infectious waste incinerators is June 13, 2000.

EMISSIONS FROM EXISTING SMALL MUNICIPAL WASTE COMBUSTION UNITS

§ 62.1980 Identification of plan—negative declaration.

Letter from the Delaware Department of Natural Resources and Environmental Control submitted November 16, 2001, certifying that there are no existing small municipal waste combustion units within the State of Delaware that are subject to 40 CFR part 60, subpart BBBB.

[68 FR 51, Jan. 2, 2003]

EMISSIONS FROM EXISTING COMMERCIAL/INDUSTRIAL SOLID WASTE INCINERATION UNITS

§ 62.1985 Identification of plan—negative declaration.

Letter from the Delaware Department of Natural Resources and Environmental Control submitted November 16, 2001, certifying that there are no existing commercial/industrial solid waste incineration units within the State of Delaware that are subject to 40 CFR part 60, subpart DDDD.

[68 FR 49, Jan. 2, 2003]

Subpart J—District of Columbia

FLUORIDE EMISSIONS FROM PHOSPHATE FERTILIZER PLANTS

§ 62.2100 Identification of plan—negative declaration.

The Department of Environmental Services submitted on December 12, 1977 a letter certifying that there are no existing phosphate fertilizer plants in the District subject to part 60, subpart B of this chapter.

[45 FR 43412, June 27, 1980]

SULFURIC ACID MIST EMISSIONS FROM EXISTING SULFURIC ACID PLANTS

§ 62.2101 Identification of plan—negative declaration.

The Director, Department of Environmental Services submitted on March 7, 1978 a letter certifying there are no existing sulfuric acid production units in the District subject to part 60, subpart B of this chapter.

[46 FR 41783, Aug. 18, 1981]

TOTAL REDUCED SULFUR EMISSIONS FROM EXISTING KRAFT PULP MILLS

§ 62.2110 Identification of plan—negative declaration.

The Mayor of the District of Columbia submitted on July 16, 1980 a letter certifying there are no existing primary kraft pulp mills in the District

subject to part 60, subpart B of this chapter.

[46 FR 41783, Aug. 18, 1981]

FLUORIDE EMISSIONS FROM EXISTING PRIMARY ALUMINUM PLANTS

§ 62.2120 Identification of plan—negative declaration.

The Mayor of the District of Columbia submitted on May 29, 1980 a letter certifying there are no existing primary aluminum plants in the District subject to part 60, subpart B of this chapter.

[46 FR 41783, Aug. 18, 1981]

EMISSIONS FROM EXISTING MUNICIPAL WASTE COMBUSTORS WITH THE CAPACITY TO BURN GREATER THAN 250 TONS PER DAY OF MUNICIPAL SOLID WASTE

§ 62.2130 Identification of plan—negative declaration.

Letter from the Department of Consumer and Regulatory Affairs submitted July 6, 1992 certifying that there are no existing municipal waste combustor units in the District of Columbia that are subject to part 60, subpart Cb, of this chapter.

[65 FR 33466, May 24, 2000]

LANDFILL GAS EMISSIONS FROM EXISTING MUNICIPAL SOLID WASTE LANDFILLS

§ 62.2140 Identification of plan—negative declaration.

Letter from the Department of Consumer and Regulatory Affairs submitted September 11, 1997, certifying that there are no existing municipal solid waste landfills in the District of Columbia that are subject to 40 CFR part 60, subpart Cc.

[68 FR 55, Jan. 2, 2003]

EMISSIONS FROM EXISTING SMALL MUNICIPAL WASTE COMBUSTION UNITS

§ 62.2145 Identification of plan—negative declaration.

Letter from the District of Columbia Department of Health, Environmental Health Administration, submitted November 27, 2001, certifying that there are no existing small municipal waste combustion units within the District of Columbia that are subject to 40 CFR part 60, subpart BBBB.

[68 FR 51, Jan. 2, 2003]

EMISSIONS FROM EXISTING HOSPITAL/MEDICAL/INFECTIOUS WASTE INCINERATOR (HMIWI) UNITS

§ 62.2150 Identification of plan—negative declaration.

Letter from the Department of Health, Environmental Health Administration, submitted to EPA on June 25, 1999, certifying that there are no known existing HMIWI units in the District of Columbia.

[68 FR 53, Jan. 2, 2003]

EMISSIONS FROM EXISTING COMMERCIAL/INDUSTRIAL SOLID WASTE INCINERATION UNITS

§ 62.2155 Identification of plan—negative declaration.

Letter from the District of Columbia Department of Health, Environmental Health Administration, submitted November 27, 2001, certifying that there are no existing commercial/industrial solid waste incineration units within the District of Columbia that are subject to 40 CFR part 60, subpart DDDD.

[68 FR 49, Jan. 2, 2003]

Subpart K—Florida

AUTHORITY: Secs. 110(a) and 111(d), Clean Air Act (42 U.S.C. 7410(a) and 7411(d)).

SOURCE: 48 FR 31402, July 8, 1983, unless otherwise noted.

PLAN FOR THE CONTROL OF DESIGNATED POLLUTANTS FROM EXISTING FACILITIES (SECTION 111(d) PLAN)

§ 62.2350 Identification of plan.

(a) *Identification of plan.* Florida Designated Facility Plan (Section 111(d) Plan).

(b) *The plan was officially submitted as follows.* (1) Control of sulfuric acid mist emissions from existing sulfuric acid production units, submitted on December 14, 1978.

(2) Control of total reduced sulfur (TRS) emissions from existing kraft pulp mills and tall oil plants (both new

and existing) submitted on May 24, 1985, and revision submitted on June 10, 1986, by the Florida Department of Environmental Regulation (FDER). No action is taken on sections 17–2.600(4)(c)7 and 8.

(3) The final compliance date to achieve the TRS emission limits for the black liquor evaporation system, the batch digester system and the continuous digester system for St. Joe Paper Company in Port St. Joe is September 14, 1989.

(4) The final compliance date to achieve TRS emission limits for the No. 5 Multiple Effect Evaporation System, batch digester system and Kamyr digester system for Container Corporation of America in Fernandina Beach, Florida is June 1, 1990.

(5) Control of metals, acid gases, organic compounds and nitrogen oxide emissions from existing municipal waste combustors was submitted by the Florida Department of Environmental Protection on November 18, 1996.

(6) State of Florida Department of Environmental Protection Section 111(d) State Plan For Municipal Solid Waste Landfills, submitted on October 28, 1998, by the Florida Department of Environmental Protection.

(7) State of Florida Department of Environmental Protection Section 111(d) State Plan for Hospital/Medical/Infectious Waste Incinerators, submitted on September 16, 1999, by the Florida Department of Environmental Protection.

(c) *Designated facilities.* The plan applies to existing facilities in the following categories of sources:

(1) Sulfuric acid plants.

(2) Kraft pulp mills.

(3) Existing municipal waste combusters.

(4) Existing municipal solid waste landfills.

(5) Existing hospital/medical/infectious waste incinerators.

[48 FR 31402, July 8, 1983, as amended at 53 FR 30053, Aug. 10, 1988; 54 FR 40003, Sept. 29, 1989; 54 FR 48102, Nov. 21, 1989; 62 FR 60787, Nov. 13, 1997; 64 FR 29964, June 4, 1999; 65 FR 68908, Nov. 15, 2000]

SULFURIC ACID MIST FROM EXISTING SULFURIC ACID PLANTS

§ 62.2351 Identification of sources.

The plan applies to existing facilities at the following sulfuric acid plants:

(a) Acid plants operated by:

(1) Occidental Petroleum Company in Hamilton County,

(2) AMAX Phosphate Inc. in Manatee County,

(3) Conserv Chemical in Nichols,

(4) Farmland Industry in Bartow County,

(5) W. R. Grace Company in Polk County,

(6) Royster Fertilizer in Polk County,

(7) USS Agrichemicals in Polk County,

(8) Central Farmers Co-Op in Polk County,

(9) Agrico Chemical Company in Polk County,

(10) Gardinier, Inc. in Hillsborough County, and

(11) ESTECH in Polk County.

(b) There are no oleum plants.

(c) There are no sulfur-burning plants.

(d) There are no bound sulfur feedstock plants.

FLUORIDE EMISSIONS FROM PRIMARY ALUMINUM REDUCTION PLANTS

§ 62.2352 Identification of source—negative declaration.

The Florida Department of Environmental Regulation submitted on April 22, 1985, a letter certifying that there are no existing primary aluminum reduction plants in the State subject to part 60, subpart B of this chapter.

[50 FR 26204, June 25, 1985]

TOTAL REDUCED SULFUR EMISSIONS FROM KRAFT PULP MILLS AND TALL OIL PLANTS

§ 62.2353 Identification of sources.

The plan applies to existing facilities at the following existing kraft pulp plants and tall oil plants:

(a) Alton Packaging Corporation in Jacksonville

(b) Buckeye Cellulose Corporation in Perry

(c) Champion International Corporation (Formerly St. Regis Paper Company) in Cantonment

(d) Container Corporation of America in Fernandina Beach

(e) Georgia-Pacific Corporation in Palatka

(f) Jacksonville Kraft Paper Company in Jacksonville

(g) St. Joe Paper Company in Port St. Joe

(h) Southwest Forest Industries in Panama City

(i) Arizona Chemical Company (Tall Oil Plant) in Panama City

(j) Sylvachem Corporation (Tall Oil Plant) in Port St. Joe

[53 FR 30053, Aug. 10, 1988]

§ 62.2354 Compliance schedules.

The State of Florida has provided that the individual source compliance schedules would be developed and submitted by the affected sources to the State following plan adoption; and that the increments of progress pursuant to 40 CFR 60.21(h) would be specified at that time; this is an acceptable procedure pursuant to 40 CFR 60.24(e)(2). However, the State must submit these schedules to EPA for approval; and these schedules must meet the public hearing requirements of 40 CFR 60.23 or ones deemed equivalent by the Administrator pursuant to 40 CFR 60.23(g).

[53 FR 30053, Aug. 10, 1988]

METALS, ACID GASES, ORGANIC COMPOUNDS AND NITROGEN OXIDE EMISSIONS FROM EXISTING MUNICIPAL WASTE COMBUSTORS WITH THE CAPACITY TO COMBUST GREATER THAN 250 TONS PER DAY OF MUNICIPAL SOLID WASTE

§ 62.2355 Identification of sources.

The plan applies to existing facilities with a municipal waste combustor (MWC) unit capacity greater than 250 tons per day of municipal solid waste (MSW).

[62 FR 60787, Nov. 13, 1997]

LANDFILL GAS EMISSIONS FROM EXISTING MUNICIPAL SOLID WASTE LANDFILLS

§ 62.2360 Identification of sources.

The plan applies to existing municipal solid waste landfills for which construction, reconstruction, or modification was commenced before May 30, 1991, that accepted waste at any time since November 8, 1987, or that have additional capacity available for future waste deposition, as described in 40 CFR part 60, subpart Cc.

[64 FR 29964, June 4, 1999]

AIR EMISSIONS FROM HOSPITAL/MEDICAL/INFECTIOUS WASTE INCINERATORS

§ 62.2370 Identification of sources.

The plan applies to existing hospital/medical/infectious waste incinerators for which construction, reconstruction, or modification was commenced before June 20, 1996, as described in 40 CFR part 60, subpart Ce.

[65 FR 68908, Nov. 15, 2000]

AIR EMISSIONS FROM COMMERCIAL AND INDUSTRIAL SOLID WASTE INCINERATION (CISWI) UNITS—SECTION 111(D)/129 PLAN

§ 62.2380 Identification of sources.

The Plan applies to existing Commercial and Industrial Solid Waste Incineration Units that Commenced Construction On or Before November 30, 1999.

[68 FR 17885, Apr. 14, 2003]

Subpart L—Georgia

AUTHORITY: Secs. 110(a) and 111(d), Clean Air Act (42 U.S.C. 7410(a) and 7411(d)).

SOURCE: 48 FR 31402, July 8, 1983, unless otherwise noted.

PLAN FOR THE CONTROL OF DESIGNATED POLLUTANTS FROM EXISTING FACILITIES (SECTION 111(d) PLAN)

§ 62.2600 Identification of plan.

(a) *Identification of plan.* Georgia Designated Facility Plan (Section 111(d) Plan).

(b) *The plan was officially submitted as follows.* (1) Control of sulfuric acid mist

emissions from existing sulfuric acid production units, submitted on January 31, 1978;

(2) Control of total reduced sulfur emissions from existing facilities at kraft pulp mills, submitted on January 8, 1982.

(3) A compliance schedule for sources subject to the plan for the control of total reduced sulfur emissions from existing kraft pulp mills and a starting date for such rule, submitted on June 3, 1988.

(4) State of Georgia Plan for Implementation of 40 CFR Part 60, Subpart Cb, For Existing Municipal Waste Combustors, submitted on November 13, 1997, by the Georgia Department of Natural Resources.

(5) State of Georgia Plan for Implementation of 40 CFR Part 60, Subpart Cc, For Existing Municipal Solid Waste Landfills, submitted on January 20, 1998, by the Georgia Department of Natural Resources.

(6) State of Georgia Plan for Implementation of 40 CFR Part 60, Subpart Ce, for Hospital/Medical/Infectious Waste Incinerators Constructed on or Before June 20, 1996, submitted on September 15, 1998, by the Georgia Department of Natural Resources.

(c) *Designated facilities.* The plan applies to existing facilities in the following categories of sources:

(1) Sulfuric acid plants;

(2) Kraft pulp mills.

(3) Existing municipal waste combustors.

(4) Existing municipal solid waste landfills.

(5) Existing hospital/medical/infectious waste incinerators.

[48 FR 31402, July 9, 1983, as amended at 63 FR 27496, May 19, 1998; 63 FR 63416, Nov. 13, 1998; 65 FR 10024, Feb. 25, 2000]

SULFURIC ACID MIST FROM EXISTING SULFURIC ACID PLANTS

§ 62.2601 Identification of sources.

The plan applies to existing facilities at the following sulfuric acid plants:

(a) Sulfur-burning plants operated by:

(1) American Cyanamid Company in Savannah, and

(2) Cities Service Company in Augusta.

(b) Oleum plant of Cities Service Company in Augusta.

(c) There are no bound sulfur feedstock plants.

FLUORIDE EMISSIONS FROM PHOSPHATE FERTILIZER PLANTS

§ 62.2602 Identification of sources—negative declaration.

The Georgia Environmental Protection Division submitted on July 14, 1977, a letter certifying that there are no existing phosphate fertilizer plants in the State subject to part 60, subpart B, of this chapter.

TOTAL REDUCED SULFUR EMISSIONS FROM KRAFT PULP MILLS

§ 62.2603 Identification of sources.

The plan applies to existing facilities at the following kraft pulp mills:

(a) Continental Can in Augusta,

(b) Continental Can in Port Wentworth,

(c) Brunswick in Brunswick,

(d) Georgia Kraft in Rome,

(e) Georgia Kraft in Macon,

(f) Gilman in St. Marys,

(g) Great Southern in Cedar Springs,

(h) Interstate in Riceboro,

(i) ITT Rayonier in Jesup,

(j) Owens-Illinois in Valdosta, and

(k) Union Camp in Savannah.

§ 62.2604 [Reserved]

FLUORIDE EMISSIONS FROM EXISTING PRIMARY ALUMINUM REDUCTION PLANTS

§ 62.2605 Identification of sources—negative declaration.

The Georgia Environmental Protection Division submitted a letter on October 19, 1983, certifying that there are no existing primary aluminum reduction plants in the State of Georgia subject to 40 CFR part 60, subpart B, of this chapter.

[49 FR 3855, Jan. 31, 1984]

METALS, ACID GASES, ORGANIC COMPOUNDS AND NITROGEN OXIDE EMISSIONS FROM EXISTING MUNICIPAL WASTE COMBUSTORS WITH THE CAPACITY TO COMBUST GREATER THAN 250 TONS PER DAY OF MUNICIPAL SOLID WASTE

§62.2606 Identification of sources.

The plan applies to existing facilities with a municipal waste combustor (MWC) unit capacity greater than 250 tons per day of municipal solid waste (MSW) at the following MWC sites:

(1) Savannah Energy Systems Company, Savannah, Georgia.

(2) [Reserved]

[63 FR 27496, May 19, 1998]

LANDFILL GAS EMISSIONS FROM EXISTING MUNICIPAL SOLID WASTE LANDFILLS

§62.2607 Identification of sources.

The plan applies to existing municipal solid waste landfills for which construction, reconstruction, or modification was commenced before May 30, 1991, that accepted waste at any time since November 8, 1987, or that have additional capacity available for future waste deposition, as described in 40 CFR part 60, subpart Cc.

[63 FR 63416, Nov. 13, 1998]

AIR EMISSIONS FROM HOSPITAL/MEDICAL/INFECTIOUS WASTE INCINERATORS

§62.2608 Identification of sources.

The plan applies to existing hospital/medical/infectious waste incinerators for which construction, reconstruction, or modification was commenced before June 20, 1996, as described in 40 CFR Part 60, Subpart Ce.

[65 FR 10024, Feb. 25, 2000]

AIR EMISSIONS FROM SMALL EXISTING MUNICIPAL WASTE COMBUSTION UNITS

§62.2609 Identification of plan—negative declaration.

Letter from the Georgia Department of Natural Resources submitted December 13, 2001, certifying that there are no small municipal waste combustion units subject to 40 CFR part 60, subpart BBBB.

[67 FR 273, Jan. 3, 2002]

Subpart M—Hawaii

EMISSIONS FROM SMALL EXISTING MUNICIPAL WASTE COMBUSTION UNITS

§62.2850 Identification of plan—negative declaration.

Letter from the State of Hawaii Department of Health, submitted on March 13, 2001, certifying that there are no small municipal waste combustion units subject to part 60, subpart BBBB, of this chapter.

[66 FR 67098, Dec. 28, 2001]

Subpart N—Idaho

FLUORIDE EMISSIONS FROM EXISTING PRIMARY ALUMINUM PLANTS

§62.3100 Identification of plan—negative declaration.

The State of Idaho Department of Health and Welfare submitted on February 23, 1981, certification that there are no existing primary aluminum plants in the State subject to part 60, subpart B of this chapter.

[47 FR 47250, Oct. 25, 1982]

METALS, ACID GASES, ORGANIC COMPOUNDS, PARTICULATES AND NITROGEN OXIDE EMISSIONS FROM EXISTING HOSPITAL/MEDICAL/INFECTIOUS WASTE INCINERATORS

§62.3110 Identification of plan.

(a) The Idaho Division of Environmental Quality submitted to the Environmental Protection Agency a State Plan for the control of air emissions from Hospital/Medical/Infectious Waste Incinerators on December 16, 1999.

(b) Identification of Sources: The Idaho State Plan applies to all existing HMIWI facilities for which construction was commenced on or before June 20, 1996, as described in 40 CFR part 60, subpart Ce. (This plan does not apply to facilities on tribal lands).

(c) The effective date for the portion of the plan applicable to existing Hospital/Medical/Infectious Waste Incinerators is June 20, 2000.

[65 FR 21361, Apr. 21, 2000]

CONTROL OF NON-METHANE ORGANIC COMPOUNDS EMISSIONS FROM EXISTING MUNICIPAL SOLID WASTE LANDFILLS

§ 62.3120 Identification of plan.

(a) The Idaho Division of Environmental Quality submitted to the Environmental Protection Agency a State Plan for the control of air emissions from Municipal Solid Waste Landfills on December 16, 1999.

(b) Identification of Sources: The Idaho State Plan applies to all existing Municipal Solid Waste Landfills which commenced construction, reconstruction, or modification before May 30, 1991, as described in 40 CFR part 60, subpart Cc. (This plan does not apply to facilities on tribal lands).

(c) The effective date for the portion of the plan applicable to existing Municipal Solid Waste Landfills is May 30, 2000.

[65 FR 16323, Mar. 28, 2000]

EMISSIONS FROM EXISTING MUNICIPAL WASTE COMBUSTORS WITH THE CAPACITY TO BURN GREATER THAN 250 TONS PER DAY OF MUNICIPAL SOLID WASTE

§ 62.3130 Identification of plan—negative declaration.

Letter from the Department of Health and Welfare submitted October 28, 1996 certifying that there are no existing municipal waste combustor units in the State of Idaho that are subject to part 60, subpart Cb, of this chapter.

[65 FR 33466, May 24, 2000]

Subpart O—Illinois

SULFURIC ACID MIST EMISSIONS FROM EXISTING SULFURIC ACID PRODUCTION PLANTS

§ 62.3300 Identification of plan.

(a) Title of Plan: ''Illinois Plan for the Control of Sulfuric Acid Mist from Existing Contract Process Sulfuric Acid Plants.''

(b) The plan was officially submitted on August 10, 1978.

(c) Identification of sources: The plan includes the following sulfuric acid production plants:

(1) Beker Industries in LaSalle County.

(2) U.S.I. Chemical Company in Douglas County.

(3) Mobil Chemical Company in Bureau County.

(4) Swift Chemical Company in Cook County.

(5) American Cyanamid Company in Will County.

(6) Amax Zinc Company in St. Clair County.

(7) Monsanto Company in St. Clair County.

(8) Smith Douglas—Division of Border Chemical in Livingston County.

[46 FR 57896, Nov. 27, 1981]

TOTAL REDUCED SULFUR EMISSIONS FROM KRAFT PULP MILLS

§ 62.3325 Identification of plan—negative declaration.

The Illinois Environmental Protection Agency submitted on July 23, 1979, a letter certifying that there are no existing kraft pulp mills in the State subject to part 60, subpart B of this chapter.

[46 FR 57896 Nov. 27, 1981]

LANDFILL GAS EMISSIONS FROM EXISTING MUNICIPAL SOLID WASTE LANDFILLS

§ 62.3330 Identification of plan.

The Illinois Plan for implementing the Federal Municipal Solid Waste Landfill Emission Guidelines to control air emissions from existing landfills in the State was submitted on July 21, 1998. The Illinois rules for Municipal Solid Waste Landfills are primarily found in Title 35: Environmental Protection; Subtitle B: Air Pollution; Chapter I: Pollution Control Board; Subchapter C: Emission Standards and Limitations for Stationary Sources; Part 220: Nonmethane Organic Compounds of the Illinois Administrative Code (35 IAC). Part 220 was adopted by the IPCB on June 17, 1998 and filed in the principal office on that day. Part 220 was published in the *Illinois*

Register on July 10, 1998 at 22 *Ill. Reg.* 11790 and became effective on July 31, 1998. As part of the same rulemaking action, the IPCB amended 35 IAC Part 201: Permits and General Provisions; Subpart A: Definitions; Section 201.103 (a) by adding the following abbreviations: Mg = megagrams, M(3) = cubic meters, NMOC = nonmethane organic compounds, and yr = year. In Section 201.103 (b) the conversion factor for 1000 gal was changed from 3.785 cubic meters to 3.785 M(3). In Subpart C: Prohibitions, Section 201.146 was amended by adding paragraph (ggg) which states that municipal solid waste landfills with a maximum total design capacity of less than 2.5 million Mg or 2.5 million M(3) are not required to install a gas collection and control system pursuant to 35 Ill. Adm. Code 220 or 800 through 849 or Section 9.1 of the [Illinois Environmental Protection] Act. These amendments were published in the *Illinois Register* on July 10, 1998 at 22 *Ill. Reg.* 11824 and became effective on July 31, 1998.

[63 FR 64632, Nov. 23, 1998]

§62.3331 Identification of sources.

The plan applies to all existing municipal solid waste landfills for which construction, reconstruction or modification was commenced before May 30, 1991 that accepted waste at any time since November 8, 1987 or that have additional capacity available for future waste deposition, as consistent with 40 CFR part 60.

[63 FR 64632, Nov. 23, 1998]

§62.3332 Effective date.

The effective date of the plan for municipal solid waste landfills is January 22, 1999.

[63 FR 64632, Nov. 23, 1998]

EMISSIONS FROM SMALL MUNICIPAL WASTE COMBUSTION UNITS WITH THE CAPACITY TO COMBUST AT LEAST 35 TONS PER DAY OF MUNICIPAL SOLID WASTE BUT NO MORE THAN 250 TONS PER DAY OF MUNICIPAL SOLID WASTE AND COMMENCED CONSTRUCTION ON OR BEFORE AUGUST 30, 1999

§62.3335 Identification of plan—negative declaration.

On June 25, 2001, the State of Illinois certified to the satisfaction of the United States Environmental Protection Agency that no major sources categorized as small Municipal Waste Combustors are located in the State of Illinois.

[66 FR 59713, Nov. 30, 2001]

METALS, ACID GASES, ORGANIC COMPOUNDS AND NITROGEN OXIDE EMISSIONS FROM EXISTING HOSPITAL / MEDICAL INFECTIOUS WASTE INCINERATORS

SOURCE: Sections 62.3340 through 62.3342 appear at 64 FR 36605, July 7, 1999, unless otherwise noted.

§62.3340 Identification of plan.

Illinois submitted, on May 28, 1999, a State Plan for implementing the Emission Guidelines affecting Hospital/Medical Infectious Waste Incinerators (HMIWI). The enforceable mechanism for this plan is 35 Ill. Adm. Code 229. The rule was adopted by the Illinois Pollution Control Board on May 6, 1999. The rule became effective on May 15, 1999, and was published in the Illinois Register on May 28, 1999 at 23 Ill. Reg. 6477

§62.3341 Identification of sources.

The Illinois State Plan for existing Hospital/Medical/Infectious Waste Incinerators (HMIWI) applies to all HMIWIs for which construction commenced either on or before June 20, 1996.

§ 62.3342 Effective Date.

The effective date of the Illinois State Plan for existing Hospital/Medical/Infectious Waste Incinerators is September 7, 1999.

METALS, ACID GASES, ORGANIC COMPOUNDS AND NITROGEN OXIDE EMISSIONS FROM EXISTING MUNICIPAL WASTE COMBUSTORS WITH THE CAPACITY TO COMBUST GREATER THAN 250 TONS PER DAY OF MUNICIPAL SOLID WASTE

§ 62.3350 Identification of plan.

Illinois submitted ''State Plan to Implement Emission Guidelines for Large Municipal Waste Combustors'' on June 23, 1997. The plan applies specifically to Robbins Resource Recovery Center (RRRC), located in Robbins, Illinois. The enforceable mechanism for this source is special condition 18(c) of operating permit number 88120055, issued to RRRC by Illinois on June 2, 1997.

[62 FR 67572, Dec. 29, 1997]

Subpart P—Indiana

FLUORIDE EMISSIONS FROM PHOSPHATE FERTILIZER PLANTS

§ 62.3600 Identification of plan—negative declaration.

The State Board of Health submitted on April 18, 1977, a letter certifying that there are no existing phosphate fertilizer plants in the State subject to part 60, subpart B of this chapter.

FLUORIDE EMISSIONS FROM EXISTING PRIMARY ALUMINUM PLANTS

§ 62.3625 Identification of plan.

(a) *Title of plan*. ''Fluoride Emission Limitations for Existing Primary Aluminum Plants.''

(b) The plan was officially submitted on January 7, 1981 by the Technical Secretary of the Indiana Air Pollution Control Board.

(c) The State on July 17, 1981, submitted Alcoa methods 4075A, 4076A, 913A, 914E and 914F as alternate test methods.

(d) On October 17, 2002, and January 22, 2003, the State notified EPA that it is revising the control strategy for this plan. Rule 326 IAC 11–5 is removed as the control strategy for this plan and the Federal NESHAP for controlling fluoride emissions from primary aluminum reduction plants promulgated on October 7, 1997 (62 FR 52384), and codified at 40 CFR part 63, subpart LL is the revised control strategy for this plan.

[46 FR 57896, Nov. 27, 1981, as amended at 46 FR 57897, Nov. 27, 1981; 68 FR 11474, Mar. 11, 2003]

LANDFILL GAS EMISSIONS FROM EXISTING MUNICIPAL SOLID WASTE LANDFILLS

SOURCE: Sections 62.3630 through 62.3631 appear at 65 FR 16327, Mar. 28, 2000, unless otherwise noted.

§ 62.3630 Identification of plan.

''Section 111(d) Plan for Municipal Solid Waste Landfills'' and the associated State regulations found in Title 326: Air Pollution Control Board of the Indiana Administrative Code (IAC), Article 8. Volatile Organic Compound Rules, Rule 8. Municipal Solid Waste Landfills Located in Clark, Floyd, Lake and Porter Counties and Rule 8.1. Municipal Solid Waste Landfills Not Located in Clark, Floyd, Lake and Porter Counties added at 21 Indiana Register 31, filed with the Secretary of State September 8, 1997, effective October 8, 1997, submitted by the State to EPA on September 30, 1999. Also included in this plan are rules submitted to EPA on November 21, 1995 and February 14, 1996: Title 326 IAC Article 8. Volatile Organic Compound Rules, Rule 8. Municipal Solid Waste Landfills adopted at 19 Indiana Register 1050, filed with the Secretary of State December 19, 1995, effective January 18, 1996.

§ 62.3631 Identification of sources.

The plan applies to all existing municipal solid waste landfills for which construction, reconstruction, or modification was commenced before May 30, 1991 that accepted waste at any time since November 8, 1987 or that have additional capacity available for future waste deposition, as described in 40 CFR part 60, subpart Cc.

§ 62.3632 Effective date.

The effective date of the plan for municipal solid waste landfills is May 30, 2000.

METALS, ACID GASES, ORGANIC COMPOUNDS AND NITROGEN OXIDE EMISSIONS FROM EXISTING HOSPITAL/MEDICAL INFECTIOUS WASTE INCINERATORS

SOURCE: Sections 62.3640 through 62.3642 appear at 64 FR 70599, Dec. 17, 1999, unless otherwise noted.

§ 62.3640 Identification of plan.

Indiana submitted, September 30, 1999, a State Plan for implementing the Emission Guidelines affecting Hospital/Medical Infectious Waste Incinerators (HMIWI). The enforceable mechanism for this plan is 326 Indiana Administrative Code 11–6. The rule was adopted by the Indiana Pollution Control Board on September 2, 1998. The rule was published in the Indiana Register on March 1, 1999, and became effective on March 11, 1999.

§ 62.3641 Identification of sources.

The Indiana State Plan for existing Hospital/Medical/Infectious Waste Incinerators (HMIWI) applies to all HMIWIs for which construction commenced either on or before June 20, 1996.

§ 62.3642 Effective Date.

The Federal effective date of the Indiana State Plan for existing Hospital/Medical/Infectious Waste Incinerators is February 15, 2000.

EMISSIONS FROM SMALL MUNICIPAL WASTE COMBUSTION UNITS WITH THE CAPACITY TO COMBUST AT LEAST 35 TONS PER DAY OF MUNICIPAL SOLID WASTE BUT NO MORE THAN 250 TONS PER DAY OF MUNICIPAL SOLID WASTE AND COMMENCED CONSTRUCTION ON OR BEFORE AUGUST 30, 1999

§ 62.3645 Identification of plan—negative declaration.

On November 7, 2001, and December 3, 2001, the State of Indiana certified to the satisfaction of the United States Environmental Protection Agency that no sources categorized as small Municipal Waste Combustors are located in the State of Indiana.

[67 FR 10622, Mar. 8, 2002]

METALS, ACID GASES, ORGANIC COMPOUNDS AND NITROGEN OXIDE EMISSIONS FROM EXISTING MUNICIPAL WASTE COMBUSTORS WITH THE CAPACITY TO COMBUST GREATER THAN 250 TONS PER DAY OF MUNICIPAL SOLID WASTE

SOURCE: Sections 62.3650–62.3652 appear at 64 FR 62982, Nov. 18, 1999, unless otherwise noted.

§ 62.3650 Identification of plan.

On September 30, 1999, Indiana submitted the State Plan for implementing the Federal Large Municipal Waste Combustor (MWC) Emission Guidelines to control emissions from existing MWCs with the capacity to combust greater than 250 tons per day of municipal solid waste. The enforceable mechanism for this plan is a State rule codified in 326 Indiana Administrative Code (IAC) 11–7. The rule was adopted on September 2, 1998, filed with the Secretary of State on January 18, 1999, and became effective on February 17, 1999. The rule was published in the Indiana State Register on March 1, 1999 (22 IR 1967).

§ 62.3651 Identification of sources.

The plan applies to all existing municipal waste combustors with the capacity to combust greater than 250 tons per day of municipal solid waste, and for which construction, reconstruction, or modification was commenced on or before September 20, 1994, as consistent with 40 CFR part 60, subpart Cb. Subject facilities include the Indianapolis Resource Recovery Facility in Indianapolis, Indiana.

§ 62.3652 Effective Date.

The effective date of the approval of the Indiana State Plan for municipal waste combustors with the capacity to combust greater than 250 tons per day of municipal solid waste is January 18, 2000.

CONTROL OF AIR EMISSIONS FROM EXISTING COMMERCIAL AND INDUSTRIAL SOLID WASTE INCINERATOR UNITS

§ 62.3660 Identification of plan.

On December 20, 2002, Indiana submitted a plan to control emissions from Commercial and Industrial Solid Waste Incinerators (CISWI). The Indiana plan incorporates by reference substantial portions of 40 CFR part 60, subpart DDDD, Emission Guidelines and Compliance Times for CISWI units built on or before November 30, 1999.

[68 FR 35183, June 12, 2003]

EFFECTIVE DATE NOTE: At 68 FR 35183, June 12, 2003, § 62.3660 was added, effective Aug. 11, 2003.

Subpart Q—Iowa

SOURCE: 50 FR 52921, Dec. 27, 1985, unless otherwise noted.

PLAN FOR THE CONTROL OF DESIGNATED POLLUTANTS FROM EXISTING FACILITIES (SECTION 111(d) PLAN)

§ 62.3850 Identification of plan.

(a) *Identification of plan.* Iowa Plan for Control of Designated Pollutants from Existing Facilities (Section 111(d) Plan).

(b) The plan was officially submitted as follows:

(1) Control of sulfuric acid mist from existing facilities at sulfuric acid production plants, effective on June 16, 1971, having been submitted by the State on February 23, 1978. Additional information was provided in letters of February 7, 1983; May 13, 1985; and June 12, 1985.

(2) Control of fluoride emissions from existing facilities at phosphate fertilizer plants, effective on August 29, 1979, having been submitted by the State on October 19, 1979. Additional information was provided in letters of February 7, 1983; May 13, 1985; and June 12, 1985.

(3) Control of sulfur dioxide and sulfuric acid mist from sulfuric acid manufacturing plants in Polk County were adopted on October 26, 1993, and submitted on March 23, 1994.

(c) *Designated facilities.* The plan applies to existing facilities in the following categories of sources:

(1) Sulfuric acid production plants.

(2) Phosphate fertilizer plants.

[50 FR 52921, Dec. 27, 1985, as amended at 60 FR 31092, June 13, 1995]

SULFURIC ACID MIST FROM EXISTING SULFURIC ACID PRODUCTION PLANTS

§ 62.3851 Identification of sources.

(a) The plan applies to existing facilities at the following sulfuric acid production plants:

(1) Agrico Chemical Company, Fort Madison, Iowa

(2) Koch Sulfur Products Company, Dubuque, Iowa

FLUORIDE EMISSIONS FROM EXISTING PHOSPHATE FERTILIZER PLANTS

§ 62.3852 Identification of sources.

(a) The plan applies to existing facilities at the following phosphate fertilizer plants:

(1) Agrico Chemical Company, Fort Madison, Iowa.

(2) Chevron Chemical Company, Fort Madison, Iowa.

(3) Occidental Chemical Company, Buffalo, Iowa.

TOTAL REDUCED SULFUR EMISSIONS FROM EXISTING KRAFT PULP MILLS

§ 62.3853 Identification of plan—negative declaration.

Letter from Executive Director of Iowa Department of Environmental Quality submitted on February 7, 1983, certifying that there are no kraft pulp mills in the State of Iowa subject to part 60, subpart B of this chapter.

FLUORIDE EMISSIONS FROM EXISTING PRIMARY ALUMINUM REDUCTION PLANTS

§ 62.3854 Identification of plan—negative declaration.

Letter from the Iowa Department of Water, Air and Waste Management submitted on May 13, 1985, certifying that there are no primary aluminum reduction plants in the State of Iowa subject to part 60, subpart B of this chapter.

TOTAL REDUCED SULFUR EMISSIONS FROM EXISTING KRAFT PULP MILLS

§ 62.3910 Identification of plan—negative declaration.

Letter from Executive Director of Iowa Department of Environmental Quality submitted on February 7, 1983, certifying that there are no kraft pulp mills in the State of Iowa, subject to part 60, subpart B of this chapter.

[49 FR 43058, Oct. 26, 1984]

EMISSIONS FROM EXISTING MUNICIPAL WASTE COMBUSTORS WITH THE CAPACITY TO BURN GREATER THAN 250 TONS PER DAY OF MUNICIPAL SOLID WASTE

§ 62.3911 Identification of plan—negative declaration.

Letter from the Administrator of the Environmental Protection Division of the Department of Natural Resources submitted June 4, 1991, certifying that there are no existing municipal waste combustors in the state of Iowa subject to this 111(d) requirement.

[56 FR 56321, Nov. 4, 1991]

EMISSIONS FROM EXISTING MUNICIPAL WASTE COMBUSTORS WITH THE CAPACITY TO BURN GREATER THAN 35 MEGAGRAMS PER DAY OF MUNICIPAL SOLID WASTE

§ 62.3912 Identification of plan-negative declaration.

Letter from the Iowa Department of Natural Resources submitted December 27, 1996, certifying that there are no municipal waste combustors in the state of Iowa subject to part 60, subpart Cb of this chapter.

[62 FR 41873, Aug. 4, 1997]

AIR EMISSIONS FROM EXISTING MUNICIPAL SOLID WASTE LANDFILLS

§ 62.3913 Identification of plan.

(a) *Identification of plan.* Iowa plan for control of landfill gas emissions from existing municipal solid waste landfills and associated state regulations submitted on December 22, 1997.

(b) *Identification of sources.* The plan applies to all existing municipal solid waste landfills for which construction, reconstruction, or modification was commenced before May 30, 1991, that accepted waste at any time since November 8, 1987, or that have additional capacity available for future waste deposition, and have design capacities greater than 2.5 million megagrams and nonmethane organic emissions greater than 50 megagrams per year, as described in 40 CFR part 60, subpart Cc.

(c) *Effective date.* The effective date of the plan for municipal solid waste landfills is June 22, 1998.

(d) Amended plan for the control of air emissions from municipal solid waste landfills submitted by the Iowa Department of Natural Resources on September 19, 2001. The effective date of the amended plan is February 11, 2002.

[63 FR 20103, Apr. 23, 1998, as amended at 66 FR 64154, Dec. 12, 2001]

AIR EMISSIONS FROM EXISTING HOSPITAL/MEDICAL/INFECTIOUS WASTE INCINERATORS

§ 62.3914 Identification of plan.

(a) *Identification of plan.* Iowa plan for the control of air emissions from hospital/medical/infectious waste incinerators submitted by the Iowa Department of Natural Resources on January 29, 1999.

(b) *Identification of sources.* The plan applies to existing hospital/medical/infectious waste incinerators constructed on or before June 20, 1996.

(c) *Effective date.* The effective date of the plan is August 16, 1999.

(d) Amended plan for the control of air emissions from hospital/medical/infectious waste incinerators submitted by the Iowa Department of Natural Resources on September 19, 2001. The effective date of the amended plan is February 11, 2002.

[64 FR 32427, June 17, 1999, as amended at 66 FR 64152, Dec. 12, 2001]

AIR EMISSIONS FROM SMALL EXISTING MUNICIPAL WASTE COMBUSTION UNITS

§ 62.3915 Identification of plan—negative declaration.

Letter from the Iowa Department of Natural Resources submitted March 21, 2001, certifying that there are no small

municipal waste combustion units subject to 40 CFR part 60, subpart BBBB.

[66 FR 46961, Sept. 10, 2001]

Subpart R—Kansas

SOURCE: 49 FR 7234, Feb. 28, 1984, unless otherwise noted.

FLUORIDE EMISSIONS FROM EXISTING PHOSPHATE FERTILIZER PLANTS

§ 62.4100 Identification of plan—negative declaration.

Letter from the Director of the Department of Health and Environment submitted on August 2, 1978, certifying that there are no phosphate fertilizer manufacturing facilities in the State of Kansas.

TOTAL REDUCED SULFUR EMISSIONS FROM EXISTING KRAFT PULP MILLS

§ 62.4125 Identification of plan—negative declaration.

Letter from the Director of the Department of Health and Environment submitted on July 17, 1979, certifying that there are no kraft pulp mills in the State of Kansas.

FLUORIDE EMISSIONS FROM EXISTING PRIMARY ALUMINUM REDUCTION PLANTS

§ 62.4150 Identification of plan—negative declaration.

Letter from the Director, Division of Environment, Kansas Department of Health and Environments submitted on May 23, 1984, certifying that there are no primary aluminum reduction plants on the State of Kansas, subject to part 60, subpart B of this chapter.

[49 FR 43058, Oct. 26, 1984]

SULFURIC ACID MIST FROM EXISTING SULFURIC ACID PRODUCTION PLANTS

§ 62.4175 Identification of plan.

(a) *Identification of plan.* State of Kansas Implementation Plan for Control of Sulfuric Acid Mist from Existing Sulfuric Acid Plants.

(b) The Plan was officially submitted on February 6, 1986.

(c) *Identification of sources.* The Plan applies to existing facilities at the following existing sulfuric acid plant:

(1) Koch Sulfur Products, DeSoto, Kansas.

[51 FR 37275, Oct. 21, 1986]

EMISSIONS FROM EXISTING MUNICIPAL WASTE COMBUSTORS WITH THE CAPACITY TO BURN GREATER THAN 250 TONS PER DAY OF MUNICIPAL SOLID WASTE

§ 62.4176 Identification of plan—negative declaration.

Letter from the Director of the Bureau of Air and Waste Management of the Department of Health and Environment submitted July 3, 1991, certifying that there are no existing municipal waste combustors in the state of Kansas subject to this 111(d) requirement.

[56 FR 56321, Nov. 4, 1991]

EMISSIONS FROM EXISTING MUNICIPAL WASTE COMBUSTORS WITH THE CAPACITY TO BURN GREATER THAN 35 MEGAGRAMS PER DAY OF MUNICIPAL SOLID WASTE

§ 62.4177 Identification of plan—negative declaration.

Letter from the Kansas Department of Health submitted April 26, 1996, certifying that there are no municipal waste combustors in the state of Kansas subject to part 60, subpart Cb of this chapter.

[62 FR 41874, Aug. 4, 1997]

AIR EMISSIONS FROM EXISTING MUNICIPAL SOLID WASTE LANDFILLS

§ 62.4178 Identification of plan.

(a) *Identification of plan.* Kansas plan for control of landfill gas emissions from existing municipal solid waste landfills and associated state regulations submitted on December 1, 1997.

(b) *Identification of sources.* The plan applies to all existing municipal solid waste landfills for which construction, reconstruction, or modification was commenced before May 30, 1991, that accepted waste at any time since November 8, 1987, or that have additional capacity available for future waste deposition, and have design capacities greater than 2.5 million megagrams and nonmethane organic emissions greater than 50 megagrams per year, as described in 40 CFR part 60, subpart Cc.

(c) *Effective date.* The effective date of the plan for municipal solid waste landfills is May 19, 1998.

[63 FR 13532, Mar. 20, 1998]

AIR EMISSIONS FROM EXISTING HOSPITAL/MEDICAL/INFECTIOUS WASTE INCINERATORS

§ 62.4179 Identification of plan.

(a) Identification of plan. Kansas plan for the control of air emissions from hospital/medical/infectious waste incinerators submitted by the Kansas Department of Health and Environment on May 4, 2000.

(b) Identification of sources. The plan applies to existing hospital/medical/infectious waste incinerators constructed on or before June 20, 1996.

(c) Effective date. The effective date of the plan is September 12, 2000.

(d) Amended plan for the control of air emissions from hospital/medical/infectious waste incinerators submitted by the Kansas Department of Health and Environment on October 25, 2001. This plan revision establishes a final compliance date of September 15, 2002, for two incinerators in Johnson and Wyandotte Counties, Kansas. The effective date of the amended plan is February 19, 2002.

[65 FR 43704, July 14, 2000, as amended at 66 FR 65450, Dec. 19, 2001]

AIR EMISSIONS FROM SMALL EXISTING MUNICIPAL WASTE COMBUSTION UNITS

§ 62.4180 Identification of plan—negative declaration.

Letter from the Kansas Department of Health and Environment submitted February 13, 2001, certifying that there are no small municipal waste combustion units subject to 40 CFR part 60, subpart BBBB.

[66 FR 46961, Sept. 10, 2001]

AIR EMISSIONS FROM EXISTING COMMERCIAL AND INDUSTRIAL SOLID WASTE INCINERATION UNITS

§ 62.4181 Identification of plan—negative declaration.

Letter from the Kansas Department of Health and Environment submitted November 16, 2001, certifying that there are no commercial and industrial solid waste incineration units subject to 40 CFR part 60, subpart DDDD.

[67 FR 4181, Jan. 29, 2002]

Subpart S—Kentucky

SOURCE: 47 FR 22956, May 26, 1982, unless otherwise noted.

PLAN FOR THE CONTROL OF DESIGNATED POLLUTANTS FROM EXISTING FACILITIES (SECTION 111(d) PLAN)

§ 62.4350 Identification of plan.

(a) *Identification of plan.* Kentucky Designated Facility Plan (Section 111(d) Plan).

(b) The plan was officially submitted as follows:

(1) Control of sulfuric acid mist emissions from existing facilities at sulfuric acid plants, total reduced sulfur emissions from existing facilities at kraft pulp mills, fluoride emissions from existing facilities at primary aluminum reduction plants, officially submitted on December 15, 1981.

(2) Commonwealth of Kentucky's Section 111(d) Plan For Existing Municipal Solid Waste Landfills, submitted on December 3, 1998, by the Kentucky Division for Air Quality.

(c) *Designated facilities.* The plan applies to existing facilities in the following categories of sources:

(1) Sulfuric acid plants.

(2) Kraft pulp mills.

(3) Primary aluminum reduction plants.

(4) Existing municipal solid waste landfills.

[47 FR 22956, May 26, 1982, as amended at 64 FR 19293, Apr. 20, 1999]

SULFURIC ACID MIST FROM EXISTING SULFURIC ACID PLANTS

§ 62.4351 Identification of sources.

The plan applies to existing facilities at the following sulfuric acid plant: E.I. du Pont sulfuric acid plant in Wurtland, Ky.

TOTAL REDUCED SULFUR FROM EXISTING KRAFT PULP MILLS

§ 62.4352 Identification of sources.

The plan applies to existing facilities at the following kraft pulp mills:

(a) Westvaco Corp., Fine Papers Division, Wickliffe, Ky.

(b) Willamette Industries, Corrugated Medium Mill and Bleached Pulp Mill, Hawesville, Kentucky.

FLUORIDE EMISSIONS FROM EXISTING PRIMARY ALUMINUM REDUCTION PLANTS

§ 62.4353 Identification of sources.

The plan applies to existing facilities at the following primary aluminum reduction plants:

(a) National Southwire Aluminum, Hawesville, Ky.

(b) Anaconda Company, Aluminum Division, Henderson, Ky.

FLUORIDE EMISSIONS FROM PHOSPHATE FERTILIZER PLANTS

§ 62.4354 Identification of plan—negative declaration.

The Kentucky Department for Natural Resources and Environmental Protection certified in a letter dated August 25, 1978, that Kentucky has no designated facilities in this source category.

LANDFILL GAS EMISSIONS FROM EXISTING MUNICIPAL SOLID WASTE LANDFILLS

§ 62.4355 Identification of sources.

The plan applies to existing municipal solid waste landfills for which construction, reconstruction, or modification was commenced before May 30, 1991, that accepted waste at any time since November 8, 1987, or that have additional capacity available for future waste deposition, as described in 40 CFR part 60, subpart Cc.

[64 FR 19293, Apr. 20, 1999]

EMISSIONS FROM EXISTING MUNICIPAL WASTE COMBUSTORS WITH THE CAPACITY TO BURN GREATER THAN 250 TONS PER DAY OF MUNICIPAL SOLID WASTE

§ 62.4370 Identification of plan—negative declaration.

Letter from the Department for Environmental Protection submitted December 18, 1996 certifying that there are no existing municipal waste combustor units in the State of Kentucky that are subject to part 60, subpart Cb, of this chapter.

[65 FR 33466, May 24, 2000]

AIR EMISSIONS FROM SMALL EXISTING MUNICIPAL WASTE COMBUSTION UNITS

§ 62.4371 Identification of plan—negative declaration.

Letter from the Kentucky Department for Environmental Protection submitted March 5, 2001, certifying that there are no small municipal waste combustion units subject to 40 CFR part 60, subpart BBBB.

[67 FR 273, Jan. 3, 2002]

Subpart T—Louisiana

SOURCE: 44 FR 54053, Sept. 18, 1979, unless otherwise noted.

PLAN FOR CONTROL OF DESIGNATED POLLUTANTS FROM EXISTING FACILITIES (SECTION 111(d) PLAN)

§ 62.4620 Identification of plan.

(a) *Identification of plan.* Louisiana Plan for Control of Designated Pollutants from Existing Facilities (111(d) Plan).

(b) The plan was officially submitted as follows:

(1) Control of sulfuric acid mist from sulfuric acid plants, and fluoride emissions from existing facilities at phosphate fertilizer plants, submitted on July 18, 1978, having been adopted by the State November 30, 1977, and letter dated February 16, 1982.

(2) Control of fluoride emissions from existing facilities at primary aluminum plants, submitted on January 12, 1981, having been adopted by the State on December 11, 1980.

(3) Control of total reduced sulfur from existing facilities at kraft pulp mill plants, submitted in December 1979, having been adopted November 27, 1979, and letter dated February 16, 1982.

(4) Control of landfill gas emissions from existing municipal solid waste landfills, submitted on December 9, 1996 (LAC 33.III.3003.B, Table 2), and revised on December 20, 1998 (LAC 33.III.3003.C.4).

(5) Control of air emissions from designated hazardous/medical/infectious

waste incinerators, submitted by the Louisiana Department of Environmental Quality on December 30, 1998 (LAC 33.III.3003.C.5).

(c) *Designated facilities*. The plan applies to existing facilities in the following categories of sources:

(1) Sulfuric acid plants.

(2) Phosphate fertilizer plants.

(3) Primary aluminum plants.

(4) Kraft pulp mills.

(5) Municipal solid waste landfills.

(6) Hazardous/medical/infectious waste incinerators.

[47 FR 20491—20493, May 12, 1982, as amended at 62 FR 45732, Aug. 29, 1997; 64 FR 32433, June 17, 1999]

§62.4621 Emission standards and compliance schedules.

(a) The requirements of §60.24(b)(2) of this chapter are not met since the test methods and procedures for determining compliance with the sulfuric acid mist emission standards are not specified.

(b) Emissions from sulfuric acid plants must be measured by the methods in appendix A to part 60, or by equivalent or alternative methods as defined in §60.2 (t) and (u) respectively.

§62.4622 Emission inventories, source surveillance, reports.

(a) The requirements of §60.25(a) of this chapter are not met since the emission inventories do not provide information as specified in appendix D to part 60.

(b) The requirements of §60.25(c) of this chapter are not met since the plan does not provide for the disclosure of emission data, as correlated with applicable emission standards, to the general public.

(c) *Regulation for public availability of emission data*. (1) Any person who cannot obtain emission data from the agency responsible for making emission data available to the public, as specified in the applicable plan, concerning emissions from any source subject to emission limitations which are part of the approved plan may request that the appropriate Regional Administrator obtain and make public such data. Within 30 days after receipt of any such written request, the Regional Administrator shall require the owner or operator of any such source to submit information within 30 days on the nature and amounts of emissions from such source and any other information as may be deemed necessary by the Regional Administrator to determine whether such source is in compliance with applicable emission limitations or other control measures that are part of the applicable plan.

(2) Commencing after the initial notification by the Regional Administrator pursuant to paragraph (c)(1) of this section, the owner or operator of the source shall maintain records of the nature and amounts of emissions from such source and any other information as may be deemed necessary by the Regional Administrator to determine whether such source is in compliance with applicable emission limitations or other control measures that are part of the plan. The information recorded shall be summarized and reported to the Regional Administrator, on forms furnished by the Regional Administrator, and shall be submitted within 45 days after the end of the reporting period. Reporting periods are January 1–June 30 and July 1–December 31.

(3) Information recorded by the owner or operator and copies of this summarizing report submitted to the Regional Administrator shall be retained by the owner or operator for 2 years after the date on which the pertinent report is submitted.

(4) Emission data obtained from owners or operators of stationary sources will be correlated with applicable emission limitations and other control measures that are part of the applicable plan and will be available at the appropriate regional office and at other locations in the State designated by the Regional Administrator.

§62.4623 Legal authority.

(a) The requirements of §60.26(a) of this chapter are not met since the plan does not provide adequate legal authority for the State to make emission data, as correlated with applicable emissions standards, available to the general public.

SULFURIC ACID MIST FROM EXISTING SULFURIC ACID PLANTS

§ 62.4624 Identification of sources.

Identification of sources: The plan includes the following sulfuric acid plants:

(1) Agrico Chemical Company in St. James Parish.

(2) Allied Chemical Corporation in Ascension and Iberville Parishes.

(3) Beker Industries in St. Charles Parish.

(4) Cities Services Oil Company in Calcasieu Parish.

(5) E. I. du Pont de Nemours & Company, Inc. in Ascension Parish.

(6) Freeport Chemical Company in St. James Parish.

(7) Freeport Chemical Company in Plaquemines Parish.

(8) Olin Corporation in Caddo Parish.

(9) Stauffer Chemical Company in East Baton Rouge Parish.

[44 FR 54053, Sept. 18, 1979. Redesignated at 47 FR 20491, May 12, 1982]

FLUORIDE EMISSIONS FROM EXISTING PHOSPHATE FERTILIZER PLANTS

§ 62.4625 Identification of sources.

(a) The Plan applies to existing facilities at the following phosphate fertilizer plants:

(1) Agrico Chemical Company at Donaldsville, Louisiana.

(2) Allied Chemical Corporation at Geismar, Louisiana.

(3) Beker Industries at Taft, Louisiana.

(4) Freeport Chemical at Uncle Sam, Louisiana.

(5) Monsanto at Luling, Louisiana.

[47 FR 20491, May 12, 1982]

§ 62.4626 Effective date.

(a) The effective date of the portion of the plan applicable to phosphate fertilizer plants is July 12, 1982.

[47 FR 20491, May 12, 1982]

FLUORIDE EMISSIONS FROM EXISTING PRIMARY ALUMINUM PLANTS

§ 62.4627 Identification of sources.

The plan applies to existing facilities at the following primary aluminum plants:

(1) The Kaiser Plant at Chalmette, Louisiana.

(2) The CONALCO Plant at Lake Charles, Louisiana.

[47 FR 20492, May 12, 1982]

§ 62.4628 Effective date.

The effective date of this portion of the State's plan is July 12, 1982.

[47 FR 20492, May 12, 1982]

TOTAL REDUCED SULFUR EMISSIONS FROM EXISTING KRAFT PULP MILLS

§ 62.4629 Identification of sources.

The plan applies to existing facilities at the following kraft pulp mill plants:

(1) Boise at DeRidder, La.

(2) Boise at Elizabeth, La.

(3) Continental at Hodge, La.

(4) Crown-Zellerbach at Bogalusa, La.

(5) Crown-Zellerbach at St. Francisville, La.

(6) Georgia-Pacific at Port Hudson, La.

(7) International Paper at Bastrop, La.

(8) Olinkraft at West Monroe, La.

(9) Pineville Kraft at Pineville, La.

(10) Western Kraft at Compte, La.

[47 FR 20493, May 12, 1982]

§ 62.4630 Effective date.

The effective date of the portion of the plan applicable to kraft pulp mills is July 12, 1982.

[47 FR 20493, May 12, 1982]

LANDFILL GAS EMISSIONS FROM EXISTING MUNICIPAL SOLID WASTE LANDFILLS

62.4631 Identification of Sources.

The plan applies to all existing municipal solid waste landfills with design capacities greater than 2.5 million megagrams and non-methane organic emissions greater than 50 megagrams

per year as described in 40 CFR part 60, subpart Cc.

[62 FR 54591, Oct. 21, 1997]

62.4632 Effective Date.

The effective date of the portion of the plan applicable to existing municipal solid waste landfills is October 28, 1997.

[62 FR 54591, Oct. 21, 1997]

AIR EMISSIONS FROM HAZARDOUS/MEDICAL/INFECTIOUS WASTE INCINERATORS

§ 62.4633 Identification of sources.

The plan applies to existing hazardous/medical/infectious waste incinerators for which construction, reconstruction, or modification was commenced before June 20, 1996, as described in 40 CFR part 60, subpart Ce.

[64 FR 32433, June 17, 1999]

EFFECTIVE DATE

§ 62.4634 Effective date.

The effective date for the portion of the plan applicable to existing hazardous/medical/infectious waste incinerators is August 16, 1999.

[64 FR 32433, June 17, 1999]

EMISSIONS FROM EXISTING MUNICIPAL WASTE COMBUSTORS WITH THE CAPACITY TO BURN GREATER THAN 250 TONS PER DAY OF MUNICIPAL SOLID WASTE

§ 62.4650 Identification of plan—negative declaration.

Letter From the Department of Environmental Quality submitted May 21, 1996 certifying that there are no existing municipal waste combustor units in the State of Louisiana that are subject to part 60, subpart Cb, of this chapter.

[65 FR 33466, May 24, 2000]

EMISSIONS FROM EXISTING SMALL MUNICIPAL WASTE COMBUSTION UNITS

§ 62.4660 Identification of sources—negative declaration.

Letter from the Louisiana Department of Environmental Quality dated December 20, 2002, certifying that there are no existing small municipal waste combustion units in the State of Louisiana subject to 40 CFR part 60, subpart BBBB.

[68 FR 35302, June 13, 2003]

EFFECTIVE DATE NOTE: At 68 FR 35302, June 13, 2003, Subpart T was amended by adding an undesignated center heading and § 62.4660, effective Aug. 12, 2003.

Subpart U—Maine

PLAN FOR THE CONTROL OF DESIGNATED POLLUTANTS FROM EXISTING FACILITIES (SECTION 111(d) PLAN)

§ 62.4845 Identification of plan.

(a) *Identification of plan.* Maine Plan for the Control of Designated Pollutants from Existing Plants (Section 111(d) Plan).

(b) The plan was officially submitted as follows:

(1) Control of sulfuric acid mist emissions from existing sulfuric acid production units, submitted on November 10, 1988.

(2) Control of total reduced sulfur (TRS) emissions from existing kraft pulp mills, submitted on February 15, 1990.

(3) A revision to the plan to control TRS from existing kraft pulp mills, which extends the final compliance date for brown stock washers to January 1, 1997, was submitted on April 27, 1994.

(4) Control of metals, acid gases, organic compounds and nitrogen oxide emissions from existing municipal waste combustors, submitted on April 15, 1998.

(5) A revision to the plan controlling TRS from existing kraft pulp mills to incorporate the pulp and paper maximum achievable control technology (MACT) requirements that impact TRS emission sources such as brownstock washer systems, low volume high concentration (LVHC) systems, steam strippers, and waste water treatment plants. Changes have also been made to clarify venting allowances and recordkeeping and reporting requirements.

(c) *Designated facilities.* The plan applies to existing facilities in the following categories of sources:

(1) Sulfuric acid plants.

(2) Kraft pulp mills.

(3) Existing municipal waste combustors.

[54 FR 22896, May 30, 1989, as amended at 55 FR 38548, Sept. 19, 1990; 59 FR 50507, Oct. 4, 1994; 63 FR 68397, Dec. 11, 1998; 68 FR 23211, May 1, 2003]

FLUORIDE EMISSIONS FROM EXISTING PRIMARY ALUMINUM PLANTS

§ 62.4875 Identification of sources—negative declaration.

The State Department of Environmental Protection submitted on October 3, 1988, a letter certifying that there are no existing primary aluminum reduction plants in the State subject to part 60, subpart B of this chapter.

[54 FR 9046 Mar. 3, 1989]

SULFURIC ACID MIST FROM EXISTING SULFURIC ACID PLANTS

§ 62.4900 Identification of sources.

The plan applies to the following existing sulfuric acid plants:

(a) Delta Chemical in Searsport, Maine.

[54 FR 22896, May 30, 1989]

TOTAL REDUCED SULFUR FROM EXISTING KRAFT PULP MILLS

§ 62.4925 Identification of sources.

(a) The plan applies to the following existing kraft pulp mills:

(1) International Paper Company in Jay.

(2) S.D. Warren Company in Westbrook.

(3) Boise Cascade in Rumford.

(4) James River Corporation in Old Town.

(5) Georgia-Pacific Corporation in Woodland.

(6) Lincoln Pulp and Paper Company in Lincoln.

[55 FR 38548, Sept. 19, 1990]

FLUORIDE EMISSIONS FROM PHOSPHATE FERTILIZER PLANTS

§ 62.4950 Identification of plan—negative declaration.

The State Department of Environmental Protection submitted on April 19, 1978, a letter certifying that there are no existing phosphate fertilizer plants in the state subject to part 60, subpart B of this chapter.

[44 FR 54052, Sept 18, 1979. Redesignated at 54 FR 22896, May 30, 1989]

METALS, ACID GASES, ORGANIC COMPOUNDS AND NITROGEN OXIDE EMISSIONS FROM EXISTING MUNICIPAL WASTE COMBUSTORS WITH THE CAPACITY TO COMBUST GREATER THAN 250 TONS PER DAY OF MUNICIPAL SOLID WASTE

§ 62.4975 Identification of sources.

The plan applies to the following existing municipal waste combustor facilities:

(a) Penobscot Energy Recovery Company, Orrington, Maine.

(b) Maine Energy Recovery Company, Biddeford, Maine.

(c) Regional Waste Systems, Inc., Portland, Maine.

[63 FR 68397, Dec. 11, 1998]

AIR EMISSIONS FROM EXISTING COMMERCIAL AND INDUSTRIAL SOLID WASTE INCINERATION UNITS

§ 62.4980 Identification of Plan—negative declaration.

On January 24, 2002, the Maine Department of Environmental Protection submitted a letter certifying that there are no existing commercial and industrial solid waste incineration units in the state subject to the emission guidelines under part 60, subpart DDDD of this chapter.

[67 FR 39629, June 10, 2002]

Subpart V—Maryland

AUTHORITY: Clean Air Act, sec. 111(d).

SOURCE: 49 FR 8613, Mar. 8, 1984, unless otherwise noted.

PLAN FOR CONTROL OF DESIGNATED POLLUTANTS FROM EXISTING FACILITIES (SECTION 111(d) PLAN)

§ 62.5100 Identification of plan.

(a) *Identification of plan.* Maryland Plan for Control Designated Pollutants from Existing Facilities (Section 111(d) plan).

(b) The plan was officially submitted as follows:

(1) Control of sulfuric acid mist from sulfuric acid plants, submitted by the Secretary of Health and Mental Hygiene, State of Maryland on August 30, 1978.

(2) Control of TRS emissions from kraft pulp mills, submitted by the Governor of Maryland on May 18, 1981, and approval of a compliance schedule, submitted by the State of Maryland on September 24, 1982.

(3) Control of fluoride emissions from primary aluminum reduction plants, submitted by the Secretary of Health and Mental Hygiene, State of Maryland on January 26, 1984.

(c) *Designated facilities.* The plan applies to existing facilities in the following categories of sources:

(1) Sulfuric acid plants;

(2) Kraft pulp mills.

(3) Primary aluminum reduction plants.

(d) *Submittal of plan revisions*—On April 2, 1992, Maryland submitted revisions to COMAR 26.11.14.05A. and .05B. governing the testing, monitoring, and reporting of total reduced sulfur (TRS) emissions from kraft pulp mills.

[49 FR 8613, Mar. 8, 1984, as amended at 50 FR 9628, Mar. 11, 1985; 64 FR 59650, Nov. 3, 1999]

SULFURIC ACID MIST FROM EXISTING SULFURIC ACID PLANTS

§62.5101 Identification of sources.

(a) The plan applies to the following existing sulfuric acid plants:

(1) Olin Corporation, Baltimore City, Maryland.

TOTAL REDUCED SULFUR EMISSIONS FROM EXISTING KRAFT PULP MILLS

§62.5102 Identification of sources.

(a) The plan applies to existing facilities at the following kraft pulp mills:

(1) Westvaco Fine Papers Divisions, Luke, Maryland.

FLUORIDE EMISSIONS FROM PRIMARY ALUMINUM REDUCTION PLANTS

§62.5103 Identification of sources.

(a) The plan applies to the following existing primary aluminum reduction plants:

(1) Eastalco Aluminum Plant, Frederick, Maryland.

[50 FR 9628, Mar. 11, 1985]

METALS, ACID GASES, ORGANIC COMPOUNDS AND NITROGEN OXIDE EMISSIONS FROM EXISTING MUNICIPAL WASTE COMBUSTORS WITH A UNIT CAPACITY GREATER THAN 250 TONS PER DAY

§62.5110 Identification of plan.

111(d)/129 plan for municipal waste combustors (MWCs) with a unit capacity greater than 250 tons per day (TPD) and the associated Code of Maryland Regulation (COMAR 26.11.08), as submitted by the Air and Radiation Management Administration, Maryland Department of the Environment, on December 4, 1997, and as amended on October 7, 1998.

[64 FR 19922, Apr. 23, 1999]

§62.5111 Identification of sources.

The plan applies to all existing MWC facilities with a MWC unit capacity greater than 250 TPD of municipal solid waste.

[64 FR 19922, Apr. 23, 1999]

§62.5112 Effective date.

The effective date of the 111(d)/129 plan is June 22, 1999.

[64 FR 19922, Apr. 23, 1999]

LANDFILL GAS EMISSIONS FROM EXISTING MUNICIPAL SOLID WASTE LANDFILLS (SECTION 111(d) PLAN)

SOURCE: Sections 62.5150 through 62.5152 appear at 64 FR 48717, Sept. 8, 1999, unless otherwise noted.

§62.5150 Identification of plan.

On March 23, 1999, the Maryland Department of the Environment submitted to the Environmental Protection Agency a 111(d) Plan to implement and enforce the requirements of 40 CFR part 60, subpart Cc, Emissions Guidelines for Municipal Solid Waste Landfills.

§62.5151 Identification of sources.

The plan applies to all Maryland existing municipal solid waste landfills for which construction, reconstruction,

or modification was commenced before May 30, 1991 and that accepted waste at any time since November 8, 1987, or that have additional capacity available for future waste deposition, as described in 40 CFR part 60, subpart Cc.

§ 62.5152 Effective date.

The effective date of the plan for municipal solid waste landfills is November 8, 1999.

EMISSIONS FROM EXISTING HOSPITAL/MEDICAL/INFECTIOUS WASTE INCINERATORS (HMIWIS)—SECTION 111(D)/129 PLAN

SOURCE: Sections 62.5160 through 62.5162 appear at 65 FR 53608, Sept. 5, 2000, unless otherwise noted.

§ 62.5160 Identification of plan.

Section 111(d)/129 plan for HMIWIs and the associated Code of Maryland (COMAR) 26.11.08 regulations, as submitted on April 14, 2000.

§ 62.5161 Identification of sources.

The plan applies to all existing HMIWIs located in Maryland for which construction was commenced on or before June 20, 1996.

§ 62.5162 Effective date.

The effective date of the plan is October 20, 2000.

Subpart W—Massachusetts

PLAN FOR THE CONTROL OF DESIGNATED POLLUTANTS FROM EXISTING FACILITIES (SECTION 111(D) PLAN)

§ 62.5340 Identification of Plan.

(a) *Identification of Plan.* Massachusetts Plan for the Control of Designated Pollutants from Existing Plants (Section 111(d) Plan).

(b) The plan was officially submitted as follows:

(1) Control of metals, acid gases, organic compounds and nitrogen oxide emissions from existing municipal waste combustors, originally submitted on January 11, 1999 and amended on November 16, 2001. The Plan does not include: the site assignment provisions of 310 CMR 7.08(2)(a); the definition of ''materials separation plan'' at 310 CMR 7.08(2)(c); and the materials separation plan provisions at 310 CMR 7.08(2)(f)(7).

(2) [Reserved]

(c) *Designated facilities.* The plan applies to existing sources in the following categories of sources:

(1) Municipal waste combustors.

(2) [Reserved]

[67 FR 62896, Oct. 9, 2002]

FLUORIDE EMISSIONS FROM PHOSPHATE FERTILIZER PLANTS

§ 62.5350 Identification of plan—negative declaration.

The State Department of Environmental Quality Engineering submitted on April 12, 1978, a letter certifying that there are no existing phosphate fertilizer plants in the state subject to part 60, subpart B of this chapter.

[44 FR 54052, Sept 18, 1979]

SULFURIC ACID MIST EMISSIONS FROM EXISTING SULFURIC ACID PLANTS

§ 62.5351 Identification of plan—negative declaration.

On February 18, 1986, the Commonwealth of Massachusetts submitted a letter certifying that there are no existing sulfuric acid plants in the Commonwealth of Massachusetts.

[51 FR 40801, Nov. 10, 1986]

TOTAL REDUCED SULFUR EMISSIONS FROM EXISTING KRAFT PULP MILLS

§ 62.5375 Identification of plan—negative declaration.

The State Department of Environmental Quality Engineering submitted on July 31, 1979, a letter certifying that there are no existing kraft pulp mills in the State subject to part 60, subpart B of this chapter.

[54 FR 9047, Mar. 3, 1989]

FLUORIDE EMISSIONS FROM EXISTING PRIMARY ALUMINUM PLANTS

§ 62.5400 Identification of plan—negative declaration.

The State Department of Environmental Quality Engineering submitted on January 18, 1989, a letter certifying

that there are no existing primary aluminum reduction plants in the State subject to part 60, subpart B of this chapter.

[54 FR 9047, Mar. 3, 1989]

METALS, ACID GASES, ORGANIC COMPOUNDS AND NITROGEN OXIDE EMISSIONS FROM EXISTING MUNICIPAL WASTE COMBUSTORS WITH THE CAPACITY TO COMBUST GREATER THAN 250 TONS PER DAY OF MUNICIPAL SOLID WASTE

§62.5425 Identification of sources.

(a) The plan applies to the following existing municipal waste combustor facilities:

(1) Fall River Municipal Incinerator in Fall River.

(2) Covanta Haverhill, Inc., in Haverhill.

(3) American Ref-Fuel of SEMASS, L.P. in Rochester.

(4) Wheelabrator Millbury Inc., in Millbury.

(5) Wheelabrator Saugus, J.V., in Saugus.

(6) Wheelabrator North Andover Inc., in North Andover.

(b) [Reserved]

[67 FR 62896, Oct. 9, 2002]

Subpart X—Michigan

FLUORIDE EMISSIONS FROM PHOSPHATE FERTILIZER PLANTS

§62.5600 Identification of plan—negative declaration.

The State Department of Resources submitted on April 18, 1977, a letter certifying that there are no existing phosphate fertilizer plants in the State subject to part 60, subpart B of this chapter.

Subpart Y—Minnesota

FLUORIDE EMISSIONS FROM PHOSPHATE FERTILIZER PLANTS

§62.5850 Identification of plan—negative declaration.

The State Pollution Control Agency submitted on April 7, 1977, a letter certifying that there are no existing phosphate fertilizer plants in the State subject to part 60, subpart B of this chapter.

LANDFILL GAS EMISSIONS FROM EXISTING MUNICIPAL SOLID WASTE LANDFILLS

§62.5860 Identification of plan.

''Section 111(d) Plan for Municipal Solid Waste Landfills,'' submitted by the State on March 4, 1997.

[63 FR 40052, July 27, 1998]

§62.5861 Identification of sources.

The plan applies to all existing municipal solid waste landfills for which construction, reconstruction, or modification was commenced before May 30, 1991 that accepted waste at any time since November 8, 1987 or that have additional capacity available for future waste deposition, as described in 40 CFR part 60, subpart Cc.

[63 FR 40052, July 27, 1998]

§62.5862 Effective date.

The effective date of the plan for municipal solid waste landfills is September 25, 1998.

[63 FR 40053, July 27, 1998]

EXISTING LARGE MUNICIPAL WASTE COMBUSTORS

§62.5870 Identification of plan.

''Section 111(d) Plan for Implementing the Large Municipal Waste Combustor Emission Guidelines,'' submitted by the State on April 28, 1998. The rules being approved as part of this plan are being approved for their applicability to large municipal waste combustors in Minnesota and should apply only to these sources.

[63 FR 43083, Aug. 12, 1998]

§62.5871 Identification of sources.

The plan applies to all existing municipal waste combustor units with the design capacity of $93.75*10^6$ Btu/hr or more. This is the same as having an applicability threshold of the capacity to process 250 tons per day or more of municipal solid waste.

[63 FR 43083, Aug. 12, 1998]

§ 62.5872 Effective date.

The effective date of the plan for existing large waste combustors is October 13, 1998.

[63 FR 43083, Aug. 12, 1998]

Subpart Z—Mississippi

PLAN FOR THE CONTROL OF DESIGNATED POLLUTANTS FROM EXISTING FACILITIES (SECTION 111(d) PLAN)

SOURCE: 47 FR 29235, July 6, 1982, unless otherwise noted.

§ 62.6100 Identification of plan.

(a) *Identification of plan.* Untitled (Section 111(d) Plan).

(b) The plan was officially submitted as follows:

(1) Control of sulfuric acid mist emissions from existing facilities at sulfuric acid plants, submitted on September 17, 1981.

(2) Control of total reduced sulfur emissions from existing kraft pulp mills, submitted on October 30, 1987.

(3) Adopted State Plan for Control of Air Emissions from Existing Hospital/Medical/Infectious Waste Incinerators, submitted on May 5, 1999, by the Mississippi Department of Environmental Quality.

(c) *Designated facilities.* The plan applies to existing facilities in the following categories of sources:

(1) Sulfuric acid plants.

(2) Phosphate fertilizer plants.

(3) Kraft pulp mills.

(4) Existing hospital/medical/infectious waste incinerators.

[47 FR 29235, July 6, 1982, as amended at 54 FR 7771, Feb. 23, 1989; 65 FR 18255, Apr. 7, 2000]

SULFURIC ACID MIST FROM EXISTING SULFURIC ACID PLANTS

§ 62.6110 Identification of sources.

The plan applies to existing plants at the following locations: Sulfur burning plant and oleum plant of Mississippi Chemical Corporation in Pascagoula.

FLUORIDE EMISSIONS FROM PHOSPHATE FERTILIZER PLANTS

§ 62.6120 Identification of sources.

The plan applies to existing facilities at the following phosphate fertilizer plants.

(1) Mississippi Chemical Corporation in Pascagoula.

FLUORIDE EMISSIONS FROM PRIMARY ALUMINUM REDUCTION PLANTS

§ 62.6121 Identification of sources—negative declaration.

The Mississippi Bureau of Pollution Control submitted on March 6, 1985, a letter certifying that there are no existing primary aluminum reduction plants in the State subject to part 60, subpart B of this chapter.

[50 FR 26204, June 25, 1985]

TOTAL REDUCED SULFUR EMISSIONS FROM KRAFT PULP MILLS

§ 62.6122 Identification of sources.

The plan applies to existing facilities at the following kraft pulp mills:

(a) Georgia-Pacific Corporation, Monticello.

(b) International Paper Company, Moss Point.

(c) International Paper Company, Natchez.

(d) International Paper Company, Vicksburg.

[54 FR 7771, Feb. 23, 1989]

MUNICIPAL WASTE COMBUSTORS

§ 62.6123 Identification of sources—negative declaration.

The Mississippi Bureau of Pollution Control submitted on August 6, 1991, a letter certifying that there are no municipal waste combustors in the State subject to part 60, subpart B of this chapter.

[57 FR 43405, Sept. 21, 1992]

AIR EMISSIONS FROM HOSPITAL/MEDICAL/INFECTIOUS WASTE INCINERATORS

§ 62.6124 Identification of sources.

The plan applies to existing hospital/medical/infectious waste incinerators for which construction, reconstruction, or modification was commenced before

June 20, 1996, as described in 40 CFR part 60, subpart Ce.

[65 FR 18255, Apr. 7, 2000]

§ 62.6125 Identification of plan—negative declaration.

Letter from the Department of Environmental Quality submitted September 24, 1997 certifying that there are no existing municipal waste combustor units in the State of Mississippi that are subject to part 60, subpart Cb, of this chapter.

[65 FR 33466, May 24, 2000]

AIR EMISSIONS FROM SMALL EXISTING MUNICIPAL WASTE COMBUSTION UNITS

§ 62.6126 Identification of plan—negative declaration.

Letter from the Mississippi Department of Environmental Quality submitted March 27, 2002, certifying that there are no small municipal waste combustion units subject to 40 CFR part 60, subpart BBBB.

[67 FR 67317, Nov. 5, 2002]

AIR EMISSIONS FROM COMMERCIAL AND INDUSTRIAL SOLID WASTE INCINERATION (CISWI) UNITS—SECTION 111(D)/129 PLAN

§ 62.6127 Identification of Sources.

The Plan applies to existing Commercial and Industrial Solid Waste Incineration Units that Commenced Construction On or Before November 30, 1999.

[68 FR 25293, May 12, 2003]

EFFECTIVE DATE NOTE: At 68 FR 25293, May 12, 2003, § 62.6127 and the undesignated center heading were added, effective July 11, 2003.

Subpart AA—Missouri

SOURCE: 51 FR 8828, Mar. 14, 1986, unless otherwise noted.

PLAN FOR THE CONTROL OF DESIGNATED POLLUTANTS FROM EXISTING FACILITIES (SECTION 111(d) PLAN)

§ 62.6350 Identification of plan.

(a) *Identification of plan.* Missouri Plan for Control of Designated Pollutants from Existing Facilities (Section 111(d) Plan).

(b) The plan was officially submitted as follows:

(1) Control of fluoride emissions from existing facilities at phosphate fertilizer plants, and fluoride emissions from existing facilities at primary aluminum reduction plants, submitted on September 22, 1981, having been adopted by the State on June 17 and June 21, 1981. A letter conveying additional information regarding this plan was submitted on January 3, 1985.

(2) Control of sulfuric acid mist from existing facilities at sulfuric acid production plants, submitted on March 12, 1979, having been adopted by the State in 1967 and 1971. A letter providing additional information regarding this plan was submitted on January 3, 1985.

(3) A revision to Missouri's 111(d) plan for Sulfuric Acid Mist from Existing Sulfuric Acid Production Plants which was effective on August 30, 1996. This revision incorporates the 111(d) requirements from two existing regulations into a new consolidated regulation.

(c) *Designated facilities.* The plan applies to existing facilities in the following categories of sources:

(1) Phosphate fertilizer plants.

(2) Primary aluminum reduction plants.

(3) Sulfuric acid production plants.

[51 FR 8828, Mar. 14, 1986, as amended at 63 FR 45729, Aug. 27, 1998]

FLUORIDE EMISSIONS FROM EXISTING PHOSPHATE FERTILIZER PLANTS

§ 62.6351 Identification of sources.

The plan applies to existing facilities at the following phosphate fertilizer plant:

Farmers Chemical Company, Joplin, Missouri

FLOURIDE EMISSIONS FROM EXISTING PRIMARY ALUMINUM REDUCTION PLANTS

§ 62.6352 Identification of sources.

The plan applies to existing facilities at the following primary aluminum reduction plant:

Noranda Aluminum, Inc., New Madrid, Missouri

SULFURIC ACID MIST FROM EXISTING SULFURIC ACID PRODUCTION PLANTS

§ 62.6353 Idenification of sources.

The plan applies to existing facilities at the following sulfuric acid production plant:

W.R. Grace and Company, Joplin, Missouri

TOTAL REDUCED SULFUR EMISSIONS FROM EXISTING KRAFT PULP MILLS

§ 62.6354 Identification of plan—negative declaration.

Letter from the Director of the Missouri Department of Natural Resources submitted on May 14, 1982, certifying that there are no kraft pulp mills in the State subject to part 60, subpart B of this chapter.

EMISSIONS FROM EXISTING MUNICIPAL WASTE COMBUSTORS WITH THE CAPACITY TO BURN GREATER THAN 250 TONS PER DAY OF MUNICIPAL SOLID WASTE

§ 62.6355 Identification of plan—negative declaration.

Letter from the Director of the Air Pollution Control Program of the Department of Natural Resources submitted May 23, 1991, certifying that there are no existing municipal waste combustors in the state of Missouri subject to this 111(d) requirement.

[56 FR 56321, Nov. 4, 1991]

EMISSIONS FROM EXISTING MUNICIPAL WASTE COMBUSTORS WITH THE CAPACITY TO BURN GREATER THAN 35 MEGAGRAMS PER DAY OF MUNICIPAL SOLID WASTE

§ 62.6356 Identification of plan—negative declaration.

Letter from the Air Pollution Control Program of the Department of Natural Resources submitted June 3, 1996, certifying that there are no municipal waste combustors in the state of Missouri subject to part 60, subpart Cb of this chapter.

[62 FR 41874, Aug. 4, 1997]

AIR EMISSIONS FROM EXISTING MUNICIPAL SOLID WASTE LANDFILLS

§ 62.6357 Identification of plan.

(a) *Identification of plan.* Missouri plan for control of landfill gas emissions from existing municipal solid waste landfills and associated state regulations submitted on January 26, 1998.

(b) *Identification of sources.* The plan applies to all existing municipal solid waste landfills for which construction, reconstruction, or modification was commenced before May 30, 1991, that accepted waste at any time since November 8, 1987, or that have additional capacity available for future waste deposition, and have design capacities greater than 2.5 million megagrams and nonmethane organic emissions greater than 50 megagrams per year, as described in 40 CFR part 60, subpart Cc.

(c) *Effective date.* The effective date of the plan for municipal solid waste landfills is June 23, 1998.

(d) Amended plan for the control of air emissions from Municipal Solid Waste Landfills submitted by the Missouri Department of Natural Resources on September 8, 2000. The effective date of the amended plan is January 16, 2001.

[63 FR 20321, Apr. 24, 1998, as amended at 65 FR 68905, Nov. 15, 2000]

AIR EMISSIONS FROM EXISTING HOSPITAL/MEDICAL/INFECTIOUS WASTE INCINERATORS

§ 62.6358 Identification of plan.

(a) *Identification of plan.* Missouri plan for the control of air emissions from hospital/medical/infectious waste incinerators submitted by the Missouri Department of Natural Resources on June 15, 1999.

(b) *Identification of sources.* The plan applies to existing hospital/medical/infectious waste incinerators constructed on or before June 20, 1996.

(c) *Effective date.* The effective date of the plan is October 18, 1999.

(d) Amended plan for the control of air emissions from Hospital/Medical/Infectious Waste Incinerators submitted by the Missouri Department of Natural

Resources on July 13, 2001. The effective date of the amended plan is December 11, 2001.

[64 FR 45187, Aug. 19, 1999, as amended at 66 FR 52062, Oct. 12, 2001]

AIR EMISSIONS FROM SMALL EXISTING MUNICIPAL WASTE COMBUSION UNITS

§62.6359 Identification of plan—negative declaration.

Letter from the Missouri Department of Natural Resources submitted March 22, 2001, certifying that there are no small municipal waste combustion units subject to 40 CFR part 60, subpart BBBB.

[66 FR 46961, Sept. 10, 2001]

AIR EMISSIONS FROM EXISTING COMMERCIAL AND INDUSTRIAL SOLID WASTE INCINERATION UNITS

§62.6360 Identification of plan—negative declaration.

Letter from the Missouri Department of Natural Resources submitted May 9, 2001, certifying that there are no commercial and industrial solid waste incineration units subject to 40 CFR part 60, subpart DDDD.

[67 FR 4181, Jan. 29, 2002]

Subpart BB—Montana

LANDFILL GAS EMISSIONS FROM EXISTING MUNICIPAL SOLID WASTE LANDFILLS

§62.6600 Identification of plan.

''Section 111(d) Plan for Municipal Solid Waste Landfills'' and the associated State regulations in sections 17.8.302(1)(j) and 17.8.340 of the Administrative Rules of Montana, submitted by the State on July 2, 1997.

[63 FR 36861, July 8, 1998]

§62.6601 Identification of sources.

The plan applies to all existing municipal solid waste landfills for which construction, reconstruction, or modification was commenced before May 30, 1991 that accepted waste at any time since November 8, 1987 or that have additional capacity available for future waste deposition, as described in 40 CFR part 60, subpart Cc.

[63 FR 36861, July 8, 1998]

§62.6602 Effective date.

The effective date of the plan for municipal solid waste landfills is September 8, 1998.

[63 FR 36861, July 8, 1998]

AIR EMISSIONS FROM HOSPITAL/MEDICAL/INFECTIOUS WASTE INCINERATORS

SOURCE: Sections 62.6610 through 62.6612 appear at 65 FR 38740, June 22, 2000, unless otherwise noted.

§62.6610 Identification of plan.

Section 111(d) Plan for Hospital/Medical/Infectious Waste Incinerators and the associated State regulation in sections 17.8.302(1)(k) and 17.8.340 of the Administrative Rules of Montana, submitted by the State on January 19, 1999.

§62.6611 Identification of sources.

The plan applies to all existing hospital/medical/infectious waste incinerators for which construction was commenced on or before June 20, 1996, as described in 40 CFR part 60, subpart Ce.

§62.6612 Effective date.

The effective date for the portion of the plan applicable to existing hospital/medical/infectious waste incinerators is August 21, 2000.

FLUORIDE EMISSIONS FROM EXISTING PHOSPHATE FERTILIZER PLANTS

§62.6613 Identification of plan—negative declaration.

The Montana Department of Environmental Quality certified in a letter dated February 14, 2001, that there are no phosphate fertilizer plants in Montana that meet the definition of affected facility under any of the subparts T, U, V, W or X. Additionally, there are no phosphate fertilizer plants in Montana that meet the definition of affected facility under any of the subparts T, U, V, W, or X, constructed before October 22, 1974, and that have not reconstructed or modified since 1974.

[66 FR 42439, Aug. 13, 2001]

EMISSIONS FROM EXISTING MUNICIPAL WASTE COMBUSTORS WITH THE CAPACITY TO BURN GREATER THAN 250 TONS PER DAY OF MUNICIPAL SOLID WASTE

§ 62.6620 Identification of plan—negative declaration.

Letter from the Department of Environmental Quality submitted June 3, 1997 certifying that there are no existing municipal waste combustor units in the State of Montana that are subject to part 60, subpart Cb, of this chapter.

[65 FR 33467, May 24, 2000]

Subpart CC—Nebraska

SOURCE: 49 FR 7234, Feb. 28, 1984, unless otherwise noted.

FLUORIDE EMISSIONS FROM EXISTING PHOSPHATE FERTILIZER PLANTS

§ 62.6850 Identification of plan—negative declaration.

Letter from the Director of the Department of Environmental Control submitted on May 4, 1977, certifying that there are no phosphate fertilizer plants in the State of Nebraska.

SULFURIC ACID MIST EMISSIONS FROM EXISTING SULFURIC ACID PLANTS

§ 62.6875 Identification of plan—negative declaration.

Letter from the Chief of the Air Pollution Control Division of the Department of Environmental Control submitted on December 9, 1977, certifying that there are no existing sulfuric acid plants in the State of Nebraska.

TOTAL REDUCED SULFUR EMISSIONS FROM EXISTING KRAFT PULP MILLS

§ 62.6880 Identification of plan—negative declaration.

Letter from the Chief of the Air Pollution Control Division of the Department of Environmental Control submitted on March 16, 1984, certifying that there are no existing kraft pulp mills in the State of Nebraska, subject to part 60, subpart B of this chapter.

[49 FR 43058, Oct. 26, 1984]

FLUORIDE EMISSIONS FROM EXISTING PRIMARY ALUMINUM REDUCTION PLANTS

§ 62.6910 Identification of plan—negative declaration.

Letter from the Chief of the Air Pollution Control Division of the Department of Environmental Control submitted on March 16, 1984, certifying that there are no existing primary aluminum reduction plants in the State of Nebraska, subject to part 60, subpart B of this chapter.

[49 FR 43058, Oct. 26, 1984]

EMISSIONS FROM EXISTING MUNICIPAL WASTE COMBUSTORS WITH THE CAPACITY TO BURN GREATER THAN 250 TONS PER DAY OF MUNICIPAL SOLID WASTE

§ 62.6911 Identification of plan—negative declaration.

Letter from the Chief of the Air Quality Division of the Department of Environmental Control submitted April 1, 1991, certifying that there are no existing municipal waste combustors in the state of Nebraska subject to this 111(d) requirement.

[56 FR 56321, Nov. 4, 1991]

EMISSIONS FROM EXISTING MUNICIPAL WASTE COMBUSTORS WITH THE CAPACITY TO BURN GREATER THAN 35 MEGAGRAMS PER DAY OF MUNICIPAL SOLID WASTE

§ 62.6912 Identification of plan—negative declaration.

Letter from the Air Quality Section of the Nebraska Department of Environmental Quality submitted May 13, 1996, certifying that there are no municipal waste combustors in the state of Nebraska subject to part 60, subpart Cb of this chapter.

[62 FR 41874, Aug. 4, 1997]

AIR EMISSIONS FROM EXISTING MUNICIPAL SOLID WASTE LANDFILLS

§ 62.6913 Identification of plan.

(a) *Identification of plan.* Nebraska plan for control of landfill gas emissions from existing municipal solid waste landfills and associated state regulations submitted on January 6, 1998.

(b) *Identification of sources.* The plan applies to all existing municipal solid waste landfills for which construction, reconstruction, or modification was commenced before May 30, 1991, that accepted waste at any time since November 8, 1987, or that have additional capacity available for future waste deposition, and have design capacities greater than 2.5 million megagrams and nonmethane organic emissions greater than 50 megagrams per year, as described in 40 CFR part 60, subpart Cc.

(c) *Effective date.* The effective date of the plan for municipal solid waste landfills is June 22, 1998.

[63 FR 20101, Apr. 23, 1998]

AIR EMISSIONS FROM EXISTING HOSPITAL/MEDICAL/INFECTIOUS WASTE INCINERATORS

§62.6914 Identification of plan.

(a) *Identification of plan.* Nebraska plan for the control of air emissions from hospital/medical/infectious waste incinerators submitted by the Nebraska Department of Environmental Quality on July 30, 1999.

(b) *Identification of sources.* The plan applies to existing hospital/medical/infectious waste incinerators constructed on or before June 20, 1996.

(c) *Effective date.* The effective date of the plan is January 18, 2000.

[64 FR 62117, Nov. 16, 1999]

AIR EMISSIONS FROM SMALL EXISTING MUNICIPAL WASTE COMBUSTION UNITS

§62.6915 Identification of plan—negative declaration.

Letter from the Nebraska Department of Environmental Quality submitted June 8, 2001, certifying that there are no small municipal waste combustion units subject to 40 CFR part 60, subpart BBBB.

[66 FR 46961, Sept. 10, 2001]

AIR EMISSIONS FROM EXISTING COMMERCIAL AND INDUSTRIAL SOLID WASTE INCINERATION UNITS

§62.6916 Identification of plan—negative declaration.

Letter from the Nebraska Department of Environmental Quality submitted June 8, 2001, certifying that there are no commercial and industrial solid waste incineration units subject to 40 CFR part 60, subpart DDDD.

[67 FR 4181, Jan. 29, 2002; 67 FR 13272, Mar. 22, 2002]

Subpart DD—Nevada

SOURCE: 64 FR 50768, Sept. 20, 1999, unless otherwise noted.

LANDFILL GAS EMISSIONS FROM EXISTING MUNICIPAL SOLID WASTE LANDFILLS

§62.7100 Identification of plan.

(a) The Washoe County Department of Health submitted on May 7, 1997 a letter certifying that there are no existing municipal solid waste landfills in Washoe County subject to 40 CFR part 60, subpart Cc.

(b) The Nevada Division of Environmental Protection submitted on June 3, 1998 and May 21, 1999 the State of Nevada's Section 111(d) Plan for Existing Municipal Solid Waste Landfills.

§62.7101 Identification of sources.

The plan applies to all existing municipal solid waste landfills for which construction, reconstruction, or modification was commenced before May 30, 1991, as described in 40 CFR part 60, subpart Cc.

§62.7102 Effective date.

The effective date of EPA approval of the plan is November 19, 1999.

EMISSIONS FROM EXISTING MUNICIPAL WASTE COMBUSTORS WITH THE CAPACITY TO BURN GREATER THAN 250 TONS PER DAY OF MUNICIPAL SOLID WASTE

§62.7120 Identification of plan—negative declaration.

Letter from the Nevada Division of Environmental Protection submitted March 26, 1997 certifying that there are no existing municipal waste combustor units in the State of Nevada that are subject to part 60, subpart Cb, of this chapter.

[65 FR 33467, May 24, 2000]

EMISSIONS FROM SMALL EXISTING MUNICIPAL WASTE COMBUSTION UNITS

§ 62.7125 Identification of plan—negative declaration.

Letter from the Nevada Division of Environmental Protection, submitted on March 26, 1997, certifying that there are no existing municipal waste combustion units subject to part 60, subpart BBBB, of this chapter.

[66 FR 67098, Dec. 28, 2001]

Subpart EE—New Hampshire

PLAN FOR THE CONTROL OF DESIGNATED POLLUTANTS FROM EXISTING FACILITIES (SECTION 111(d) PLAN)

§ 62.7325 Identification of plan.

(a) *Identification of plan.* New Hampshire Plan for the Control of Designated Pollutants from Existing Plants (Section 111(d) Plan).

(b) The plan was officially submitted as follows:

(1) Control of total reduced sulfur (TRS) emissions from existing kraft pulp mills, submitted on January 3, 1992.

(2) Control of air emissions from existing hospital/medical/infectious waste incinerators, submitted on June 2, 1999.

(3) Control of air emissions from existing commercial and industrial solid waste incineration units, submitted on August 12, 2002.

(4) Control of air emissions from existing large and small municipal waste combustors, submitted on August 16, 2002.

(c) *Designated facilities.* The plan applies to existing facilities in the following categories of sources:

(1) Kraft pulp mills.

(2) Hospital/medical/infectious waste incinerators.

(3) Commercial and industrial solid waste incineration units

(4) Municipal waste combustors. (i) Large MWCs with a capacity greater than 250 tons per day.

(ii) Small MWCs with a capacity of 250 tons per day or less.

[57 FR 56858, Dec. 1, 1992, as amended at 65 FR 6012, Feb. 8, 2000; 68 FR 6632,6635, Feb. 10, 2003]

FLUORIDE EMISSIONS FROM PHOSPHATE FERTILIZER PLANTS

§ 62.7350 Identification of plan—negative declaration.

The State Air Pollution Control Agency submitted on November 29, 1978, a letter certifying that there are no existing phosphate fertilizer plants in the state subject to part 60, subpart B of this chapter.

[44 FR 54052, Sept 18, 1979]

SULFURIC ACID MIST EMISSIONS FROM SULFURIC ACID PRODUCTION UNITS

§ 62.7375 Identification of plan—negative declaration.

The State Air Pollution Control Agency submitted on November 29, 1978, a letter certifying that there are no existing sulfuric acid plants in the state subject to part 60, subpart B of this chapter.

[44 FR 54052, Sept 18, 1979]

FLUORIDE EMISSIONS FROM EXISTING PRIMARY ALUMINUM PLANTS

§ 62.7400 Identification of sources—negative declaration.

The State Air Pollution Control Agency submitted on January 3, 1989, a letter certifying that there are no existing primary aluminum reduction plants in the State subject to part 60, subpart B of this chapter.

[54 FR 9047, Mar. 3, 1989]

EMISSIONS FROM EXISTING MUNICIPAL SOLID WASTE LANDFILLS

§ 62.7405 Identification of plan-negative declaration.

On July 22, 1998, the New Hampshire Department of Environmental Services submitted a letter certifying that there are no existing municipal solid waste landfills in the state subject to the

emission guidelines under part 60, subpart B of this chapter.

[68 FR 10661, Mar. 6, 2003]

TOTAL REDUCED SULFUR FROM EXISTING KRAFT PULP MILLS

§ 62.7425 Identification of sources.

(a) The plan applies to the following existing kraft pulp mill:

(1) James River Corporation in Berlin.

(2) [Reserved]

(b) [Reserved]

[57 FR 56858, Dec. 1, 1992]

AIR EMISSIONS FROM EXISTING HOSPITAL/MEDICAL/INFECTIOUS WASTE INCINERATORS

§ 62.7450 Identification of sources.

(a) The plan applies to existing hospital/medical/infectious waste incinerators for which construction commenced on or before June 20, 1996.

(b) [Reserved]

[65 FR 6012, Feb. 8, 2000]

AIR EMISSIONS FROM EXISTING COMMERCIAL AND INDUSTRIAL SOLID WASTE INCINERATION UNITS

§ 62.7455 Identification of sources.

(a) The plan applies to the following existing commercial and solid waste incineration unit:

(1) D.D. Bean and Sons, Inc. in Jaffrey.

(2) [Reserved]

(b) [Reserved]

[68 FR 6635, Feb. 10, 2003]

AIR EMISSIONS FROM EXISTING LARGE AND SMALL MUNICIPAL WASTE COMBUSTORS

§ 62.7460 Identification of sources.

(a) The plan applies to the following existing large municipal waste combustor:

(1) The Wheelabrator Concord Co., L.P. in Penacook.

(2) [Reserved]

(b) The plan applies to the following existing small municipal waste combustor:

(1) The Wheelabrator Claremont Co., L.P. in Claremont.

(2) [Reserved]

[68 FR 6632, Feb. 10, 2003]

Subpart FF—New Jersey

FLUORIDE EMISSIONS FROM PHOSPHATE FERTILIZER PLANTS

§ 62.7600 Identification of plan—negative declaration.

The New Jersey Department of Environmental Protection submitted, on May 20, 1977, a letter certifying that there are no existing phosphate fertilizer plants in the State subject to part 60, subpart B of this chapter.

[44 FR 41180, July 16, 1979]

TOTAL REDUCED SULFUR EMISSIONS FROM KRAFT PULP MILLS

§ 62.7601 Identification of plan—negative declaration.

The New Jersey Department of Environmental Protection submitted, on October 18, 1979, a letter certifying that there are no existing kraft pulp mills in the State subject to part 60, subpart B of this chapter.

[45 FR 80826, Dec. 8, 1980; 46 FR 27342, May 19, 1981]

FLUORIDE EMISSIONS FROM PRIMARY ALUMINUM REDUCTION PLANTS

§ 62.7602 Identification of plan—negative declaration.

The New Jersey Department of Environmental Protection submitted, on September 29, 1980, a letter certifying that there are no existing primary aluminum plants in the State subject to part 60 subpart B of this chapter.

[46 FR 30479, June 9, 1981]

METALS, ACID GASES, ORGANIC COMPOUNDS AND NITROGEN OXIDE EMISSIONS FROM EXISTING LARGE MUNICIPAL WASTE COMBUSTORS WITH THE CAPACITY TO COMBUST GREATER THAN 250 TONS PER DAY OF MUNICIPAL SOLID WASTE

§ 62.7603 Identification of plan—delegation of authority.

(a) On November 9, 1999, the New Jersey Department of Environmental Protection (NJDEP) submitted to the Environmental Protection Agency (EPA) a request for delegation of authority to implement and enforce the Federal Plan (40 CFR part 62, subpart FFF) for Large Municipal Waste Combustors (MWC).

(b) Identification of sources: The Federal Plan applies to existing facilities with a MWC unit capacity greater than 250 tons per day of municipal solid waste.

(c) On January 17, 2001, EPA prepared and signed a Memoranda of Agreement (MOA) between the EPA and the NJDEP that defines the policies, responsibilities, and procedures pursuant to 40 CFR part 62, subpart FFF and 40 CFR part 60, subpart Cb, by which the Federal Plan for large MWCs will be administered by both the NJDEP and EPA. On January 24, 2001, Robert C. Shinn, Commissioner NJDEP, signed the MOA, therefore agreeing to the terms and conditions of the MOA and accepting responsibility to enforce and implement the policies, responsibilities, and procedures of the Federal Plan for large MWCs.

[68 FR 10662, Mar. 6, 2003]

Subpart GG—New Mexico

SOURCE: 47 FR 10005, Mar. 9, 1982, unless otherwise noted.

§ 62.7850 Identification of plan.

(a) *Title of plan*. ''State of New Mexico Designated Facility Plan'' (§ 111(d)).

(b) The plan was officially submitted as follows:

(1) Sulfuric acid plants on May 15, 1981.

(c) Affected facilities: The plan includes the following facilities:

(1) Sulfuric acid plants.

SULFURIC ACID MIST EMISSIONS FROM SULFURIC ACID PLANTS

§ 62.7851 Identification of sources.

(a) The plan includes the following sources:

(1) Kerr-McGee Nuclear Corporation in McKinley County.

(2) Climax Chemical Corporation in Lea County.

FLUORIDE EMISSIONS FROM PRIMARY ALUMINUM PLANTS

§ 62.7852 Identification of plan—negative declaration.

The New Mexico Environmental Improvement Division and the Albuquerque Air Pollution Control Division submitted letters of July 8, 1980 and September 23, 1980, respectively, certifying that there are no existing primary aluminum plants in the State subject to part 60, subpart B of this chapter.

TOTAL REDUCED SULFUR EMISSIONS FROM KRAFT PULP MILLS

§ 62.7853 Identification of plan—negative declaration.

The New Mexico Environmental Improvement Division and the Albuquerque Air Pollution Control Division submitted letters of November 5, 1979 and July 8, 1980, respectively, certifying that there are no existing kraft pulp mills in the State subject to part 60, subpart B of this chapter.

FLUORIDE EMISSIONS FROM PHOSPHATE FERTILIZER PLANTS

§ 62.7854 Identification of plan—negative declaration.

The State Department of Health and Social Services submitted on October 31, 1977, a letter certifying that there are no existing phosphate fertilizer plants in the State subject to part 60, subpart B of this chapter.

[43 FR 51393, Nov. 3, 1978. Redesignated at 47 FR 10005, Mar. 9, 1982]

LANDFILL GAS EMISSIONS FROM EXISTING MUNICIPAL SOLID WASTE LANDFILLS

§62.7855 Identification of Plan.

Control of landfill gas emissions from existing municipal solid waste landfills, submitted on January 7, 1997.

[62 FR 54591, Oct. 21, 1997]

§62.7856 Identification of Sources.

The plan applies to all existing municipal solid waste landfills with design capacities greater than or equal to 2.5 million megagrams and non-methane organic emissions greater than or equal to 50 megagrams per year as described in 40 CFR part 60, subpart Cc.

[62 FR 54591, Oct. 21, 1997]

EMISSIONS FROM EXISTING MUNICIPAL WASTE COMBUSTORS WITH THE CAPACITY TO BURN GREATER THAN 250 TONS PER DAY OF MUNICIPAL SOLID WASTE

§62.7857 Identification of plan—negative declaration.

Letter from the Environment Department submitted January 10, 1997 certifying that there are no existing municipal waste combustor units in the State of New Mexico that are subject to part 60, subpart Cb, of this chapter.

[65 FR 33467, May 24, 2000]

EMISSIONS FROM EXISTING LARGE MUNICIPAL WASTE COMBUSTION UNITS

§62.7860 Identification of sources—negative declaration.

Letter from the City of Albuquerque Air Pollution Control Division dated September 10, 2002, certifying that there are no existing municipal waste combustion units in Bernalillo County on lands under the jurisdiction of the Albuquerque/Bernalillo county Air Quality Control Board subject to 40 CFR part 60, subpart Cb.

[68 FR 35302, June 13, 2003]

EFFECTIVE DATE NOTE: At 68 FR 35302, June 13, 2003, §62.7860 and the undesignated center heading were added, effective Aug. 12, 2003.

EMISSIONS FROM EXISTING HOSPITAL/MEDICAL/INFECTIOUS WASTES INCINERATORS

§62.7870 Identification of sources—negative declaration.

Letters from the New Mexico Environment Department and the City of Albuquerque Environmental Health Department dated September 14, 1998, and January 25, 2002, respectively, certifying that there are no existing Hospital/Medical/Infectious Waste Incinerators subject to 40 CFR part 60, subpart Ce, under their jurisdictions in the State of New Mexico.

[68 FR 35302, June 13, 2003]

EFFECTIVE DATE NOTE: At 68 FR 35302, June 13, 2003, §62.7870 and the undesignated center heading were added, effective Aug. 12, 2003.

EMISSIONS FROM EXISTING SMALL MUNICIPAL WASTE COMBUSTION UNITS

§62.7880 Identification of sources—negative declaration.

Letters from the New Mexico Environment Department and the City of Albuquerque Environmental Health Department dated November 13, 2001, and September 10, 2002, respectively, certifying that there are no existing small municipal waste combustion units subject to 40 CFR part 60, subpart BBBB under their jurisdictions in the State of New Mexico.

[68 FR 35302, June 13, 2003]

EFFECTIVE DATE NOTE: At 68 FR 35302, June 13, 2003, §62.7880 and the undesignated center heading were added, effective Aug. 12, 2003.

EMISSIONS FROM EXISTING COMMERCIAL AND INDUSTRIAL SOLID WASTE INCINERATION (CISWI) UNITS

§62.7890 Identification of sources—negative declaration.

Letters from the New Mexico Environment Department dated November 13, 2001 certifying that there are no existing commercial and industrial solid waste incinerators subject to 40 CFR part 60, subpart DDDD under its jurisdiction in the State of New Mexico (excluding tribal lands and Bernalillo County).

[68 FR 35302, June 13, 2003]

EFFECTIVE DATE NOTE: At 68 FR 35302, June 13, 2003, § 62.7890 and the undesignated center heading were added, effective Aug. 12, 2003.

Subpart HH—New York

FLUORIDE EMISSIONS FROM PHOSPHATE FERTILIZER PLANTS

§ 62.8100 Identification of plan—negative declaration.

The New York State Department of Environmental Conservation submitted, on May 12, 1977, a letter certifying that there are no existing phosphate fertilizer plants in the State subject to part 60, subpart B of this chapter.

[44 FR 41180, July 16, 1979]

SULFURIC ACID MIST EMISSIONS FROM EXISTING SULFURIC ACID PLANTS

§ 62.8102 Identification of plan.

(a) [Reserved]

(b) The plan was officially submitted and approved as follows:

(1) Part 224—''Sulfuric Acid and Nitric Acid Plants'' of Title 6 of the New York Code of Rules and Regulations effective May 10, 1984.

(2) Supplemental information submitted on March 29, 1985.

(c) Identification of sources. The plan includes the following plants:

(1) PVS Chemicals, Inc., Buffalo.

(2) Eastman Kodak Company, Rochester.

(d) The plan is approved with the provision that for existing sources any variance or compliance date extension from the provisions of part 224, ''Sulfuric Acid and Nitric Acid Plants,'' or any text method other than specified in 40 CFR part 60, appendix A, approved by the Commissioner of Environmental Conservation must be submitted and approved as a plan revision.

[50 FR 41137, Oct. 9, 1985]

METALS, ACID GASES, ORGANIC COMPOUNDS AND NITROGEN OXIDE EMISSIONS FROM EXISTING MUNICIPAL WASTE COMBUSTORS WITH THE CAPACITY TO COMBUST GREATER THAN 250 TONS PER DAY OF MUNICIPAL SOLID WASTE

§ 62.8103 Identification of plan.

(a) The New York State Department of Environmental Conservation submitted to the Environmental Protection Agency a ''State Plan for implementation and enforcement of 40 CFR part 60, subpart Cb, Emissions Guidelines for Large Municipal Waste Combustors'' on December 15, 1997 and supplemented on June 22, 1998.

(b) Identification of sources: The plan applies to existing facilities with a municipal waste combustor unit capacity greater than 250 tons per day of municipal solid waste.

(c) On October 7, 1998 and supplemented on November 5, 1998, the New York State Department of Environmental Conservation submitted revisions to the State Plan which incorporates emission limits and compliance schedules as amended by EPA on August 25, 1997 (65 FR 45116).

[63 FR 41429, Aug. 4, 1998, as amended at 64 FR 6237, Feb. 9, 1999]

LANDFILL GAS EMISSIONS FROM EXISTING MUNICIPAL SOLID WASTE LANDFILLS

§ 62.8104 Identification of plan.

(a) The New York State Department of Environmental Conservation submitted to the Environmental Protection Agency a ''State Plan for implementation and enforcement of 40 CFR part 60, subpart Cc, Emissions Guidelines for Municipal Solid Waste Landfills' on October 8, 1998.

(b) Identification of sources: The plan applies to all existing municipal solid waste landfills for which construction, reconstruction or modification was commenced before May 30, 1991 that accepted waste at any time since November 8, 1987 or that have additional capacity available for future waste deposition, as described in 40 CFR part 60, subpart Cc.

[64 FR 38586, July 19, 1999]

METALS, ACID GASES, ORGANIC COMPOUNDS, PARTICULATES AND NITROGEN OXIDE EMISSIONS FROM EXISTING HOSPITAL/MEDICAL/INFECTIOUS WASTE INCINERATORS

§ 62.8105 Identification of plan.

(a) The New York State Department of Environmental Conservation submitted to the Environmental Protection Agency a ''State Plan for implementation and enforcement of 40 CFR part 60, subpart CE, Emissions Guidelines for Hospitals/Medical/Infectious Waste Incinerators'' on September 9, 1998 and supplemented on March 11, May 12, and May 15, 1999.

(b) Identification of sources: The plan applies to all existing HMIWI facilities for which construction was commenced on or before June 20, 1996, as described in 40 CFR Part 60, Subpart Ce.

(c) The effective date for the portion of the plan applicable to existing Hospital/Medical/Infectious Waste Incinerators is October 8, 1999.

[64 FR 43094, Aug. 9, 1999]

AIR EMISSIONS FROM EXISTING COMMERCIAL AND INDUSTRIAL SOLID WASTE INCINERATOR UNITS

§ 62.8106 Identification of plan—negative declaration.

Letter from the New York State Department of Environmental Conservation, submitted February 1, 2001, certifying that there are no commercial and industrial solid waste incinerators in the State of New York subject to part 60, subpart DDDD of this chapter.

[66 FR 41148, Aug. 7, 2001]

AIR EMISSIONS FROM EXISTING SMALL MUNICIPAL WASTE COMBUSTION UNITS WITH THE CAPACITY TO COMBUST AT LEAST 35 TONS PER DAY BUT NO MORE THAN 250 TONS PER DAY OF MUNICIPAL SOLID WASTE OR REFUSE DERIVED FUEL AND CONSTRUCTED ON OR BEFORE AUGUST 30, 1999

§ 62.8107 Identification of plan.

(a) On October 22, 2002, the New York State Department of Environmental Conservation submitted to the Environmental Protection Agency ''Section 111(d)/129 State Plan for Implementation of Municipal Waste Combustor Emission Guidelines [Title 40 CFR Part 60, Subparts B and BBBB]''

(b) Identification of sources: The plan applies to all existing Small Municipal Waste Combustion Units with the capacity to combust at least 35 tons per day but no more than 250 tons per day of municipal solid waste or refuse derived fuel and constructed on or before August 30, 1999.

(c) The effective date for the portion of the plan applicable to existing municipal waste combustor units is May 12, 2003.

[68 FR 11981, Mar. 13, 2003]

Subpart II—North Carolina

AUTHORITY: Secs. 110(a) and 111(d), Clean Air Act (42 U.S.C. 7410(a) and 7411(d)).

SOURCE: 48 FR 31403, July 8, 1983, unless otherwise noted.

PLAN FOR THE CONTROL OF DESIGNATED POLLUTANTS FROM EXISTING FACILITIES (SECTION 111(d) PLAN)

§ 62.8350 Identification of plan.

(a) *Identification of plan*. North Carolina Designated Facility Plan (Section 111(d) Plan).

(b) The plan was officially submitted as follows:

(1) Control of sulfuric acid mist emissions from existing sulfuric acid production units, submitted on October 27, 1978, and November 14, 1979.

(2) Control of fluoride emissions from existing primary aluminum plants, submitted on April 16, and August 24, 1981.

(3) Control of total reduced sulfur emissions from existing facilities at kraft pulp mills, submitted on May 2, 1980, and September 24, 1982.

(4) The following revisions to Title 15 of the North Carolina Administrative Code (15 NCAC) were submitted to EPA on July 18, 1986, following adoption by the North Carolina Environmental Management Commission on November 8, 1984: Revised regulations 2D.0517—Emissions From Plants Producing Sulfuric Acid, 2D.0528—Total Reduced Sulfur From Kraft Pulp Mills, and 2D.0529—Fluoride Emissions From Primary Aluminum Reduction Plants.

(5) A change to regulation 15 NCAC 2D.0528, Total Reduced Sulfur from Kraft Pulp Mills, was submitted to EPA April 14, 1987, following adoption by the North Carolina Environmental Management Commission on April 9, 1987.

(6) Revisions to regulations 15 NCAC 2D.0528(c), (f), (g), and (h)—Total Reduced Sulfur from Kraft Pulp Mills, and 2D.0529 (a) and (c)—Flouride Emissions from Primary Aluminum Reduction Plants, were submitted by the North Carolina Department of Natural Resources and Community Development on May 2, 1988, following adoption by the North Carolina Environmental Management Commission on April 14, 1988.

(7) Regulation 1–144, Particulate Matter and Reduced Sulfur Emissions from Pulp and Paper Mills, except 1–144(f) and (g) for the Western North Carolina portion of the North Carolina SIP submitted on June 14, 1990.

(c) *Designated facilities.* The plan applies to existing facilities in the following categories of sources:

(1) Sulfuric acid plants.

(2) Primary aluminum plants.

(3) Kraft pulp mills.

[48 FR 31403, July 8, 1983, as amended at 51 FR 41788, Nov. 19, 1986; 53 FR 31863, Aug. 22, 1988; 53 FR 49882, Dec. 12, 1988; 57 FR 4738, Feb. 7, 1992]

SULFURIC ACID MIST FROM EXISTING SULFURIC ACID PLANTS

§ 62.8351 Identification of sources.

The plan applies to existing facilities at the following sulfuric acid plants:

(a) Sulfur-burning plants operated by:

(1) Texasgulf Inc. in Beaufort County,

(2) Swift Agricultural Chemical Company in Brunswick County,

(3) USS Agri-Chemicals in Brunswick County,

(4) Wright Chemical Corporation in Columbus County, and

(5) Northeast Chemical Company in New Hanover County.

(b) There are no oleum plants.

(c) There are no bound sulfur feedstock plants.

FLUORIDE EMISSIONS FROM EXISTING PRIMARY ALUMINUM PLANTS

§ 62.8352 Identification of sources.

(a) The plan applies to the following existing primary aluminum plant facilities.

(1) Two potlines of prebake cells at the Badin (Stanly County) plant of the Aluminum Corporation of America.

TOTAL REDUCED SULFUR EMISSIONS FROM KRAFT PULP MILLS

§ 62.8353 Identification of sources.

The plan applies to existing facilities at the following kraft pulp mills:

(a) Federal Paper Board in Riegelwood,

(b) Hoerner-Waldorf in Roanoke Rapids,

(c) Champion International in Canton,

(d) Weyerhaeuser in New Bern, and

(e) Weyerhaeuser in Plymouth.

[43 FR 51393, Nov. 3, 1978, as amended at 57 FR 4738, Feb. 7, 1992]

Subpart JJ—North Dakota

SOURCE: 62 FR 65619, Dec. 15, 1997, unless otherwise noted.

LANDFILL GAS EMISSIONS FROM EXISTING MUNICIPAL SOLID WASTE LANDFILLS

§ 62.8600 Identification of plan.

''Section 111(d) Plan for Municipal Solid Waste Landfills'' and the associated State regulation in section 33–15–12–02 of the North Dakota Administrative Code, submitted by the State on September 11, 1997.

§ 62.8601 Identification of sources.

The plan applies to all existing municipal solid waste landfills for which construction, reconstruction, or modification was commenced before May 30, 1991 that accepted waste at any time since November 8, 1987 or that have additional capacity available for future waste deposition, as described in 40 CFR part 60, subpart Cc.

§62.8602 Effective date.

The effective date of the plan for municipal solid waste landfills is February 13, 1998.

AIR EMISSIONS FROM HOSPITAL/MEDICAL/INFECTIOUS WASTE INCINERATORS

SOURCE: Sections 62.8610 through 62.8612 appear at 64 FR 44421, Aug. 16, 1999, unless otherwise noted.

§62.8610 Identification of Plan.

Section 111(d) Plan for Hospital/Medical/Infectious Waste Incinerators and the associated State regulation in section 33–15–12–02 of the North Dakota Administrative Code submitted by the State on October 6, 1998.

§62.8611 Identification of Sources.

The plan applies to all existing hospital/medical/infectious waste incinerators for which construction was commenced on or before June 20, 1996, as described in 40 CFR part 60, subpart Ce.

§62.8612 Effective Date.

The effective date for the portion of the plan applicable to existing hospital/medical/infectious waste incinerators is July 12, 1999.

EMISSIONS FROM EXISTING MUNICIPAL WASTE COMBUSTORS WITH THE CAPACITY TO BURN GREATER THAN 250 TONS PER DAY OF MUNICIPAL SOLID WASTE

§62.8620 Identification of plan—negative declaration.

Letter from the Department of Health submitted May 1, 1996 certifying that there are no existing municipal waste combustor units in the State of North Dakota that are subject to part 60, subpart Cb, of this chapter.

[65 FR 33467, May 24, 2000]

Subpart KK—Ohio

FLUORIDE EMISSIONS FROM PHOSPHATE FERTILIZER PLANTS

§62.8850 Identification of plan—negative declaration.

The Ohio Environmental Protection Agency submitted on December 1, 1977, (resubmitted on April 1, 1985, and April 25, 1985) a letter certifying that there are no existing phosphate fertilizer plants in the State subject to part 60, subpart B of this chapter.

[50 FR 41137, Oct. 9, 1985]

EMISSIONS FROM SMALL MUNICIPAL WASTE COMBUSTION UNITS WITH THE CAPACITY TO COMBUST AT LEAST 35 TONS PER DAY OF MUNICIPAL SOLID WASTE BUT NO MORE THAN 250 TONS PER DAY OF MUNICIPAL SOLID WASTE AND COMMENCED CONSTRUCTION ON OR BEFORE AUGUST 30, 1999

§62.8855 Identification of plan—negative declaration.

On July 25, 2002, the State of Ohio certified to the satisfaction of the United States Environmental Protection Agency that no sources categorized as small Municipal Waste Combustors are located in the State of Ohio.

[67 FR 61272, Sept. 30, 2002]

TOTAL REDUCED SULFUR EMISSIONS FROM KRAFT PULP MILLS

§62.8860 Identification of plan—disapproval.

On December 7, 1984, and April 23, 1986, Ohio submitted its plan for controlling total reduced sulfur from existing kraft pulp mills, including Rules 3745–73–01, 02, 03, and 04. The plan is being disapproved because:

(a) The requirements of §60.24(f) of this chapter are not met because the State failed to justify the application of emission standards less stringent than the Federal emission standards. Additionally, USEPA does not have a bubble policy applicable to 111(d) plans.

(b) The plan does not contain monitoring requirements to ensure proper operation and maintenance of the affected facility as required by §60.25(b) of this chapter.

[55 FR 19884, May 14, 1990]

LANDFILL GAS EMISSIONS FROM EXISTING MUNICIPAL SOLID WASTE LANDFILLS

§62.8870 Identification of plan.

The Ohio State Implementation Plan for implementing the Federal Municipal Solid Waste Landfill Emission

Guidelines including Ohio Administrative Code (OAC) Rules 3745–76–01 through 3745–76–15 was submitted on March 30, 1998.

[63 FR 42238, Aug. 7, 1998]

§ 62.8871 Identification of sources.

The plan applies to all existing municipal solid waste landfills for which construction, reconstruction or modification was commenced before May 30, 1991 that accepted waste at any time since November 8, 1987 or that have additional capacity available for future waste deposition, as described in 40 CFR part 60, subpart Cc.

[63 FR 42238, Aug. 7, 1998]

§ 62.8872 Effective date.

The effective date of the plan for municipal solid waste landfills is October 6, 1998.

[63 FR 42238, Aug. 7, 1998]

Subpart LL—Oklahoma

PLAN FOR THE CONTROL OF DESIGNATED POLLUTANTS FROM EXISTING FACILITIES (SECTION 111(d) PLAN)

§ 62.9100 Identification of plan.

(a) *Identification of plan.* Oklahoma Plan for Control of Designated Pollutants from Existing Facilities (Section 111(d) Plan).

(b) The plan was officially submitted as follows:

(1) Control of sulfuric acid mist from existing sulfuric acid production plants submitted on December 5, 1985, with the corresponding regulation submitted by the Governor of Oklahoma on March 31, 1986.

(2) Control of total reduced sulfur from existing kraft pulp mills was submitted on November 17, 1987, and supplemented on June 1, 1988.

(3) Oklahoma State Plan for Existing Large Municipal Waste Combustors, submitted on July 10, 1998, by the Oklahoma Department of Environmental Quality.

(4) Control of landfill gas emissions from existing municipal solid waste landfills, submitted by the Oklahoma Department of Environmental Quality on December 18, 1998.

(5) Control of air emissions from designated hazardous/medical/infectious waste incinerators, submitted by the Oklahoma Department of Environmental Quality on November 17, 1999 (OAC 252:100–17, Part 7).

(c) *Designated facilities.* The plan applies to existing facilities in the following categories of sources.

(1) Sulfuric acid production plants.

(2) Kraft pulp mills.

(3) Existing municipal waste combustors.

(4) Municipal solid waste landfills.

(5) Hazardous/medical/infectious waste incinerators.

[52 FR 3229, Feb. 3, 1987, as amended at 54 FR 24905, June 12, 1989; 63 FR 59890, Nov. 6, 1998; 64 FR 13519, Mar. 19, 1999; 65 FR 25449, May 2, 2000]

SULFURIC ACID MIST FROM EXISTING SULFURIC ACID PLANTS

§ 62.9110 Identification of sources.

(a) *Identification of sources.* The plan includes the following sulfuric acid production plants.

(1) National Zinc Co. in Bartlesville, Oklahoma.

(2) Tulsa Chemical Co. in Tulsa, Oklahoma.

[52 FR 3230, Feb. 3, 1987]

FLUORIDE EMISSIONS FROM PHOSPHATE FERTILIZER PLANTS

§ 62.9120 Identification of plan—negative declaration.

The State Department of Health submitted on October 25, 1977, a letter certifying that there are no existing phosphate fertilizer plants in the State subject to part 60, subpart B of this chapter.

[43 FR 51393, Nov. 3, 1978. Redesignated at 52 FR 3229, Feb. 3, 1987]

FLUORIDE EMISSIONS FROM PRIMARY ALUMINUM PLANTS

§ 62.9130 Identification of plan—negative declaration.

The Oklahoma State Department of Health submitted a letter on March 3, 1983, certifying that there are no existing primary aluminum reduction

plants in the State of Oklahoma subject to 40 CFR part 60, subpart B, of this chapter.

[48 FR 29854, June 29, 1983. Redesignated at 52 FR 3229, Feb. 3, 1987]

TOTAL REDUCED SULFUR FROM EXISTING KRAFT PULP MILLS

§ 62.9140 Identification of source.

The plan includes the following kraft pulp mill:

(a) Weyerhaeuser Paper Company in Valliant, Oklahoma.

[54 FR 24905, June 12, 1989]

METALS, ACID GASES, ORGANIC COMPOUNDS AND NITROGEN OXIDE EMISSIONS FROM EXISTING MUNICIPAL WASTE COMBUSTORS WITH THE CAPACITY TO COMBUST GREATER THAN 250 TONS PER DAY OF MUNICIPAL SOLID WASTE

§ 62.9150 Identification of sources.

The plan applies to existing facilities with a municipal waste combustor (MWC) unit capacity greater than 250 tons per day of municipal solid waste (MSW) at the following MWC site: Ogden-Martin Systems of Tulsa, Incorporated, 2122 South Yukon Avenue, Tulsa, OK 74107.

[63 FR 59890, Nov. 6, 1998]

LANDFILL GAS EMISSIONS FROM EXISTING MUNICIPAL SOLID WASTE LANDFILLS

§ 62.9160 Identification of sources.

The plan applies to existing municipal solid waste landfills for which construction, reconstruction, or modification was commenced before May 30, 1991, that accepted waste at any time since November 8, 1987, or that have additional capacity available for future waste deposition, as described in 40 CFR part 60, subpart Cc.

[64 FR 13519, Mar. 19, 1999]

AIR EMISSIONS FROM HAZARDOUS/MEDICAL/INFECTIOUS WASTE INCINERATORS

§ 62.9170 Identification of sources.

The plan applies to existing hazardous/medical/infectious waste incinerators for which construction, reconstruction, or modification was commenced before June 20, 1996, as described in 40 CFR part 60, subpart Ce.

[65 FR 25449, May 2, 2000]

EFFECTIVE DATE.

§ 62.9171 Effective date.

The effective date for the portion of the plan applicable to existing hazardous/medical/infectious waste incinerators is July 3, 2000.

[65 FR 25449, May 2, 2000]

EMISSIONS FROM EXISTING SMALL MUNICIPAL WASTE COMBUSTION UNITS

§ 62.9180 Identification of sources—negative declaration.

Letter from the Oklahoma Department of Environmental Quality dated October 2, 2001, certifying that there are no existing small municipal waste combustion units subject to 40 CFR part 60, subpart BBBB, under its jurisdiction in the State of Oklahoma.

[68 FR 35303, June 13, 2003]

EFFECTIVE DATE NOTE: At 68 FR 35303, June 13, 2003, § 62.9180 and the undesignated center heading were added, effective Aug. 12, 2003.

Subpart MM—Oregon

PLAN FOR THE CONTROL OF DESIGNATED POLLUTANTS FROM EXISTING FACILITIES (SECTION 111(d) PLAN)

§ 62.9350 Identification of plan.

(a) *Identification of plan.* Oregon Designated Facility Plan (Section 111(d) Plan).

(b) The plan was officially submitted as follows:

(1) Control of fluoride emissions from phosphate fertilizer plants, submitted by the Oregon State Department of Environmental Quality on June 1, 1977.

(2) Control of sulfuric acid mist emissions from sulfuric acid production units, submitted by the Oregon State Department of Environmental Quality on January 27, 1978.

(3) Control of fluoride emissions from primary aluminum reduction plants, submitted by the Oregon State Department of Environmental Quality on January 13, 1981 and August 9, 1982.

(4) Control of metals, acid gases, organic compounds and nitrogen oxide emissions from existing municipal waste combustors was submitted by Oregon Department of Environmental Quality on December 31, 1996.

(5) Control of landfill gas emission from existing Municipal Solid Waste Landfill plan was submitted by Oregon Department of Environmental Quality on May 14, 1997.

(6) Control of metals, acid gases, organic compounds, particulates and nitrogen oxide emissions from existing Hospital/Medical/Infectious Waste Incinerators was submitted by the Oregon Department of Environmental Quality on October 20, 1998, and November 6, 1998.

(c) *Designated facilities.* The plan applies to existing facilities in the following categories of sources:

(1) Phosphate fertilizer plants.

(2) Sulfuric acid production units.

(3) Primary aluminum reduction plants.

(4) Existing municipal waste combustors.

(5) Existing municipal solid waste landfills.

(6) Existing Hospital/Medical/Infectious Waste Incinerators.

[48 FR 11118, Mar. 16, 1983, as amended at 62 FR 36997, July 10, 1997; 63 FR 34818, June 26, 1998; 65 FR 21362, Apr. 21, 2000]

FLUORIDE EMISSIONS FROM PRIMARY ALUMINUM REDUCTION PLANTS

§ 62.9360 Identification of sources.

The plan applies to existing facilities at the following primary aluminum reduction plants:

(a) Reynolds Metals Company in Troutdale, Oregon

(b) Martin-Marietta in The Dalles, Oregon.

[48 FR 11118, Mar. 16, 1983]

FLOURIDE EMISSIONS FROM PHOSPHATE FERTILIZER PLANTS

§ 62.9500 Identification of sources.

The Oregon State Department of Environmental Quality submitted on June 1, 1977, certification that there are no existing phosphate fertilizer plants in the State subject to part 60, subpart B of this chapter.

[44 FR 76281, Dec. 26, 1979. Redesignated and amended at 48 FR 11118, Mar. 16, 1983]

SULFURIC ACID MIST EMISSIONS FROM SULFURIC ACID PRODUCTION UNITS

§ 62.9501 Identification of sources.

The Oregon State Deparetment of Environmental Quality submitted on January 27, 1978, certification that there are no existing sulfuric acid plants in the State subject to part 60, subpart B of this chapter.

[44 FR 76281, Dec. 26, 1979. Redesignated and amended at 48 FR 11118, Mar. 16, 1983]

METALS, ACID GASES, ORGANIC COMPOUNDS AND NITROGEN OXIDE EMISSIONS FROM EXISTING MUNICIPAL WASTE COMBUSTORS WITH THE CAPACITY TO COMBUST GREATER THAN 250 TONS PER DAY OF MUNICIPAL SOLID WASTE

§ 62.9505 Identification of sources.

The plan applies to existing facilities at the following municipal waste combustor sites:

(a) Ogden Martin Systems, Marion County, Oregon.

(b) [Reserved]

[62 FR 36997, July 10, 1997; 62 FR 48950, Sept. 18, 1997]

CONTROL OF LANDFILL GAS EMISSIONS FROM EXISTING MUNICIPAL SOLID WASTE LANDFILLS

§ 62.9510 Identification of sources.

The plan applies to all existing MSW landfill facilities in Oregon meeting the requirements as stated in their State regulations.

[63 FR 34818, June 26, 1998]

METALS, ACID GASES, ORGANIC COMPOUNDS, PARTICULATES AND NITROGEN OXIDE EMISSIONS FROM EXISTING HOSPITAL/MEDICAL/INFECTIOUS WASTE INCINERATORS

§ 62.9515 Identification of sources—Negative declaration.

On October 20, 1998, and November 6, 1998, the Oregon Department of Environmental Quality submitted a letter

certifying that there are no existing Hospital/Medical/Infectious Waste Incinerators in the State subject to the Emission Guidelines under part 60, subpart B, of this chapter.

[65 FR 21363, Apr. 21, 2000]

Subpart NN—Pennsylvania

FLUORIDE EMISSIONS FROM PHOSPHATE FERTILIZER PLANTS

§ 62.9600 Identification of plan—negative declaration.

(a) The Pennsylvania Department of Environmental Resources submitted on December 1, 1977, a letter certifying that there are no existing phosphate fertilizer plants in the State subject to part 60, subpart B of this chapter.

(b) The Allegheny County Bureau of Air Pollution Control submitted a letter on August 18, 1978 certifying that there are no phosphate fertilizer plants in the County subject to part 60, subpart B of this chapter.

(c) The City of Philadelphia Air Management Services submitted on February 22, 1985, a letter certifying that there are no existing phosphate fertilizer plants in the City subject to part 60, subpart B of this chapter.

[47 FR 5900, Feb. 9, 1982, as amended at 50 FR 47734, Nov. 20, 1985]

SULFURIC ACID MIST EMISSIONS FROM EXISTING SULFURIC ACID PLANTS

§ 62.9601 Identification of plan.

(a) The Allegheny County Bureau of Air Pollution Control submitted a letter on August 18, 1978 certifying that there are no sulfuric acid plants in the County subject to part 60, subpart B of this chapter.

(b) A plan for the control of sulfuric acid mist emissions from existing sulfuric acid plants in the Commonwealth of Pennsylvania, submitted on May 30, 1978 and supplemented on August 17, 1981.

(c) The City of Philadelphia Air Management Services submitted on February 22, 1985, a letter certifying that there are no existing sulfuric acid plants in the City subject to part 60, subpart B of this chapter.

[47 FR 5900, Feb. 9, 1982, as amended at 50 FR 47735, Nov. 20, 1985]

TOTAL REDUCED SULFUR EMISSIONS FROM EXISTING KRAFT PULP MILLS

§ 62.9610 Identification of plan—negative declaration

(a) The Allegheny County Bureau of Air Pollution Control submitted a letter on February 14, 1985, certifying that there are no kraft pulp mills in the County subject to part 60, subpart B of this chapter.

(b) The City of Philadelphia Air Management Services submitted on February 22, 1985, a letter certifying that there are no existing kraft pulp mills in the City subject to part 60, subpart B of this chapter.

[50 FR 47735, Nov. 20, 1985]

§ 62.9611 Identification of plan—Pennsylvania.

(a) *Title of Plan.* Commonwealth of Pennsylvania Plan under section 111(d) for Designated Pollutants from Existing Facilities—Kraft Pulp Mills.

(b) The plan was officially submitted by the Pennsylvania Department of Environmental Resources on July 19, 1988, with revisions submitted on January 11, 1991, and August 15, 1991.

(c) *Identification of sources.* The Plan includes the following kraft pulp mills:

(1) Appleton Papers—Roaring Spring, Blair County

(2) P.H. Gladfelter—Spring Grove, York County

(3) Penntech Papers—Johnsonburg, Elk County

[64 FR 57784, Oct. 27, 1999]

FLUORIDE EMISSIONS FROM EXISTING PRIMARY ALUMINUM PLANTS

§ 62.9620 Identification of plan—negative declaration.

The Secretary, Department of Environmental Resources submitted on November 3, 1980, a letter certifying there are no primary aluminum plants in the Commonwealth of Pennsylvania subject to part 60, subpart B of this chapter.

[46 FR 41783, Aug. 18, 1981]

LANDFILL GAS EMISSIONS FROM EXISTING MUNICIPAL SOLID WASTE LANDFILLS (SECTION 111(d) PLAN)

§ 62.9630 Identification of plan.

Section 111(d) plan for municipal solid waste landfills and the associated Allegheny County Health Department Regulation in Article XXI, § 2105.73, as submitted on October 23, 1997, by the Commonwealth of Pennsylvania.

[64 FR 13077, Mar. 17, 1999]

§ 62.9631 Identification of sources.

The plan applies to all Allegheny County, Pennsylvania, existing municipal solid waste landfills for which construction, reconstruction, or modification was commenced before May 30, 1991 and that has accepted waste at any time since November 8, 1987 or that has additional capacity available for future waste deposition, as described in 40 CFR part 60, subpart Cc.

[64 FR 13077, Mar. 17, 1999]

§ 62.9632 Effective date.

The effective date of the plan for municipal solid waste landfills is April 16, 1999.

[64 FR 13078, Mar. 17, 1999]

§ 62.9633 Identification of plan—negative declaration.

Letter from the City of Philadelphia, Department of Public Health, submitted February 27, 1996, certifying that there are no existing municipal solid waste landfills in the City of Philadelphia that are subject to 40 CFR part 60, subpart Cc.

[68 FR 55, Jan. 2, 2003]

§ 62.9635 Identification of plan.

Section 111(d) plan for municipal solid waste landfills, as submitted on July 1, 1997, and as amended through April 9, 2003 by the Pennsylvania Department of Environmental Protection. The plan excludes the geographical areas of Allegheny County and the City of Philadelphia.

[68 FR 37425, June 24, 2003]

EFFECTIVE DATE NOTE: At 68 FR 37425, June 24, 2003, § 62.9635 was added, effective Aug. 25, 2003.

§ 62.9636 Identification of sources.

The plan applies to existing Pennsylvania landfills for which construction, reconstruction, or modification was commenced before May 30, 1991, that accepted waste at any time since November 8, 1987, or that have additional capacity available for future waste deposition, as described in 40 CFR part 60, subpart Cc.

[68 FR 37425, June 24, 2003]

EFFECTIVE DATE NOTE: At 68 FR 37425, § 62.9636 was added, effective Aug. 25, 2003.

§ 62.9637 Effective date.

The effective date of the plan for municipal solid waste landfills is August 25, 2003.

[68 FR 37425, June 24, 2003]

EFFECTIVE DATE NOTE: At 68 FR 37425, June 24, 2003, § 62.9637 was added, effective Aug. 25, 2003.

METALS, ACID GASES, ORGANIC COMPOUNDS AND NITROGEN OXIDE EMISSIONS FROM EXISTING MUNICIPAL WASTE COMBUSTORS WITH A UNIT CAPACITY GREATER THAN 250 TONS PER DAY

SOURCE: Sections 62.9640 through 62.9642 appear at 64 FR 45884, Aug. 23, 1999, unless otherwise noted.

§ 62.9640 Identification of plan.

The 111(d)/129 plan for municipal waste combustors (MWC) units with a capacity greater than 250 tons per day (TPD) and the associated Pennsylvania Department of Environmental Protection operating permits that were submitted to EPA on April 27, 1998, and as amended on September 8, 1998, and July 7, 2000, including supplemental information dated August 15, 2000. All affected facilities must achieve full compliance with all 111(d)/129 plan requirements on or before December 19, 2000.

[66 FR 43511, Aug. 20, 2001]

§ 62.9641 Identification of sources.

The plan applies to all existing MWC facilities with a MWC unit capacity greater than 250 TPD of municipal solid waste.

§ 62.9642 Effective dates.

(a) The effective date of the submitted 1998 111(d)/129 plan is October 22, 1999.

(b) The effective date of the submitted 2000 111(d)/129 plan revision is October 4, 2001.

[66 FR 43511, Aug. 20, 2001]

EMISSIONS FROM EXISTING MUNICIPAL WASTE COMBUSTORS WITH THE CAPACITY TO BURN GREATER THAN 250 TONS PER DAY OF MUNICIPAL SOLID WASTE

SOURCE: Sections 62.9643 and 62.9644 appear at 65 FR 33467, May 24, 2000, unless otherwise noted.

§ 62.9643 Identification of plan—negative declaration.

Letter from the Allegheny County Health Department submitted March 14, 1996 certifying that there are no existing municipal waste combustor units in Allegheny County that are subject to part 60, subpart Cb, of this chapter.

§ 62.9644 Identification of plan—negative declaration.

Letter from the City of Philadelphia Department of Public Health submitted February 14, 1997 certifying that there are no existing municipal waste combustor units in the City of Philadelphia that are subject to part 60, subpart Cb, of this chapter.

EMISSIONS FROM EXISTING SMALL MUNICIPAL WASTE COMBUSTION UNITS

SOURCE: 68 FR 51, Jan. 2, 2003, unless otherwise noted.

§ 62.9645 Identification of plan—negative declaration.

Letter from the Allegheny County Health Department submitted November 21, 2001, certifying that there are no existing small municipal waste combustion units within Allegheny County, Pennsylvania that are subject to 40 CFR part 60, subpart BBBB.

§ 62.9646 Identification of plan—negative declaration.

Letter from the City of Philadelphia, Department of Public Health, submitted February 9, 2001, certifying that there are no existing small municipal waste combustion units within the City of Philadelphia, Pennsylvania that are subject to 40 CFR part 60, subpart BBBB.

EMISSIONS FROM EXISTING HOSPITAL/MEDICAL/INFECTIOUS WASTE INCINERATORS (HMIWIS)—SECTION 111(D)/129 PLANS

SOURCE: Sections 62.9650 through 62.9652 appear at 67 FR 22359, May 3, 2002, unless otherwise noted.

§ 62. 9650 Identification of plan.

Section 111(d)/129 plan for designated HMIWIs and the associated state issued air quality construction and operating permits, as submitted on October 26, 1998, amended December 3, 1999, May 4, August 9, and October 22, 2001.

§ 62.9651 Identification of sources.

The plan applies to all existing HMIWIs located in Pennsylvania, excluding Allegheny County, for which construction was commenced on or before June 20, 1996.

§ 62.9652 Effective date.

The effective date of the plan is June 17, 2002.

EMISSIONS FROM EXISTING HOSPITAL/MEDICAL/INFECTIOUS WASTE INCINERATORS (HMIWIS)—SECTION 111(d)/129 PLAN

SOURCE: Sections 62.9660 through 62.9662 appear at 65 FR 18252, Apr. 7, 2000, unless otherwise noted.

§ 62.9660 Identification of plan.

Section 111(d)/129 plan for HMIWIs and the associated Allegheny County Health Department (ACHD) regulations, as submitted on June 24, 1999.

§ 62.9661 Identification of sources.

The plan applies to all Allegheny County, Pennsylvania existing HMIWI for which construction was commenced on or before June 20, 1996.

§ 62.9662 Effective date.

The effective date of the plan is June 6, 2000.

[65 FR 18252, Apr. 7, 2000; 65 FR 34104, May 26, 2000]

EMISSIONS FROM EXISTING COMMERCIAL/INDUSTRIAL SOLID WASTE INCINERATION UNITS

§ 62.9670 Identification of plan—negative declaration.

Letter from the City of Philadelphia, Department of Public Health, submitted February 9, 2001, certifying that there are no existing commercial/industrial solid waste incineration units within the City of Philadelphia, Pennsylvania that are subject to 40 CFR part 60, subpart DDDD.

[68 FR 49, Jan. 2, 2003]

Subpart OO—Rhode Island

§ 62.9825 Identification of plan.

(a) *Identification of Plan.* Rhode Island Plan for the Control of Designated Pollutants from Existing Plants (Section 111(d) Plan).

(b) The plan was officially submitted as follows:

(1) Control of air emissions from existing hospital/medical/infectious waste incinerators, submitted on August 2, 2000.

(2) [Reserved]

(c) *Designated facilities.* The plan applies to existing facilities in the following categories of sources:

(1) Hospital/medical/infectious waste incinerators.

(2) [Reserved]

[66 FR 21096, Apr. 27, 2001]

FLUORIDE EMISSIONS FROM PHOSPHATE FERTILIZER PLANTS

§ 62.9850 Identification of plan—negative declaration.

The State Department of Environmental Management submitted on November 14, 1977, a letter certifying that there are no existing phosphate fertilizer plants in the state subject to part 60, subpart B of this chapter.

[44 FR 54052, Sept. 18, 1979]

SULFURIC ACID MIST EMISSIONS FROM SULFURIC ACID PRODUCTION UNITS

§ 62.9875 Identification of plan—negative declaration.

The State Department of Environmental Management submitted on November 14, 1977, a letter certifying that there are no existing sulfuric acid plants in the state subject to part 60, subpart B of this chapter.

[44 FR 54052, Sept. 18, 1979]

TOTAL REDUCED SULFUR EMISSIONS FROM EXISTING KRAFT PULP MILLS

§ 62.9900 Identification of plan—negative declaration.

The State Department of Environmental Management submitted on July 26, 1979, a letter certifying that there are no existing kraft pulp mills in the State subject to part 60, subpart B of this chapter.

[54 FR 9047, Mar. 3, 1989]

FLUORIDE EMISSIONS FROM EXISTING PRIMARY ALUMINUM PLANTS

§ 62.9950 Identification of plan—negative declaration.

The State Department of Environmental Management submitted on December 8, 1989, a letter certifying that there are no existing primary aluminum reduction plants in the State subject to part 60, subpart B of this chapter.

[54 FR 9047, Mar. 3, 1989]

AIR EMISSIONS FROM EXISTING COMMERCIAL AND INDUSTRIAL SOLID WASTE INCINERATION UNITS

§ 62.9970 Identification of plan—negative declaration.

On January 8, 2002, the Rhode Island Department of Environmental Management submitted a letter certifying that there are no existing commercial and industrial solid waste incineration units in the state subject to the emission guidelines under part 60, subpart DDDD of this chapter.

[67 FR 17946, Apr. 12, 2002]

MUNICIPAL WASTE COMBUSTOR EMISSIONS FROM EXISTING MUNICIPAL WASTE COMBUSTORS WITH THE CAPACITY TO COMBUST GREATER THAN 250 TONS PER DAY OF MUNICIPAL SOLID WASTE

§62.9975 Identification of plan—negative declaration.

On February 5, 1992, the Rhode Island Department of Environmental Management submitted a letter certifying that there are no existing municipal waste combustors in the State subject to the emission guidelines published on February 11, 1991 (56 FR 5514) pursuant to part 60, subpart B of this chapter.

[57 FR 44692, Sept. 29, 1992]

AIR EMISSIONS FROM EXISTING MUNICIPAL WASTE COMBUSTORS WITH THE CAPACITY TO COMBUST AT LEAST 35 TONS PER DAY BUT NO MORE THAN 250 TONS PER DAY OF MUNICIPAL SOLID WASTE

§62.9980 Identification of plan—negative declaration.

On January 8, 2002, the Rhode Island Department of Environmental Management submitted a letter certifying that there are no existing small municipal waste combustors in the state subject to the emission guidelines under part 60, subpart BBBB of this chapter.

[67 FR 17946, Apr. 12, 2002]

EMISSIONS FROM EXISTING MUNICIPAL SOLID WASTE LANDFILLS

§62.9985 Identification of plan-negative declaration.

On May 27, 1998, the Rhode Island Department of Environmental Management submitted a letter certifying that there are no existing municipal solid waste landfills in the state subject to the emission guidelines under part 60, subpart B of this chapter.

[68 FR 10664, Mar. 6, 2003]

AIR EMISSIONS FROM EXISTING HOSPITAL/MEDICAL/INFECTIOURS WASTE INCINERATORS

§62.9990 Identification of sources.

(a) The plan applies to the following existing hospital/medical/infectious waste incinerators that were still operating as of the date of publication, and to any other unit for which construction commenced on or before June 20, 1996:

(1) Eleanor Slater Hospital/Zambarano Unit, Pascoag.

(2) Our Lady of Fatima Hospital, North Providence.

(3) Rhode Island Hospital, Providence.

(4) Roger Williams Hospital, Providence.

(b) [Reserved]

[66 FR 21096, Apr. 27, 2001]

Subpart PP—South Carolina

PLAN FOR THE CONTROL OF DESIGNATED POLLUTANTS FROM EXISTING FACILITIES (SECTION 111(d) PLAN)

SOURCE: 47 FR 29236, July 6, 1982, unless otherwise noted.

§62.10100 Identification of plan.

(a) *Identification of plan.* South Carolina Designated Facility Plan (Section 111(d) Plan).

(b) The plan was officially submitted as follows:

(1) Implementation Plan for Control of Designated Pollutants, including sulfuric acid mist from sulfuric acid plants and total reduced sulfur from kraft pulp mills, submitted on December 22, 1981.

(2) A revision to South Carolina's 111(d) plan for total reduced sulfur which was submitted on December 13, 1984. This revision approved an alternate emission limit for the digesters and an extended compliance schedule for the evaporators at Stone Container Corporation.

(3) South Carolina Implementation Plan for Existing Large Municipal Waste Combustors, submitted on January 14, 1998, by the South Carolina Department of Health and Environmental Control.

(4) South Carolina Implementation Plan for Existing Municipal Solid Waste Landfills, submitted on April 12, 1999, by the South Carolina Department of Health and Environmental Control.

(5) South Carolina Designated Facility Plan (Section 111(d)/129) for Hospital/Medical/Infectious Waste Incinerators, submitted on September 19, 2000, by the South Carolina Department of Health and Environmental Control.

(c) *Designated facilities.* The plan applies to existing facilities in the following categories sources:

(1) Sulfuric acid plants.

(2) Kraft pulp mills.

(3) Existing municipal waste combustors.

(4) Existing municipal solid waste landfills.

(5) Existing hospital/medical/infectious waste incinerators.

[47 FR 29236, July 6, 1982, as amended at 50 FR 33037, Aug. 16, 1985; 63 FR 40048, July 27, 1998; 64 FR 46151, Aug. 24, 1999; 66 FR 48567, Sept. 21, 2001]

SULFURIC ACID MIST FROM SULFURIC ACID PLANTS

§ 62.10110 Identification of sources.

The plan applies to existing plants at the following locations:

(1) Sulfur-burning plants of W. R. Grace and Company's plant in Charleston.

(2) There are no bound sulfur or oleum plants.

TOTAL REDUCED SULFUR EMISSIONS FROM KRAFT PULP MILLS

§ 62.10120 Identification of sources.

The plan applies to existing facilities at the following kraft pulp mills:

(1) Westvaco in North Charleston.

(2) International Paper Company in Georgetown.

(3) Bowater Carolina Company in Catawba.

(4) Stone Container Corporation in Florence.

[47 FR 29236, July 6, 1982, as amended at 50 FR 33037, Aug. 16, 1985]

FLUORIDE EMISSIONS FROM PHOSPHATE FERTILIZER PLANTS

§ 62.10130 Identification of plan—negative declaration.

The South Carolina Department of Health and Environmental Control submitted on November 2, 1977, a letter certifying that there are no existing phosphate fertilizer plants in the State subject to part 60, subpart B, of this chapter.

FLUORIDE EMISSIONS FROM EXISTING PRIMARY ALUMINUM REDUCTION PLANTS

§ 62.10140 Identification of plan—negative declaration.

The South Carolina Department of Health and Environmental Control submitted on May 3, 1983, a letter certifying that there are no existing primary aluminum plants in the State which are subject to part 60 subpart B of this chapter.

[50 FR 33037, Aug. 16, 1985]

METALS, ACID GASES, ORGANIC COMPOUNDS AND NITROGEN OXIDE EMISSIONS FROM EXISTING MUNICIPAL WASTE COMBUSTORS WITH THE CAPACITY TO COMBUST GREATER THAN 250 TONS PER DAY OF MUNICIPAL SOLID WASTE.

§ 62.10150 Identification of sources.

The plan applies to existing facilities with a municipal waste combustor (MWC) unit capacity greater than 250 tons per day of municipal solid waste (MSW) at the following MWC sites:

(a) Foster Wheeler Charleston Resource Recovery Facility, Charleston, South Carolina.

(b) [Reserved]

[63 FR 40049, July 27, 1998]

LANDFILL GAS EMISSIONS FROM EXISTING MUNICIPAL SOLID WASTE LANDFILLS

§ 62.10160 Identification of sources.

The plan applies to existing municipal solid waste landfills for which construction, reconstruction, or modification was commenced before May 30, 1991, that accepted waste at any time since November 8, 1987, or that have additional capacity available for future waste deposition, as described in 40 CFR part 60, subpart Cc.

[64 FR 46151, Aug. 24, 1999]

AIR EMISSIONS FROM HOSPITAL/MEDICAL/INFECTIOUS WASTE INCINERATORS

§62.10170 Identification of sources.

The plan applies to existing hospital/medical/infectious waste incinerators for which construction, reconstruction, or modification was commenced before June 20, 1996, as described in 40 CFR part 60, subpart Ce.

[66 FR 48567, Sept. 21, 2001]

AIR EMISSIONS FROM SMALL EXISTING MUNICIPAL WASTE COMBUSTION UNITS

§62.10180 Identification of plan—negative declaration.

Letter from the South Carolina Department of Health and Environmental Control submitted November 6, 2001, certifying that there are no small municipal waste combustion units subject to 40 CFR part 60, subpart BBBB.

[67 FR 273, Jan. 3, 2002]

Subpart QQ—South Dakota

SOURCE: 64 FR 29799, June 3, 1999, unless otherwise noted.

LANDFILL GAS EMISSIONS FROM EXISTING MUNICIPAL SOLID WASTE LANDFILLS

§62.10350 Identification of plan.

''Section 111(d) State Plan for Municipal Solid Waste Landfills'' and the State's implementing regulations in Sections 74:36:07:34 through 74:36:07:42 of the Administrative Rules of South Dakota (ARSD), submitted by the State on May 2, 1997 with amendments to the plan submitted on May 6, 1999.

§62.10351 Identification of sources.

The plan applies to all existing municipal solid waste landfills for which construction, reconstruction, or modification was commenced before May 30, 1991 that accepted waste at any time since November 8, 1987 or that have additional capacity available for future waste deposition, as described in 40 CFR part 60, subpart Cc.

§62.10352 Effective date.

The effective date of the plan for municipal solid waste landfills is August 2, 1999.

AIR EMISSIONS FROM HOSPITAL/MEDICAL/INFECTIOUS WASTE INCINERATORS

SOURCE: Sections 62.10360 through 62.10362 appear at 65 FR 38740, June 22, 2000, unless otherwise noted.

§62.10360 Identification of plan.

Section 111(d) Plan for Hospital/Medical/Infectious Waste Incinerators and the associated State regulation, chapter 74:36:07 section 74:36:07:06.01 of the Administrative Rules of South Dakota, submitted by the State on February 7, 2000.

§62.10361 Identification of sources.

The plan applies to all existing hospital/medical/infectious waste incinerators for which construction was commenced on or before June 20, 1996, as described in 40 CFR part 60, Subpart Ce.

§62.10362 Effective date.

The effective date for the portion of the plan applicable to existing hospital/medical/infectious waste incinerators is August 21, 2000.

EMISSIONS FROM EXISTING MUNICIPAL WASTE COMBUSTORS WITH THE CAPACITY TO BURN GREATER THAN 250 TONS PER DAY OF MUNICIPAL SOLID WASTE

§62.10370 Identification of plan—negative declaration.

Letter from the Department of Environment and Natural Resources submitted June 20, 1997 certifying that there are no existing municipal waste combustor units in the State of South Dakota that are subject to part 60, subpart Cb, of this chapter.

[65 FR 33467, May 24, 2000]

Subpart RR—Tennessee

FLUORIDE EMISSIONS FROM PHOSPHATE FERTILIZER PLANTS

§ 62.10602 Identification of sources—negative declaration.

The Tennessee Department of Health and Environment on April 4, 1985, submitted a letter certifying that there are no existing phosphate fertilizer plants in the State subject to part 60, subpart B of this chapter.

[50 FR 26204, June 25, 1985]

TOTAL REDUCED SULFUR EMISSIONS FROM EXISTING KRAFT PULP MILLS

§ 62.10625 Identification of plan.

On June 25, 1993, the State submitted revisions to the Tennessee State Implementation Plan (SIP). These were revisions to the process gaseous emission standards. These revisions incorporate changes to Rule 1200–3–7–.07, subparagraphs (4)(a) and (4)(b) of the Tennessee SIP which bring this into conformance with the requirements of 40 CFR part 62, subpart I.

[61 FR 29667, June 12, 1996]

PLAN FOR THE CONTROL OF DESIGNATED POLLUTANTS FROM EXISTING FACILITIES (SECTION 111(d) PLAN)

§ 62.10626 Identification of plan.

(a) Identification of plan. Tennessee Designated Facility Plan (Section 111(d) plan).

(b) The plan was officially submitted as follows:

(1) Metropolitan Nashville and Davidson County Tennessee's Implementation Plan For Municipal Waste Combustors, submitted on December 24, 1996, by the State of Tennessee Department of Environment and Conservation.

(2) Metropolitan Nashville and Davidson County Tennessee's Plan For Implementing the Municipal Solid Waste Landfill Emission Guidelines, submitted on December 24, 1996, by the State of Tennessee Department of Environment and Conservation.

(3) State of Tennessee Plan for Implementing the Municipal Solid Waste Landfill Emission Guideline Requirements of 40 CFR part 60, subpart Cc, submitted on January 8, 1999, by the Tennessee Department of Environment and Conservation.

(4) Knox County Department of Air Quality Management Implementation Plan: Federal Emission Guidelines Municipal Solid Waste Landfills, submitted on July 29, 1999, by the State of Tennessee Department of Environment and Conservation.

(5) Chattanooga-Hamilton County Air Pollution Control Bureau Clean Air Act Section 111(d) Plan for Municipal Solid Waste Landfills, submitted on April 26, 1999, by the State of Tennessee Department of Environment and Conservation.

(c) *Designated facilities.* The plan applies to existing facilities in the following categories of sources:

(1) Existing municipal waste combustors.

(2) Existing municipal solid waste landfills.

[63 FR 70026, Dec. 18, 1998, as amended at 64 FR 52663, Sept. 30, 1999; 65 FR 8857, 8859, Feb. 23, 2000]

METALS, ACID GASES, ORGANIC COMPOUNDS AND NITROGEN OXIDE EMISSIONS FROM EXISTING MUNICIPAL WASTE COMBUSTORS WITH THE CAPACITY TO COMBUST GREATER THAN 250 TONS PER DAY OF MUNICIPAL SOLID WASTE

§ 62.10627 Identification of sources.

The plan applies to existing facilities with a municipal waste combustor (MWC) unit capacity greater than 250 tons per day of municipal solid waste (MSW) at the following MWC sites:

(a) Nashville Thermal Transfer Corporation, Nashville, Tennessee.

[63 FR 70026, Dec. 18, 1998]

LANDFILL GAS EMISSIONS FROM EXISTING MUNICIPAL SOLID WASTE LANDFILLS

§ 62.10628 Identification of sources.

The plan applies to existing municipal solid waste landfills for which construction, reconstruction, or modification was commenced before May 30, 1991, that accepted waste at any time since November 8, 1987, or that have additional capacity available for future

waste deposition, as described in 40 CFR part 60, subpart Cc.

[63 FR 70027, Dec. 18, 1998]

Subpart SS—Texas

SOURCE: 61 FR 55576, Oct. 28, 1996, unless otherwise noted.

PLAN FOR THE CONTROL OF DESIGNATED POLLUTANTS FROM EXISTING FACILITIES (SECTION 111(d) PLAN)

§ 62.10850 Identification of Plan.

(a) *Identification of plan.* Texas Plan for Control of Designated Pollutants from Existing Facilities (111(d)Plan).

(b) The plan was officially submitted as follows:

(1) Control of sulfuric acid mist from existing sulfuric acid production plants as adopted by the Texas Air Control Board (TACB) on May 12, 1989, and submitted by the Governor in a letter dated August 21, 1989.

(2) Control of total reduced sulfur from existing kraft pulp mills as adopted by the Texas Air Control Board (TACB) on May 12, 1989, and submitted by the Governor in a letter dated August 21, 1989.

(3) Control of landfill gas emissions from existing municipal solid waste landfills, submitted by the Governor on November 3, 1998.

(4) Control of air emissions from designated hospital/medical/infectious waste incinerators submitted by the Governor in a letter dated June 2, 2000.

(c) *Designated facilities.* The plan applies to existing facilities in the following categories of sources:

(1) Sulfuric acid production plants.

(2) Kraft Pulp Mills.

(3) Municipal solid waste landfills

(4) Hospital/medical/infectious waste incinerators.

[61 FR 55576, Oct. 28, 1996, as amended at 64 FR 32430, June 17, 1999; 66 FR 49836, Oct. 1, 2001]

SULFURIC ACID MIST FROM EXISTING SULFURIC ACID PLANTS

§ 62.10860 Identification of sources.

(a) *Identification of sources.* The plan includes the following sulfuric acid production plants:

(1) Diamond-Shamrock Corporation in Sunray, Texas.

(2) Amoco Oil Company in Texas City, Texas.

(3) E.I. duPont de Nemours & Company, Inc. in La Porte, Texas.

(4) Mobil Mining and Minerals in Pasadena, Texas.

(5) Rohm and Haas, Texas Inc. in Deer Park, Texas.

(6) Stauffer Chemical Company in Baytown, Texas.

(7) Stauffer Chemical Company in Houston, Texas.

(8) Olin Corporation in Beaumont, Texas.

(9) Stauffer Chemical Company in Pasadena, Texas.

(10) Stauffer Chemical Company in Fort Worth, Texas.

TOTAL REDUCED SULFUR FROM EXISTING KRAFT PULP MILLS

§ 62.10870 Identification of source.

(a) Identification of sources. The plan includes the following kraft pulp mills:

(1) Simpson Paper Company in Pasadena, Texas.

(2) Champion International in Sheldon, Texas.

(3) Temple-Eastex, Inc. in Evadale, Texas.

(4) Champion International in Lufkin, Texas.

(5) International Paper Company in Domino, Texas.

(6) Inland-Orange, Inc. in Orange, Texas.

LANDFILL GAS EMISSIONS FROM EXISTING MUNICIPAL SOLID WASTE LANDFILLS

§ 62.10880 Identification of sources.

The plan applies to existing municipal solid waste landfills for which construction, reconstruction, or modification was commenced before May 30, 1991, that accepted waste at any time since October 8, 1993, or that have additional capacity available for future waste deposition, as described in 40 CFR part 60, subpart Cc.

[64 FR 32430, June 17, 1999]

EMISSIONS FROM EXISTING MUNICIPAL WASTE COMBUSTORS WITH THE CAPACITY TO BURN GREATER THAN 250 TONS PER DAY OF MUNICIPAL SOLID WASTE

§ 62.10890 Identification of plan—negative declaration.

Letter from the Texas Natural Resource Conservation Commission submitted May 13, 1997 certifying that there are no existing municipal waste combustor units in the State of Texas that are subject to part 60, subpart Cb, of this chapter.

[65 FR 33467, May 24, 2000]

AIR EMISSIONS FROM HOSPITAL/MEDICAL/INFECTIOUS WASTES INCINERATORS

§ 62.10910 Identification of sources.

The plan applies to existing hospital/medical/infectious waste incinerators for which construction, reconstruction, or modification was commenced before June 20, 1996, as described in 40 CFR part 60, subpart Ce.

[66 FR 49836, Oct. 1, 2001]

§ 62.10911 Effective date.

The effective date for the portion of the plan applicable to existing hospital/medical/infectious waste incinerators is November 30, 2001.

[66 FR 49836, Oct. 1, 2001]

Subpart TT—Utah

FLUORIDE EMISSIONS FROM EXISTING PHOSPHATE FERTILIZER PLANTS

§ 62.11100 Identification of plan—negative declaration.

The Utah Department of Environmental Quality certified in a letter dated January 30, 2002 that there are no phosphate fertilizer plants in Utah that meet the definition of affected facility under 40 CFR part 60, subpart T, U, V, W or X, Standards of Performance for the Phosphate Fertilizer Industry. Additionally, there are no phosphate fertilizer plants in Utah that meet the definition of affected facility under 40 CFR part 62, subpart T, U, V, W or X, constructed before October 22, 1974, and that have not reconstructed or modified since 1974.

(Note: the State referenced part 62 in the second sentence. We believe they meant part 60).

[67 FR 35444, May 20, 2002]

LANDFILL GAS EMISSIONS FROM EXISTING MUNICIPAL SOLID WASTE LANDFILLS

§ 62.11110 Identification of plan.

''Utah State Plan for Implementation of Emission Controls for Existing Designated Facilities, Section I. Municipal Solid Waste Landfills'' and the associated State regulations in R307–20–2 and R307–21 of the Utah Air Conservation Regulations, submitted by the State on April 2, 1997 with amendments to the plan submitted on October 31, 1997.

[63 FR 2156, Jan. 14, 1998]

§ 62.11111 Identification of sources.

The plan applies to all existing municipal solid waste landfills for which construction, reconstruction, or modification was commenced before May 30, 1991 that accepted waste at any time since November 8, 1987 or that have additional capacity available for future waste deposition, as described in 40 CFR part 60, subpart Cc.

[63 FR 2156, Jan. 14, 1998]

§ 62.11112 Effective date.

The effective date of the plan for municipal solid waste landfills is March 16, 1998.

[63 FR 2156, Jan. 14, 1998]

AIR EMISSIONS FROM HOSPITAL/MEDICAL/INFECTIOUS WASTE INCINERATORS

SOURCE: Sections 62.11120 through 62.11122 appear at 65 FR 38740, June 22, 2000, unless otherwise noted.

§ 62.11120 Identification of plan.

Section 111(d) Plan for Hospital/Medical/Infectious Waste Incinerators and the associated State regulation R307–220–3 and R307–222 of the Utah Air Conservation Regulations, submitted by the State on March 2, 1999 and October 25, 1999.

§62.11121 Identification of sources.

The plan applies to all existing hospital/medical/infectious waste incinerators for which construction was commenced on or before June 20, 1996, as described in 40 CFR part 60, subpart Ce.

§62.11122 Effective date.

The effective date for the portion of the plan applicable to existing hospital/medical/infectious waste incinerators is August 21, 2000.

EMISSIONS FROM EXISTING MUNICIPAL WASTE COMBUSTORS WITH THE CAPACITY TO BURN GREATER THAN 250 TONS PER DAY OF MUNICIPAL SOLID WASTE

§62.11130 Identification of plan—negative declaration.

Letter from the Department of Environmental Quality submitted June 16, 1997 certifying that there are no existing municipal waste combustor units in the State of Utah that are subject to part 60, subpart Cb, of this chapter.

[65 FR 33467, May 24, 2000]

Subpart UU—Vermont

FLUORIDE EMISSIONS FROM PHOSPHATE FERTILIZER PLANTS

§62.11350 Identification of plan—negative declaration.

The State Agency of Environmental Conservation submitted on April 11, 1978, a letter certifying that there are no existing phosphate fertilizer plants in the state subject to part 60, subpart B of this chapter.

[44 FR 54052, Sept. 18, 1979]

SULFURIC ACID MIST EMISSIONS FROM SULFURIC ACID PRODUCTION UNITS

§62.11375 Identification of plan—negative declaration.

The State Agency of Environmental Conservation submitted on April 11, 1978, a letter certifying that there are no existing sulfuric acid plants in the state subject to part 60, subpart B of this chapter.

[44 FR 54053, Sept. 18, 1979]

TOTAL REDUCED SULFUR EMISSIONS FROM EXISTING KRAFT PULP MILLS

§62.11400 Identification of plan—negative declaration.

The State Agency of Environmental Conservation submitted on August 2, 1979, a letter certifying that there are no existing kraft pulp mills in the State subject to part 60, subject B of this chapter.

[54 FR 9047, Mar. 3, 1989]

FLUORIDE EMISSIONS FROM EXISTING PRIMARY ALUMINUM PLANTS

§62.11425 Identification of plan—negative declaration.

The State Agency of Environmental Conservation submitted on January 4, 1989, a letter certifying that there are no existing primary aluminum reduction plants in the State subject to part 60, subpart B of this chapter.

[54 FR 9047, Mar. 3, 1989]

MUNICIPAL WASTE COMBUSTOR EMISSIONS FROM EXISTING MUNICIPAL WASTE COMBUSTORS WITH THE CAPACITY TO COMBUST GREATER THAN 250 TONS PER DAY OF MUNICIPAL SOLID WASTE

§62.11450 Identification of plan—negative declaration.

On September 18, 1992, the Vermont Agency of Natural Resources submitted a letter certifying that there are no existing municipal waste combustors in the State subject to the emission guidelines published on February 11, 1991 (56 FR 5514) pursuant to part 60, subpart B of this chapter.

[57 FR 44692, Sept. 29, 1992]

MUNICIPAL WASTE COMBUSTOR EMISSIONS FROM EXISTING SMALL MUNICIPAL WASTE COMBUSTORS WITH THE CAPACITY TO COMBUST BETWEEN 35 AND 250 TONS PER DAY OF MUNICIPAL SOLID WASTE

§62.11460 Identification of Plan-negative declaration.

On June 5, 2001, the Vermont Agency of Natural Resources submitted a letter certifying that there are no existing small municipal waste combustors in the state subject to the emission

guidelines under part 60, subpart B of this chapter.

[66 FR 52537, Oct. 16, 2001]

AIR EMISSIONS FROM EXISTING HOSPITAL/MEDICAL/INFECTIOUS WASTE INCINERATORS

§ 62.11475 Identification of Plan—negative declaration.

On April 16, 1999, the Vermont Agency of Natural Resources submitted a letter certifying that there are no existing hospital/medical/infectious waste incinerators in the state subject to the emission guidelines under Part 60, Subpart B of this chapter.

[64 FR 62119, Nov. 16, 1999]

AIR EMISSIONS FROM EXISTING COMMERCIAL AND INDUSTRIAL SOLID WASTE INCINERATION UNITS

§ 62.11480 Identification of Plan-negative declaration.

On June 5, 2001, the Vermont Agency of Natural Resources submitted a letter certifying that there are no existing commercial and industrial solid waste incineration units in the state subject to the emission guidelines under part 60, subpart DDDD of this chapter.

[66 FR 63940, Dec. 11, 2001]

EMISSION FROM EXISTING MUNICIPAL SOLID WASTE LANDFILLS

§ 62.11485 Identification of Plan—negative declaration.

On August 20, 1996, the Vermont Department of Environmental Conservation submitted a letter certifying that there are no existing municipal solid waste landfills in the state subject to the emission guidelines under part 60, subpart B of this chapter.

[68 FR 27913, May 22, 2003]

EFFECTIVE DATE NOTE: At 68 FR 27913, May 22, 2003, Subpart UU was amended by adding a new § 62.11485 and a new undesignated center heading, effective July 21, 2003.

Subpart VV—Virginia

FLUORIDE EMISSIONS FROM PHOSPHATE FERTILIZER PLANTS

§ 62.11600 Identification of plan—negative declaration.

The Secretary of Commerce and Resources, Office of the Governor submitted on May 13, 1977, a letter certifying that there are no existing phosphate fertilizer plants in the State subject to part 60, subpart B of this chapter.

[45 FR 43412, June 27, 1980]

SULFURIC ACID MIST EMISSIONS FROM EXISTING SULFURIC ACID PLANTS

§ 62.11601 Identification of plan.

(a) *Title of plan.* Commonwealth of Virginia State Implementation Plan under section 111(d) of the Clean Air Act for the Designated Facility—Sulfuric Acid Plants.

(b) The plan was officially submitted by the Secretary of Commerce and Resources, Commonwealth of Virginia, on September 29, 1978.

(c) [Reserved]

(d) *Identification of sources.* The plan includes the following sulfuric acid plants:

Allied Chemical, Hopewell
Allied Chemical, Front Royal
Du Pont, James River
Smith Douglas, Chesapeake
U.S. Army Ammo Plant, Radford
Weaver Fertilizer, Norfolk

(e) A variance issued to the E. I. du Pont de Nemours and Company James River Sulfuric Acid Plant located in Chesterfield County, Virginia exempting the plant from section 4.51(c)(2) until December 15, 1981, submitted on October 21, 1980 by the Virginia Secretary of Commerce and Resources.

(f) [Reserved]

(g) Section 4.51(c)(2) is replaced with Rule 4–21 (Emission Standards from Sulfuric Acid Production Units), section 120–04–2104 (Standard for Sulfuric Acid Mist), effective February 1, 1985.

This revision was submitted on February 14, 1985 by the Commonwealth of Virginia.

[46 FR 55973, Nov. 13, 1981, as amended at 46 FR 55975, Nov. 13, 1981; 60 FR 50105, Sept. 28, 1995]

TOTAL REDUCED SULFUR EMISSIONS FROM EXISTING KRAFT PULP MILLS

§62.11610 Identification of plan.

(a) *Title of Plan.* Commonwealth of Virginia State Implementation Plan under section 111(d) plan for the Designated Facility—Kraft Pulp Mills.

(b) The plan was officially submitted by the Executive Director of the Department of Virginia Department of Air Pollution Control, on May 15, 1990.

(c) Identification of sources. The Plan includes the following Kraft Pulp Mills:

(1) Chesapeake Corporation, West Point;

(2) Stone Container Corporation, Hopewell;

(3) Union Camp Corporation, Franklin; and

(4) Westvaco Corporation, Covington.

[63 FR 47437, Sept. 8, 1998; 63 FR 54058, Oct. 8, 1998]

§§62.11611—62.11619 [Reserved—plan not submitted]

FLUORIDE EMISSIONS FROM EXISTING PRIMARY ALUMINUM PLANTS

§62.11620 Identification of plan—negative declaration.

The Commonwealth of Virginia, Office of the Governor, submitted on July 9, 1980, a letter certifying that there are no designated facilities in the Commonwealth subject to the emission guidelines set forth in the Final Guideline Document for the Control of Fluoride Emissions from Existing Primary Aluminum Plants.

[46 FR 41783, Aug. 18, 1981]

Subpart WW—Washington

FLUORIDE EMISSIONS FROM PHOSPHATE FERTILIZER PLANTS

§62.11850 Identification of plan—negative declaration.

The Washington State Department of Ecology submitted on August 29, 1979, certification that there are no existing phosphate fertilizer plants in the State subject to part 60, subpart B of this chapter.

[44 FR 76281, Dec. 26, 1979]

PLANS FOR THE CONTROL OF DESIGNATED POLLUTANTS FROM EXISTING FACILITIES (SECTION 111(d) PLAN)

§62.11860 Identification of Plan.

(a) *Identification of Plan.* Washington State Designated Facility Plan (Section 111(d) Plan).

(b) The plan was officially submitted as follows:

(1) Control of metals, acid gases, organic compounds and nitrogen oxide emissions from existing municipal waste combustors was submitted by State of Washington Department of Ecology on January 4, 1999.

(2) [Reserved]

(c) *Designated Facilities.* The plan applies to existing facilities in the following category of sources:

(1) Existing municipal waste combustors.

(2) [Reserved]

[64 FR 41294, July 30, 1999]

METALS, ACID GASES, ORGANIC COMPOUNDS AND NITROGEN OXIDE EMISSIONS FROM EXISTING MUNICIPAL WASTE COMBUSTORS WITH THE CAPACITY TO COMBUST GREATER THAN 250 TONS PER DAY OF MUNICIPAL SOLID WASTE

§62.11870 Identification of sources.

The plan applies to existing facilities at the following municipal waste combustor sites:

(1) Spokane Regional Solid Waste System, Spokane, WA.

(2) [RESERVED]

[64 FR 41294, July 30, 1999]

Subpart XX—West Virginia

FLUORIDE EMISSIONS FROM PHOSPHATE FERTILIZER PLANTS

§ 62.12100 Identification of plan—negative declaration.

The West Virginia Air Pollution Control Commission submitted on October 25, 1977, a letter certifying that there are no existing phosphate fertilizer plants in the State subject to part 60, subpart B of this chapter.

[45 FR 43412, June 27, 1980]

EMISSIONS FROM EXISTING MUNICIPAL WASTE COMBUSTORS WITH THE CAPACITY TO BURN GREATER THAN 250 TONS PER DAY OF MUNICIPAL SOLID WASTE

§ 62.12110 Identification of plan—negative declaration.

Letter from the Division of Environmental Protection submitted March 11, 1996 certifying that there are no existing municipal waste combustor units in the State of West Virginia that are subject to part 60, subpart Cb, of this chapter.

[65 FR 33467, May 24, 2000]

LANDFILL GAS EMISSIONS FROM EXISTING MUNICIPAL SOLID WASTE LANDFILLS (SECTION 111(d)) PLAN

SOURCE: Sections 62.12125 through 62.12127 appear at 66 FR 28379, May 23, 2001, unless otherwise noted.

§ 62.12125 Identification of plan.

West Virginia 111(d) plan for municipal solid waste landfills, including delegation of Federal plan (64 FR 60689) compliance schedule and reporting requirements, as submitted to the Environmental Protection Agency on May 29, 1998, and as amended on May 15, 2000, and December 20, 2000.

§ 62.12126 Identification of sources.

The plan applies to all existing West Virginia municipal solid waste landfills for which construction, reconstruction, or modification was commenced before May 30, 1991 and that accepted waste at any time since November 8, 1987, or that have additional capacity available for future waste deposition, as described in 40 CFR part 60, subpart Cc.

§ 62.12127 Effective date.

The effective date of the plan for municipal solid waste landfills is July 23, 2001.

EMISSIONS FROM EXISTING HOSPITAL/MEDICAL/INFECTIOUS WASTE INCINERATORS (HMIWIS)—SECTION 111(d)/129 PLAN

SOURCE: Sections 62.12150 through 62.12152 appear at 65 FR 37049, June 13, 2000, unless otherwise noted.

§ 62.12150 Identification of plan.

Section 111(d)/129 plan for HMIWIs and the associated West Virginia (WV) Department of Environmental Protection regulations, as submitted on August 18, 1999, and as amended on April 19, 2000.

§ 62.12151 Identification of sources.

The plan applies to all existing WV HMIWI for which construction was commenced on or before June 20, 1996.

§ 62.12152 Effective date.

The effective date of the plan is July 28, 2000.

EMISSIONS FROM EXISTING COMMERCIAL INDUSTRIAL SOLID WASTE INCINERATORS (CISWI) UNITS—SECTION 111(D)/129 PLANS

§ 62.12155 Identification of plan.

Section 111(d)/129 CISWI plan submitted on November 29, 2001, amended September 25, 2002, and January 22, 2003.

[68 FR 17741, Apr. 11, 2003]

§ 62.12156 Identification of sources.

The plan applies to the Dupont CISWI unit located in Wood County, West Virginia.

[68 FR 17741, Apr. 11, 2003]

§ 62.12157 Effective date.

The effective date of the plan is June 10, 2003.

[68 FR 17741, Apr. 11, 2003]

EMISSIONS FROM EXISTING SMALL MUNICIPAL WASTE COMBUSTION UNITS

§62.12160 Identification of plan—negative declaration.

Letter from the West Virginia Department of Environmental Protection, Division of Air Quality, submitted July 3, 2001, certifying that there are no existing small municipal waste combustion units within the State of West Virginia that are subject to 40 CFR part 60, subpart BBBB.

[68 FR 28774, May 27, 2003]

EFFECTIVE DATE NOTE: At 68 FR 28774, May 27, 2003, Subpart XX was amended by adding an undesignated center heading and §62.12160, effective July 28, 2003.

Subpart YY—Wisconsin

FLUORIDE EMISSIONS FROM PHOSPHATE FERTILIZER PLANTS

§62.12350 Identification of plan—negative declaration.

The State Department of Natural Resources submitted on May 24, 1977, a letter certifying that there are no existing phosphate fertilizer plants in the State subject to part 60, subpart B of this chapter.

EMISSIONS FROM EXISTING MUNICIPAL WASTE COMBUSTORS WITH THE CAPACITY TO BURN GREATER THAN 250 TONS PER DAY OF MUNICIPAL SOLID WASTE

§62.12360 Identification of plan—negative declaration.

Letter from the Department of Natural Resources submitted September 26, 1997 certifying that there are no existing municipal waste combustor units in the State of Wisconsin that are subject to part 60, subpart Cb, of this chapter.

[65 FR 33467, May 24, 2000]

Subpart ZZ—Wyoming

SOURCE: 63 FR 29646, June 1, 1998, unless otherwise noted.

LANDFILL GAS EMISSIONS FROM EXISTING MUNICIPAL SOLID WASTE LANDFILLS

§62.12600 Identification of plan.

Section 35, ''Municipal Solid Waste Landfills,'' of the Wyoming Air Quality Standards and Regulations and associated documentation submitted by the State on February 13, 1998.

§62.12601 Identification of sources.

The plan applies to all existing municipal solid waste landfills for which construction, reconstruction, or modification was commenced before May 30, 1991 that accepted waste at any time since November 8, 1987 or that have additional capacity available for future waste deposition, as described in 40 CFR part 60, subpart CC.

§62.12602 Effective date.

The effective date of the plan for municipal solid waste landfills is July 31, 1998.

AIR EMISSIONS FROM HOSPITAL/MEDICAL/INFECTIOUS WASTE INCINERATORS

SOURCE: Sections 62.12610 through 62.12612 appear at 65 FR 38740, June 22, 2000, unless otherwise noted.

§62.12610 Identification of plan.

Section 111(d) Plan for Hospital/Medical/Infectious Waste Incinerators and the associated State regulation, Chapter 4, section 5, of the Wyoming Air Quality Standards and Regulations, submitted by the State on September 7, 1999 and November 9, 1999.

§62.12611 Identification of sources.

The plan applies to all existing hospital/medical/infectious waste incinerators for which construction was commenced on or before June 20, 1996, as described in 40 CFR part 60, subpart Ce.

§62.12612 Effective date.

The effective date for the portion of the plan applicable to existing hospital/medical/infectious waste incinerators is August 21, 2000.

EMISSIONS FROM EXISTING MUNICIPAL WASTE COMBUSTORS WITH THE CAPACITY TO BURN GREATER THAN 250 TONS PER DAY OF MUNICIPAL SOLID WASTE

§ 62.12620 Identification of plan—negative declaration.

Letter from the Department of Environmental Quality submitted October 29, 1996 certifying that there are no existing municipal waste combustor units in the State of Wyoming that are subject to part 60, subpart Cb, of this chapter.

[65 FR 33468, May 24, 2000]

Subpart AAA [Reserved]

Subpart BBB—Puerto Rico

FLUORIDE EMISSIONS FROM PHOSPHATE FERTILIZER PLANTS

§ 62.13100 Identification of plan—negative declaration

The Commonwealth Environmental Quality Board submitted, on January 31, 1978, a letter certifying that there are no existing phosphate fertilizer plants in Commonwealth subject to part 60, subpart B of this chapter.

[44 FR 41180, July 16, 1979]

SULFURIC ACID MIST EMISSIONS FROM SULFURIC ACID PRODUCTION PLANTS

§ 62.13101 Identification of plan—negative declaration.

The Commonwealth Environmental Quality Board submitted, on January 31, 1978, a letter certifying that there are no existing sulfuric acid plants in the Commonwealth subject to part 60, subpart B of this chapter.

[45 FR 37432, June 3, 1980; 46 FR 27342, May 19, 1981]

FLUORIDE EMISSIONS FROM PRIMARY ALUMINUM REDUCTION PLANTS

§ 62.13102 Identification of plan—negative declaration.

The Commonwealth of Puerto Rico submitted on April 28, 1981, a letter certifying that there are no existing primary aluminum plants in the Commonwealth subject to part 60 subpart B of this chapter.

[46 FR 43834, Sept. 1, 1981]

TOTAL REDUCED SULFUR FROM KRAFT PULP MILLS

§ 62.13103 Identification of plan—negative declaration.

The Commonwealth of Puerto Rico submitted on April 28, 1981, a letter certifying that there are no existing kraft pulp mills in the Commonwealth subject to part 60 subpart B of this chapter.

[46 FR 43834, Sept. 1, 1981]

EMISSIONS FROM EXISTING MUNICIPAL WASTE COMBUSTORS WITH THE CAPACITY TO BURN GREATER THAN 250 TONS PER DAY OF MUNICIPAL SOLID WASTE

§ 62.13104 Identification of plan—negative declaration.

Letter from the Office of the Governor submitted December 12, 1996 certifying that there are no existing municipal waste combustor units in the Territory of Puerto Rico that are subject to part 60, subpart Cb, of this chapter.

[65 FR 33468, May 24, 2000]

AIR EMISSIONS FROM EXISTING SMALL MUNICIPAL WASTE COMBUSTION UNITS WITH THE CAPACITY TO COMBUST AT LEAST 35 TONS PER DAY BUT NO MORE THAN 250 TONS PER DAY OF MUNICIPAL SOLID WASTE OR REFUSE DERIVED FUEL AND CONSTRUCTED ON OR BEFORE AUGUST 30, 1999

§ 62.13105 Identification of plan—negative declaration.

Letter from the Puerto Rico Environmental Quality Board, submitted August 2, 2001, certifying that there are no existing small municipal waste combustion units in the Commonwealth of Puerto Rico subject to part 60, subpart BBBB of this chapter.

[66 FR 54718, Oct. 30, 2001]

CONTROL OF AIR EMISSIONS OF DESIGNATED POLLUTANTS FROM EXISTING HOSPITAL, MEDICAL, AND INFECTIOUS WASTE INCINERATORS

§62.13106 Identification of plan.

(a) The Puerto Rico Environmental Quality Board submitted to the Environmental Protection Agency on February 20, 2001, a ''State Plan for implementation and enforcement of 40 CFR part 60, subpart Ce, Emission Guidelines and Compliance Times for Hospital/Medical/Infectious Waste Incinerators.

(b) Identification of sources: The plan applies to all applicable existing hospital/medical/infectious waste incinerators for which construction commenced on or before June 20, 1996.

[67 FR 41181, June 17, 2002]

LANDFILL GAS EMISSIONS FROM EXISTING MUNICIPAL SOLID WASTE LANDFILLS (SECTION 111(D) PLAN)

§62.13107 Identification of plan.

(a) The Puerto Rico Environmental Quality Board submitted to the Environmental Protection Agency a ''State Plan for implementation and enforcement of 40 CFR part 60, subpart Cc, Emission Guidelines and Compliance Times for Municipal Solid Waste Landfills on February 20, 2001.''

(b) Identification of sources: The plan applies to all applicable existing municipal solid waste landfills for which construction, reconstruction, or modification commenced before May 30, 1991; and for which waste has been accepted at any time since November 8, 1987 or that have added capacity for future waste deposition.

[67 FR 46600, July 16, 2002]

Subpart CCC—Virgin Islands

FLUORIDE EMISSIONS FROM PHOSPHATE FERTILIZER PLANTS

§62.13350 Identification of plan—negative declaration.

The Territory Department of Conservation and Cultural Affairs submitted, on November 3, 1977, a letter certifying that there are no existing phosphate fertilizer plants in the Territory subject to part 60, subpart B of this chapter.

[44 FR 41181, July 16, 1979]

SULFURIC ACID MIST EMISSIONS FROM SULFURIC ACID PLANTS

§62.13351 Identification of plan—negative declaration.

The Territory Department of Conservation and Cultural Affairs submitted, on November 8, 1977, a letter certifying that there are no existing sulfuric acid plants in the Territory subject to part 60, subpart B of this chapter.

[45 FR 37432, June 3, 1980; 46 FR 27342, May 19, 1981]

TOTAL REDUCED SULFUR EMISSIONS FROM KRAFT PULP MILLS

§62.13352 Identification of plan—negative declaration.

The Virgin Islands Department of Conservation and Cultural Affairs submitted, on July 31, 1979, a letter certifying that there are no existing kraft pulp mills in the Territory subject to part 60, subpart B of this chapter.

[45 FR 80826, Dec. 8, 1980; 46 FR 27342, May 19, 1981]

FLUORIDE EMISSIONS FROM PRIMARY ALUMINUM REDUCTION PLANTS

§62.13353 Identification of plan—negative declaration.

The Virgin Islands Department of Conservation and Cultural Affairs submitted, on July 21, 1980, a letter certifying that there are no primary aluminum plants in the Territory subject to part 60, subpart B of this chapter.

[46 FR 30497, June 9, 1981]

EMISSIONS FROM EXISTING MUNICIPAL WASTE COMBUSTORS WITH THE CAPACITY TO BURN GREATER THAN 250 TONS PER DAY OF MUNICIPAL SOLID WASTE

§62.13354 Identification of plan—negative declaration.

Letter from the Department of Planning and Natural Resources submitted September 29, 1997 certifying that there are no existing municipal waste combustor units in the Territory of Virgin

Islands that are subject to part 60, subpart Cb, of this chapter.

[65 FR 33468, May 24, 2000]

AIR EMISSIONS FROM EXISTING SMALL MUNICIPAL WASTE COMBUSTION UNITS WITH THE CAPACITY TO COMBUST AT LEAST 35 TONS PER DAY BUT NO MORE THAN 250 TONS PER DAY OF MUNICIPAL SOLID WASTE OR REFUSE DERIVED FUEL AND CONSTRUCTED ON OR BEFORE AUGUST 30, 1999

§ 62.13355 Identification of plan—negative declaration.

Letter from the Virgin Islands Department of Planning and Natural Resources, submitted July 17, 2002, certifying that there are no existing small municipal waste combustion units in the Territory of the United States Virgin Islands subject to part 60, subpart BBBB of this chapter.

[67 FR 76119, Dec. 11, 2002]

AIR EMISSIONS FROM EXISTING COMMERCIAL AND INDUSTRIAL SOLID WASTE INCINERATION UNITS CONSTRUCTED ON OR BEFORE NOVEMBER 30, 1999 OR RECONSTRUCTED OR MODIFIED PRIOR TO JUNE 1, 2001

§ 62.13356 Identification of plan—negative declaration.

Letter from the Virgin Islands Department of Planning and Natural Resources, submitted October 25, 2002, certifying that there are no existing commercial and industrial solid waste incineration units in the Territory of the United States Virgin Islands subject to part 60, subpart DDDD of this chapter.

[68 FR 9022, Feb. 27, 2003]

Subparts DDD—EEE [Reserved]

Subpart FFF—Federal Plan Requirements for Large Municipal Waste Combustors Constructed on or Before September 20, 1994

SOURCE: 63 FR 63202, Nov. 12, 1998, unless otherwise noted.

§ 62.14100 Scope and delegation of authority.

(a) This subpart contains emission requirements and compliance schedules for the control of pollutants from certain municipal waste combustors in accordance with section 111(d) and section 129 of the Clean Air Act and 40 CFR part 60, subparts B and Cb. This municipal waste combustor Federal plan applies to each affected facility as defined in § 62.14102 that is not covered by an EPA approved and currently effective State or Tribal plan. This Federal plan, or portions thereof, also applies to each affected facility in any State whose approved State plan is subsequently vacated in whole or in part. This Federal plan, or portions thereof, also applies to each affected facility located in Indian country if the approved Tribal plan for that area is subsequently vacated in whole or in part.

(b) The following authorities shall be retained by the EPA Administrator and not transferred to the State upon delegation of authority to the State to implement and enforce the Federal plan:

(1) An alternative emission standard;

(2) Major alternatives to test methods;

(3) Major alternatives to monitoring;

(4) Waiver of recordkeeping; and

(5) Waiver of training requirement for chief facility operators, shift supervisors, and control room operators who have obtained provisional certification on or before the effective date of this subpart, as provided in § 62.14105(d)(2) of this subpart.

§ 62.14101 Definitions.

Terms used but not defined in this subpart have the meaning given to them in the Clean Air Act and 40 CFR part 60, subparts A, B, and Eb.

Contract means a legally binding agreement or obligation that cannot be canceled or modified without substantial financial loss.

De-rate means to make a permanent physical change to the municipal waste combustor unit that reduces the maximum combustion capacity of the unit to less than or equal to 250 tons per day of municipal solid waste. A permit restriction or a change in the method of

operation does not qualify as de-rating. (See the procedures specified in 40 CFR 60.58b(j) of subpart Eb for calculating municipal waste combustor unit capacity.)

EPA approved State plan means a State plan that EPA has reviewed and approved based on the requirements in 40 CFR part 60, subpart B to implement and enforce 40 CFR part 60, subpart Cb. An approved State plan becomes effective on the date specified in the notice published in the FEDERAL REGISTER announcing EPA's approval.

Municipal waste combustor plant means one or more affected facilities (as defined in §62.14102) at the same location.

Protectorate means American Samoa, the Commonwealth of Puerto Rico, the District of Columbia, Guam, the Northern Mariana Islands, and the Virgin Islands.

State means any of the 50 United States and the protectorates of the United States.

State plan means a plan submitted pursuant to section 111(d) and section 129(b)(2) of the Clean Air Act and 40 CFR part 60, subpart B that implements and enforces 40 CFR part 60, subpart Cb.

Tribal plan means a plan submitted by a Tribal Authority pursuant to 40 CFR parts 9, 35, 49, 50, and 81 that implements and enforces 40 CFR part 60, subpart Cb.

§62.14102 Affected facilities.

(a) The affected facility to which this subpart applies is each municipal waste combustor unit with a capacity to combust greater than 250 tons per day of municipal solid waste for which construction was commenced on or before September 20, 1994 that is not regulated by an EPA approved and currently effective State or Tribal plan. Table 1 of this subpart lists those units regulated by an EPA approved State plan. Notwithstanding the exclusions in table 1 of this subpart, this subpart applies to affected facilities not regulated by an EPA approved and currently effective State or Tribal plan.

(b) A municipal waste combustor unit regulated by an EPA approved and currently effective State or Tribal plan is not regulated by this subpart.

(c) Any municipal waste combustor unit that has the capacity to combust more than 250 tons per day of municipal solid waste and is subject to a Federally enforceable permit limiting the maximum amount of municipal solid waste that may be combusted in the unit to less than 11 tons per day is not subject to this subpart if the owner or operator:

(1) Notifies the EPA Administrator of an exemption claim;

(2) Provides a copy of the Federally enforceable permit that limits the firing of municipal solid waste to less than 11 tons per day; and

(3) Keeps records of the amount of municipal solid waste fired on a daily basis.

(d) Physical or operational changes made to an existing municipal waste combustor unit primarily for the purpose of complying with the emission requirements of this subpart are not considered in determining whether the unit is a modified or reconstructed facility under 40 CFR part 60, subpart Ea or subpart Eb.

(e) A qualifying small power production facility, as defined in section 3(17)(C) of the Federal Power Act (16 U.S.C. 796(17)(C)), that burns homogeneous waste (such as automotive tires or used oil, but not including refuse-derived fuel) for the production of electric energy is not subject to this subpart if the owner or operator of the facility notifies the EPA Administrator of this exemption and provides data documenting that the facility qualifies for this exemption.

(f) A qualifying cogeneration facility, as defined in section 3(18)(B) of the Federal Power Act (16 U.S.C. 796(18)(B)), that burns homogeneous waste (such as automotive tires or used oil, but not including refuse-derived fuel) for the production of electric energy and steam or forms of useful energy (such as heat) that are used for industrial, commercial, heating, or cooling purposes, is not subject to this subpart if the owner or operator of the facility notifies the EPA Administrator of this exemption and provides data documenting that the facility qualifies for this exemption.

(g) Any unit combusting a single-item waste stream of tires is not subject to this subpart if the owner or operator of the unit:

(1) Notifies the EPA Administrator of an exemption claim; and

(2) Provides data documenting that the unit qualifies for this exemption.

(h) Any unit required to have a permit under section 3005 of the Solid Waste Disposal Act is not subject to this subpart.

(i) Any materials recovery facility (including primary or secondary smelters) that combusts waste for the primary purpose of recovering metals is not subject to this subpart.

(j) Any cofired combustor, as defined under 40 CFR 60.51b of subpart Eb that meets the capacity specifications in paragraph (a) of this section is not subject to this subpart if the owner or operator of the cofired combustor:

(1) Notifies the EPA Administrator of an exemption claim;

(2) Provides a copy of the Federally enforceable permit (specified in the definition of cofired combustor in this section); and

(3) Keeps a record on a calendar quarter basis of the weight of municipal solid waste combusted at the cofired combustor and the weight of all other fuels combusted at the cofired combustor.

(k) Air curtain incinerators, as defined under 40 CFR 60.51b, that meet the capacity specifications in paragraph (a) of this section, and that combust a fuel stream composed of 100 percent yard waste are exempt from all provisions of this subpart except the opacity standard under § 62.14107, and the testing procedures and the reporting and recordkeeping provisions under § 62.14109.

(l) Air curtain incinerators that meet the capacity specifications in paragraph (a) of this section and that combust municipal solid waste other than yard waste are subject to all provisions of this subpart.

(m) Pyrolysis/combustion units that are an integrated part of a plastics/rubber recycling unit (as defined in 40 CFR 60.51b) are not subject to this subpart if the owner or operator of the plastics/rubber recycling unit keeps records of the weight of plastics, rubber, and/or rubber tires processed on a calendar quarter basis; the weight of chemical plant feedstocks and petroleum refinery feedstocks produced and marketed on a calendar quarter basis; and the name and address of the purchaser of the feedstocks. The combustion of gasoline, diesel fuel, jet fuel, fuel oils, residual oil, refinery gas, petroleum coke, liquefied petroleum gas, propane, or butane produced by chemical plants or petroleum refineries that use feestocks produced by plastics/rubber recycling units are not subject to this subpart.

(n) Cement kilns firing municipal solid waste are not subject to this subpart.

[63 FR 63202, Nov. 12, 1998; 64 FR 17219, Apr. 8, 1999]

§ 62.14103 Emission limits for municipal waste combustor metals, acid gases, organics, and nitrogen oxides.

(a) The emission limits for municipal waste combustor metals are specified in paragraphs (a)(1) through (a)(3) of this section.

(1) The owner or operator of an affected facility must not cause to be discharged into the atmosphere from that affected facility any gases that contain: particulate matter in excess of 27 milligrams per dry standard cubic meter, corrected to 7 percent oxygen; and opacity in excess of 10 percent (6-minute average).

(2) The owner or operator of an affected facility must not cause to be discharged into the atmosphere from that affected facility any gases that contain: cadmium in excess of 0.040 milligrams per dry standard cubic meter, corrected to 7 percent oxygen; and lead in excess of 0.44 milligrams per dry standard cubic meter, corrected to 7 percent oxygen.

(3) The owner or operator of an affected facility must not cause to be discharged into the atmosphere from that affected facility any gases that contain mercury in excess of 0.080 milligrams per dry standard cubic meter or 15 percent of the potential mercury emission concentration (85-percent reduction by weight), corrected to 7 percent oxygen, whichever is less stringent.

(b) The emission limits for municipal waste combustor acid gases, expressed as sulfur dioxide and hydrogen chloride, are specified in paragraphs (b)(1) and (b)(2) of this section.

(1) The owner or operator of an affected facility must not cause to be discharged into the atmosphere from that affected facility any gases that contain sulfur dioxide in excess of 29 parts per million by volume or 25 percent of the potential sulfur dioxide emission concentration (75-percent reduction by weight or volume), corrected to 7 percent oxygen (dry basis), whichever is less stringent. Compliance with this emission limit is based on a 24-hour daily geometric mean.

(2) The owner or operator of an affected facility must not cause to be discharged into the atmosphere from that affected facility any gases that contain hydrogen chloride in excess of 29 parts per million by volume or 5 percent of the potential hydrogen chloride emission concentration (95-percent reduction by weight or volume), corrected to 7 percent oxygen (dry basis), whichever is less stringent.

(c) The owner or operator of an affected facility must not cause to be discharged into the atmosphere from that affected facility any gases that contain municipal waste combustor organics, expressed as total mass dioxins/furans, in excess of the emission limits specified in either paragraph (c)(1) or (c)(2) of this section, as applicable.

(1) The emission limit for affected facilities that employ an electrostatic precipitator-based emission control system is 60 nanograms per dry standard cubic meter (total mass), corrected to 7 percent oxygen.

(2) The emission limit for affected facilities that do not employ an electrostatic precipitator-based emission control system is 30 nanograms per dry standard cubic meter (total mass), corrected to 7 percent oxygen.

(d) The owner or operator of an affected facility must not cause to be discharged into the atmosphere from that affected facility any gases that contain nitrogen oxides in excess of the emission limits listed in table 2 of this subpart for affected facilities. Table 2 of this subpart provides emission limits for the nitrogen oxides concentration level for each type of affected facility.

§62.14104 Requirements for municipal waste combustor operating practices.

(a) The owner or operator of an affected facility must not cause to be discharged into the atmosphere from that affected facility any gases that contain carbon monoxide in excess of the emission limits listed in table 3 of this subpart. Table 3 provides emission limits for the carbon monoxide concentration level for each type of affected facility.

(b) The owner or operator of an affected facility must comply with the municipal waste combustor operating practice requirements listed in 40 CFR 60.53b(b) and (c) of subpart Eb. For calculating the steam (or feedwater) flow required under 40 CFR 60.58(i)(6)(i), proceed in accordance with ASME PTC 4.1–1964 (Reaffirmed 1991), Power Test Codes: Test Code for Steam Generating Units (with 1968 and 1969 Addenda). For design, construction, installation, calibration, and use of nozzles and orifices required in 40 CFR 60.58(i)(6)(ii), proceed in accordance with the recommendations in ASME Interim Supplement 19.5 on Instruments and Apparatus: Application, Part II of Fluid Meters, 6th Edition (1971). The Director of the Federal Register approves these incorporations by reference in accordance with 5 U.S.C. 552(a) and 1 CFR part 51. You may obtain a copy from the American Society of Mechanical Engineers, Service Center, 22 Law Drive, Post Office Box 2900, Fairfield, NJ 07007. You may inspect a copy at the Office of Air Quality Planning and Standards Air Docket, EPA, Mutual Building, Room 540, 411 West Chapel Hill Street, Durham, NC 27701, or at the Office of the Federal Register, 800 North Capitol Street, NW., Suite 700, Washington, D.C.

§62.14105 Requirements for municipal waste combustor operator training and certification.

The owner or operator of an affected facility must comply with the municipal waste combustor operator training and certification requirements listed in paragraphs (a) through (g) of this section. For affected facilities, compliance

with the municipal waste combustor operator training and certification requirements specified under paragraphs (a), (b), (d), and (g) of this section must be no later than 12 months after the effective date of this subpart.

(a) Each chief facility operator and shift supervisor must obtain and maintain a current provisional operator certification from either the American Society of Mechanical Engineers QRO–1–1994 or a State certification program in Connecticut and Maryland (if the affected facility is located in either of the respective States). If ASME certification is chosen, proceed in accordance with ASME QRO–1–1994, Standard for the Qualification and Certification of Resource Recovery Facility Operators. The Director of the Federal Register approves this incorporation by reference in accordance with 5 U.S.C. 552(a) and 1 CFR part 51. You may obtain a copy from the American Society of Mechanical Engineers, Service Center, 22 Law Drive, Post Office Box 2900, Fairfield, NJ 07007. You may inspect a copy at the Office of Air Quality Planning and Standards Air Docket, EPA, Mutual Building, Room 540, 411 West Chapel Hill Street, Durham, NC 27701 or at the Office of the Federal Register, 800 North Capitol Street, NW., Suite 700, Washington, DC.

(b) Each chief facility operator and shift supervisor must have completed full certification or must have scheduled a full certification exam with either the American Society of Mechanical Engineers QRO–1–1994 or a State certification program in Connecticut and Maryland (if the affected facility is located in either of the respective States). If ASME certification is chosen, proceed in accordance with ASME QRO–1–1994, Standard for the Qualification and Certification of Resource Recovery Facility Operators. The Director of the Federal Register approves this incorporation by reference in accordance with 5 U.S.C. 552(a) and 1 CFR part 51. You may obtain a copy from the American Society of Mechanical Engineers, Service Center, 22 Law Drive, Post Office Box 2900, Fairfield, NJ 07007. You may inspect a copy at the Office of Air Quality Planning and Standards Air Docket, EPA, Mutual Building, Room 540, 411 West Chapel Hill Street, Durham, NC 27701 or at the Office of the Federal Register, 800 North Capitol Street, NW., Suite 700, Washington, DC.

(c) The owner or operator of an affected facility must not allow the facility to be operated at any time unless one of the following persons is on duty at the affected facility: a fully certified chief facility operator; a provisionally certified chief facility operator who is scheduled to take the full certification exam no later than 12 months after the effective date of this subpart; a fully certified shift supervisor; or a provisionally certified shift supervisor who is scheduled to take the full certification exam no later than 12 months after the effective date of this subpart. If one of the persons listed in this paragraph must leave the affected facility during their operating shift, a provisionally certified control room operator who is onsite at the affected facility may fulfill the requirement in this paragraph.

(d)(1) Each chief facility operator, shift supervisor, and control room operator at an affected facility must complete the EPA municipal waste combustor operator training course or the State municipal waste combustor operator training course in Connecticut (if the affected facility is located in Connecticut).

(2) The requirement specified in this paragraph does not apply to chief facility operators, shift supervisors, and control room operators who have obtained full certification from the American Society of Mechanical Engineers on or before the effective date of this subpart. The owner or operator of an affected facility may request that the EPA Administrator waive the requirement specified in this paragraph for chief facility operators, shift supervisors, and control room operators who have obtained provisional certification from the American Society of Mechanical Engineers on or before the effective date of this subpart.

(e) The owner or operator of an affected facility must develop and update on a yearly basis a site-specific operating manual that must, at a minimum, address the elements of municipal waste combustor unit operation

specified in paragraphs (e)(1) through (e)(11) of this section.

(1) A summary of the applicable standards under this subpart;

(2) A description of basic combustion theory applicable to a municipal waste combustor unit;

(3) Procedures for receiving, handling, and feeding municipal solid waste;

(4) Procedures for municipal waste combustor unit startup, shutdown, and malfunction;

(5) Procedures for maintaining proper combustion air supply levels;

(6) Procedures for operating the municipal waste combustor unit within the standards established under this subpart;

(7) Procedures for responding to periodic upset or off-specification conditions;

(8) Procedures for minimizing particulate matter carryover;

(9) Procedures for handling ash;

(10) Procedures for monitoring municipal waste combustor unit emissions; and

(11) Reporting and recordkeeping procedures.

(f) The owner or operator of an affected facility must establish a training program to review the operating manual according to the schedule specified in paragraphs (f)(1) and (f)(2) of this section with each person who has responsibilities affecting the operation of an affected facility including, but not limited to, chief facility operators, shift supervisors, control room operators, ash handlers, maintenance personnel, and crane/load handlers.

(1) Each person specified in paragraph (f) of this section must undergo initial training no later than the date specified in paragraph (f)(1)(i) or (f)(1)(ii) of this section, whichever is later.

(i) The date prior to the day the person assumes responsibilities affecting municipal waste combustor unit operation; or

(ii) The date 12 months after the effective date of this subpart.

(2) Annually, following the initial review required by paragraph (f)(1) of this section.

(g) The operating manual required by paragraph (e) of this section must be kept in a location readily accessible to each person required to undergo training under paragraph (f) of this section. The operating manual and records of training must be available for inspection by the EPA or its delegated enforcement agency upon request.

§62.14106 Emission limits for municipal waste combustor fugitive ash emissions.

(a) The owner or operator of an affected facility must not cause to be discharged to the atmosphere from that affected facility visible emissions of combustion ash from an ash conveying system (including conveyor transfer points) in excess of 5 percent of the observation period (i.e., 9 minutes per 3-hour period), as determined by EPA Reference Method 22 observations as specified in 40 CFR 60.58b(k) of subpart Eb, except as provided in paragraphs (b) and (c) of this section.

(b) The emission limit specified in paragraph (a) of this section does not cover visible emissions discharged inside buildings or enclosures of ash conveying systems; however, the emission limit specified in paragraph (a) of this section does cover visible emissions discharged to the atmosphere from buildings or enclosures of ash conveying systems.

(c) The provisions specified in paragraph (a) of this section do not apply during maintenance and repair of ash conveying systems.

§62.14107 Emission limits for air curtain incinerators.

The owner or operator of an air curtain incinerator with the capacity to combust greater than 250 tons per day of municipal solid waste and that combusts a fuel feed stream composed of 100 percent yard waste and no other municipal solid waste materials must not (at any time) cause to be discharged into the atmosphere from that incinerator any gases that exhibit greater than 10-percent opacity (6-minute average), except that an opacity level of up to 35 percent (6-minute average) is permitted during startup periods during the first 30 minutes of operation of the unit.

§ 62.14108 Compliance schedules.

(a) The owner or operator of an affected facility must achieve the increments of progress specified in paragraphs (a)(1) through (a)(5) to retrofit air pollution control devices to meet the emission limits of this subpart. As specified in 40 CFR part 60, subpart B, the compliance schedules and increments of progress apply to each owner or operator of an affected facility who is taking longer than 1 year after the date of publication of this subpart FFF final rule to comply with the emission limits specified in this subpart.

(1) Submit a final control plan according to the requirements of § 62.14109(g).

(2) Award contract(s): Award contract(s) to initiate on-site construction, initiate on-site installation of emission control equipment, or incorporate process changes. The owner or operator must submit a signed copy of the contract(s) awarded according to the requirements of § 62.14109(h).

(3) Initiate on-site construction: Initiate on-site construction, initiate on-site installation of emission control equipment, or initiate process changes needed to meet the emission limits as outlined in the final control plan.

(4) Complete on-site construction: Complete on-site construction and installation of emission control equipment or complete process changes.

(5) Achieve final compliance: Incorporate all process changes or complete retrofit construction as designed in the final control plan and connect the air pollution control equipment or process changes with the affected facility identified in the final control plan such that if the affected facility is brought on line, all necessary process changes or air pollution control equipment are operating fully. Within 180 days after the date the affected facility is required to achieve final compliance, the initial performance test must be conducted.

(b) The owner or operator of an affected facility must achieve the increments of progress specified in paragraphs (a)(1) through (a)(5) of this section according to the schedule specified in paragraphs (b)(1) through (b)(4) of this section, except as provided in paragraphs (c), (d), and (e) of this section.

(1) The owner or operator of an affected facility that commenced construction, modification, or reconstruction on or before June 26, 1987 and will take longer than 1 year after the date of publication of this subpart FFF (or 1 year after a revised construction permit or a revised operating permit is issued, if a permit modification is required) to comply with the emission limits of this subpart must achieve the increments of progress according to the schedule in table 4 of this subpart, except for those affected facilities specified in paragraphs (b)(3) and (b)(4) of this section.

(2) The owner or operator of an affected facility that began construction, modification, or reconstruction after June 26, 1987 must achieve the increments of progress according to the schedule in table 5 of this subpart to comply with the emission limits of this subpart, except for those affected facilities specified in paragraphs (b)(3) and (b)(4) of this section.

(3) The owner or operator of each specified affected facility in table 6 of this subpart must achieve the increments of progress according to the schedule in table 6 of this subpart.

(4) For affected facilities that are subject to the schedule requirements of paragraph (b)(1) or (b)(2) of this section, the owner or operator (or the State air pollution control authority) may submit for approval alternative dates for achieving increments 2, 3, and 4. The owner or operator (or the State air pollution control authority) that is submitting these alternative dates must meet the reporting requirements of § 62.14109(m).

(c) The owner or operator of an affected facility that has ceased operation but will reopen prior to the applicable final compliance date specified in paragraphs (b)(1) through (b)(4) of this section must meet the same compliance dates and increments of progress specified in paragraphs (b)(1) through (b)(4) of this section.

(d) The owner or operator of an affected facility that has ceased or ceases operation of an affected facility and restarts the affected facility after

the compliance dates specified in paragraphs (b)(1) through (b)(4) of this section must comply with the emission limits, requirements for combustor operating practices, and operator training and certification requirements of this subpart upon the date the affected facility restarts. The initial performance tests required by §62.14109(c) must be conducted within 180 days after the date the unit restarts.

(e) The owner or operator of an affected facility that will be de-rated prior to the applicable final compliance date instead of complying with the emission limits of this subpart must meet the same increments of progress and achieve the de-rating by the final compliance date (specified in paragraphs (b)(1) through (b)(4) of this section) that would be applicable to the affected facility if it did not de-rate. The owner or operator of an affected facility that will be de-rated must meet the reporting requirements of §62.14109k. After de-rating is accomplished, the municipal waste combustor affected facility is no longer subject to this subpart.

§62.14109 Reporting and recordkeeping and compliance and performance testing.

(a) The owner or operator of an affected facility must comply with the reporting and recordkeeping provisions listed in 40 CFR 60.59b of subpart Eb, except as provided in paragraphs (a)(1) through (a)(3) of this section.

(1) The siting requirements under 40 CFR 60.59b(a), (b)(5), and (d)(11) of subpart Eb and the notification of construction requirements under 40 CFR 60.59b(b) and (c) of subpart Eb do not apply.

(2) 40 CFR 60.54b, 60.56b, and 60.58b(g)(5)(iii) of subpart Eb do not apply to this subpart (see §§62.14105 and 62.14107 of this subpart).

(b) The owner or operator of an affected facility must comply with the compliance and performance testing methods and procedures listed in 40 CFR 60.58b of subpart Eb, except as provided in paragraphs (c) and (d) of this section.

(c) The initial performance test must be completed within 180 days after the date of final compliance specified in §62.14108, rather than the date for the initial performance test specified in 40 CFR 60.58b of subpart Eb.

(d) The owner or operator of an affected facility may follow the alternative performance testing schedule for dioxin/furan emissions specified in paragraph (d)(1) of this section.

(1) If all performance tests for all affected facilities at the MWC plant over a 2-year period indicate that dioxin/furan emissions are less than or equal to 15 nanograms per dry standard cubic meter total mass, corrected to 7 percent oxygen for all affected facilities located within a municipal waste combustor plant, the owner or operator of the municipal waste combustor plant may elect to conduct annual performance tests for one affected facility (i.e., unit) per year at the municipal waste combustor plant. At a minimum, a performance test for dioxin/furan emissions shall be conducted annually (no more than 12 months following the previous performance test) for one affected facility at the municipal waste combustor plant. Each year a different affected facility at the municipal waste combustor plant shall be tested, and the affected facilities at the plant shall be tested in sequence (e.g., unit 1, unit 2, unit 3, as applicable). If each annual performance test continues to indicate a dioxin/furan emission level less than or equal to 15 nanograms per dry standard cubic meter (total mass), the owner or operator may continue conducting a performance test on only one affected facility per year. If any annual performance test indicates a dioxin/furan emission level greater than 15 nanograms per dry standrd cubic meter (total mass), performance tests thereafter shall be conducted annually on all affected facilities at the plant until and unless all annual performance tests for all affected facilities at the plant over a 2-year period indicate a dioxin/furan emission level less than or equal to 15 nanograms per dry standard cubic meter (total mass).

(2) The owner or operator who is following the alternative performance testing schedule for dioxin/furan emissions specified in paragraph (d)(1) of this section may choose an alternative testing sequence (e.g., unit 1, 3, 2, 4) for affected facilities at the municipal

waste combustor plant. The owner or operator must submit a request to EPA for approval of the alternative testing sequence. After approval, the alternative testing sequence is effective until a different testing sequence is received and approved by EPA.

(e) The owner or operator of an affected facility that is taking longer than 1 year after the date of publication of this subpart FFF final rule to comply with the emission limits of this subpart must submit notification to the EPA Regional Office within 10 business days of completing each increment. Each notification must indicate which increment of progress specified in § 62.14108(a)(1) through (a)(5) has been achieved. The notification must be signed by the owner or operator of the affected facility.

(f) The owner or operator of an affected facility that is taking longer than 1 year after the date of publication of this subpart FFF to comply with the emission limits of this subpart who fails to meet any increment of progress specified in § 62.14108(a)(1) through (a)(5) according to the applicable schedule in § 62.14108 must submit notification to the EPA Regional Office within 10 business days of the applicable date in § 62.14108 that the owner or operator failed to meet the increment.

(g) The owner or operator of an affected facility that is taking longer than 1 year after the date of publication of this subpart FFF to comply with the emission limits of this subpart must submit a final control plan by the date specified in § 62.14108(b) with the notification required by § 62.14109(e). The final control plan must, at a minimum, include a description of the air pollution control devices or process changes that will be employed for each unit to comply with the emission limits and other requirements of this subpart.

(h) The owner or operator of an affected facility that is taking longer than 1 year after the date of publication of this subpart FFF to comply with the emission limits of this subpart must submit a signed copy of the contract or contracts awarded according to the requirements of § 62.14108(a)(2) with the notification required by § 62.14109(e).

(i) The owner or operator of an affected facility that is taking longer than 1 year after the date of publication of this subpart FFF to comply with the emission limits of this subpart must keep on site a copy of the final control plan required by § 62.14109(g).

(j) The owner or operator of an affected facility that plans to cease operation of the affected facility on or before December 19, 2000 rather than comply with the emission limits of this subpart by the applicable compliance date specified in § 62.14108 must submit a notification by the date specified for the final control plan according to the schedule specified in paragraphs § 62.14108(b)(1) through (b)(4), as applicable. (Affected facilities that cease operation on or before December 19, 2000 rather than comply with the emission limits of this subpart by the compliance date specified in § 62.14108 are not required to submit a final control plan.) The notification must state the date by which the affected facility will cease operation. If the cease operation date is later than 1 year after the date of publication of this subpart FFF, the owner or operator must enter into a legally binding closure agreement with EPA by the date the final control plan is due. The agreement must specify the date by which operation will cease.

(k) The owner or operator of an affected facility that plans to de-rate the affected facility on or before December 19, 2000 rather than comply with the emission limits of this subpart by the compliance date specified in § 62.14108 must submit a final control plan as required by paragraph (g) of this section and submit notification of increments of progress as required by paragraphs (e) and (f) of this section and § 62.14108(e) of this subpart.

(1) The final control plan must, at a minimum, include the information in paragraphs (k)(1)(i) and (k)(1)(ii) of this section rather than the information in paragraph (g) of this section.

(i) A description of the physical changes that will be made to accomplish the de-rating.

(ii) Calculations of the current maximum combustion capacity and the

planned maximum combustion capacity after the de-rating. (See the procedures specified in 40 CFR 60.58b(j) of subpart Eb for calculating municipal waste combustor unit capacity.)

(2) The owner or operator must submit a signed copy of the contract or contracts awarded to initiate the de-rating with the notification required by paragraph (e) of this section.

(l) The owner or operator of an affected facility that is ceasing operation more than 1 year following the date of publication of this subpart FFF must submit performance test results for dioxin/furan emissions conducted during or after 1990 for each affected facility by the date 1 year after the date of publication of this subpart FFF. The performance test shall be conducted according to the procedure in paragraph (b) of this section.

(m) The owner or operator (or the State air pollution control authority) that is submitting alternative dates for increments 2, 3, and 4 according to §62.14108(b)(4) must submit the alternative dates by the date specified for the final control plan according to the schedule specified in paragraphs §62.14108 (b)(1) and (b)(2), as applicable. The owner or operator (or the State air pollution control authority) must submit a justification if any of the alternative dates are later than the increment dates in tables 4 or 5 of this subpart. The owner or operator must also submit the alternative dates and justification to the State.

[63 FR 63202, Nov. 12, 1998; 64 FR 17219, Apr. 8, 1999]

TABLE 1 OF SUBPART FFF TO PART 62—MUNICIPAL WASTE COMBUSTOR UNITS (MWC UNITS) EXCLUDED FROM SUBPART FFF [1]

State	MWC units
Alabama	Existing facilities with an MWC unit capacity greater than 250 tons per day of municipal solid waste at the following MWC sites: (a) Solid Waste Disposal Authority of the City of Huntsville, Alabama.
Florida	Existing MWC units with capacity to combust more than 250 tons per day of municipal solid waste.
Georgia	Existing facilities with a MWC unit capacity greater than 250 tons per day of municipal solid waste at the following MWC sites: (a) Savannah Energy Systems Company, Savannah, Georgia.
Illinois	Existing MWC units located at Robbins Resource Recovery Center, Robbins, Illinois.
Maine	Existing facilities with an MWC unit capacity greater than 250 tons per day of municipal solid waste at the following MWC sites: (a) Penobscot Energy Recovery Company, Orrington, Maine. (b) Maine Energy Recovery Company, Biddeford, Maine. (c) Regional Waste Systems, Inc., Portland, Maine.
Maryland	Existing MWC facilities with an MWC unit capacity greater than 250 tons per day of municipal solid waste.
Minnesota	All MWC units with unit capacities greater than 93.75 million British thermal units per hour on a heat input basis (250 tons per day) located in Minnesota.
New York	Existing MWC units with capacity to combust more than 250 tons per day of municipal solid waste.
Oklahoma	Existing MWC facilities with an MWC unit capacity greater than 250 tons per day of municipal solid waste at the following MWC site: Ogden-Martin Systems of Tulsa, Incorporated, 2122 South Yukon Avenue, Tulsa, Oklahoma.
Oregon	Existing facilities at the following MWC sites: (a) Ogden Martin Systems, Marion County, Oregon. (b) Coos County, Coos Bay, Oregon.
Pennsylvania	Existing MWC facilities with an MWC unit capacity greater than 250 tons per day of municipal solid waste at the following MWC site: (a) American Ref-fuel of Delaware Valley, LP (formerly Delaware County Resource Recovery facility), City of Chester, PA. (b) Harrisburg Materials, Energy, Recycling and Recovery Facility, City of Harrisburg, PA. (c) Lancaster County Solid Waste Management Authority, Conoy Township, Lancaster County, PA. (d) Montenay Montgomery Limited Partnership, Plymouth Township, Montgomery County, PA. (e) Wheelabrator Falls, Inc., Falls Township, Bucks County, PA. (f) York County Solid Waste and Refuse Authority, York, PA.
South Carolina	Existing facilities with a MWC unit capacity greater than 250 tons per day of municipal solid waste at the following MWC sites: (a) Foster Wheeler Charleston Resource Recovery Facility, Charleston, South Carolina.
Tennessee	Existing MWC units with capacity to combust more than 250 tons per day of municipal solid waste.

[1] Notwithstanding the exclusions in table 1 of this subpart, this subpart applies to affected facilities not regulated by an EPA approved and currently effective State or Tribal plan.

[63 FR 63202, Nov. 12, 1998, as amended at 65 FR 33468, May 24, 2000]

TABLE 2 OF SUBPART FFF TO PART 62—NITROGEN OXIDES REQUIREMENTS FOR AFFECTED FACILITIES

Municipal waste combustor technology	Nitrogen oxides emission limit (parts per million by volume) [a]
Mass burn waterwall	205.
Mass burn rotary waterwall	250.
Refuse-derived fuel combustor	250.
Fluidized bed combustor	180.
Mass burn refractory combustors	No limit.

[a] Corrected to 7 percent oxygen, dry basis.

TABLE 3 OF SUBPART FFF TO PART 62—MUNICIPAL WASTE COMBUSTOR OPERATING REQUIREMENTS

Municipal waste combustor technology	Carbon monoxide emissions level (parts per million by volume) [a]	Averaging time (hrs) [b]
Mass burn waterwall	100	4
Mass burn refractory	100	4
Mass burn rotary refractory	100	24
Mass burn rotary waterwall	250	24
Modular starved air	50	4
Modular excess air	50	4
Refuse-derived fuel stoker	200	24
Bubbling fluidized bed combustor	100	4
Circulating fluidized bed combustor	100	4
Pulverized coal/refuse-derived fuel mixed fuel-fired combustor	150	4
Spreader stoker coal/refuse-derived fuel mixed fuel-fired combustor	200	24

[a] Measured at the combustor outlet in conjunction with a measurement of oxygen concentration, corrected to 7 percent oxygen, dry basis. Calculated as an arithmetic average.
[b] Averaging times are 4-hour or 24-hour block averages.

TABLE 4 OF SUBPART FFF TO PART 62—GENERIC COMPLIANCE SCHEDULE AND INCREMENTS OF PROGRESS (PRE-1987 MWCS) [A] [B]

Affected facilities	Increment 1 Submit final control plan	Increment 2 Award contracts	Increment 3 Begin on-site construction	Increment 4 Complete on-site construction	Increment 5 Final compliance
Affected facilities that commenced construction, modification, or reconstruction on or before June 26, 1987 (All pollutants).	January 11, 1999	05/18/99	11/16/99	11/19/00	12/19/00

[a] Table 4 or 5 of this subpart applies to MWC units subject to the Federal plan except those with site-specific compliance schedules shown in Table 6 of this subpart.
[b] As an alternative to this schedule, the owner or operator may close the affected facility by December 19, 2000, complete the retrofit while the affected facility is closed, and achieve final compliance upon restarting. See §§ 62.14108(c), 62.14108(d), and 62.14109(i) of this subpart.

TABLE 5 OF SUBPART FFF TO PART 62—GENERIC COMPLIANCE SCHEDULES AND INCREMENTS OF PROGRESS

[Post-1987 MWCs] [a] [b]

Affected facilities	Increment 1 Submit final control plan	Increment 2 Award contracts	Increment 3 Begin on-site construction	Increment 4 Complete on-site construction	Increment 5 Final compliance
Affected facilities that commenced construction modification, or reconstruction after June 26, 1987:					

[Post-1987 MWCs] [a] [b]

Affected facilities	Increment 1 Submit final control plan	Increment 2 Award contracts	Increment 3 Begin on-site construction	Increment 4 Complete on-site construction	Increment 5 Final compliance
1. Emission limits for Hg, dioxin/furan	NA[c]	NA[c]	NA[c]	NA[c]	11/12/99 or 1 year after permit issuance [d, e]
2. Emission limits for SO_2, HCl, PM, Pb, Cd, opacity CO, NO_X.	January 11, 1999.	05/18/99	11/16/99	11/19/00	12/19/00.

[a] Table 4 or 5 of this subpart applies to MWC units subject to the Federal plan except those with site-specific compliance schedules shown in table 6 of this subpart.
[b] As an alternative to this schedule, the unit may close by December 19, 2000, complete retrofit while closed, and achieve final compliance upon restarting. See §§62.14108(c), 62.14108(d), and 62.14109(i) of this subpart.
[c] Because final compliance is achieved in 1 year, no increments of progress are required.
[d] Permit issuance is issuance of a revised construction permit or revised operating permit, if a permit modification is required to retrofit controls.
[e] Final compliance must be achieved no later than December 19, 2000, even if the date ''1 year after permit issuance'' exceeds December 19, 2000.

[63 FR 63202, Nov. 12, 1998, as amended at 65 FR 33468, May 24, 2000]

TABLE 6 OF SUBPART FFF TO PART 62—SITE-SPECIFIC COMPLIANCE SCHEDULES AND INCREMENTS OF PROGRESS [A]

Affected facilities at the following MWC sites	City, State	Increment 1 Submit final control plan	Increment 2 Award contracts	Increment 3 Begin on-site construction	Increment 4 Complete on-site construction	Increment 5 Final compliance [c]
Stanislaus Resource Recovery Facility.	Crows Landing, California.	January 11, 1999.	01/19/00	05/19/00	11/19/00	12/19/00
Southeast Resource Recovery Facility.	Long Beach, California.	January 11, 1999.	04/30/99	10/31/99	04/30/00	12/19/00
All large MWC units	Maine	January 11, 1999.	01/01/99	07/01/99	09/01/00	12/19/00
Baltimore Resco	Baltimore, Maryland	January 11, 1999.	January 11, 1999.	January 11, 1999.	09/01/00	12/19/00
All large MWC units	New Jersey [b]	January 11, 1999.	05/18/99	11/14/99	11/19/00	12/19/00
American Ref-Fuel	Delaware County, Pennsylvania.	11/01/98	05/18/99	11/14/99	11/19/00	12/19/00
Montenay Energy Resource.	Montgomery County, Pennsylvania.	11/01/98	05/18/99	11/14/99	11/19/00	12/19/00
I–95 Energy/Resource Recovery Facility.	Lorton, Virginia	January 11, 1999.	10/15/99	03/01/00	11/19/00	12/19/00
New Hanover County, Unit 3A.	Wilmington, North Carolina.	09/15/99	03/01/00	07/01/00	11/19/00	12/19/00

[a] These schedules have been reviewed and determined to be acceptable by EPA.
[b] This schedule applies to HC1 SO_2, PM, Pb, Cd, CO, and NO_X. However, owners and operators of large MWC units in New Jersey have the option of reserving the portion of their control plan that addresses NO_X. Owners and operators must submit the reserved portion to EPA by December 15, 1999.
[c] The owner or operator of an affected facility that began construction, modification, or reconstruction after June 26, 1987 must achieve final compliance with the mercury and dioxins/furans limits within 1 year after promulgation of subpart FFF (i.e., by 11/12/99) or 1 year after permit issuance. Permit issuance is issuance of a revised construction permit or revised operating permit if a permit modification is required to retrofit controls. Final compliance must be achieved no later than December 19, 2000, even if the date ''1 year after permit issuance'' exceeds December 19, 2000.

[63 FR 63202, Nov. 12, 1998; 64 FR 17219, Apr. 8, 1999, as amended at 65 FR 33469, May 24, 2000]

Subpart GGG—Federal Plan Requirements for Municipal Solid Waste Landfills That Commenced Construction Prior to May 30, 1991 and Have Not Been Modified or Reconstructed Since May 30, 1991

SOURCE: 64 FR 60703, Nov. 8, 1999, unless otherwise noted.

§ 62.14350 Scope and delegation of authority.

(a) This subpart contains emission requirements and compliance schedules for the control of designated pollutants from certain municipal solid waste landfills in accordance with section 111(d) of the Clean Air Act and 40 CFR part 60, subpart B. This municipal solid waste landfills Federal plan applies to each designated facility as defined in § 62.14352 of this subpart that is not covered by an EPA approved and currently effective State or Tribal plan.

(b) The following authorities shall be retained by the Administrator and not transferred to the State or Tribe upon delegation of authority to the State or Tribe to implement and enforce the Federal plan pursuant to sections 101(a)(3) and 111 of the Clean Air Act:

(1) Approval of alternative methods to determine site-specific NMOC concentration (C_{NMOC}) or site-specific methane generation rate constant (k) used in calculating the annual NMOC emission rate (as provided in 40 CFR 60.754(a)(5) of subpart WWW),

(2) Alternative emission standards,

(3) Major alternatives[1] to test methods,

(4) Major alternatives to monitoring, or

(5) Waivers of recordkeeping.

§ 62.14351 Definitions.

Terms used but not defined in this subpart have the meaning given them in the Clean Air Act and 40 CFR part 60, subparts A, B, and WWW.

Achieve final compliance means to connect and operate the collection and control system as specified in the final control plan. Within 180 days after the date the landfill is required to achieve final compliance, the initial performance test must be conducted.

Award contract means the MSW landfill owner or operator enters into legally binding agreements or contractual obligations that cannot be canceled or modified without substantial financial loss to the MSW landfill owner or operator. The MSW landfill owner or operator may award a number of contracts to install the collection and control system. To meet this increment of progress, the MSW landfill owner or operator must award a contract or contracts to initiate on-site construction or installation of the collection and control system.

Complete on-site construction means that all necessary collection system components and air pollution control devices identified in the final control plan are on site, in place, and ready for operation.

Design capacity means the maximum amount of solid waste a landfill can accept, as indicated in terms of volume or mass in the most recent permit issued by the State, local, or Tribal agency responsible for regulating the landfill, plus any in-place waste not accounted for in the most recent permit. If the owner or operator chooses to convert the design capacity from volume to mass or from mass to volume to demonstrate its design capacity is less than 2.5 million megagrams or 2.5 million cubic meters, the calculation must include a site-specific density, which must be recalculated annually.

EPA approved State plan means a State plan that EPA has approved based on the requirements in 40 CFR part 60, subpart B to implement and enforce 40 CFR part 60, subpart Cc. An approved State plan becomes effective on the date specified in the notice published in the FEDERAL REGISTER announcing EPA's approval.

Federal Indian Reservation means for purposes of the Clean Air Act, all land within the limits of any Indian reservation under the jurisdiction of the

[1] Major changes to test methods or to monitoring are modifications made to a federally enforceable test method or to a federal monitoring requirement. These changes would involve the use of unproven technology or procedures or an entirely new method (which is sometimes necessary when the required test method or monitoring requirement is unsuitable).

United States government, notwithstanding the issuance of any patent, and including rights-of-way running through the reservation.

Final control plan (Collection and control system design plan) means a plan that describes the collection and control system that will capture the gas generated within an MSW landfill. The collection and control system design plan must be prepared by a professional engineer and must describe a collection and control system that meets the requirements of 40 CFR 60.752(b)(2)(ii). The final control plan must contain engineering specifications and drawings of the collection and control system. The final control plan must include any alternatives to the operational standards, test methods, procedures, compliance measures, monitoring, recordkeeping or reporting provisions of 40 CFR 60.753 through 60.758 proposed by the owner or operator. The final control plan must either conform with the specifications for active collection systems in 40 CFR 60.759 or include a demonstration that shows that based on the size of the landfill and the amount of waste expected to be accepted, the system is sized properly to collect the gas, control emissions of NMOC to the required level and meet the operational standards for a landfill.

Indian Country means all land within the limits of any Indian reservation under the jurisdiction of the United States government, notwithstanding the issuance of any patent, and including rights-of-way running through the reservation; all dependent Indian communities within the borders of the United States whether within the original or subsequently acquired territory thereof, and whether within or without the limits of a State; and all Indian allotments, the Indian titles to which have not been extinguished, including rights-of-way running through the same.

Initiate on-site construction means to begin any of the following: installation of the collection and control system to be used to comply with the emission limits as outlined in the final control plan; physical preparation necessary for the installation of the collection and control system to be used to comply with the final emission limits as outlined in the final control plan; or, alteration of an existing collection and control system to be used to comply with the final emission limits as outlined in the final control plan.

Modification means an increase in the permitted volume design capacity of the landfill by either horizontal or vertical expansion based on its permitted design capacity as of May 30, 1991. Modification does not occur until the owner or operator commences construction on the horizontal or vertical expansion.

Municipal solid waste landfill or *MSW landfill* means an entire disposal facility in a contiguous geographical space where household waste is placed in or on land. A municipal solid waste landfill may also receive other types of RCRA Subtitle D wastes such as commercial solid waste, nonhazardous sludge, conditionally exempt small quantity generator waste, and industrial solid waste. Portions of a municipal solid waste landfill may be separated by access roads. A municipal solid waste landfill may be publicly or privately owned.

Negative declaration letter means a letter to EPA declaring that there are no existing MSW landfills in the State or that there are no existing MSW landfills in the State that must install collection and control systems according to the requirements of 40 CFR part 60, subpart Cc. The negative declaration letter must include the design capacities of any existing MSW landfills with a design capacity less than 2.5 million megagrams or 2.5 million cubic meters.

Protectorate means American Samoa, the Commonwealth of Puerto Rico, the District of Columbia, Guam, the Northern Mariana Islands, and the Virgin Islands.

State means any of the 50 United States and the protectorates of the United States.

State plan means a plan submitted pursuant to section 111(d) of the Clean Air Act and 40 CFR part 60, subpart B that implements and enforces 40 CFR part 60, subpart Cc. State plans include plans developed by States, local agencies, and protectorates.

Tribal plan means a plan submitted by a Tribal Authority pursuant to 40

CFR parts 9, 35, 49, 50, and 81 that implements and enforces 40 CFR part 60, subpart Cc.

§ 62.14352 Designated facilities.

(a) The designated facility to which this subpart applies is each municipal solid waste landfill in all States, protectorates, and Indian Country that meets the conditions of paragraphs (a)(1) and (a)(2) of this section, except for landfills exempted by paragraphs (b) and (c) of this section.

(1) The municipal solid waste landfill commenced construction, reconstruction, or modification before May 30, 1991 (landfills that commence construction, modification, or reconstruction on or after May 30, 1991 are subject to 40 CFR part 60, subpart WWW), and

(2) The municipal solid waste landfill has accepted waste at any time since November 8, 1987 or the landfill has additional capacity for future waste deposition.

(b) A municipal solid waste landfill regulated by an EPA approved and currently effective State or Tribal plan is not subject to the requirements of this subpart. States that have an approved and effective State plan are listed in table 1 of this subpart. Notwithstanding the exclusions in table 1 of this subpart, any MSW landfill located in a State or portion of Indian country that does not have an EPA approved and currently effective State or Tribal plan is subject to the requirements of this subpart.

(c) A municipal solid waste landfill located in a State, locality, or portion of Indian country that submitted a negative declaration letter is not subject to the requirements of this subpart other than the requirements in the definition of design capacity to recalculate the site-specific density annually and in § 62.14355 to submit an amended design capacity report in the event that the recalculated design capacity is equal to or greater than 2.5 million megagrams and 2.5 million cubic meters. However, if the existing municipal solid waste landfill already has a design capacity equal to or greater than 2.5 million megagrams and 2.5 million cubic meters, then it is subject to the requirements of the Federal plan. States, localities, or portions of Indian country that submitted negative declaration letters are listed in table 2 of this subpart.

(d) Physical or operational changes made to an existing municipal solid waste landfill solely to comply with an emission guideline are not considered a modification or reconstruction and would not subject an existing municipal solid waste landfill to the requirements of 40 CFR part 60, subpart WWW.

(e) For purposes of obtaining an operating permit under title V of the Clean Air Act, the owner or operator of a municipal solid waste landfill subject to this subpart with a design capacity less than 2.5 million megagrams or 2.5 million cubic meters is not subject to the requirement to obtain an operating permit for the landfill under part 70 or 71 of this chapter, unless the landfill is otherwise subject to either part 70 or 71. For purposes of submitting a timely application for an operating permit under part 70 or 71, the owner or operator of a municipal solid waste landfill subject to this subpart with a design capacity greater than or equal to 2.5 million megagrams and 2.5 million cubic meters on January 7, 2,000 and not otherwise subject to either part 70 or 71, becomes subject to the requirements of § 70.5(a)(1)(i) or § 71.5(a)(1)(i) of this chapter April 6, 2000, even if the initial design capacity report is submitted earlier. In addition, the owner or operator of a municipal solid waste landfill subject to this subpart with a design capacity less than 2.5 million megagrams or 2.5 million cubic meters on January 7, 2000, and not otherwise subject to either part 70 or 71, but whose design capacity subsequently increases to equal or exceed 2.5 million megagrams and 2.5 million cubic meters by a change that is not a modification or reconstruction becomes subject to the requirements of § 70.5(a)(1)(i) or § 71.5(a)(1)(i) of this chapter upon the date the amended design capacity report is due.

(f) When a municipal solid waste landfill subject to this subpart is closed, the owner or operator is no longer subject to the requirement to maintain an operating permit under part 70 or 71 of this chapter for the landfill if the landfill is not otherwise subject to the requirements of either

part 70 or 71 and if either of the following conditions are met:

(1) The landfill was never subject to the requirement for a control system under §62.14353 of this subpart; or

(2) The owner or operator meets the conditions for control system removal specified in 40 CFR 60.752(b)(2)(v).

§62.14353 Standards for municipal solid waste landfill emissions.

(a) The owner or operator of a designated facility having a design capacity less than 2.5 million megagrams or 2.5 million cubic meters must comply with the requirements of 40 CFR 60.752(a) in addition to the applicable reporting and recordkeeping requirements specified in this subpart.

(b) The owner or operator of a designated facility having a design capacity equal to or greater than 2.5 million megagrams and 2.5 million cubic meters must comply with the requirements of 40 CFR 60.752(b) in addition to the applicable reporting and recordkeeping requirements specified in this subpart.

§62.14354 Procedures, test methods, and monitoring.

(a) The owner or operator of a designated facility having a design capacity equal to or greater than 2.5 million megagrams and 2.5 million cubic meters must calculate the landfill nonmethane organic compounds emission rate using the procedures listed in 40 CFR 60.754, as applicable, to determine whether the landfill nonmethane organic compounds emission rate equals or exceeds 50 megagrams per year.

(b) The owner or operator of a designated facility with a gas collection and control system used to comply with §62.14353(b) must comply with the operational standards in 40 CFR 60.753; the test procedures in 40 CFR 60.754(b) and (d); the compliance provisions in 40 CFR 60.755; and the monitoring provisions in 40 CFR 60.756, unless alternative procedures have been approved.

§62.14355 Reporting and recordkeeping requirements.

(a) The owner or operator of a designated facility must comply with the recordkeeping and reporting provisions listed in 40 CFR 60.757 and 60.758, except as provided for under paragraphs (a)(1) and (a)(2) of this section.

(1) The initial design capacity report for a designated facility is due within 90 days of the effective date of this subpart. Existing MSW landfills with a design capacity less than 2.5 million megagrams or 2.5 million cubic meters that are located in States that submitted a negative declaration letter are not required to submit an initial design capacity report provided that the MSW landfill's design capacity was included in the negative declaration letter.

(2) The initial nonmethane organic compounds emission rate report for a designated facility is due within 90 days of the effective date of this subpart.

(b) The owner or operator of a designated facility must submit notification to the EPA Regional Office within 10 business days of completing each increment of progress. Each notification must indicate which increment of progress specified in §62.14356(a)(1) through (a)(5) of this subpart has been achieved. The notification must be signed by the owner or operator of the landfill.

(1) For the first increment of progress, the final control plan (collection and control system design plan) must be submitted in addition to the notification. A copy of the design plan must also be kept on site at the landfill.

(2) For the second increment of progress, a signed copy of the contract(s) awarded must be submitted in addition to the notification.

(c) The owner or operator of a designated facility who fails to meet any increment of progress specified in §62.14356(a)(1) through (a)(5) of this subpart according to the applicable schedule in §62.14356 of this subpart must submit notification that the owner or operator failed to meet the increment to the EPA Regional Office within 10 business days of the applicable date in §62.14356.

(d) The owner or operator (or the State or Tribal air pollution control authority) that is submitting alternative dates for increments 2 and 3 according to §62.14356(d) of this subpart must do so by the date specified for

submitting the final control plan. The date for submitting the final control plan is specified in § 62.14356(c)(1) and (c)(2) of this subpart, as applicable. The owner or operator (or the State or Tribal air pollution control authority) must submit a justification if any of the alternative dates are later than the increment dates in table 3 of this subpart. In addition to submitting the alternative dates to the appropriate EPA Regional Office, the owner or operator must also submit the alternative dates to the State.

§ 62.14356 Compliance schedules and increments of progress.

(a) *Increments of progress.* The owner or operator of a designated facility that has a design capacity equal to or greater than 2.5 million megagrams and 2.5 million cubic meters and a nonmethane organic compound emission rate greater than or equal to 50 megagrams per year must achieve the increments of progress specified in paragraphs (a)(1) through (a)(5) of this section to install air pollution control devices to meet the emission standards specified in § 62.14353(b) of this subpart. (Refer to § 62.14351 for a definition of each increment of progress.)

(1) Submit control plan: Submit a final control plan (collection and control system design plan) according to the requirements of § 62.14353(b) of this subpart and 40 CFR 60.752(b)(2).

(2) Award contract(s): Award contract(s) to initiate on-site construction or initiate on-site installation of emission collection and/or control equipment.

(3) Initiate on-site construction: Initiate on-site construction or initiate on-site installation of emission collection and/or control equipment as described in the EPA-approved final control plan.

(4) Complete on-site construction: Complete on-site construction and installation of emission collection and/or control equipment.

(5) Achieve final compliance: Complete construction in accordance with the design specified in the EPA-approved final control plan and connect the landfill gas collection system and air pollution control equipment such that they are fully operating. The initial performance test must be conducted within 180 days after the date the facility is required to achieve final compliance.

(b) *Compliance date.* For each designated facility that has a design capacity equal to or greater than 2.5 million megagrams and 2.5 million cubic meters and a nonmethane organic compound emission rate greater than or equal to 50 Mg per year, planning, awarding of contracts, and installation of municipal solid waste landfill air emission collection and control equipment capable of meeting the standards in § 62.14353(b) must be accomplished within 30 months after the date the initial emission rate report (or the annual emission rate report) first shows that the nonmethane organic compounds emission rate equals or exceeds 50 megagrams per year.

(c) *Compliance schedules.* The owner or operator of a designated facility that has a design capacity equal to or greater than 2.5 million megagrams and 2.5 million cubic meters and a nonmethane organic compound emission rate greater than or equal to 50 megagrams per year must achieve the increments of progress specified in paragraphs (a)(1) through (a)(5) of this section according to the schedule specified in paragraph (c)(1) or (c)(2) of this section, unless a site-specific schedule is approved by EPA.

(1) The owner or operator of a designated facility must achieve the increments of progress according to the schedule in table 3 of this subpart, except for those affected facilities specified in paragraph (c)(2) of this section. Once this subpart becomes effective on January 7, 2000, any designated facility to which this subpart applies will remain subject to the schedule in table 3 if a subsequently approved State or Tribal plan contains a less stringent schedule, (*i.e.*, a schedule that provides more time to comply with increments 1, 4 and/or 5 than does this Federal plan).

(2) The owner or operator of the specified designated facility in table 4 of this subpart must achieve the increments of progress according to the schedule in table 4 of this subpart.

(d) For designated facilities that are subject to the schedule requirements of

paragraph (c)(1) of this section, the owner or operator (or the State or Tribal air pollution control authority) may submit to the appropriate EPA Regional Office for approval alternative dates for achieving increments 2 and 3.

TABLE 1 OF SUBPART GGG TO PART 62—STATES THAT HAVE AN APPROVED AND EFFECTIVE STATE PLAN [A]

State plan	Effective date of state plan [b]
Alabama	12/07/98
Allegheny County, Pennsylvania	04/16/99
Arizona	11/19/99
California	11/22/99
Colorado	09/28/98
Delaware	11/16/99
Florida	08/03/99
Georgia	01/12/99
Illinois	01/22/99
Iowa	06/22/98
Kansas	05/19/98
Kentucky	06/21/99
Louisiana	10/28/97
Maryland	11/8/99
Minnesota	09/25/98
Missouri	06/23/98
Montana	09/08/98
Nashville, Tennessee	02/16/99
Nebraska	06/23/98
Nevada	11/19/99
New Mexico	02/10/98
New York	09/17/99
North Dakota	02/13/98
Ohio	10/06/98
Oklahoma	05/18/99
Oregon	08/25/98
South Carolina	10/25/99
South Dakota	08/02/99
Tennessee	11/29/99
Texas	08/16/99
Utah	03/16/98
Wyoming	07/31/98

[a] This table is provided as a matter of convenience and is not controlling in determining whether a MSW landfill is subject to the Federal plan. A MSW landfill is subject to this Federal plan if it commenced construction before May 30, 1991 and has not been modified or reconstructed on or after that date and is not covered by an approved and currently effective State or Tribal plan.

[b] The State plan is expected to become effective on the date indicated. However, if the State plan does not become effective on the date indicated, the Federal plan applies until the State plan becomes effective.

TABLE 2 OF SUBPART GGG TO PART 62—STATES THAT SUBMITTED A NEGATIVE DECLARATION LETTER [a]

State, locality, or portion of Indian country	Date of negative declaration
District of Columbia	09/11/97
New Hampshire	07/22/98
Philadelphia, Pennsylvania	02/27/96
Rhode Island	05/27/98
Vermont	08/20/96

[a] A MSW landfill with a design capacity equal to or greater than 2.5 million megagrams and 2.5 million cubic meters located in an area for which a negative declaration letter was submitted is subject to the Federal plan, notwithstanding the negative declaration letter and this table 2.

TABLE 3 OF SUBPART GGG TO PART 62—GENERIC COMPLIANCE SCHEDULE AND INCREMENTS OF PROGRESS [A]

Increment	Date
Increment 1—Submit final control plan	1 year after initial NMOC emission rate report or the first annual emission rate report showing NMOC emissions ≥ 50 Mg/yr.[b]
Increment 2—Award Contracts	20 months after initial NMOC emission rate report or the first annual emission rate report showing NMOC emissions ≥ 50 Mg/yr.[b]
Increment 3—Begin on-site construction	24 months after initial NMOC emission rate report or the first annual emission rate report showing NMOC emissions ≥ 50 Mg/yr.[b]
Increment 4—Complete on-site construction	30 months after initial NMOC emission rate report or the first annual emission rate report showing NMOC emissions ≥ 50 Mg/yr.[b]
Increment 5—Final compliance	30 months after initial NMOC emission rate report or the first annual emission rate report showing NMOC emissions ≥ 50 Mg/yr.[b]

[a] Table 3 of subpart GGG applies to landfills with design capacities ≥2.5 million megagrams and 2.5 million cubic meters that are subject to this subpart except those with site-specific compliance schedules shown in table 4 of subpart GGG.

[b] NMOC = nonmethane organic compounds Mg/yr = megagrams per year

TABLE 4 OF SUBPART GGG—SITE-SPECIFIC COMPLIANCE SCHEDULES AND INCREMENTS OF PROGRESS [RESERVED]

Subpart HHH—Federal Plan Requirements for Hospital/Medical/Infectious Waste Incinerators Constructed on or Before June 20, 1996

SOURCE: 65 FR 49881, Aug. 15, 2000, unless otherwise noted.

APPLICABILITY

§ 62.14400 Am I subject to this subpart?

(a) You are subject to this subpart if paragraphs (a)(1), (2), and (3) of this section are all true:

(1) You own or operate an HMIWI that is not covered by an EPA approved and effective State or Tribal plan;

(2) Construction of the HMIWI commenced on or before June 20, 1996; and

(3) You do not meet any of the exemptions in paragraph (b) of this section.

(b) The following exemptions apply:

If you . . .	And you . . .	And you . . .	Then you . . .
(1) Own or operate an HMIWI that combusts only pathological waste, low-level radioactive waste, and/or chemothera-peutic waste (all defined in 40 CFR 62.14490).	Notify the EPA Administrator (or delegated enforcement authority) of an exemption claim.	Keep records on a calendar quarter basis of the periods of time when only pathological waste, low-level radio active waste, and/or chemo therapeutic waste is combusted, and you submit such records to the EPA Administrator (or delegated enforcement authority) upon request,.	Are not subject to the other sections of this subpart during periods when only pathological, low-level radioactive, and/or chemotherapeutic wastes are combusted.
(2) Own or operate a co-fired combustor (defined in 40 CFR 62.14490).	Notify the EPA Administrator (or delegated enforcement authority) of an exemption claim and you provide an estimate of the relative weight of hospital waste, medical/infectious waste, and other fuels and/or wastes to be combusted.	Keep records on a calendar quarter basis of the weight of hospital waste and medical/infectious waste combusted as well as the weight of all other fuels and wastes combusted at the co-fired combustor, and these records reflect that the source continues to meet the definition of co-fired combustor in 40 CFR 62.14490, and you submit such records to the EPA Administrator (or delegated enforcement authority) upon request.	Are not subject to the other sections of this subpart.
(3) Own or operate a combustor that must have a permit under Section 3005 of the Solid Waste Disposal Act.	.....	.....	Are not subject to this subpart.
(4) Own or operate a combustor which meets the applicability requirements of 40 CFR part 60 subpart Cb, Ea, or Eb (standards or guidelines for certain municipal waste combustors).	.....	.....	Are not subject to this subpart.
(5) Own or operate a pyrolysis unit (defined in 40 CFR 62.14490) processing hospital waste and/or medical/infectious waste.	.....	.....	Are not subject to this subpart.
(6) Own or operate a cement kiln firing hospital waste and/or medical/infectious waste.	.....	.....	Are not subject to this subpart.

(c) Owners or operators of sources that qualify for the exemptions in paragraphs (b)(1) or (b)(2) of this section must submit records required to support their claims of exemption to the EPA Administrator (or delegated enforcement authority) upon request. Upon request by any person under the regulation at part 2 of this chapter (or a comparable law or regulation governing a delegated enforcement authority), the EPA Administrator (or delegated enforcement authority) must request the records in (b)(1) or (b)(2) from an owner or operator and make such records available to the requestor to the extent required by part 2 of this chapter (or a comparable law governing a delegated enforcement authority). Records required under paragraphs (b)(1) and (b)(2) of this section must be maintained by the source for a period of at least 5 years. Notifications of exemption claims required under paragraphs (b)(1) and (b)(2) of this section must be maintained by the EPA or delegated enforcement authority for a period of at least 5 years. Any information obtained from an owner or operator of a source accompanied by a claim of confidentiality will be treated in accordance with the regulations in part 2 of this chapter (or a comparable law governing a delegated enforcement authority).

§62.14401 How do I determine if my HMIWI is covered by an approved and effective State or Tribal plan?

This part (40 CFR part 62) contains a list of all States and Tribal areas with approved Clean Air Act section 111(d)/129 plans in effect. However, this part is only updated once a year. Thus, if this part does not indicate that your State or Tribal area has an approved and effective plan, you should contact your State environmental agency's air director or your EPA Regional Office to determine if approval occurred since publication of the most recent version of this part.

§62.14402 If my HMIWI is not listed on the Federal plan inventory, am I exempt from this subpart?

Not necessarily. Sources subject to this subpart include, but are not limited to, the inventory of sources listed in Docket A–98–24 for the Federal plan.

§62.14403 What happens if I modify an existing HMIWI?

(a) If you commenced modification (defined in 40 CFR 62.14490) of an existing HMIWI after March 16, 1998, you are subject to 40 CFR part 60, subpart Ec (40 CFR 60.50c through 60.58c) and you are not subject to this subpart, except as provided in paragraph (b) of this section.

(b) If you made physical or operational changes to your existing HMIWI solely for the purpose of complying with this subpart, these changes are not considered a modification, and you are not subject to 40 CFR part 60, subpart Ec (40 CFR 60.50c through 60.58c). You remain subject to this subpart.

EMISSION LIMITS

§62.14410 Are there different emission limits for different locations and sizes of HMIWI?

Yes, there are different emission limits for small rural, small, medium, and large HMIWI. To determine the size category of your HMIWI, consult the definitions in 40 CFR 62.14490.

§62.14411 What emission limits apply to my HMIWI?

You must operate your HMIWI in compliance with the emission limit requirements for your HMIWI size category listed in table 1 of this subpart.

§62.14412 What stack opacity requirements apply?

Your HMIWI (regardless of size category) must not discharge into the atmosphere from the stack any gases that exhibit greater than 10 percent opacity (6-minute block average).

§62.14413 When do the emission limits and stack opacity requirements apply?

The emission limits and stack opacity requirements of this subpart apply at all times except during periods of startup, shutdown, or malfunction, provided that no hospital waste or medical/infectious waste is charged to your HMIWI during periods of startup, shutdown, or malfunction.

OPERATOR TRAINING AND QUALIFICATION

§ 62.14420 Am I required to have a trained and qualified operator?

You must have a fully trained and qualified HMIWI operator, either at your facility or able to be at your facility within 1 hour. The trained and qualified HMIWI operator may operate the HMIWI directly or be the direct supervisor of one or more HMIWI operators.

§ 62.14421 How does an operator become trained and qualified?

(a) The HMIWI operator can obtain training and qualification through a State-approved program or as provided in paragraph (b) of this section.

(b) If there are no State-approved training and qualification programs available or if your operator does not want to participate in a State-approved program, then your operator must complete a training course that includes the requirements in § 62.14422 and satisfy the qualification requirements in § 62.14423.

§ 62.14422 What are the requirements for a training course that is not part of a State-approved program?

A training course must include:

(a) Twenty-four hours of training that includes all of the following subjects:

(1) Environmental concerns, including pathogen destruction and types of emissions;

(2) Basic combustion principles, including products of combustion;

(3) Operation of the type of incinerator to be used by the operator, including proper startup, waste charging, and shutdown procedures;

(4) Combustion controls and monitoring;

(5) Operation of air pollution control equipment and factors affecting performance (if applicable);

(6) Methods to monitor pollutants (continuous emission monitoring systems and monitoring of HMIWI and air pollution control device operating parameters) and equipment calibration procedures (where applicable);

(7) Inspection and maintenance of the HMIWI, air pollution control devices, and continuous emission monitoring systems;

(8) Actions to correct malfunctions and conditions that may lead to malfunction;

(9) Bottom and fly ash characteristics and handling procedures;

(10) Applicable Federal, State, and local regulations;

(11) Work safety procedures;

(12) Prestartup inspections; and

(13) Recordkeeping requirements.

(b) An examination designed and administered by the instructor; and

(c) Reference material distributed to the attendees covering the course topics.

§ 62.14423 What are the qualification requirements for operators who do not participate in a State-approved program?

(a) Operators who do not participate in a State-approved program must satisfy paragraphs (a)(1) and (2) of this section:

(1) The operator must complete a training course that satisfies the requirements in § 62.14422; and

(2) The operator must have either 6 months experience as an HMIWI operator, 6 months experience as a direct supervisor of an HMIWI operator, or completion of at least two burn cycles under the observation and supervision of two qualified HMIWI operators.

(b) The operator's qualification is valid after paragraphs (a)(1) and (2) of this section are completed.

(c) To remain qualified, the operator must complete and pass an annual review or refresher course of at least 4 hours covering, at a minimum, the following:

(1) Update of regulations;

(2) Incinerator operation, including startup and shutdown procedures;

(3) Inspection and maintenance;

(4) Responses to malfunctions or conditions that may lead to malfunction; and

(5) Discussion of operating problems encountered by attendees.

(d) If the operator's qualification lapses, he or she must renew it by one of the following methods:

(1) For a lapse of less than 3 years, complete and pass a standard annual refresher course described in paragraph (c) of this section;

(2) For a lapse of 3 years or more, complete and pass a training course with the minimum criteria described in §62.14422.

§62.14424 What documentation must I maintain onsite?

(a) You must maintain the following at the facility:

(1) Summary of the applicable standards under this subpart;

(2) Description of basic combustion theory applicable to an HMIWI;

(3) Procedures for receiving, handling, and charging waste;

(4) Procedures for startup, shutdown, and malfunction;

(5) Procedures for maintaining proper combustion air supply levels;

(6) Procedures for operating the HMIWI and associated air pollution control systems within the standards established under this subpart;

(7) Procedures for responding to malfunction or conditions that may lead to malfunction;

(8) Procedures for monitoring HMIWI emissions;

(9) Reporting and recordkeeping procedures; and

(10) Procedures for handling ash.

(b) You must keep the information listed in paragraph (a) of this section in a readily accessible location for all HMIWI operators. This information, along with records of training, must be available for inspection by the EPA or its delegated enforcement agent upon request.

§62.14425 When must I review the documentation?

(a) You must establish a program for reviewing the information listed in §62.14424 annually with each HMIWI operator (defined in §62.14490).

(b) You must conduct your initial review of the information listed in §62.14424 by February 15, 2001, or prior to assumption of responsibilities affecting HMIWI operation, whichever is later.

(c) You must conduct subsequent reviews of the information listed in §62.14424 annually.

WASTE MANAGEMENT PLAN

§62.14430 Must I prepare a waste management plan?

Yes. All HMIWI owners or operators must have a waste management plan.

§62.14431 What must my waste management plan include?

Your waste management plan must identify both the feasibility of, and the approach for, separating certain components of solid waste from the health care waste stream in order to reduce the amount of toxic emissions from incinerated waste. The waste management plan you develop may address, but is not limited to, paper, cardboard, plastics, glass, battery, or metal recycling, or purchasing recycled or recyclable products. Your waste management plan may include different goals or approaches for different areas or departments of the facility and need not include new waste management goals for every waste stream. When you develop your waste management plan it should identify, where possible, reasonably available additional waste management measures, taking into account the effectiveness of waste management measures already in place, the costs of additional measures, the emission reductions expected to be achieved, and any other potential environmental or energy impacts they might have. In developing your waste management plan, you must consider the American Hospital Association publication entitled ''Ounce of Prevention: Waste Reduction Strategies for Health Care Facilities.'' This publication (AHA Catalog No. 057007) is available for purchase from the American Hospital Association (AHA) Service, Inc., Post Office Box 92683, Chicago, Illinois 60675–2683.

§62.14432 When must my waste management plan be completed?

As specified in §§62.14463 and 62.14464, you must submit your waste management plan with your initial report, which is due 60 days after your initial performance test.

INSPECTION REQUIREMENTS

§ 62.14440 Which HMIWI are subject to inspection requirements?

Only small rural HMIWI (defined in § 62.14490) are subject to inspection requirements.

§ 62.14441 When must I inspect my small rural HMIWI?

(a) You must inspect your small rural HMIWI by August 15, 2001.

(b) You must conduct inspections as outlined in § 62.14442 annually (no more than 12 months following the previous annual equipment inspection).

§ 62.14442 What must my inspection include?

At a minimum, you must do the following during your inspection:

(a) Inspect all burners, pilot assemblies, and pilot sensing devices for proper operation, and clean pilot flame sensor as necessary;

(b) Check for proper adjustment of primary and secondary chamber combustion air, and adjust as necessary;

(c) Inspect hinges and door latches, and lubricate as necessary;

(d) Inspect dampers, fans, and blowers for proper operation;

(e) Inspect HMIWI door and door gaskets for proper sealing;

(f) Inspect motors for proper operation;

(g) Inspect primary chamber refractory lining, and clean and repair/replace lining as necessary;

(h) Inspect incinerator shell for corrosion and/or hot spots;

(i) Inspect secondary/tertiary chamber and stack, and clean as necessary;

(j) Inspect mechanical loader, including limit switches, for proper operation, if applicable;

(k) Visually inspect waste bed (grates), and repair/ seal, as necessary;

(l) For the burn cycle that follows the inspection, document that the incinerator is operating properly and make any necessary adjustments;

(m) Inspect air pollution control device(s) for proper operation, if applicable;

(n) Inspect waste heat boiler systems to ensure proper operation, if applicable;

(o) Inspect bypass stack components;

(p) Ensure proper calibration of thermocouples, sorbent feed systems and any other monitoring equipment; and

(q) Generally observe that the equipment is maintained in good operating condition.

§ 62.14443 When must I do repairs?

You must complete any necessary repairs within 10 operating days of the inspection unless you obtain written approval from the EPA Administrator (or delegated enforcement authority) establishing a different date when all necessary repairs of your HMIWI must be completed.

PERFORMANCE TESTING AND MONITORING REQUIREMENTS

§ 62.14450 What are the testing requirements for small rural HMIWI?

(a) If you operate a small rural HMIWI (defined in § 62.14490), you must conduct an initial performance test for PM, opacity, CO, dioxin/furan, and Hg using the test methods and procedures outlined in § 62.14452.

(b) After the initial performance test is completed or is required to be completed under § 62.14470, whichever date comes first, if you operate a small rural HMIWI you must determine compliance with the opacity limit by conducting an annual performance test (no more than 12 months following the previous performance test) using the applicable procedures and test methods listed in § 62.14452.

(c) The 2,000 lb/wk limitation for small rural HMIWI does not apply during performance tests.

(d) The EPA Administrator may request a repeat performance test at any time.

§ 62.14451 What are the testing requirements for HMIWI that are not small rural?

(a) If you operate an HMIWI that is not a small rural HMIWI, you must conduct an initial performance test for PM, opacity, CO, dioxin/furan, HCl, Pb, Cd, and Hg using the test methods and procedures outlined in § 62.14452.

(b) After the initial performance test is completed or is required to be completed under §62.14470, whichever date comes first, you must:

(1) Determine compliance with the opacity limit by conducting an annual performance test (no more than 12 months following the previous performance test) using the applicable procedures and test methods listed in §62.14452.

(2) Determine compliance with the PM, CO, and HCl emission limits by conducting an annual performance test (no more than 12 months following the previous performance test) using the applicable procedures and test methods listed in §62.14452. If all three performance tests over a 3-year period indicate compliance with the emission limit for a pollutant (PM, CO, or HCl), you may forego a performance test for that pollutant for the next 2 years. At a minimum, you must conduct a performance test for PM, CO, and HCl every third year (no more than 36 months following the previous performance test). If a performance test conducted every third year indicates compliance with the emission limit for a pollutant (PM, CO, or HCl), you may forego a performance test for that pollutant for an additional 2 years. If any performance test indicates noncompliance with the respective emission limit, you must conduct a performance test for that pollutant annually until all annual performance tests over a 3-year period indicate compliance with the emission limit.

(c) The EPA Administrator may request a repeat performance test at any time.

§62.14452 What test methods and procedures must I use?

You must use the following test methods and procedures to conduct performance tests to determine compliance with the emission limits:

(a) All performance tests must consist of a minimum of three test runs conducted under representative operating conditions;

(b) The minimum sample time must be 1 hour per test run unless otherwise indicated in this section;

(c) You must use EPA Reference Method 1 of 40 CFR part 60, appendix A to select the sampling location and number of traverse points;

(d) You must use EPA Reference Method 3, 3A, or 3B of 40 CFR part 60, appendix A for gas composition analysis, including measurement of oxygen concentration. You must use EPA Reference Method 3, 3A, or 3B of 40 CFR part 60, appendix A simultaneously with each reference method;

(e) You must adjust pollutant concentrations to 7 percent oxygen using the following equation:

$$C_{adj} = C_{meas}\,(20.9 - 7)/(20.9 - \%O_2) \qquad \text{(Eq. 1)}$$

Where:

C_{adj} = pollutant concentration adjusted to 7 percent oxygen;

C_{meas} = pollutant concentration measured on a dry basis at standard conditions

(20.9–7) = 20.9 percent oxygen—7 percent oxygen (defined oxygen correction basis);

20.9 = oxygen concentration in air, percent; and

$\%O_2$ = oxygen concentration measured on a dry basis at standard conditions, percent.

(f) Except as provided in paragraph (l) of this section, you must use EPA Reference Method 5 or 29 of 40 CFR part 60, appendix A to measure particulate matter emissions;

(g) Except as provided in paragraph (l) of this section, you must use EPA Reference Method 9 of 40 CFR part 60, appendix A to measure stack opacity;

(h) Except as provided in paragraph (l) of this section, you must use EPA Reference Method 10 or 10B of 40 CFR part 60, appendix A to measure the CO emissions;

(i) Except as provided in paragraph (l) of this section, you must use EPA Reference Method 23 of 40 CFR part 60, appendix A to measure total dioxin/furan emissions. The minimum sample time must be 4 hours per test run. If you have selected the toxic equivalency standards for dioxin/furans under §62.14411, you must use the following procedures to determine compliance:

(1) Measure the concentration of each dioxin/furan tetra-through octa-congener emitted using EPA Reference Method 23;

(2) For each dioxin/furan congener measured in accordance with paragraph (i)(1) of this section, multiply the congener concentration by its corresponding toxic equivalency factor specified in Table 2 of this subpart;

(3) Sum the products calculated in accordance with paragraph (i)(2) of this section to obtain the total concentration of dioxins/furans emitted in terms of toxic equivalency.

(j) Except as provided in paragraph (l) of this section, you must use EPA Reference Method 26 of 40 CFR part 60, appendix A to measure HCl emissions. If you have selected the percentage reduction standards for HCl under §62.14411, compute the percentage reduction in HCl emissions ($\%R_{HCl}$) using the following formula:

$$\left(\%R_{HCl}\right) = \left(\frac{E_i - E_o}{E_i}\right) \times 100 \qquad \text{(Eq. 2)}$$

Where:

$\%R_{HCl}$ = percentage reduction of HCl emissions achieved;

E_i = HCl emission concentration measured at the control device inlet, corrected to 7 percent oxygen (dry basis at standard conditions); and

E_o = HCl emission concentration measured at the control device outlet, corrected to 7 percent oxygen (dry basis at standard conditions).

(k) Except as provided in paragraph (l) of this section, you must use EPA Reference Method 29 of 40 CFR part 60, appendix A to measure Pb, Cd, and Hg emissions. If you have selected the percentage reduction standards for metals under §62.14411, compute the percentage reduction in emissions ($\%R_{metal}$) using the following formula:

$$\left(\%R_{metal}\right) = \left(\frac{E_i - E_o}{E_i}\right) \times 100 \qquad \text{(Eq. 3)}$$

Where:

$\%R_{metal}$ = percentage reduction of metal emission (Pb, Cd, or Hg) achieved;

E_i = metal emission concentration (Pb, Cd, or Hg) measured at the control device inlet, corrected to 7 percent oxygen (dry basis at standard conditions); and

E_o = metal emission concentration (Pb, Cd, or Hg) measured at the control device outlet, corrected to 7 percent oxygen (dry basis at standard conditions).

(l) If you are using a continuous emission monitoring system (CEMS) to demonstrate compliance with any of the emission limits under §§62.14411 or 62.14412, you must:

(1) Determine compliance with the appropriate emission limit(s) using a 12-hour rolling average, calculated each hour as the average of the previous 12 operating hours (not including startup, shutdown, or malfunction). Performance tests using EPA Reference Methods are not required for pollutants monitored with CEMS.

(2) Operate a CEMS to measure oxygen concentration, adjusting pollutant concentrations to 7 percent oxygen as specified in paragraph (e) of this section.

(3) Operate all CEMS in accordance with the applicable procedures under appendices B and F of 40 CFR part 60.

(m) Use of the bypass stack during a performance test will invalidate the performance test.

§ 62.14453 What must I monitor?

(a) If your HMIWI is a small rural HMIWI, or your HMIWI is equipped with a dry scrubber followed by a fabric filter, a wet scrubber, or a dry

scrubber followed by a fabric filter and wet scrubber:

(1) You must establish the appropriate maximum and minimum operating parameters, indicated in Table 3, as site-specific operating parameters during the initial performance test to determine compliance with the emission limits; and

(2) After the date on which the initial performance test is completed or is required to be completed under §62.14470, whichever comes first, your HMIWI must not operate above any of the applicable maximum operating parameters or below any of the applicable minimum operating parameters listed in Table 3 and measured as 3-hour rolling averages (calculated each hour as the average of the previous 3 operating hours), at all times except during startup, shutdown, malfunction, and performance tests.

(b) If your HMIWI is not a small rural HMIWI, and you are using an air pollution control device other than a dry scrubber followed by a fabric filter, a wet scrubber, or a dry scrubber followed by a fabric filter and a wet scrubber to comply with the emission limits under §62.14411, you must petition the EPA Administrator for site-specific operating parameters to be established during the initial performance test and you must continuously monitor those parameters thereafter. You may not conduct the initial performance test until the EPA Administrator has approved the petition.

§62.14454 How must I monitor the required parameters?

(a) You must install, calibrate (to manufacturers' specifications), maintain, and operate devices (or establish methods) for monitoring the applicable maximum and minimum operating parameters listed in Table 3 of this subpart such that these devices (or methods) measure and record values for the operating parameters at the frequencies indicated in Table 3 of this subpart at all times except during periods of startup and shutdown. For charge rate, the device must measure and record the date, time, and weight of each charge fed to the HMIWI. This must be done automatically, meaning that the only intervention from an operator during the process would be to load the charge onto the weighing device. For batch HMIWI, the maximum charge rate is measured on a daily basis (the amount of waste charged to the unit each day).

(b) For all HMIWI except small rural HMIWI, you must install, calibrate (to manufacturers' specifications), maintain, and operate a device or method for measuring the use of the bypass stack, including the date, time, and duration of such use.

(c) For all HMIWI except small rural HMIWI, if you are using controls other than a dry scrubber followed by a fabric filter, a wet scrubber, or a dry scrubber followed by a fabric filter and a wet scrubber to comply with the emission limits under §62.14411, you must install, calibrate (to manufacturers' specifications), maintain, and operate the equipment necessary to monitor the site-specific operating parameters developed pursuant to §62.14453(b).

(d) You must obtain monitoring data at all times during HMIWI operation except during periods of monitoring equipment malfunction, calibration, or repair. At a minimum, valid monitoring data must be obtained for 75 percent of the operating hours per day for 90 percent of the operating days per calendar quarter that your HMIWI is combusting hospital waste and/or medical/infectious waste.

§62.14455 What if my HMIWI goes outside of a parameter limit?

(a) Operation above the established maximum or below the established minimum operating parameter(s) constitutes a violation of established operating parameter(s). Operating parameter limits do not apply during startup, shutdown, malfunction, and performance tests.

(b) Except as provided in paragraph (f) or (g) of this section, if your HMIWI is a small rural HMIWI,

And your HMIWI . . .	Then you are in violation of . . .
Operates above the maximum charge rate (3-hour rolling average for continuous and intermittent HMIWI, daily average for batch HMIWI) and below the minimum secondary chamber temperature (3-hour rolling average) simultaneously.	The PM, CO, and dioxin/furan emission limits.

(c) Except as provided in paragraph (f) or (g) of this section, if your HMIWI is equipped with a dry scrubber followed by a fabric filter:

And your HMIWI . . .	Then you are in violation of . . .
(1) Operates above the maximum charge rate (3-hour rolling average for continuous and intermittent HMIWI, daily average for batch HMIWI) and below the minimum secondary chamber temperature (3-hour rolling average) simultaneously.	The CO emission limit.
(2) Operates above the maximum fabric filter inlet temperature (3-hour rolling average), above the maximum charge rate (3-hour rolling average for continuous and intermittent HMIWI, daily average for batch HMIWI), and below the minimum dioxin/furan sorbent flow rate (3-hour rolling average) simultaneously.	The dioxin/furan emission limit.
(3) Operates above the maximum charge rate (3-hour rolling average for continuous and intermittent HMIWI, daily average for batch HMIWI) and below the minimum HCl sorbent flow rate (3-hour rolling average) simultaneously.	The HCl emission limit.
(4) Operates above the maximum charge rate (3-hour rolling average for continuous and intermittent HMIWI, daily average for batch HMIWI) and below the minimum Hg sorbent flow rate (3-hour rolling average) simultaneously.	The Hg emission limit.
(5) Uses the bypass stack (except during startup, shutdown, or malfunction)	The PM, dioxin/furan, HCl, Pb, Cd, and Hg emission limits.

(d) Except as provided in paragraph (f) or (g) of this section, if your HMIWI is equipped with a wet scrubber:

And your HMIWI . . .	Then you are in violation of . . .
(1) Operates above the maximum charge rate (3-hour rolling average for continuous and intermittent HMIWI, daily average for batch HMIWI) and below the minimum secondary chamber temperature (3-hour rolling average) simultaneously.	The CO emission limit.
(2) Operates above the maximum charge rate (3-hour rolling average for continuous and intermittent HMIWI, daily average for batch HMIWI) and below the minimum pressure drop across the wet scrubber (3-hour rolling average) or below the minimum horsepower or amperage to the system (3-hour rolling average) simultaneously.	The PM emission limit.
(3) Operates above the maximum charge rate (3-hour rolling average for continuous and intermittent HMIWI, daily average for batch HMIWI), below the minimum secondary chamber temperature (3-hour rolling average), and below the minimum scrubber liquor flow rate (3-hour rolling average) simultaneously.	The dioxin/furan emission limit.
(4) Operates above the maximum charge rate (3-hour rolling average for continuous and intermittent HMIWI, daily average for batch HMIWI) and below the minimum scrubber liquor pH (3-hour rolling average) simultaneously.	The HCl emission limit.
(5) Operates above the maximum flue gas temperature (3-hour rolling average) and above the maximum charge rate (3-hour rolling average for continuous and intermittent HMIWI, daily average for batch HMIWI) simultaneously.	The Hg emission limit.
(6) Uses the bypass stack (except during startup, shutdown, or malfunction)	The PM, dioxin/furan, HCl, Pb, Cd, and Hg emission limits.

(e) Except as provided in paragraph (f) or (g) of this section, if your HMIWI is equipped with a dry scrubber followed by a fabric filter and a wet scrubber:

And your HMIWI . . .	Then you are in violation of . . .
(1) Operates above the maximum charge rate (3-hour rolling average for continuous and intermittent HMIWI, daily average for batch HMIWI) and below the minimum secondary chamber temperature (3-hour rolling average) simultaneously.	The CO emission limit.

And your HMIWI . . .	Then you are in violation of . . .
(2) Operates above the maximum fabric filter inlet temperature (3-hour rolling average), above the maximum charge rate (3-hour rolling average for continuous and intermittent HMIWI, daily average for batch HMIWI), and below the minimum dioxin/furan sorbent flow rate (3-hour rolling average) simultaneously.	The dioxin/furan emission limit.
(3) Operates above the maximum charge rate (3-hour rolling average for continuous and intermittent HMIWI, daily average for batch HMIWI) and below the minimum scrubber liquor pH (3-hour rolling average) simultaneously.	The HCl emission limit.
(4) Operates above the maximum charge rate (3-hour rolling average for continuous and intermittent HMIWI, daily average for batch HMIWI) and below the minimum Hg sorbent flow rate (3-hour rolling average) simultaneously.	The Hg emission limit.
(5) Uses the bypass stack (except during startup, shutdown, or malfunction)	The PM, dioxin/furan, HCl, Pb, Cd, and Hg emission limits.

(f) You may conduct a repeat performance test within 30 days of violation of applicable operating parameter(s) to demonstrate that your HMIWI is not in violation of the applicable emission limit(s). You must conduct repeat performance tests pursuant to this paragraph using the identical operating parameters that indicated a violation under paragraph (b), (c), (d) or (e) of this section.

(g) If you are using a CEMS to demonstrate compliance with any of the emission limits in table 1 of this subpart or §62.14412, and your CEMS indicates compliance with an emission limit during periods when operating parameters indicate a violation of an emission limit under paragraphs (b), (c), (d), or (e) of this section, then you are considered to be in compliance with the emission limit. You need not conduct a repeat performance test to demonstrate compliance.

(h) You may conduct a repeat performance test in accordance with §62.14452 at any time to establish new values for the operating parameters.

REPORTING AND RECORDKEEPING REQUIREMENTS

§62.14460 What records must I maintain?

You must maintain the following:

(a) Calendar date of each record;

(b) Records of the following data:

(1) Concentrations of any pollutant listed in table 1 and/or measurements of opacity;

(2) The HMIWI charge dates, times, and weights and hourly charge rates;

(3) Fabric filter inlet temperatures during each minute of operation, as applicable;

(4) Amount and type of dioxin/furan sorbent used during each hour of operation, as applicable;

(5) Amount and type of Hg sorbent used during each hour of operation, as applicable;

(6) Amount and type of HCl sorbent used during each hour of operation, as applicable;

(7) Secondary chamber temperatures recorded during each minute of operation;

(8) Liquor flow rate to the wet scrubber inlet during each minute of operation, as applicable,

(9) Horsepower or amperage to the wet scrubber during each minute of operation, as applicable;

(10) Pressure drop across the wet scrubber system during each minute of operation, as applicable;

(11) Temperature at the outlet from the wet scrubber during each minute of operation, as applicable;

(12) The pH at the inlet to the wet scrubber during each minute of operation, as applicable;

(13) Records of the annual equipment inspections, any required maintenance, and any repairs not completed within 10 operating days of an inspection or the time frame established by the EPA Administrator or delegated enforcement authority, as applicable;

(14) Records indicating use of the bypass stack, including dates, times, and durations; and

(15) If you are complying by monitoring site-specific operating parameters under §62.14453(b), you must monitor all operating data collected.

(c) Identification of calendar days for which data on emission rates or operating parameters specified under paragraph (b)(1) through (15) of this section

were not obtained, with an identification of the emission rates or operating parameters not measured, reasons for not obtaining the data, and a description of corrective actions taken;

(d) Identification of calendar days, times and durations of malfunctions, and a description of the malfunction and the corrective action taken.

(e) Identification of calendar days for which data on emission rates or operating parameters specified under paragraphs (b)(1) through (15) of this section exceeded the applicable limits, with a description of the exceedances, reasons for such exceedances, and a description of corrective actions taken.

(f) The results of the initial, annual, and any subsequent performance tests conducted to determine compliance with the emission limits and/or to establish operating parameters, as applicable.

(g) Records showing the names of HMIWI operators who have completed review of the documentation in § 62.14424 as required by § 62.14425, including the date of the initial review and all subsequent annual reviews;

(h) Records showing the names of the HMIWI operators who have completed the operator training requirements, including documentation of training and the dates of the training;

(i) Records showing the names of the HMIWI operators who have met the criteria for qualification under § 62.14423 and the dates of their qualification; and

(j) Records of calibration of any monitoring devices as required under § 62.14454.

§ 62.14461 For how long must I maintain records?

You must maintain the records specified under § 62.14460 for a period of at least 5 years.

§ 62.14462 Where must I keep the records?

You must maintain all records specified under § 62.14460 onsite in either paper copy or computer-readable format, unless an alternative format is approved by the EPA Administrator.

§ 62.14463 What reporting requirements must I satisfy?

You must report the following to the EPA Administrator (or delegated enforcement authority):

(a) The initial performance test data as recorded under § 62.14450(a) or § 62.14451(a) (whichever applies);

(b) The values for the site-specific operating parameters established pursuant to § 62.14453, as applicable;

(c) The waste management plan as specified in § 62.14431;

(d) The highest maximum operating parameter and the lowest minimum operating parameter for each operating parameter recorded for the calendar year being reported, pursuant to § 62.14453, as applicable;

(e) The highest maximum operating parameter and the lowest minimum operating parameter, as applicable, for each operating parameter recorded pursuant to § 62.14453 for the calendar year preceding the year being reported, in order to provide a summary of the performance of the HMIWI over a 2-year period;

(f) Any information recorded under § 62.14460(c) through (e) for the calendar year being reported;

(g) Any information recorded under § 62.14460(c) through (e) for the calendar year preceding the year being reported, in order to provide a summary of the performance of the HMIWI over a 2-year period;

(h) The results of any performance test conducted during the reporting period;

(i) If no exceedances or malfunctions occurred during the calendar year being reported, a statement that no exceedances occurred during the reporting period;

(j) Any use of the bypass stack, duration of such use, reason for malfunction, and corrective action taken; and

(k) Records of the annual equipment inspections, any required maintenance, and any repairs not completed within 10 days of an inspection or the time frame established by the EPA Administrator (or delegated enforcement authority).

§62.14464 When must I submit reports?

(a) You must submit the information specified in §62.14463(a) through (c) no later than 60 days following the initial performance test.

(b) You must submit an annual report to the EPA Administrator (or delegated enforcement authority) no more than 1 year following the submission of the information in paragraph (a) of this section and you must submit subsequent reports no more than 1 year following the previous report (once the unit is subject to permitting requirements under title V of the Clean Air Act, you must submit these reports semiannually). The annual report must include the information specified in §62.14463(d) through (k), as applicable.

(c) You must submit semiannual reports containing any information recorded under §62.14460(c) through (e) no later than 60 days following the end of the semiannual reporting period. The first semiannual reporting period ends 6 months following the submission of information in paragraph (a) of this section. Subsequent reports must be submitted no later than 6 calendar months following the previous report.

§62.14465 Who must sign all submitted reports?

All reports must be signed by the facilities manager (defined in §62.14490).

COMPLIANCE SCHEDULE

§62.14470 When must I comply with this subpart if I plan to continue operation of my HMIWI?

If you plan to continue operation of your HMIWI, then you must follow the requirements in paragraph (a) or (b) of this section depending on when you plan to come into compliance with the requirements of this subpart.

(a) If you plan to continue operation and come into compliance with the requirements of this subpart by August 15, 2001, then you must complete the requirements of paragraphs (a)(1) through (a)(4) of this section.

(1) You must comply with the operator training and qualification requirements and inspection requirements (if applicable) of this subpart by August 15, 2001.

(2) You must achieve final compliance by August 15, 2001. This includes incorporating all process changes and/or completing retrofit construction, connecting the air pollution control equipment or process changes such that the HMIWI is brought on line, and ensuring that all necessary process changes and air pollution control equipment are operating properly.

(3) You must conduct the initial performance test required by §62.14450(a) (for small rural HMIWI) or §62.14451(a) (for HMIWI that are not small rural HMIWI) within 180 days after the date when you are required to achieve final compliance under paragraph (a)(2) of this section.

(4) You must submit an initial report including the results of the initial performance test and the waste management plan no later than 60 days following the initial performance test (see §§62.14463 and 62.14464 for complete reporting and recordkeeping requirements).

(b) If you plan to continue operation and come into compliance with the requirements of this subpart after August 15, 2001, but before September 15, 2002, then you must complete the requirements of paragraphs (b)(1) through (b)(4) of this section.

(1) You must comply with the operator training and qualification requirements and inspection requirements (if applicable) of this subpart by August 15, 2001.

(2) You must demonstrate that you are taking steps towards compliance with the emission limits in the subpart by completing the increments of progress in paragraphs (b)(2)(i) through (b)(2)(v) of this section. You must submit notification to the EPA Administrator (or delegated enforcement authority) within 10 business days of completing (or failing to complete by the applicable date) each of the increments of progress listed in paragraphs (b)(2)(i) through (b)(2)(v) of this section. Your notification must be signed by your facilities manager (defined in §62.14490).

(i) You must submit a final control plan by September 15, 2000. Your final control plan must, at a minimum, include a description of the air pollution control device(s) or process changes

that will be employed for each unit to comply with the emission limits and other requirements of this subpart.

(ii) You must award contract(s) for onsite construction, onsite installation of emission control equipment, or incorporation of process changes by April 15, 2001. You must submit a signed copy of the contract(s) awarded.

(iii) You must begin onsite construction, begin onsite installation of emission control equipment, or begin process changes needed to meet the emission limits as outlined in the final control plan by December 15, 2001.

(iv) You must complete onsite construction, installation of emission control equipment, or process changes by July 15, 2002.

(v) You must achieve final compliance by September 15, 2002. This includes incorporating all process changes and/or completing retrofit construction as described in the final control plan, connecting the air pollution control equipment or process changes such that the HMIWI is brought on line, and ensuring that all necessary process changes and air pollution control equipment are operating properly.

(3) You must conduct the initial performance test required by § 62.14450(a) (for small rural HMIWI) or § 62.14451(a) (for HMIWI that are not small rural HMIWI) within 180 days after the date when you are required to achieve final compliance under paragraph (b)(2)(v) of this section.

(4) You must submit an initial report including the result of the initial performance test and the waste management plan no later than 60 days following the initial performance test (see §§ 62.14463 and 62.14464 for complete reporting and recordkeeping requirements).

§ 62.14471 When must I comply with this subpart if I plan to shut down?

If you plan to shut down, then you must follow the requirements in either paragraph (a) or (b) of this section depending on when you plan to shut down.

(a) If you plan to shut down by August 15, 2001, rather that come into compliance with the requirements of this subpart, then you must shut down by August 15, 2001, to avoid coverage under any of the requirements of this subpart.

(b) If you plan to shut down rather than come into compliance with the requirements of this subpart, but are unable to shut down by August 15, 2001, then you may petition EPA for an extension by following the procedures outlined in paragraphs (b)(1) through (b)(3) of this section.

(1) You must submit your request for an extension to the EPA Administrator (or delegated enforcement authority) by November 13, 2000. Your request must include:

(i) Documentation of the analyses undertaken to support your need for an extension, including an explanation of why your requested extension date is sufficient time for you to shut down while August 15, 2001, does not provide sufficient time for shut down. Your documentation must include an evaluation of the option to transport your waste offsite to a commercial medical waste treatment and disposal facility on a temporary or permanent basis; and

(ii) Documentation of incremental steps of progress, including dates for completing the increments of progress, that you will take towards shutting down. Some suggested incremental steps of progress towards shut down are provided as follows:

If you . . .	Then your increments of progress could be . . .
Need an extension so you can install an onsite alternative waste treatment technology before you shut down your HMIWI,.	Date when you will enter into a contract with an alternative treatment technology vendor, Date for initiating onsite construction or installation of the alternative technology, and Date for completing onsite construction or installation of the alternative technology, and Date for shutting down the HMIWI.
Need an extension so you can acquire the services of a commercial medical/infectious waste disposal company before you shut down your HMIWI,.	Date when price quotes will be obtained from commercial disposal companies, Date when you will enter into a contract with a commercial disposal company, and

If you . . .	Then your increments of progress could be . . .
	Date for shutting down the HMIWI.

(2) You must shut down no later than September 15, 2002.

(3) You must comply with the operator training and qualification requirements and inspection requirements (if applicable) of this subpart by August 15, 2001.

§62.14472 When must I comply with this subpart if I plan to shut down and later restart?

If you wish to shut down and later restart, then you must follow the compliance times in paragraph (a), (b), or (c) of this section depending on when you shut down and restart.

(a) If you plan to shut down and restart prior to September 15, 2002, then you must:

(1) Meet the compliance schedule outlined in §63.14470(a) if you restart prior to August 15, 2001; or

(2) Meet the compliance schedule outlined in §62.14470(b) if you restart after August 15, 2001. Any missed increments of progress need to be completed prior to or upon the date of restart.

(b) If you plan to shut down by August 15, 2001, and restart after September 15, 2002, then you must complete the requirements of paragraphs (b)(1) through (b)(5) of this section.

(1) You must shut down by August 15, 2001.

(2) You must comply with the operator training and qualification requirements and inspection requirements (if applicable) of this subpart before restarting your HMIWI.

(3) You must achieve final compliance upon restarting your HMIWI. This includes incorporating all process changes and/or completing retrofit construction, connecting the air pollution control equipment or process changes such that the HMIWI is brought on line, and ensuring that all necessary process changes and air pollution control equipment are operating properly.

(4) You must conduct the initial performance test required by §62.14450(a) (for small rural HMIWI) or §62.14451(a) (for HMIWI that are not small rural HMIWI) within 180 days after the date when you restart.

(5) You must submit an initial report including the results of the initial performance test and the waste management plan no later than 60 days following the initial performance test (see §§62.14463 and 62.14464 for complete reporting and recordkeeping requirements).

(c) If you plan to shut down after August 15, 2001, and restart after September 15, 2002, then you must complete the requirements of paragraphs (c)(1) and (c)(2) of this section.

(1) You must petition EPA for an extension by following the procedures outlined in §63.14471 paragraphs (b)(1) through (b)(3).

(2) You must comply with the requirements of paragraphs (b)(2) through (b)(5) of this section.

PERMITTING OBLIGATION

§62.14480 Does this subpart require me to obtain an operating permit under title V of the Clean Air Act and implementing regulations?

This subpart requires you to obtain an operating permit under title V of the Clean Air Act and implementing regulations (''title V permit'') unless you are only subject to the recordkeeping and reporting requirements listed at §62.14400(b)(1) or (b)(2), and §62.14400(c), of this subpart. Also, if you own or operate a unit described in §62.14400(b)(3), (b)(4), (b)(5) or (b)(6), you are not subject to any requirements of this subpart; therefore, this subpart does not require you to obtain a title V permit.

§62.14481 When must I submit a title V permit application for my HMIWI?

You must submit a title V permit application in time for it to be determined or deemed complete by no later than September 15, 2000 or by the effective date of a title V permits program in the jurisdiction in which the unit is located, whichever is later. (An earlier deadline may apply if your HMIWI is also subject to title V permitting requirements because of some other triggering requirement.) A ''complete'' title V permit application is one that has been approved by the appropriate permitting authority as complete

under Section 503 of the Clean Air Act and 40 CFR parts 70 and 71. It is not enough to have submitted a title V permit application by September 15, 2000 because the application must be determined or deemed complete by the permitting authority by that date for your HMIWI to operate after that date in compliance with Federal law.

DEFINITIONS

§ 62.14490 Definitions.

Batch HMIWI means an HMIWI that is designed such that neither waste charging nor ash removal can occur during combustion.

Biologicals means preparations made from living organisms and their products, including vaccines, cultures, etc., intended for use in diagnosing, immunizing, or treating humans or animals or in research pertaining thereto.

Blood products means any product derived from human blood, including but not limited to blood plasma, platelets, red or white blood corpuscles, and other derived licensed products, such as interferon, etc.

Body fluids means liquid emanating or derived from humans and limited to blood; dialysate; amniotic, cerebrospinal, synovial, pleural, peritoneal and pericardial fluids; and semen and vaginal secretions.

Bypass stack means a device used for discharging combustion gases to avoid severe damage to the air pollution control device or other equipment.

Chemotherapeutic waste means waste material resulting from the production or use of antineoplastic agents used for the purpose of stopping or reversing the growth of malignant cells.

Co-fired combustor means a unit combusting hospital waste and/or medical/infectious waste with other fuels or wastes (e.g., coal, municipal solid waste) and subject to an enforceable requirement limiting the unit to combusting a fuel feed stream, 10 percent or less of the weight of which is comprised, in aggregate, of hospital waste and medical/infectious waste as measured on a calendar quarter basis. For purposes of this definition, pathological waste, chemotherapeutic waste, and low-level radioactive waste are considered ''other'' wastes when calculating the percentage of hospital waste and medical/infectious waste combusted.

Continuous emission monitoring system or *CEMS* means a monitoring system for continuously measuring and recording the emissions of a pollutant.

Continuous HMIWI means an HMIWI that is designed to allow waste charging and ash removal during combustion.

Dioxins/furans means the combined emissions of tetra-through octa-chlorinated dibenzo-para-dioxins and dibenzofurans, as measured by EPA Reference Method 23.

Dry scrubber means an add-on air pollution control system that injects dry alkaline sorbent (dry injection) or sprays an alkaline sorbent (spray dryer) to react with and neutralize acid gases in the HMIWI exhaust stream forming a dry powder material.

Fabric filter or *baghouse* means an add-on air pollution control system that removes particulate matter (PM) and nonvaporous metals emissions by passing flue gas through filter bags.

Facilities manager means the individual in charge of purchasing, maintaining, and operating the HMIWI or the owner's or operator's representative responsible for the management of the HMIWI. Alternative titles may include director of facilities or vice president of support services.

High-air phase means the stage of the batch operating cycle when the primary chamber reaches and maintains maximum operating temperatures.

Hospital means any facility which has an organized medical staff, maintains at least six inpatient beds, and where the primary function of the institution is to provide diagnostic and therapeutic patient services and continuous nursing care primarily to human inpatients who are not related and who stay on average in excess of 24 hours per admission. This definition does not include facilities maintained for the sole purpose of providing nursing or convalescent care to human patients who generally are not acutely ill but who require continuing medical supervision.

Hospital/medical/infectious waste incinerator or HMIWI or *HMIWI unit* means any device that combusts any amount

of hospital waste and/or medical/infectious waste.

Hospital/medical/infectious waste incinerator operator or *HMIWI operator* means any person who operates, controls or supervises the day-to-day operation of an HMIWI.

Hospital waste means discards generated at a hospital, except unused items returned to the manufacturer. The definition of hospital waste does not include human corpses, remains, and anatomical parts that are intended for interment or cremation.

Infectious agent means any organism (such as a virus or bacteria) that is capable of being communicated by invasion and multiplication in body tissues and capable of causing disease or adverse health impacts in humans.

Intermittent HMIWI means an HMIWI that is designed to allow waste charging, but not ash removal, during combustion.

Large HMIWI means:

(1) Except as provided in paragraph (2) of this definition;

(i) An HMIWI whose maximum design waste burning capacity is more than 500 pounds per hour; or

(ii) A continuous or intermittent HMIWI whose maximum charge rate is more than 500 pounds per hour; or

(iii) A batch HMIWI whose maximum charge rate is more than 4,000 pounds per day.

(2) The following are not large HMIWI:

(i) A continuous or intermittent HMIWI whose maximum charge rate is less than or equal to 500 pounds per hour; or

(ii) A batch HMIWI whose maximum charge rate is less than or equal to 4,000 pounds per day.

Low-level radioactive waste means waste material which contains radioactive nuclides emitting primarily beta or gamma radiation, or both, in concentrations or quantities that exceed applicable federal or State standards for unrestricted release. Low-level radioactive waste is not high-level radioactive waste, spent nuclear fuel, or byproduct material as defined by the Atomic Energy Act of 1954 (42 U.S.C. 2014(e)(2)).

Malfunction means any sudden, infrequent, and not reasonably preventable failure of air pollution control equipment, process equipment, or a process to operate in a normal or usual manner. Failures that are caused, in part, by poor maintenance or careless operation are not malfunctions. During periods of malfunction the operator must operate within established parameters as much as possible, and monitoring of all applicable operating parameters must continue until all waste has been combusted or until the malfunction ceases, whichever comes first.

Maximum charge rate means:

(1) For continuous and intermittent HMIWI, 110 percent of the lowest 3-hour average charge rate measured during the most recent performance test demonstrating compliance with all applicable emission limits.

(2) For batch HMIWI, 110 percent of the lowest daily charge rate measured during the most recent performance test demonstrating compliance with all applicable emission limits.

Maximum design waste burning capacity means:

(1) For intermittent and continuous HMIWI,

$$C = P_v \times 15{,}000/8{,}500 \qquad \text{(Eq. 4)}$$

Where:

C = HMIWI capacity, lb/hr

P_V = primary chamber volume, ft^3

15,000 = primary chamber heat release rate factor, $Btu/ft^3/hr$

8,500 = standard waste heating value, Btu/lb;

(2) For batch HMIWI,

$$C = P_v \times 4.5/8 \qquad \text{(Eq. 5)}$$

Where:

C = HMIWI capacity, lb/hr

P_V = primary chamber volume, ft^3

4.5 = waste density, lb/ft^3

8 = typical hours of operation of a batch HMIWI, hours.

Maximum fabric filter inlet temperature means 110 percent of the lowest 3-hour average temperature at the inlet to the fabric filter (taken, at a minimum, once every minute) measured during the most recent performance test demonstrating compliance with the dioxin/furan emission limit.

Maximum flue gas temperature means 110 percent of the lowest 3-hour average temperature at the outlet from the wet scrubber (taken, at a minimum, once every minute) measured during the most recent performance test demonstrating compliance with the mercury (Hg) emission limit.

Medical/infectious waste means any waste generated in the diagnosis, treatment, or immunization of human beings or animals, in research pertaining thereto, or in the production or testing of biologicals that is listed in paragraphs (1) through (7) of this definition. The definition of medical/infectious waste does not include hazardous waste identified or listed under the regulations in part 261 of this chapter; household waste, as defined in § 261.4(b)(1) of this chapter; ash from incineration of medical/infectious waste, once the incineration process has been completed; human corpses, remains, and anatomical parts that are intended for interment or cremation; and domestic sewage materials identified in § 261.4(a)(1) of this chapter.

(1) Cultures and stocks of infectious agents and associated biologicals, including: Cultures from medical and pathological laboratories; cultures and stocks of infectious agents from research and industrial laboratories; wastes from the production of biologicals; discarded live and attenuated vaccines; and culture dishes and devices used to transfer, inoculate, and mix cultures.

(2) Human pathological waste, including tissues, organs, and body parts and body fluids that are removed during surgery or autopsy, or other medical procedures, and specimens of body fluids and their containers.

(3) Human blood and blood products including:

(i) Liquid waste human blood;

(ii) Products of blood;

(iii) Items saturated and/or dripping with human blood; or

(iv) Items that were saturated and/or dripping with human blood that are now caked with dried human blood; including serum, plasma, and other blood components, and their containers, which were used or intended for use in either patient care, testing and laboratory analysis or the development of pharmaceuticals. Intravenous bags are also include in this category.

(4) Sharps that have been used in animal or human patient care or treatment or in medical, research, or industrial laboratories, including hypodermic needles, syringes (with or without the attached needle), Pasteur pipettes, scalpel blades, blood vials, needles with attached tubing, and culture dishes (regardless of presence of infectious agents). Also included are other types of broken or unbroken glassware that were in contact with infectious agents, such as used slides and cover slips.

(5) Animal waste including contaminated animal carcasses, body parts, and bedding of animals that were known to have been exposed to infectious agents during research (including research in veterinary hospitals), production of biologicals or testing of pharmaceuticals.

(6) Isolation wastes including biological waste and discarded materials contaminated with blood, excretions, exudates, or secretions from humans who are isolated to protect others from certain highly communicable diseases, or isolated animals known to be infected with highly communicable diseases.

(7) Unused sharps including the following unused, discarded sharps: hypodermic needles, suture needles, syringes, and scalpel blades.

Medium HMIWI means:

(1) Except as provided in paragraph (2) of this definition;

(i) An HMIWI whose maximum design waste burning capacity is more than 200 pounds per hour but less than or equal to 500 pounds per hour; or

(ii) A continuous or intermittent HMIWI whose maximum charge rate is more than 200 pounds per hour but less than or equal to 500 pounds per hour; or

(iii) A batch HMIWI whose maximum charge rate is more than 1,600 pounds per day but less than or equal to 4,000 pounds per day.

(2) The following are not medium HMIWI:

(i) A continuous or intermittent HMIWI whose maximum charge rate is less than or equal to 200 pounds per hour or more than 500 pounds per hour; or

(ii) A batch HMIWI whose maximum charge rate is more than 4,000 pounds per day or less than or equal to 1,600 pounds per day.

Minimum dioxin/furan sorbent flow rate means 90 percent of the highest 3-hour average dioxin/furan sorbent flow rate (taken, at a minimum, once every hour) measured during the most recent performance test demonstrating compliance with the dioxin/furan emission limit.

Minimum Hg sorbent flow rate means 90 percent of the highest 3-hour average Hg sorbent flow rate (taken, at a minimum, once every hour) measured during the most recent performance test demonstrating compliance with the Hg emission limit.

Minimum horsepower or amperage means 90 percent of the highest 3-hour average horsepower or amperage to the wet scrubber (taken, at a minimum, once every minute) measured during the most recent performance test demonstrating compliance with the applicable emission limits.

Minimum hydrogen chloride (HCl) sorbent flow rate means 90 percent of the highest 3-hour average HCl sorbent flow rate (taken, at a minimum, once every hour) measured during the most recent performance test demonstrating compliance with the HCl emission limit.

Minimum pressure drop across the wet scrubber means 90 percent of the highest 3-hour average pressure drop across the wet scrubber PM control device (taken, at a minimum, once every minute) measured during the most recent performance test demonstrating compliance with the PM emission limit.

Minimum scrubber liquor flow rate means 90 percent of the highest 3-hour average liquor flow rate at the inlet to the wet scrubber (taken, at a minimum, once every minute) measured during the most recent performance test demonstrating compliance with all applicable emission limits.

Minimum scrubber liquor pH means 90 percent of the highest 3-hour average liquor pH at the inlet to the wet scrubber (taken, at a minimum, once every minute) measured during the most recent performance test demonstrating compliance with the HCl emission limit.

Minimum secondary chamber temperature means 90 percent of the highest 3-hour average secondary chamber temperature (taken, at a minimum, once every minute) measured during the most recent performance test demonstrating compliance with the PM, CO, or dioxin/furan emission limits.

Modification or *Modified HMIWI* means any change to an HMIWI unit after March 16, 1998, such that:

(1) The cumulative costs of the modifications, over the life of the unit, exceed 50 per centum of the original cost of the construction and installation of the unit (not including the cost of any land purchased in connection with such construction or installation) updated to current costs, or

(2) The change involves a physical change in or change in the method of operation of the unit which increases the amount of any air pollutant emitted by the unit for which standards have been established under section 129 or section 111.

Operating day means a 24-hour period between 12:00 midnight and the following midnight during which any amount of hospital waste or medical/infectious waste is combusted at any time in the HMIWI.

Operation means the period during which waste is combusted in the incinerator excluding periods of startup or shutdown.

Particulate matter or *PM* means the total particulate matter emitted from an HMIWI as measured by EPA Reference Method 5 or EPA Reference Method 29.

Pathological waste means waste material consisting of only human or animal remains, anatomical parts, and/or tissue, the bags/containers used to collect and transport the waste material, and animal bedding (if applicable).

Primary chamber means the chamber in an HMIWI that receives waste material, in which the waste is ignited, and from which ash is removed.

Pyrolysis means the endothermic gasification of hospital waste and/or medical/infectious waste using external energy.

Secondary chamber means a component of the HMIWI that receives combustion gases from the primary chamber and in which the combustion process is completed.

Shutdown means the period of time after all waste has been combusted in the primary chamber. For continuous HMIWI, shutdown must commence no less than 2 hours after the last charge to the incinerator. For intermittent HMIWI, shutdown must commence no less than 4 hours after the last charge to the incinerator. For batch HMIWI, shutdown must commence no less than 5 hours after the high-air phase of combustion has been completed.

Small HMIWI means:

(1) Except as provided in paragraph (2) of this definition;

(i) An HMIWI whose maximum design waste burning capacity is less than or equal to 200 pounds per hour; or

(ii) A continuous or intermittent HMIWI whose maximum charge rate is less than or equal to 200 pounds per hour; or

(iii) A batch HMIWI whose maximum charge rate is less than or equal to 1,600 pounds per day.

(2) The following are not small HMIWI:

(i) A continuous or intermittent HMIWI whose maximum charge rate is more than 200 pounds per hour;

(ii) A batch HMIWI whose maximum charge rate is more than 1,600 pounds per day.

Small rural HMIWI means a small HMIWI which is located more than 50 miles from the boundary of the nearest Standard Metropolitan Statistical Area and which burns less than 2,000 pounds per week of hospital waste and medical/ infectious waste.

Standard conditions means a temperature of 20 °C and a pressure of 101.3 kilopascals.

Standard Metropolitan Statistical Area or *SMSA* means any areas listed in OMB Bulletin No. 93–17 entitled ''Revised Statistical Definitions for Metropolitan Areas'' dated June 30, 1993. This information can also be obtained from the nearest Metropolitan Planning Organization.

Startup means the period of time between the activation of the system and the first charge to the unit. For batch HMIWI, startup means the period of time between activation of the system and ignition of the waste.

Wet scrubber means an add-on air pollution control device that utilizes an alkaline scrubbing liquor to collect particulate matter (including nonvaporous metals and condensed organics) and/or to absorb and neutralize acid gases.

DELEGATION OF AUTHORITY

§ 62.14495 What authorities will be retained by the EPA Administrator?

The following authorities will be retained by the EPA Administrator and not transferred to the State or Tribe:

(a) The requirements of § 62.14453(b) establishing operating parameters when using controls other than a dry scrubber followed by a fabric filter, a wet scrubber, or a dry scrubber followed by a fabric filter and a wet scrubber.

(b) Alternative methods of demonstrating compliance under 40 CFR 60.8.

TABLE 1 OF SUBPART HHH OF PART 62—EMISSION LIMITS FOR SMALL RURAL, SMALL, MEDIUM, AND LARGE HMIWI

Pollutant	Units (7 percent oxygen, dry basis at standard conditions)	Emission limits			
		HMIWI size			
		Small rural	Small	Medium	Large
Particulate matter.	Milligrams per dry standard cubic meter (grains per dry standard cubic foot).	197 (0.086)	115 (0.05)	69 (0.03)	34 (0.015)
Carbon monoxide.	Parts per million by volume	40	40	40	40
Dioxins/furans.	Nanograms per dry standard cubic meter total dioxins/furans (grains per billion dry standard cubic feet) or nanograms per dry standard cubic meter TEQ (grains per billion dry standard cubic feet).	800 (350) or 15 (6.6)	125 (55) or 2.3 (1.0)	125 (55) or 2.3 (1.0)	125 (55) or 2.3 (1.0)
Hydrogen chloride.	Parts per million by volume or percent reduction	3,100	100 or 93%	100 or 93%	100 or 93%
Sulfur dioxide.	Parts per million by volume	55	55	55	55
Nitrogen oxides.	Parts per million by volume	250	250	250	250
Lead	Milligrams per dry standard cubic meter (grains per thousand dry standard cubic feet) or percent reduction.	10 (4.4)	1.2 (0.52) or 70%	1.2 (0.52) or 70%	1.2 (0.52) or 70%
Cadmium	Milligrams per dry standard cubic meter (grains per thousand dry standard cubic feet) or percent reduction.	4 (1.7)	0.16 (0.07) or 65%	0.16 (0.07) or 65%	0.16 (0.07) or 65%
Mercury	Milligrams per dry standard cubic meter (grains per thousand dry standard cubic feet) or percent reduction.	7.5 (3.3)	0.55 (0.24) or 85%	0.55 (0.24) or 85%	0.55 (0.24) or 85%

TABLE 2 OF SUBPART HHH OF PART 62—TOXIC EQUIVALENCY FACTORS

Dioxin/furan congener	Toxic equivalency factor
2,3,7,8-tetrachlorinated dibenzo-p-dioxin	1
1,2,3,7,8-pentachlorinated dibenzo-p-dioxin	0.5
1,2,3,4,7,8-hexachlorinated dibenzo-p-dioxin	0.1
1,2,3,7,8,9-hexachlorinated dibenzo-p-dioxin	0.1
1,2,3,6,7,8-hexachlorinated dibenzo-p-dioxin	0.1
1,2,3,4,6,7,8-heptachlorinated dibenzo-p-dioxin	0.01
Octachlorinated dibenzo-p-dioxin	0.001
2,3,7,8-tetrachlorinated dibenzofuran	0.1
2,3,4,7,8-pentachlorinated dibenzofuran	0.5

TABLE 2 OF SUBPART HHH OF PART 62—TOXIC EQUIVALENCY FACTORS—Continued

Dioxin/furan congener	Toxic equivalency factor
1,2,3,7,8-pentachlorinated dibenzofuran	0.05
1,2,3,4,7,8-hexachlorinated dibenzofuran	0.1
1,2,3,6,7,8-hexachlorinated dibenzofuran	0.1
1,2,3,7,8,9-hexachlorinated dibenzofuran	0.1
2,3,4,6,7,8-hexachlorinated dibenzofuran	0.1
1,2,3,4,6,7,8-heptachlorinated dibenzofuran	0.01
1,2,3,4,7,8,9-heptachlorinated dibenzofuran	0.01
Octachlorinated dibenzofuran	0.001

TABLE 3 OF SUBPART HHH OF PART 62—OPERATING PARAMETERS TO BE MONITORED AND MINIMUM MEASUREMENT AND RECORDING FREQUENCIES

Operating parameters to be monitored	Minimum frequency		HMIWI			
	Data measurement	Data recording	Small rural HMIWI	HMIWI [a] with dry scrubber followed by fabric filter	HMIWI [a] with wet scrubber	HMIWI [a] with dry scrubber followed by fabric filter and wet scrubber
Maximum operating parameters:						
Maximum charge rate	Once per charge.	Once per charge.	✔	✔	✔	✔
Maximum fabric filter inlet temperature	Continuous	Once per minute.		✔		✔
Maximum flue gas temperature	Continuous	Once per minute.			✔	✔
Minimum operating parameters:						
Minimum secondary chamber temperature	Continuous	Once per minute.	✔	✔	✔	✔

TABLE 3 OF SUBPART HHH OF PART 62—OPERATING PARAMETERS TO BE MONITORED AND MINIMUM MEASUREMENT AND RECORDING FREQUENCIES—Continued

Operating parameters to be monitored	Minimum frequency		HMIWI			
	Data measurement	Data recording	Small rural HMIWI	HMIWI [a] with dry scrubber followed by fabric filter	HMIWI [a] with wet scrubber	HMIWI [a] with dry scrubber followed by fabric filter and wet scrubber
Minimum dioxin/furan sorbent flow rate	Hourly	Once per hour.		✔		✔
Minimum HCl sorbent flow rate	Hourly	Once per hour.		✔		✔
Minimum mercury (Hg) sorbent flow rate	Hourly	Once per hour.		✔		✔
Minimum pressure drop across the wet scrubber or minimum horsepower or amperage to wet scrubber.	Continuous	Once per minute.			✔	✔
Minimum scrubber liquor flow rate	Continuous	Once per minute.			✔	✔
Minimum scrubber liquor pH	Continuous	Once per minute.			✔	✔

[a] Does not include small rural HMIWI.

Subpart JJJ—Federal Plan Requirements for Small Municipal Waste Combustion Units Constructed on or Before August 30, 1999

SOURCE: 68 FR 5158, Jan. 31, 2003, unless otherwise noted.

INTRODUCTION

§ 62.15000 What is the purpose of this subpart?

(a) This subpart establishes emission requirements and compliance schedules for the control of emissions from existing small municipal waste combustion units that are not covered by an EPA approved and effective State plan. The pollutants addressed by these emission requirements are listed in tables 2, 3, 4, and 5 of this subpart. These emission requirements are developed in accordance with sections 111(d) and 129 of the Clean Air Act and subpart B of 40 CFR part 60.

(b) In this subpart, ''you'' means the owner or operator of a small municipal waste combustion unit.

§ 62.15005 What are the principal components of this subpart?

This subpart contains five major components:

(a) Increments of progress toward compliance.

(b) Good combustion practices:

(1) Operator training.

(2) Operator certification.

(3) Operating requirements.

(c) Emission limits.

(d) Monitoring and stack testing.

(e) Recordkeeping and reporting.

APPLICABILITY OF THIS SUBPART

§ 62.15010 Is my municipal waste combustion unit covered by this subpart?

(a) This subpart applies to your small municipal waste combustion unit if the unit meets the criteria in paragraphs (a)(1) and (a)(2) and the criteria in either paragraph (a)(3) or (a)(4) of this section:

(1) Your municipal waste combustion unit has the capacity to combust at least 35 tons per day of municipal solid waste or refuse-derived fuel but no more than 250 tons per day of municipal solid waste or refuse-derived fuel.

(2) Your municipal waste combustion unit commenced construction on or before August 30, 1999.

(3) Your municipal waste combustion unit is not regulated by an EPA approved and effective State or Tribal plan.

(4) Your municipal waste combustion unit is located in any State whose approved State plan is subsequently vacated in whole or in part, or the municipal waste combustion unit is located in Indian country if the approved tribal plan for that area is subsequently vacated in whole or in part.

(b) If you make a change to your municipal waste combustion unit that meets the definition of modification or reconstruction after June 6, 2001, your municipal waste combustion unit becomes subject to subpart AAAA of 40 CFR part 60 (New Source Performance Standards for Small Municipal Waste Combustion Units) and this subpart no longer applies to your unit.

(c) If you make physical or operational changes to your existing municipal waste combustion unit primarily to comply with this subpart, then subpart AAAA of 40 CFR part 60 (New Source Performance Standards for Small Municipal Waste Combustion Units) does not apply to your unit. Such changes do not constitute modifications or reconstructions under subpart AAAA of 40 CFR part 60.

(d) Upon approval of the State or tribal plan, this subpart will no longer apply, except for the provisions of this subpart that may have been incorporated by reference under the State or Tribal plan, or delegated to the State by the Administrator.

§ 62.15015 Can my small municipal waste combustion unit be covered by both a State plan and this subpart?

(a) If your municipal waste combustion unit is located in a State that has a State plan that has not been approved by the EPA or has not become effective, then this subpart applies and the State plan would not apply to your municipal waste combustion unit. However, the State could enforce the requirements of a State regulation while your municipal waste combustion unit is still subject to this subpart.

(b) After the State plan is approved by the EPA and becomes effective, your municipal waste combustion unit is no longer subject to this subpart and will only be subject to the approved and effective State plan.

§ 62.15020 Can my small municipal waste combustion unit be exempt from this subpart?

(a) *Small municipal waste combustion units that combust less than 11 tons per day.* Your unit is exempt from this subpart if four requirements are met:

(1) Your municipal waste combustion unit is subject to a federally enforceable permit limiting municipal solid waste combustion to less than 11 tons per day.

(2) You notify the Administrator that the unit qualifies for this exemption.

(3) You submit to the Administrator a copy of the federally enforceable permit.

(4) You keep daily records of the amount of municipal solid waste combusted.

(b) *Small power production units.* Your unit is exempt from this subpart if four requirements are met:

(1) Your unit qualifies as a small power production facility under section 3(17)(C) of the Federal Power Act (16 U.S.C. 796(17)(C)).

(2) Your unit combusts homogeneous waste (excluding refuse-derived fuel) to produce electricity.

(3) You notify the Administrator that the unit qualifies for this exemption.

(4) You submit to the Administrator documentation that the unit qualifies for this exemption.

(c) *Cogeneration units.* Your unit is exempt from this subpart if four requirements are met:

(1) Your unit qualifies as a cogeneration facility under section 3(18)(B) of the Federal Power Act (16 U.S.C. 796(18)(B)).

(2) Your unit combusts homogeneous waste (excluding refuse-derived fuel) to produce electricity and steam or other forms of energy used for industrial, commercial, heating, or cooling purposes.

(3) You notify the Administrator that the unit qualifies for this exemption.

(4) You submit to the Administrator documentation that the unit qualifies for this exemption.

(d) *Municipal waste combustion units that combust only tires.* Your unit is exempt from this subpart if three requirements are met:

(1) Your municipal waste combustion unit combusts a single-item waste

stream of tires and no other municipal waste (the unit can cofire coal, fuel oil, natural gas, or other nonmunicipal solid waste).

(2) You notify the Administrator that the unit qualifies for this exemption.

(3) You provide the Administrator documentation that the unit qualifies for this exemption.

(e) *Hazardous waste combustion units.* Your unit is exempt from this subpart if the unit has received a permit under section 3005 of the Solid Waste Disposal Act.

(f) *Materials recovery units.* Your unit is exempt from this subpart if the unit combusts waste mainly to recover metals. Primary and secondary smelters may qualify for this exemption.

(g) *Cofired units.* Your unit is exempt from this subpart if four requirements are met:

(1) Your unit has a federally enforceable permit limiting municipal solid waste combustion to 30 percent of the total fuel input by weight.

(2) You notify the Administrator that the unit qualifies for this exemption.

(3) You provide the Administrator with a copy of the federally enforceable permit.

(4) You record the weights, each quarter, of municipal solid waste and of all other fuels combusted.

(h) *Plastics/rubber recycling units.* Your unit is exempt from this subpart if four requirements are met:

(1) Your pyrolysis/combustion unit is an integrated part of a plastics/rubber recycling unit as defined under ''Definitions'' (§ 62.15410).

(2) You record the weight, each quarter, of plastics, rubber, and rubber tires processed.

(3) You record the weight, each quarter, of feed stocks produced and marketed from chemical plants and petroleum refineries.

(4) You keep the name and address of the purchaser of the feed stocks.

(i) *Units that combust fuels made from products of plastics/rubber recycling plants.* Your unit is exempt from this subpart if two requirements are met:

(1) Your unit combusts gasoline, diesel fuel, jet fuel, fuel oils, residual oil, refinery gas, petroleum coke, liquified petroleum gas, propane, or butane produced by chemical plants or petroleum refineries that use feed stocks produced by plastics/rubber recycling units.

(2) Your unit does not combust any other municipal solid waste.

(j) *Cement kilns.* Your unit is exempt from this subpart if your cement kiln combusts municipal solid waste.

(k) *Air curtain incinerators.* If your air curtain incinerator (see § 62.15410 for definition) combusts 100 percent yard waste, then you must meet only the requirements under ''Air Curtain Incinerators That Burn 100 Percent Yard Waste'' (§§ 62.15365 through 62.15385) and the title V operating permit requirements of this subpart. However, if your air curtain incinerator combusts municipal solid waste other than yard waste, it is subject to all provisions of this subpart.

§ 62.15025 How do I determine if my small municipal waste combustion unit is covered by an approved and effective State or Tribal Plan?

This part (40 CFR part 62) contains a list of all States and tribal areas with approved Clean Air Act section 111(d) and section 129 plans in effect. However, this part is only updated once per year. Thus, if this part does not indicate that your State or tribal area has an approved and effective plan, you should contact your State environmental agency's air director or your EPA Regional Office to determine if approval has occurred since publication of the most recent version of this part.

§ 62.15030 What are my obligations under this subpart if I reduce my small municipal waste combustion unit's combustion capacity to less than 35 tons per day?

If you reduce your small municipal waste combustion unit's combustion capacity to less than 35 tons per day by the final compliance date, you must comply only with the following requirements:

(a) You must submit a final control plan according to the schedule in table 1 of this subpart and comply with § 62.15065(b).

(b) The final control plan must, at a minimum, include two items:

(1) A description of the physical changes that will be made to accomplish the reduction in combustion capacity. A permit restriction or a change in the method of operation does not qualify as a reduction in combustion capacity.

(2) Calculations of the current maximum combustion capacity and the planned maximum combustion capacity after the reduction. Use the equations specified under §62.15390(d) and (e) to calculate the combustion capacity of a municipal waste combustion unit.

(c) You must complete the physical changes to accomplish the reduction in combustion capacity by the final compliance date specified in table 1 of this subpart.

(d) If you comply with all of the requirements specified in paragraphs (a), (b), and (c) of this section, you are no longer subject to this subpart.

(e) You must comply with the requirements specified in §62.15395 and §62.15400 regarding title V permitting. If you comply with all of the requirements specified in paragraphs (a), (b), and (c) of this section, you are no longer subject to title V permitting requirements as a result of this subpart. You will remain subject to title V permitting requirements, however, if you are subject as a result of one or more of the applicability criteria in 40 CFR 70.3(a) and (b) or 71.3(a) and (b).

§62.15035 Is my small municipal waste combustion unit subject to different requirements based on plant capacity?

This subpart specifies different requirements for two different subcategories of municipal waste combustion units. These two subcategories are based on aggregate capacity of the municipal waste combustion plant as defined in paragraphs (a) and (b) of this section.

(a) *Class I units.* These are small municipal waste combustion units that are located at municipal waste combustion plants with aggregate plant combustion capacity greater than 250 tons per day of municipal solid waste. (*See* the definition of municipal waste combustion plant capacity in §62.15410 for specification of which units at a plant are included in the aggregate capacity calculation.)

(b) *Class II units.* These are small municipal waste combustion units that are located at municipal waste combustion plants with aggregate plant combustion capacity of no more than 250 tons per day of municipal solid waste. (See the definition of municipal waste combustion plant capacity in §62.15410 for specification of which units at a plant are included in the aggregate capacity calculation.)

COMPLIANCE SCHEDULE AND INCREMENTS OF PROGRESS

§62.15040 What are the requirements for meeting increments of progress and achieving final compliance?

(a) *Class I units.* If you plan to achieve compliance more than 1 year following the effective date of this subpart and a permit modification is not required, or more than 1 year following the date of issuance of a revised construction or operation permit if a permit modification is required, you must meet five increments of progress:

(1) Submit a final control plan.

(2) Submit a notification of retrofit contract award.

(3) Initiate onsite construction.

(4) Complete onsite construction.

(5) Achieve final compliance.

(b) *Class II units.* If you plan to achieve compliance more than 1 year following the effective date of this subpart and a permit modification is not required, or more than 1 year following the date of issuance of a revised construction or operation permit if a permit modification is required, you must meet two increments of progress:

(1) Submit a final control plan.

(2) Achieve final compliance.

§62.15045 When must I complete each increment of progress?

(a) You must complete each increment of progress according to the compliance schedule in table 1 of this subpart for Class I and II units. If your Class I or Class II unit is listed in table 9 of this subpart, then you must complete each increment of progress according to the schedule in table 9 of this subpart. (*See* §62.15410 for definitions of classes.)

(b) For Class I units (*see* definition in § 62.15410) that must meet the five increments of progress, you must submit dioxins/furans stack test results for at least one test conducted during or after 1990. The stack tests must have been conducted according to the procedures specified under § 62.15245 and you must submit the stack test results when the final control plan is due for your Class I MWC unit according to the schedule in table 1 or table 9 of this subpart.

§ 62.15050 What must I include in the notifications of achievement of my increments of progress?

Your notification of achievement of increments of progress must include three items:

(a) Notification that the increment of progress has been achieved.

(b) Any items required to be submitted with the increment of progress (§§ 62.15065 through 62.15085).

(c) The notification must be signed by the owner or operator of the municipal waste combustion unit.

§ 62.15055 When must I submit the notifications of achievement of increments of progress?

Notifications of the achievement of increments of progress must be postmarked no later than 10 days after the compliance date for the increment.

§ 62.15060 What if I do not meet an increment of progress?

If you fail to meet an increment of progress, you must submit a notification to the Administrator postmarked within 10 business days after the specified date in table 1 of this subpart for achieving that increment of progress. This notification must inform the Administrator that you did not meet the increment. You must include in the notification an explanation of why the increment of progress was not met and your plan for meeting the increment as expeditiously as possible. You must continue to submit reports each subsequent month until the increment of progress is met.

§ 62.15065 How do I comply with the increment of progress for submittal of a final control plan?

For your final control plan increment of progress, you must complete two items:

(a) Submit the final control plan describing the devices for air pollution control and process changes that you will use to comply with the emission limits and other requirements of this subpart. If you plan to reduce your small municipal waste combustion unit's combustion capacity to less than 35 tons per day by the final compliance date, see § 62.15030.

(b) You must maintain an onsite copy of the final control plan.

§ 62.15070 How do I comply with the increment of progress for awarding contracts?

You must submit a signed copy of the contracts awarded to initiate onsite construction, initiate onsite installation of emission control equipment, and incorporate process changes. Submit the copy of the contracts with the notification that this increment of progress has been achieved. You do not need to include documents incorporated by reference or the attachments to the contracts.

§ 62.15075 How do I comply with the increment of progress for initiating onsite construction?

You must initiate onsite construction and installation of emission control equipment and initiate the process changes outlined in the final control plan.

§ 62.15080 How do I comply with the increment of progress for completing onsite construction?

You must complete onsite construction and installation of emission control equipment and complete process changes outlined in the final control plan.

§ 62.15085 How do I comply with the increment of progress for achieving final compliance?

For the final compliance increment of progress, you must complete two items:

(a) Complete all process changes and complete retrofit construction as specified in the final control plan.

(b) Connect the air pollution control equipment with the municipal waste combustion unit identified in the final control plan and complete process changes to the municipal waste combustion unit so that if the affected municipal waste combustion unit is brought online, all necessary process changes and air pollution control equipment are operating as designed.

§62.15090 What must I do if I close my municipal waste combustion unit and then restart my municipal waste combustion unit?

(a) If you close your municipal waste combustion unit but will reopen it prior to the applicable final compliance date in table 1 of this subpart, you must meet the increments of progress specified in §62.15040.

(b) If you close your municipal waste combustion unit but restart it after the applicable final compliance date in table 1 of this subpart, you must complete the emission control retrofit and meet the emission limits and good combustion practices on the date your municipal waste combustion unit restarts operation.

§62.15095 What must I do if I plan to permanently close my municipal waste combustion unit and not restart it?

(a) If you plan to close your municipal waste combustion unit rather than comply with this subpart, you must submit a closure notification, including the date of closure, to the Administrator by the date your final control plan is due.

(b) If the closure date is later than 1 year after the effective date of this subpart, you must enter into a legally binding closure agreement with the Administrator by the date your final control plan is due. The agreement must include two items:

(1) The date by which operation will cease. The closure date can be no later than the applicable final compliance date in table 1 of this subpart.

(2) For Class I units only, dioxins/furans stack test results for at least one test conducted during or after 1990. The stack tests must have been conducted according to the procedures specified under §62.15245.

GOOD COMBUSTION PRACTICES: OPERATOR TRAINING

§62.15100 What types of training must I do?

There are two types of required training:

(a) Training of operators of municipal waste combustion units using the EPA or a State-approved training course.

(b) Training of plant personnel using a plant-specific training course.

§62.15105 Who must complete the operator training course? By when?

(a) Three types of employees must complete the EPA operator training course:

(1) Chief facility operators.

(2) Shift supervisors.

(3) Control room operators.

(b) These employees must complete the operator training course by the later of three dates:

(1) One year after the effective date of this subpart.

(2) Six months after your municipal waste combustion unit starts up.

(3) The date before an employee assumes responsibilities that affect operation of the municipal waste combustion unit.

(c) The requirement in paragraph (a) of this section does not apply to chief facility operators, shift supervisors, and control room operators who have obtained full certification from the American Society of Mechanical Engineers on or before the effective date of this subpart.

(d) You may request that the EPA Administrator waive the requirement in paragraph (a) of this section for chief facility operators, shift supervisors, and control room operators who have obtained provisional certification from the American Society of Mechanical Engineers on or before the effective date of this subpart.

§62.15110 Who must complete the plant-specific training course?

All employees with responsibilities that affect how a municipal waste combustion unit operates must complete

the plant-specific training course. Include at least six types of employees:

(a) Chief facility operators.

(b) Shift supervisors.

(c) Control room operators.

(d) Ash handlers.

(e) Maintenance personnel.

(f) Crane or load handlers.

§ 62.15115 What plant-specific training must I provide?

For plant-specific training, you must do four things:

(a) For training at a particular plant, develop a specific operating manual for that plant by the later of two dates:

(1) Six months after your municipal waste combustion unit starts up.

(2) One year after the effective date of this subpart.

(b) Establish a program to review the plant-specific operating manual with people whose responsibilities affect the operation of your municipal waste combustion unit. Complete the initial review by the later of three dates:

(1) One year after the effective date of this subpart.

(2) Six months after your municipal waste combustion unit starts up.

(3) The date before an employee assumes responsibilities that affect operation of the municipal waste combustion unit.

(c) Update your manual annually.

(d) Review your manual with staff annually.

§ 62.15120 What information must I include in the plant-specific operating manual?

You must include 11 items in the operating manual for your plant:

(a) A summary of all applicable standards in this subpart.

(b) A description of the basic combustion principles that apply to municipal waste combustion units.

(c) Procedures for receiving, handling, and feeding municipal solid waste.

(d) Procedures to be followed during periods of startup, shutdown, and malfunction of the municipal waste combustion unit.

(e) Procedures for maintaining a proper level of combustion air supply.

(f) Procedures for operating the municipal waste combustion unit within the standards contained in this subpart.

(g) Procedures for responding to periodic upset or off-specification conditions.

(h) Procedures for minimizing carryover of particulate matter.

(i) Procedures for handling ash.

(j) Procedures for monitoring emissions from the municipal waste combustion unit.

(k) Procedures for recordkeeping and reporting.

§ 62.15125 Where must I keep the plant-specific operating manual?

You must keep your operating manual in an easily accessible location at your plant. It must be available for review or inspection by all employees who must review it and by the Administrator.

GOOD COMBUSTION PRACTICES: OPERATOR CERTIFICATION

§ 62.15130 What types of operator certification must the chief facility operator and shift supervisor obtain and by when must they obtain it?

(a) Each chief facility operator and shift supervisor must obtain and maintain a current provisional operator certification from either the American Society of Mechanical Engineers QRO–1–1994 or a State certification program in Connecticut and Maryland (if the affected facility is located in either of the respective States). If ASME certification is chosen, proceed in accordance with ASME QRO–1–1994. Standard for the Qualification and Certification of Resource Recovery Facility Operators. The Director of the Federal Register approves this incorporation by reference in accordance with 5 U.S.C.552(a) and 1 CFR part 51. You may obtain a copy from the American Society of Mechanical Engineers, Service Center, 22 Law Drive, Post Office Box 2900, Fairfield, NJ 07007. You may inspect a copy at the Office of Air Quality Planning and Standards Air Docket, EPA, 109 T.W. Alexander Drive, Room C521C, RTP, NC 27709 or at the Office of the Federal Register, 800 North Capitol Street, NW., Suite 700, Washington, DC.

(b) Each chief facility operator and shift supervisor must obtain a provisional certification by the later of three dates:

(1) For Class I units, 12 months after the effective date of this subpart. For Class II units, 18 months after the effective date of this subpart.

(2) Six months after the municipal waste combustion unit starts up.

(3) Six months after they transfer to the municipal waste combustion unit or 6 months after they are hired to work at the municipal waste combustion unit.

(c) Each chief facility operator and shift supervisor must take one of two actions:

(1) Obtain a full certification from the American Society of Mechanical Engineers.

(2) Schedule a full certification exam with the American Society of Mechanical Engineers (QRO–1–1994 (incorporated by reference in §60.17 of subpart A of 40 CFR part 60)).

(d) The chief facility operator and shift supervisor must obtain the full certification or be scheduled to take the certification exam by the later of the following dates:

(1) For Class I units, 12 months after the effective date of this subpart. For Class II units, 18 months after the effective date of this subpart.

(2) Six months after the municipal waste combustion unit starts up.

(3) Six months after they transfer to the municipal waste combustion unit or 6 months after they are hired to work at the municipal waste combustion unit.

§62.15135 After the required date for operator certification, who may operate the municipal waste combustion unit?

After the required date for full or provisional certification, you must not operate your municipal waste combustion unit unless one of four employees is on duty:

(a) A fully certified chief facility operator.

(b) A provisionally certified chief facility operator who is scheduled to take the full certification exam.

(c) A fully certified shift supervisor.

(d) A provisionally certified shift supervisor who is scheduled to take the full certification exam.

§62.15140 What if all the certified operators must be temporarily offsite?

If the certified chief facility operator and certified shift supervisor both are unavailable, a provisionally certified control room operator at the municipal waste combustion unit may fulfill the certified operator requirement. Depending on the length of time that a certified chief facility operator and certified shift supervisor is away, you must meet one of three criteria:

(a) When the certified chief facility operator and certified shift supervisor are both offsite for 12 hours or less and no other certified operator is onsite, the provisionally certified control room operator may perform those duties without notice to, or approval by, the Administrator.

(b) When the certified chief facility operator and certified shift supervisor are offsite for more than 12 hours, but for 2 weeks or less, and no other certified operator is onsite, the provisionally certified control room operator may perform those duties without notice to, or approval by, the Administrator. However, you must record the periods when the certified chief facility operator and certified shift supervisor are offsite and include this information in the annual report as specified under §62.15340(l).

(c) When the certified chief facility operator and certified shift supervisor are offsite for more than 2 weeks and no other certified operator is onsite, the provisionally certified control room operator may perform those duties without notice to, or approval by, the Administrator. However, you must take two actions:

(1) Notify the Administrator in writing. In the notice, state what caused the absence and what you are doing to ensure that a certified chief facility operator or certified shift supervisor is onsite.

(2) Submit a status report and corrective action summary to the Administrator every 4 weeks following the initial notification. If the Administrator notifies you that your status report or

corrective action summary is disapproved, the municipal waste combustion unit may continue operation for 90 days, but then must cease operation. If corrective actions are taken in the 90-day period such that the Administrator withdraws the disapproval, municipal waste combustion unit operation may continue.

GOOD COMBUSTION PRACTICES: OPERATING REQUIREMENTS

§ 62.15145 What are the operating practice requirements for my municipal waste combustion unit?

(a) You must not operate your municipal waste combustion unit at loads greater than 110 percent of the maximum demonstrated load of the municipal waste combustion unit (4-hour block average), as specified under ''Definitions'' (§ 62.15410).

(b) You must not operate your municipal waste combustion unit so that the temperature at the inlet of the particulate matter control device exceeds 17 °C above the maximum demonstrated temperature of the particulate matter control device (4-hour block average), as specified under ''Definitions'' (§ 62.15410).

(c) If your municipal waste combustion unit uses activated carbon to control dioxins/furans or mercury emissions, you must maintain an 8-hour block average carbon feed rate at or above the highest average level established during the most recent dioxins/furans or mercury test.

(d) If your municipal waste combustion unit uses activated carbon to control dioxins/furans or mercury emissions, you must evaluate total carbon usage for each calendar quarter. The total amount of carbon purchased and delivered to your municipal waste combustion plant must be at or above the required quarterly usage of carbon. At your option, you may choose to evaluate required quarterly carbon usage on a municipal waste combustion unit basis for each individual municipal waste combustion unit at your plant. Calculate the required quarterly usage of carbon using the appropriate equation in § 62.15390.

(e) Your municipal waste combustion unit is exempt from limits on load level, temperature at the inlet of the particulate matter control device, and carbon feed rate during any of five situations:

(1) During your annual tests for dioxins/furans.

(2) During your annual mercury tests (for carbon feed rate requirements only).

(3) During the 2 weeks preceding your annual tests for dioxins/furans.

(4) During the 2 weeks preceding your annual mercury tests (for carbon feed rate requirements only).

(5) Whenever the Administrator permits you to do any of five activities:

(i) Evaluate system performance.

(ii) Test new technology or control technologies.

(iii) Perform diagnostic testing.

(iv) Perform other activities to improve the performance of your municipal waste combustion unit.

(v) Perform other activities to advance the state of the art for emission controls for your municipal waste combustion unit.

§ 62.15150 What happens to the operating requirements during periods of startup, shutdown, and malfunction?

(a) The operating requirements of this subpart apply at all times except during periods of municipal waste combustion unit startup, shutdown, or malfunction.

(b) Each startup, shutdown, or malfunction must not last for longer than 3 hours.

EMISSION LIMITS

§ 62.15155 What pollutants are regulated by this subpart?

Eleven pollutants, in four groupings, are regulated:

(a) *Organics.* Dioxins/furans.

(b) *Metals.*

(1) Cadmium.

(2) Lead.

(3) Mercury.

(4) Opacity.

(5) Particulate matter.

(c) *Acid gases.*

(1) Hydrogen chloride.

(2) Nitrogen oxides.

(3) Sulfur dioxide.

(d) *Other.*

(1) Carbon monoxide.

(2) Fugitive ash.

§62.15160 What emission limits must I meet?

(a) After the date the initial stack test and continuous emission monitoring system evaluation are required or completed (whichever is earlier), you must meet the applicable emission limits specified in the four tables of this section:

(1) For Class I units, see tables 2 and 3 of this subpart.

(2) For Class II units, see table 4 of this subpart.

(3) For carbon monoxide emission limits for both classes of units, see table 5 of this subpart.

(b) If your Class I municipal waste combustion unit began construction, reconstruction, or modification after June 26, 1987, then you must comply with the dioxins/furans and mercury emission limits specified in table 2 of this subpart as applicable by the later of the following two dates:

(1) One year after the effective date of this subpart.

(2) One year after the issuance of a revised construction or operating permit, if a permit modification is required. Final compliance with the dioxins/furans limits must be achieved no later than November 6, 2005, even if the date one year after the issuance of a revised construction or operating permit is later than November 6, 2005.

§62.15165 What happens to the emission limits during periods of startup, shutdown, and malfunction?

(a) The emission limits of this subpart apply at all times except during periods of municipal waste combustion unit startup, shutdown, or malfunction.

(b) Each startup, shutdown, or malfunction must not last for longer than 3 hours.

(c) A maximum of 3 hours of test data can be dismissed from compliance calculations during periods of startup, shutdown, or malfunction.

(d) During startup, shutdown, or malfunction periods longer than 3 hours, emissions data cannot be discarded from compliance calculations and all provisions under §60.11(d) of subpart A of 40 CFR part 60 apply.

CONTINUOUS EMISSION MONITORING

§62.15170 What types of continuous emission monitoring must I perform?

To continuously monitor emissions, you must perform four tasks:

(a) Install continuous emission monitoring systems for certain gaseous pollutants.

(b) Make sure your continuous emission monitoring systems are operating correctly.

(c) Make sure you obtain the minimum amount of monitoring data.

(d) Install a continuous opacity monitoring system.

§62.15175 What continuous emission monitoring systems must I install for gaseous pollutants?

(a) You must install, calibrate, maintain, and operate continuous emission monitoring systems for oxygen (or carbon dioxide), sulfur dioxide, and carbon monoxide. If you operate a Class I municipal waste combustion unit, also install, calibrate, maintain, and operate a continuous emission monitoring system for nitrogen oxides. Install the continuous emission monitoring system for sulfur dioxide, nitrogen oxides, and oxygen (or carbon dioxide) at the outlet of the air pollution control device.

(b) You must install, evaluate, and operate each continuous emission monitoring system according to the ''Monitoring Requirements'' in §60.13 of subpart A of 40 CFR part 60.

(c) You must monitor the oxygen (or carbon dioxide) concentration at each location where you monitor sulfur dioxide and carbon monoxide. Additionally, if you operate a Class I municipal waste combustion unit, you must also monitor the oxygen (or carbon dioxide) concentration at the location where you monitor nitrogen oxides.

(d) You may choose to monitor carbon dioxide instead of oxygen as a diluent gas. If you choose to monitor carbon dioxide, then an oxygen monitor is not required and you must follow the requirements in §62.15200.

(e) If you choose to demonstrate compliance by monitoring the percent reduction of sulfur dioxide, you must also install a continuous emission

monitoring system for sulfur dioxide and oxygen (or carbon dioxide) at the inlet of the air pollution control device.

(f) If you prefer to use an alternative sulfur dioxide monitoring method, such as parametric monitoring, or cannot monitor emissions at the inlet of the air pollution control device to determine percent reduction, you can apply to the Administrator for approval to use an alternative monitoring method under §60.13(i) of subpart A of 40 CFR part 60.

§ 62.15180 How are the data from the continuous emission monitoring systems used?

You must use data from the continuous emission monitoring systems for sulfur dioxide, nitrogen oxides, and carbon monoxide to demonstrate continuous compliance with the applicable emission limits specified in tables 2, 3, 4, and 5 of this subpart. To demonstrate compliance for dioxins/furans, cadmium, lead, mercury, particulate matter, opacity, hydrogen chloride, and fugitive ash, see §62.15235.

§ 62.15185 How do I make sure my continuous emission monitoring systems are operating correctly?

(a) Conduct initial, daily, quarterly, and annual evaluations of your continuous emission monitoring systems that measure oxygen (or carbon dioxide), sulfur dioxide, nitrogen oxides (Class I municipal waste combustion units only), and carbon monoxide.

(b) Complete your initial evaluation of the continuous emission monitoring systems within 180 days after your final compliance date.

(c) For initial and annual evaluations, collect data concurrently (or within 30 to 60 minutes) using your oxygen (or carbon dioxide) continuous emission monitoring system, your sulfur dioxide, nitrogen oxides, or carbon monoxide continuous emission monitoring systems, as appropriate, and the appropriate test methods specified in table 6 of this subpart. Collect these data during each initial and annual evaluation of your continuous emission monitoring systems following the applicable performance specifications in appendix B of 40 CFR part 60. Table 7 of this subpart shows the performance specifications that apply to each continuous emission monitoring system.

(d) Follow the quality assurance procedures in Procedure 1 of appendix F of 40 CFR part 60 for each continuous emission monitoring system. These procedures include daily calibration drift and quarterly accuracy determinations.

§ 62.15190 Am I exempt from any 40 CFR part 60 appendix B or appendix F requirements to evaluate continuous emission monitoring systems?

Yes, the accuracy tests for your sulfur dioxide continuous emission monitoring system require you to also evaluate your oxygen (or carbon dioxide) continuous emission monitoring system. Therefore, your oxygen (or carbon dioxide) continuous emission monitoring system is exempt from two requirements:

(a) Section 2.3 of Performance Specification 3 in appendix B of 40 CFR part 60 (relative accuracy requirement).

(b) Section 5.1.1 of appendix F of 40 CFR part 60 (relative accuracy test audit).

§ 62.15195 What is my schedule for evaluating continuous emission monitoring systems?

(a) Conduct annual evaluations of your continuous emission monitoring systems no more than 13 months after the previous evaluation was conducted.

(b) Evaluate your continuous emission monitoring systems daily and quarterly as specified in appendix F of 40 CFR part 60.

§ 62.15200 What must I do if I choose to monitor carbon dioxide instead of oxygen as a diluent gas?

You must establish the relationship between oxygen and carbon dioxide during the initial evaluation of your continuous emission monitoring system. You may reestablish the relationship during annual evaluations. To establish the relationship use three procedures:

(a) Use EPA Reference Method 3A or 3B in Appendix A of 40 CFR part 60 to determine oxygen concentration at the location of your carbon dioxide monitor.

(b) Conduct at least three test runs for oxygen. Make sure each test run represents a 1-hour average and that sampling continues for at least 30 minutes in each hour.

(c) Use the fuel-factor equation in EPA Reference Method 3B to determine the relationship between oxygen and carbon dioxide.

§62.15205 What minimum amount of monitoring data must I collect with my continuous emission monitoring systems and is this requirement enforceable?

(a) Where continuous emission monitoring systems are required, obtain 1-hour arithmetic averages. Make sure the averages for sulfur dioxide, nitrogen oxides (Class I municipal waste combustion units only), and carbon monoxide are in parts per million by dry volume at 7 percent oxygen (or the equivalent carbon dioxide level). Use the 1-hour averages of oxygen (or carbon dioxide) data from your continuous emission monitoring system to determine the actual oxygen (or carbon dioxide) level and to calculate emissions at 7 percent oxygen (or the equivalent carbon dioxide level).

(b) Obtain at least two data points per hour in order to calculate a valid 1-hour arithmetic average. Section 60.13(e)(2) of subpart A of 40 CFR part 60 requires your continuous emission monitoring systems to complete at least one cycle of operation (sampling, analyzing, and data recording) for each 15-minute period.

(c) Obtain valid 1-hour averages for 75 percent of the operating hours per day for 90 percent of the operating days per calendar quarter. An operating day is any day the unit combusts any municipal solid waste or refuse-derived fuel.

(d) If you do not obtain the minimum data required in paragraphs (a) through (c) of this section, you are in violation of this data collection requirement regardless of the emission level monitored, and you must notify the Administrator according to §62.15340(e).

(e) If you do not obtain the minimum data required in paragraphs (a) through (c) of this section, you must still use all valid data from the continuous emission monitoring systems in calculating emission concentrations and percent reductions in accordance with §62.15210.

§62.15210 How do I convert my 1-hour arithmetic averages into appropriate averaging times and units?

(a) Use the equation in §62.15390(a) to calculate emissions at 7 percent oxygen.

(b) Use EPA Reference Method 19 in Appendix A of 40 CFR part 60, section 4.3, to calculate the daily geometric average concentrations of sulfur dioxide emissions. If you are monitoring the percent reduction of sulfur dioxide, use EPA Reference Method 19, section 5.4, to determine the daily geometric average percent reduction of potential sulfur dioxide emissions.

(c) If you operate a Class I municipal waste combustion unit, use EPA Reference Method 19, section 4.1, to calculate the daily arithmetic average for concentrations of nitrogen oxides.

(d) Use EPA Reference Method 19, section 4.1, to calculate the 4-hour or 24-hour daily block averages (as applicable) for concentrations of carbon monoxide.

§62.15215 What is required for my continuous opacity monitoring system and how are the data used?

(a) Install, calibrate, maintain, and operate a continuous opacity monitoring system.

(b) Install, evaluate, and operate each continuous opacity monitoring system according to §60.13 of subpart A 40 CFR part 60.

(c) Complete an initial evaluation of your continuous opacity monitoring system according to Performance Specification 1 in appendix B of 40 CFR part 60. Complete this evaluation by 180 days after your final compliance date.

(d) Complete each annual evaluation of your continuous opacity monitoring system no more than 13 months after the previous evaluation.

(e) Use tests conducted according to EPA Reference Method 9, as specified in §62.15245, to determine compliance with the applicable opacity limit in tables 2 or 4 of this subpart. The data obtained from your continuous opacity monitoring system are not used to determine compliance with the opacity limit.

§ 62.15220 What additional requirements must I meet for the operation of my continuous emission monitoring systems and continuous opacity monitoring system?

Use the required span values and applicable performance specifications in table 8 of this subpart.

§ 62.15225 What must I do if my continuous emission monitoring system is temporarily unavailable to meet the data collection requirements?

Refer to table 8 of this subpart. It shows alternate methods for collecting data when these systems malfunction or when repairs, calibration checks, or zero and span checks keep you from collecting the minimum amount of data.

STACK TESTING

§ 62.15230 What types of stack tests must I conduct?

Conduct initial and annual stack tests to measure the emission levels of dioxins/furans, cadmium, lead, mercury, particulate matter, opacity, hydrogen chloride, and fugitive ash.

§ 62.15235 How are the stack test data used?

You must use results of stack tests for dioxins/furans, cadmium, lead, mercury, particulate matter, opacity, hydrogen chloride, and fugitive ash to demonstrate compliance with the applicable emission limits in tables 2 and 4 of this subpart. To demonstrate compliance for carbon monoxide, nitrogen oxides, and sulfur dioxide, see § 62.15180.

§ 62.15240 What schedule must I follow for the stack testing?

(a) Conduct initial stack tests for the pollutants listed in § 62.15230 by 180 days after your final compliance date.

(b) Conduct annual stack tests for these pollutants after the initial stack test. Conduct each annual stack test no later than 13 months after the previous stack test.

§ 62.15245 What test methods must I use to stack test?

(a) Follow table 8 of this subpart to establish the sampling location and to determine pollutant concentrations, number of traverse points, individual test methods, and other specific testing requirements for the different pollutants.

(b) Make sure that stack tests for all these pollutants consist of at least three test runs, as specified in § 60.8 (Performance Tests) of subpart A of 40 CFR part 60. Use the average of the pollutant emission concentrations from the three test runs to determine compliance with the applicable emission limits in tables 2 and 4 of this subpart.

(c) Obtain an oxygen (or carbon dioxide) measurement at the same time as your pollutant measurements to determine diluent gas levels, as specified in § 62.15175.

(d) Use the equations in § 62.15390(a) to calculate emission levels at 7 percent oxygen (or an equivalent carbon dioxide basis), the percent reduction in potential hydrogen chloride emissions, and the reduction efficiency for mercury emissions. See the individual test methods in table 6 of this subpart for other required equations.

(e) You can apply to the Administrator for approval under § 60.8(b) of subpart A of 40 CFR part 60 to

(1) Use a reference method with minor changes in methodology;

(2) Use an equivalent method;

(3) Use an alternative method the results of which the Administrator has determined are adequate for demonstrating compliance;

(4) Waive the requirement for a performance test because you have demonstrated by other means that you are in compliance; or

(5) Use a shorter sampling time or smaller sampling volume.

§ 62.15250 May I conduct stack testing less often?

(a) You may test less often if you own or operate a Class II municipal waste combustion unit and if all stack tests for a given pollutant over 3 consecutive years show you comply with the emission limit. In this case, you are not required to conduct a stack test for that pollutant for the next 2 years. However, you must conduct another stack test within 36 months of the anniversary date of the third consecutive stack test that shows you

comply with the emission limit. Thereafter, you must perform stack tests every third year but no later than 36 months following the previous stack tests. If a stack test shows noncompliance with an emission limit, you must conduct annual stack tests for that pollutant until all stack tests over 3 consecutive years show compliance with the emission limit for that pollutant. This provision applies to all pollutants subject to stack testing requirements: dioxins/furans, cadmium, lead, mercury, particulate matter, opacity, hydrogen chloride, and fugitive ash.

(b) You can test less often for dioxins/furans emissions if you own or operate a municipal waste combustion plant that meets two conditions. First, you have multiple municipal waste combustion units onsite that are subject to this subpart. Second, all these municipal waste combustion units have demonstrated levels of dioxins/furans emissions less than or equal to 15 nanograms per dry standard cubic meter (total mass) for Class I units, or 30 nanograms per dry standard cubic meter (total mass) for Class II units, for 2 consecutive years. In this case, you may choose to conduct annual stack tests on only one municipal waste combustion unit per year at your plant. This provision only applies to stack testing for dioxins/furans emissions.

(1) Conduct the stack test no more than 13 months following a stack test on any municipal waste combustion unit subject to this subpart at your plant. Each year, test a different municipal waste combustion unit subject to this subpart and test all municipal waste combustion units subject to this subpart in a sequence that you determine. Once you determine a testing sequence, it must not be changed without approval by the Administrator.

(2) If each annual stack test shows levels of dioxins/furans emissions less than or equal to 15 nanograms per dry standard cubic meter (total mass) for Class I units, or 30 nanograms per dry standard cubic meter (total mass) for Class II units, you may continue stack tests on only one municipal waste combustion unit subject to this subpart per year.

(3) If any annual stack test indicates levels of dioxins/furans emissions greater than 15 nanograms per dry standard cubic meter (total mass) for Class I units, or 30 nanograms per dry standard cubic meter (total mass) for Class II units, conduct subsequent annual stack tests on all municipal waste combustion units subject to this subpart at your plant. You may return to testing one municipal waste combustion unit subject to this subpart per year if you can demonstrate dioxins/furans emission levels less than or equal to 15 nanograms per dry standard cubic meter (total mass) for Class I units, or 30 nanograms per dry standard cubic meter (total mass) for Class II units, for all municipal waste combustion units at your plant subject to this subpart for 2 consecutive years.

§ 62.15255 May I deviate from the 13-month testing schedule if unforeseen circumstances arise?

You may not deviate from the 13-month testing schedules specified in §§ 62.15240(b) and 62.15250(b)(1) unless you apply to the Administrator for an alternative schedule, and the Administrator approves your request for alternate scheduling prior to the date on which you would otherwise have been required to conduct the next stack test.

OTHER MONITORING REQUIREMENTS

§ 62.15260 What other requirements must I meet for continuous monitoring?

You must also monitor three operating parameters:

(a) Load level of each municipal waste combustion unit.

(b) Temperature of flue gases at the inlet of your particulate matter air pollution control device.

(c) Carbon feed rate if activated carbon is used to control dioxins/furans or mercury emissions.

§ 62.15265 How do I monitor the load of my municipal waste combustion unit?

(a) If your municipal waste combustion unit generates steam, you must install, calibrate, maintain, and operate a steam flowmeter or a feed water flowmeter and meet five requirements:

(1) Continuously measure and record the measurements of steam (or feed water) in kilograms per hour (or pounds per hour).

(2) Calculate your steam (or feed water) flow in 4-hour block averages.

(3) Calculate the steam (or feed water) flow rate using the method in ''American Society of Mechanical Engineers (ASME PTC 4.1—1964): Test Code for Steam Generating Units, Power Test Code 4.1–1964 (Reaffirmed 1991),'' section 4. The Director of the Federal Register approves this incorporation by reference in accordance with 5 U.S.C. 552(a) and 1 CFR part 51. You may obtain a copy from the American Society of Mechanical Engineers, Service Center, 22 Law Drive, Post Office Box 2900, Fairfield, NJ 07007. You may inspect a copy at the Office of Air Quality Planning and Standards Air Docket, EPA, 109 T.W. Alexander Drive, Room C521C, RTP, NC 27709 or at the Office of the Federal Register, 800 North Capitol Street, NW., Suite 700, Washington, DC.

(4) Design, construct, install, calibrate, and use nozzles or orifices for flow rate measurements, using the recommendations in ''American Society of Mechanical Engineers Interim Supplement 19.5 on Instruments and Apparatus: Application, Part II of Fluid Meters'', 6th Edition (1971), chapter 4. The Director of the Federal Register approves this incorporation by reference in accordance with 5 U.S.C. 552(a) and 1 CFR part 51. You may obtain a copy from the American Society of Mechanical Engineers, Service Center, 22 Law Drive, Post Office Box 2900, Fairfield, NJ 07007. You may inspect a copy at the Office of Air Quality Planning and Standards Air Docket, EPA, 109 T.W. Alexander Drive, Room C521C, RTP, NC 27709 or at the Office of the Federal Register, 800 North Capitol Street, NW., Suite 700, Washington, DC.

(5) Before each dioxins/furans stack test, or at least once a year, calibrate all signal conversion elements associated with steam (or feed water) flow measurements according to the manufacturer instructions.

(b) If your municipal waste combustion unit does not generate steam, or, if your municipal waste combustion units have shared steam systems and steam load cannot be estimated per unit, you must determine, to the satisfaction of the Administrator, one or more operating parameters that can be used to continuously estimate load level (for example, the feed rate of municipal solid waste or refuse-derived fuel). You must continuously monitor the selected parameters.

§ 62.15270 How do I monitor the temperature of flue gases at the inlet of my particulate matter control device?

You must install, calibrate, maintain, and operate a device to continuously measure the temperature of the flue gas stream at the inlet of each particulate matter control device.

§ 62.15275 How do I monitor the injection rate of activated carbon?

If your municipal waste combustion unit uses activated carbon to control dioxins/furans or mercury emissions, you must meet three requirements:

(a) Select a carbon injection system operating parameter that can be used to calculate carbon feed rate (for example, screw feeder speed).

(b) During each dioxins/furans and mercury stack test, determine the average carbon feed rate in kilograms (or pounds) per hour. Also, determine the average operating parameter level that correlates to the carbon feed rate. Establish a relationship between the operating parameter and the carbon feed rate in order to calculate the carbon feed rate based on the operating parameter level.

(c) Continuously monitor the selected operating parameter during all periods when the municipal waste combustion unit is operating and combusting waste and calculate the 8-hour block average carbon feed rate in kilograms (or pounds) per hour, based on the selected operating parameter. When calculating the 8-hour block average, do two things:

(1) Exclude hours when the municipal waste combustion unit is not operating.

(2) Include hours when the municipal waste combustion unit is operating but the carbon feed system is not working correctly.

§62.15280 What minimum amount of monitoring data must I collect with my continuous parameter monitoring systems and is this requirement enforceable?

(a) Where continuous parameter monitoring systems are used, obtain 1-hour arithmetic averages for three parameters:

(1) Load level of the municipal waste combustion unit.

(2) Temperature of the flue gases at the inlet of your particulate matter control device.

(3) Carbon feed rate if activated carbon is used to control dioxins/furans or mercury emissions.

(b) Obtain at least two data points per hour in order to calculate a valid 1-hour arithmetic average.

(c) Obtain valid 1-hour averages for at least 75 percent of the operating hours per day for 90 percent of the operating days per calendar quarter. An operating day is any day the unit combusts any municipal solid waste or refuse-derived fuel.

(d) If you do not obtain the minimum data required in paragraphs (a) through (c) of this section, you are in violation of this data collection requirement and you must notify the Administrator according to §62.15340(e).

RECORDKEEPING

§62.15285 What records must I keep?

You must keep four types of records:

(a) Operator training and certification.

(b) Stack tests.

(c) Continuously monitored pollutants and parameters.

(d) Carbon feed rate.

§62.15290 Where must I keep my records and for how long?

(a) Keep all records onsite in paper copy or electronic format unless the Administrator approves another format.

(b) Keep all records on each municipal waste combustion unit for at least 5 years.

(c) Make all records available for submittal to the Administrator, or for onsite review by an inspector.

§62.15295 What records must I keep for operator training and certification?

You must keep records of six items:

(a) *Records of provisional certifications.* Include three items:

(1) For your municipal waste combustion plant, names of the chief facility operator, shift supervisors, and control room operators who are provisionally certified by the American Society of Mechanical Engineers.

(2) Dates of the initial provisional certifications.

(3) Documentation showing current provisional certifications.

(b) *Records of full certifications.* Include three items:

(1) For your municipal waste combustion plant, names of the chief facility operator, shift supervisors, and control room operators who are fully certified by the American Society of Mechanical Engineers or an equivalent State-approved certification program.

(2) Dates of initial and renewal full certifications.

(3) Documentation showing current full certifications.

(c) *Records showing completion of the operator training course.* Include three items:

(1) For your municipal waste combustion plant, names of the chief facility operator, shift supervisors, and control room operators who have completed the EPA or State municipal waste combustion operator training course.

(2) Dates of completion of the operator training course.

(3) Documentation showing completion of operator training course.

(d) *Records of reviews for plant-specific operating manuals.* Include three items:

(1) Names of persons who have reviewed the operating manual.

(2) Date of the initial review.

(3) Dates of subsequent annual reviews.

(e) *Records of when a certified operator is temporarily offsite.* Include two main items:

(1) If the certified chief facility operator and certified shift supervisor are offsite for more than 12 hours but for 2 weeks or less and no other certified operator is onsite, record the dates that the certified chief facility operator and certified shift supervisor were offsite.

(2) When all certified chief facility operators and certified shift supervisors are offsite for more than 2 weeks and no other certified operator is onsite, keep records of four items:

(i) Your notice that all certified persons are offsite.

(ii) The conditions that cause these people to be offsite.

(iii) The corrective actions you are taking to ensure a certified chief facility operator or certified shift supervisor is onsite.

(iv) Copies of the written reports submitted every 4 weeks that summarize the actions taken to ensure that a certified chief facility operator or certified shift supervisor will be onsite.

(f) *Records of calendar dates.* Include the calendar date on each record.

§ 62.15300 What records must I keep for stack tests?

For stack tests required under § 62.15230, you must keep records of four items:

(a) The results of the stack tests for eight pollutants or parameters recorded in the appropriate units of measure specified in tables 2 or 4 of this subpart:

(1) Dioxins/furans.

(2) Cadmium.

(3) Lead.

(4) Mercury.

(5) Opacity.

(6) Particulate matter.

(7) Hydrogen chloride.

(8) Fugitive ash.

(b) Test reports including supporting calculations that document the results of all stack tests.

(c) The maximum demonstrated load of your municipal waste combustion units and maximum temperature at the inlet of your particulate matter control device during all stack tests for dioxins/furans emissions.

(d) The calendar date of each record.

§ 62.15305 What records must I keep for continuously monitored pollutants or parameters?

You must keep records of eight items.

(a) *Records of monitoring data.* Document six parameters measured using continuous monitoring systems:

(1) All 6-minute average levels of opacity.

(2) All 1-hour average concentrations of sulfur dioxide emissions.

(3) For Class I municipal waste combustion units only, all 1-hour average concentrations of nitrogen oxides emissions.

(4) All 1-hour average concentrations of carbon monoxide emissions.

(5) All 1-hour average load levels of your municipal waste combustion unit.

(6) All 1-hour average flue gas temperatures at the inlet of the particulate matter control device.

(b) *Records of average concentrations and percent reductions.* Document five parameters:

(1) All 24-hour daily block geometric average concentrations of sulfur dioxide emissions or average percent reductions of sulfur dioxide emissions.

(2) For Class I municipal waste combustion units only, all 24-hour daily arithmetic average concentrations of nitrogen oxides emissions.

(3) All 4-hour block or 24-hour daily block arithmetic average concentrations of carbon monoxide emissions.

(4) All 4-hour block arithmetic average load levels of your municipal waste combustion unit.

(5) All 4-hour block arithmetic average flue gas temperatures at the inlet of the particulate matter control device.

(c) *Records of exceedances.* Document three items:

(1) Calendar dates whenever any of the five pollutants or parameter levels recorded in paragraph (b) of this section or the opacity level recorded in paragraph (a)(1) of this section did not meet the emission limits or operating levels specified in this subpart.

(2) Reasons you exceeded the applicable emission limits or operating levels.

(3) Corrective actions you took, or are taking, to meet the emission limits or operating levels.

(d) *Records of minimum data.* Document three items:

(1) Calendar dates for which you did not collect the minimum amount of data required under §§ 62.15205 and 62.15280. Record these dates for five types of pollutants and parameters:

(i) Sulfur dioxide emissions.

(ii) For Class I municipal waste combustion units only, nitrogen oxides emissions.

(iii) Carbon monoxide emissions.

(iv) Load levels of your municipal waste combustion unit.

(v) Temperatures of the flue gases at the inlet of the particulate matter control device.

(2) Reasons you did not collect the minimum data.

(3) Corrective actions you took or are taking to obtain the required amount of data.

(e) *Records of exclusions.* Document each time you have excluded data from your calculation of averages for any of the following five pollutants or parameters and the reasons the data were excluded:

(1) Sulfur dioxide emissions.

(2) For Class I municipal waste combustion units only, nitrogen oxides emissions.

(3) Carbon monoxide emissions.

(4) Load levels of your municipal waste combustion unit.

(5) Temperatures of the flue gases at the inlet of the particulate matter control device.

(f) *Records of drift and accuracy.* Document the results of your daily drift tests and quarterly accuracy determinations according to Procedure 1 of appendix F of 40 CFR part 60. Keep these records for the sulfur dioxide, nitrogen oxides (Class I municipal waste combustion units only), and carbon monoxide continuous emissions monitoring systems.

(g) *Records of the relationship between oxygen and carbon dioxide.* If you choose to monitor carbon dioxide instead of oxygen as a diluent gas, document the relationship between oxygen and carbon dioxide, as specified in §62.15200.

(h) *Records of calendar dates.* Include the calendar date on each record.

§62.15310 What records must I keep for municipal waste combustion units that use activated carbon?

For municipal waste combustion units that use activated carbon to control dioxins/furans or mercury emissions, you must keep records of five items:

(a) *Records of average carbon feed rate.* Document five items:

(1) Average carbon feed rate (in kilograms or pounds per hour) during all stack tests for dioxins/furans and mercury emissions. Include supporting calculations in the records.

(2) For the operating parameter chosen to monitor carbon feed rate, average operating level during all stack tests for dioxins/furans and mercury emissions. Include supporting data that document the relationship between the operating parameter and the carbon feed rate.

(3) All 8-hour block average carbon feed rates in kilograms (pounds) per hour calculated from the monitored operating parameter.

(4) Total carbon purchased and delivered to the municipal waste combustion plant for each calendar quarter. If you choose to evaluate total carbon purchased and delivered on a municipal waste combustion unit basis, record the total carbon purchased and delivered for each individual municipal waste combustion unit at your plant. Include supporting documentation.

(5) Required quarterly usage of carbon for the municipal waste combustion plant, calculated using the appropriate equation in §62.15390(f). If you choose to evaluate required quarterly usage for carbon on a municipal waste combustion unit basis, record the required quarterly usage for each municipal waste combustion unit at your plant. Include supporting calculations.

(b) *Records of low carbon feed rates.* Document three items:

(1) The calendar dates when the average carbon feed rate over an 8-hour block was less than the average carbon feed rates determined during the most recent stack test for dioxins/furans or mercury emissions (whichever has a higher feed rate).

(2) Reasons for the low carbon feed rates.

(3) Corrective actions you took or are taking to meet the 8-hour average carbon feed rate requirement.

(c) *Records of minimum carbon feed rate data.* Document three items:

(1) Calendar dates for which you did not collect the minimum amount of carbon feed rate data required under §62.15280.

(2) Reasons you did not collect the minimum data.

(3) Corrective actions you took or are taking to get the required amount of data.

(d) *Records of exclusions.* Document each time you have excluded data from your calculation of average carbon feed rates and the reasons the data were excluded.

(e) *Records of calendar dates.* Include the calendar date on each record.

REPORTING

§ 62.15315 What reports must I submit and in what form?

(a) Submit an initial report and annual reports, plus semiannual reports for any emission or parameter level that does not meet the limits specified in this subpart.

(b) Submit all reports on paper, postmarked on or before the submittal dates in §§ 62.15325, 62.15335, and 62.15350. If the Administrator agrees, you may submit electronic reports.

(c) Keep a copy of all reports required by §§ 62.15330, 62.15340, and 62.15355 onsite for 5 years.

§ 62.15320 What are the appropriate units of measurement for reporting my data?

See tables 2, 3, 4, and 5 of this subpart for appropriate units of measurement.

§ 62.15325 When must I submit the initial report?

As specified in § 60.7(c) of subpart A of 40 CFR part 60, submit your initial report within 180 days after your final compliance date.

§ 62.15330 What must I include in the initial report?

You must include seven items:

(a) The emission levels measured on the date of the initial evaluation of your continuous emission monitoring systems for all of the following five pollutants or parameters as recorded in accordance with § 62.15305(b).

(1) The 24-hour daily geometric average concentration of sulfur dioxide emissions or the 24-hour daily geometric percent reduction of sulfur dioxide emissions.

(2) For Class I municipal waste combustion units only, the 24-hour daily arithmetic average concentration of nitrogen oxides emissions.

(3) The 4-hour block or 24-hour daily arithmetic average concentration of carbon monoxide emissions.

(4) The 4-hour block arithmetic average load level of your municipal waste combustion unit.

(5) The 4-hour block arithmetic average flue gas temperature at the inlet of the particulate matter control device.

(b) The results of the initial stack tests for eight pollutants or parameters (use appropriate units as specified in tables 2 or 4 of this subpart):

(1) Dioxins/furans.
(2) Cadmium.
(3) Lead.
(4) Mercury.
(5) Opacity.
(6) Particulate matter.
(7) Hydrogen chloride.
(8) Fugitive ash.

(c) The test report that documents the initial stack tests including supporting calculations.

(d) The initial performance evaluation of your continuous emissions monitoring systems. Use the applicable performance specifications in appendix B of 40 CFR part 60 in conducting the evaluation.

(e) The maximum demonstrated load of your municipal waste combustion unit and the maximum demonstrated temperature of the flue gases at the inlet of the particulate matter control device. Use values established during your initial stack test for dioxins/furans emissions and include supporting calculations.

(f) If your municipal waste combustion unit uses activated carbon to control dioxins/furans or mercury emissions, the average carbon feed rates that you recorded during the initial stack tests for dioxins/furans and mercury emissions. Include supporting calculations as specified in § 62.15310(a)(1) and (2).

(g) If you choose to monitor carbon dioxide instead of oxygen as a diluent gas, documentation of the relationship between oxygen and carbon dioxide, as specified in § 62.15200.

§ 62.15335 When must I submit the annual report?

Submit the annual report no later than February 1 of each year that follows the calendar year in which you collected the data. (As with all other requirements in this subpart, the requirement to submit an annual report

does not modify or replace the operating permits requirements of 40 CFR parts 70 and 71.)

§62.15340 What must I include in the annual report?

Summarize data collected for all pollutants and parameters regulated under this subpart. Your summary must include 12 items:

(a) The results of the annual stack test, using appropriate units, for eight pollutants, as recorded under §62.15300(a):

(1) Dioxins/furans.

(2) Cadmium.

(3) Lead.

(4) Mercury.

(5) Opacity.

(6) Particulate matter.

(7) Hydrogen chloride.

(8) Fugitive ash.

(b) A list of the highest average emission levels recorded, in the appropriate units. List these values for five pollutants or parameters:

(1) Sulfur dioxide emissions.

(2) For Class I municipal waste combustion units only, nitrogen oxides emissions.

(3) Carbon monoxide emissions.

(4) Load level of the municipal waste combustion unit.

(5) Temperature of the flue gases at the inlet of the particulate matter air pollution control device (4-hour block average).

(c) The highest 6-minute opacity level measured. Base this value on all 6-minute average opacity levels recorded by your continuous opacity monitoring system (§62.15305(a)(1)).

(d) For municipal waste combustion units that use activated carbon for controlling dioxins/furans or mercury emissions, include four records:

(1) The average carbon feed rates recorded during the most recent dioxins/furans and mercury stack tests.

(2) The lowest 8-hour block average carbon feed rate recorded during the year.

(3) The total carbon purchased and delivered to the municipal waste combustion plant for each calendar quarter. If you choose to evaluate total carbon purchased and delivered on a municipal waste combustion unit basis, record the total carbon purchased and delivered for each individual municipal waste combustion unit at your plant.

(4) The required quarterly carbon usage of your municipal waste combustion plant calculated using the appropriate equation in §62.15390(f). If you choose to evaluate required quarterly usage for carbon on a municipal waste combustion unit basis, record the required quarterly usage for each municipal waste combustion unit at your plant.

(e) The total number of days that you did not obtain the minimum number of hours of data for six pollutants or parameters. Include the reasons you did not obtain the data and corrective actions that you have taken to obtain the data in the future. Include data on:

(1) Sulfur dioxide emissions.

(2) For Class I municipal waste combustion units only, nitrogen oxides emissions.

(3) Carbon monoxide emissions.

(4) Load level of the municipal waste combustion unit.

(5) Temperature of the flue gases at the inlet of the particulate matter air pollution control device.

(6) Carbon feed rate.

(f) The number of hours you have excluded data from the calculation of average levels (include the reasons for excluding it). Include data for six pollutants or parameters:

(1) Sulfur dioxide emissions.

(2) For Class I municipal waste combustion units only, nitrogen oxides emissions.

(3) Carbon monoxide emissions.

(4) Load level of the municipal waste combustion unit.

(5) Temperature of the flue gases at the inlet of the particulate matter air pollution control device.

(6) Carbon feed rate.

(g) A notice of your intent to begin a reduced stack testing schedule for dioxins/furans emissions during the following calendar year if you are eligible for alternative scheduling (§62.15250(a) or (b)).

(h) A notice of your intent to begin a reduced stack testing schedule for other pollutants during the following calendar year if you are eligible for alternative scheduling (§62.15250(a)).

(i) A summary of any emission or parameter level that did not meet the limits specified in this subpart.

(j) A summary of the data in paragraphs (a) through (d) of this section from the year preceding the reporting year. This summary gives the Administrator a summary of the performance of the municipal waste combustion unit over a 2-year period.

(k) If you choose to monitor carbon dioxide instead of oxygen as a diluent gas, documentation of the relationship between oxygen and carbon dioxide, as specified in § 62.15200.

(l) Documentation of periods when all certified chief facility operators and certified shift supervisors are offsite for more than 12 hours.

§ 62.15345 What must I do if I am out of compliance with these standards?

You must submit a semiannual report on any recorded emission or parameter level that does not meet the requirements specified in this subpart.

§ 62.15350 If a semiannual report is required, when must I submit it?

(a) For data collected during the first half of a calendar year, submit your semiannual report by August 1 of that year.

(b) For data you collected during the second half of the calendar year, submit your semiannual report by February 1 of the following year.

§ 62.15355 What must I include in the semiannual out-of-compliance reports?

You must include three items in the semiannual report:

(a) For any of the following six pollutants or parameters that exceeded the limits specified in this subpart, include the calendar date they exceeded the limits, the averaged and recorded data for that date, the reasons for exceeding the limits, and your corrective actions:

(1) Concentration or percent reduction of sulfur dioxide emissions.

(2) For Class I municipal waste combustion units only, concentration of nitrogen oxides emissions.

(3) Concentration of carbon monoxide emissions.

(4) Load level of your municipal waste combustion unit.

(5) Temperature of the flue gases at the inlet of your particulate matter air pollution control device.

(6) Average 6-minute opacity level. The data obtained from your continuous opacity monitoring system are not used to determine compliance with the limit on opacity emissions.

(b) If the results of your annual stack tests (as recorded in § 62.15300(a)) show emissions above the limits specified in table 2 or 4 of this subpart as applicable for dioxins/furans, cadmium, lead, mercury, particulate matter, opacity, hydrogen chloride, and fugitive ash, include a copy of the test report that documents the emission levels and your corrective actions.

(c) For municipal waste combustion units that apply activated carbon to control dioxins/furans or mercury emissions, include two items:

(1) Documentation of all dates when the 8-hour block average carbon feed rate (calculated from the carbon injection system operating parameter) is less than the highest carbon feed rate established during the most recent mercury and dioxins/furans stack test (as specified in § 62.15310(a)(1)). Include four items:

(i) Eight-hour average carbon feed rate.

(ii) Reasons for these occurrences of low carbon feed rates.

(iii) The corrective actions you have taken to meet the carbon feed rate requirement.

(iv) The calendar date.

(2) Documentation of each quarter when total carbon purchased and delivered to the municipal waste combustion plant is less than the total required quarterly usage of carbon. If you choose to evaluate total carbon purchased and delivered on a municipal waste combustion unit basis, record the total carbon purchased and delivered for each individual municipal waste combustion unit at your plant. Include five items:

(i) Amount of carbon purchased and delivered to the plant.

(ii) Required quarterly usage of carbon.

(iii) Reasons for not meeting the required quarterly usage of carbon.

(iv) The corrective actions you have taken to meet the required quarterly usage of carbon.

(v) The calendar date.

§62.15360 Can reporting dates be changed?

(a) If the Administrator agrees, you may change the semiannual or annual reporting dates.

(b) *See* §60.19(c) in subpart A of 40 CFR part 60 for procedures to seek approval to change your reporting date.

AIR CURTAIN INCINERATORS THAT BURN 100 PERCENT YARD WASTE

§62.15365 What is an air curtain incinerator?

An air curtain incinerator operates by forcefully projecting a curtain of air across an open chamber or open pit in which combustion occurs. Incinerators of this type can be constructed above or below ground and with or without refractory walls and floor.

§62.15370 What is yard waste?

Yard waste is grass, grass clippings, bushes, shrubs, and clippings from bushes and shrubs. They come from residential, commercial/retail, institutional, or industrial sources as part of maintaining yards or other private or public lands. Yard waste does not include two items:

(a) Construction, renovation, and demolition wastes that are exempt from the definition of ''municipal solid waste'' in §62.15410.

(b) Clean wood that is exempt from the definition of ''municipal solid waste'' in §62.15410 of this subpart.

§62.15375 What are the emission limits for air curtain incinerators that burn 100 percent yard waste?

If your air curtain incinerator combusts 100 percent yard waste, you must meet only the emission limits in this section.

(a) Within 180 days after your final compliance date, you must meet two limits:

(1) The opacity limit is 10 percent (6-minute average) for air curtain incinerators that can combust at least 35 tons per day of yard waste and no more than 250 tons per day of yard waste.

(2) The opacity limit is 35 percent (6-minute average) during the startup period that is within the first 30 minutes of operation.

(b) Except during malfunctions, the requirements of this subpart apply at all times. Each malfunction must not exceed 3 hours.

§62.15380 How must I monitor opacity for air curtain incinerators that burn 100 percent yard waste?

(a) Use EPA Reference Method 9 in Appendix A of 40 CFR part 60 to determine compliance with the opacity limit.

(b) Conduct an initial test for opacity as specified in §60.8 of subpart A of 40 CFR part 60.

(c) After the initial test for opacity, conduct annual tests no more than 13 calendar months following the date of your previous test.

§62.15385 What are the recordkeeping and reporting requirements for air curtain incinerators that burn 100 percent yard waste?

(a) Provide a notice of construction that includes four items:

(1) Your intent to construct the air curtain incinerator.

(2) Your planned initial startup date.

(3) Types of fuels you plan to combust in your air curtain incinerator.

(4) The capacity of your incinerator, including supporting capacity calculations, as specified in §62.15390 (d) and (e).

(b) Keep records of results of all opacity tests onsite in either paper copy or electronic format unless the Administrator approves another format.

(c) Keep all records for each incinerator for at least 5 years.

(d) Make all records available for submittal to the Administrator or for onsite review by an inspector.

(e) Submit the results (each 6-minute average) of the opacity tests by February 1 of the year following the year of the opacity emission test.

(f) Submit reports as a paper copy on or before the applicable submittal date. If the Administrator agrees, you may submit reports on electronic media.

(g) If the Administrator agrees, you may change the annual reporting dates (*see* §60.19(c) in subpart A of 40 CFR part 60).

(h) Keep a copy of all reports onsite for a period of 5 years.

EQUATIONS

§ 62.15390 What equations must I use?

(a) *Concentration correction to 7 percent oxygen.* Correct any pollutant concentration to 7 percent oxygen using equation 1 of this section:

$$C_{7\%} = C_{unc} * (13.9) * \left(1/\left(20.9 - CO_2\right)\right) \qquad \text{(Eq. 1)}$$

Where:

$C_7\%$ = concentration corrected to 7 percent oxygen.

C_{unc} = uncorrected pollutant concentration.

C_{O2} = concentration of oxygen (%).

(b) *Percent reduction in potential mercury emissions.* Calculate the percent reduction in potential mercury emissions ($\%P_{Hg}$) using equation 2 of this section:

$$\%P_{Hg} = \left(E_i - E_o\right) * \left(100 / E_i\right) \qquad \text{(Eq. 2)}$$

Where:

$\%P_{Hg}$ = percent reduction of potential mercury emissions

E_i = mercury emission concentration as measured at the air pollution control device inlet, corrected to 7 percent oxygen, dry basis

E_o = mercury emission concentration as measured at the air pollution control device outlet, corrected to 7 percent oxygen, dry basis

(c) *Percent reduction in potential hydrogen chloride emissions.* Calculate the percent reduction in potential hydrogen chloride emissions ($\%P_{HCl}$) using equation 3 of this section:

$$\%P_{HCl} = \left(E_i - E_o\right) * \left(100 / E_i\right) \qquad \text{(Eq. 3)}$$

Where:

$\%P_{HCl}$ = percent reduction of the potential hydrogen chloride emissions

E_i = hydrogen chloride emission concentration as measured at the air pollution control device inlet, corrected to 7 percent oxygen, dry basis

E_o = hydrogen chloride emission concentration as measured at the air pollution control device outlet, corrected to 7 percent oxygen, dry basis

(d) *Capacity of a municipal waste combustion unit.* For a municipal waste combustion unit that can operate continuously for 24-hour periods, calculate the capacity of the municipal waste combustion unit based on 24 hours of operation at the maximum charge rate. To determine the maximum charge rate, use one of two methods:

(1) For municipal waste combustion units with a design based on heat input capacity, calculate the maximum charging rate based on this maximum heat input capacity and one of two heating values:

(i) If your municipal waste combustion unit combusts refuse-derived fuel, use a heating value of 12,800 kilojoules per kilogram (5,500 British thermal units per pound).

(ii) If your municipal waste combustion unit combusts municipal solid waste, use a heating value of 10,500 kilojoules per kilogram (4,500 British thermal units per pound).

(2) For municipal waste combustion units with a design not based on heat input capacity, use the maximum designed charging rate.

(e) *Capacity of a batch municipal waste combustion unit.* Calculate the capacity of a batch municipal waste combustion unit as the maximum design amount of municipal solid waste they can charge per batch multiplied by the maximum number of batches they can process in 24 hours. Calculate this maximum number of batches by dividing 24 by the number of hours needed to process one batch. Retain fractional batches in the calculation. For example, if one batch requires 16 hours, the municipal waste combustion unit can combust 24/16, or 1.5 batches, in 24 hours.

(f) *Quarterly carbon usage.* If you use activated carbon to comply with the dioxins/furans or mercury limits, calculate the required quarterly usage of carbon using equation 4 or 5 of this section for plant basis or unit basis:

(1) Plant basis.

$$C = \sum_{i=1}^{n} f_i * h_i \qquad \text{(Eq. 4)}$$

Where:

C = required quarterly carbon usage for the plant in kilograms (or pounds).

f_i = required carbon feed rate for the municipal waste combustion unit in kilograms (or pounds) per hour. This is the average carbon feed rate during the most recent mercury or dioxins/furans stack tests (whichever has a higher feed rate).

h_i = number of hours the municipal waste combustion unit was in operation during the calendar quarter (hours).

n = number of municipal waste combustion units, i, located at your plant.

(2) Unit basis.

$$C = f * h \qquad \text{(Eq. 5)}$$

Where:

C = required quarterly carbon usage for the unit in kilograms (or pounds).

f = required carbon feed rate for the municipal waste combustion unit in kilograms (or pounds) per hour. This is the average carbon feed rate during the most recent mercury or dioxins/furans stack tests (whichever has a higher feed rate).

h = number of hours the municipal waste combustion unit was in operation during the calendar quarter (hours).

TITLE V REQUIREMENTS

§62.15395 Does this subpart require me to obtain an operating permit under title V of the Clean Air Act?

Yes. If you are subject to this subpart on the effective date of this subpart or any time thereafter, you are required to apply for and obtain a title V operating permit.

§62.15400 When must I submit a title V permit application for my existing small municipal waste combustion unit?

(a) You must submit a complete title V permit application within 12 months of when your source first becomes subject to a title V permitting program. *See* 40 CFR 70.3(a) and (b), 70.5(a)(1), 71.3(a) and (b), and 71.5(a)(1). As provided in section 503(c) of the Clean Air Act, permitting authorities may establish permit application deadlines earlier than the 12-month deadline.

(b) If your existing small MWC unit is not subject to an earlier permit application deadline, a complete title V permit application must be submitted not later than the date 36 months after promulgation of 40 CFR part 60, subpart BBBB (December 6, 2003), or by the effective date of the applicable State, tribal, or Federal operating permits program, whichever is later. For any existing small MWC unit not subject to an earlier application deadline, this final application deadline applies regardless of when this Federal plan is effective, or when the relevant State or Tribal section 111(d)/129 plan is approved by EPA and becomes effective. *See* sections 129(e), 503(c), 503(d), and 502(a) of the Clean Air Act.

(c) A ''complete'' title V permit application is one that has been determined or deemed complete by the relevant permitting authority under section 503(d) of the Clear Air Act and 40 CFR 70.5(a)(2) or 71.5(a)(2). You must submit a complete permit application by the relevant application deadline in order to operate after this date in compliance with Federal law. *See* sections 503(d) and 502(a); 40 CFR 70.7(b) and 71.7(b).

DELEGATION OF AUTHORITY

§ 62.15405 What authorities are retained by the Administrator?

These authorities are retained by the EPA Administrator and not transferred to the State upon delegation of authority to the State to implement and enforce this subpart.

(a) Approval of alternative non-opacity emission standard;

(b) Approval of alternative opacity standard;

(c) Approval of major alternatives to test methods;

(d) Approval of major alternatives to monitoring;

(e) Waiver of recordkeeping; and

(f) Approval of exemption to operating practice requirements in § 62.15145(e)(5).

DEFINITIONS

§ 62.15410 What definitions must I know?

Terms used but not defined in this section are defined in the Clean Air Act and in subparts A and B of 40 CFR part 60.

Administrator means the Administrator of the U.S. Environmental Protection Agency or his/her authorized representative or the Administrator of a State Air Pollution Control Agency.

Air curtain incinerator means an incinerator that operates by forcefully projecting a curtain of air across an open chamber or pit in which combustion occurs. Incinerators of this type can be constructed above or below ground and with or without refractory walls and floor.

Batch municipal waste combustion unit means a municipal waste combustion unit designed so it cannot combust municipal solid waste continuously 24 hours per day because the design does not allow waste to be fed to the unit or ash to be removed during combustion.

Calendar quarter means three consecutive months (nonoverlapping) beginning on: January 1, April 1, July 1, or October 1.

Calendar year means 365 consecutive days (or 366 consecutive days in leap years) starting on January 1 and ending on December 31.

Chief facility operator means the person in direct charge and control of the operation of a municipal waste combustion unit. This person is responsible for daily onsite supervision, technical direction, management, and overall performance of the municipal waste combustion unit.

Class I units mean small municipal waste combustion units subject to this subpart that are located at municipal waste combustion plants with an aggregate plant combustion capacity greater than 250 tons per day of municipal solid waste. See the definition of ''municipal waste combustion plant capacity'' for specification of which units at a plant site are included in the aggregate capacity calculation.

Class II units mean small municipal combustion units subject to this subpart that are located at municipal waste combustion plants with aggregate plant combustion capacity less than or equal to 250 tons per day of municipal solid waste. See the definition of ''municipal waste combustion plant capacity'' for specification of which units at a plant site are included in the aggregate capacity calculation.

Clean wood means untreated wood or untreated wood products including clean untreated lumber, tree stumps (whole or chipped), and tree limbs (whole or chipped). Clean wood does not include two items:

(1) ''Yard waste'', which is defined in this section.

(2) Construction, renovation, or demolition wastes (for example, railroad ties and telephone poles) that are exempt from the definition of municipal solid waste in this section.

Cofired combustion unit means a unit that combusts municipal solid waste with nonmunicipal solid waste fuel (for example, coal, industrial process waste). To be considered a cofired combustion unit, the unit must be subject to a federally enforceable permit that limits it to combusting a fuel feed stream which is 30 percent or less (by weight) municipal solid waste as measured each calendar quarter.

Continuous burning means the continuous, semicontinuous, or batch feeding of municipal solid waste to dispose of the waste, produce energy, or provide heat to the combustion system in preparation for waste disposal or energy production. Continuous burning does

not mean the use of municipal solid waste solely to thermally protect the grate or hearth during the startup period when municipal solid waste is not fed to the grate or hearth.

Continuous emission monitoring system means a monitoring system that continuously measures the emissions of a pollutant from a municipal waste combustion unit.

Contract means a legally binding agreement or obligation that cannot be canceled or modified without substantial financial loss.

De-rate means to make a permanent physical change to the municipal waste combustor unit that reduces the maximum combustion capacity of the unit to less than or equal to 35 tons per day of municipal solid waste. A permit restriction or a change in the method of operation does not qualify as de-rating.

Dioxins/furans mean tetra- through octachlorinated dibenzo-p-dioxins and dibenzofurans.

Effective date of State plan approval means the effective date that the EPA approves the State plan. The FEDERAL REGISTER specifies this date in the notice that announces EPA's approval of the State plan.

Eight-hour block average means the average of all hourly emission concentrations or parameter levels when the municipal waste combustion unit operates and combusts municipal solid waste measured over any of three 8-hour periods of time:

(1) 12 midnight to 8 a.m.

(2) 8 a.m. to 4 p.m.

(3) 4 p.m. to 12 midnight.

EPA-approved State plan means a State plan that EPA has reviewed and approved based on the requirements in 40 CFR part 60 subpart B to implement and enforce 40 CFR part 60, subpart BBBB. An approved State plan becomes effective on the date specified in the notice published in the FEDERAL REGISTER announcing EPA's approval.

Federally enforceable means all limits and conditions the Administrator can enforce (including the requirements of 40 CFR parts 60, 61, and 63), requirements in a State's implementation plan, and any permit requirements established under 40 CFR 52.21 or under 40 CFR 51.18 and 40 CFR 51.24.

First calendar half means the period that starts on January 1 and ends on June 30 in any year.

Fluidized bed combustion unit means a unit where municipal waste is combusted in a fluidized bed of material. The fluidized bed material may remain in the primary combustion zone or may be carried out of the primary combustion zone and returned through a recirculation loop.

Four-hour block average or *4-hour block average* means the average of all hourly emission concentrations or parameter levels when the municipal waste combustion unit operates and combusts municipal solid waste measured over any of six 4-hour periods:

(1) 12 midnight to 4 a.m.

(2) 4 a.m. to 8 a.m.

(3) 8 a.m. to 12 noon.

(4) 12 noon to 4 p.m.

(5) 4 p.m. to 8 p.m.

(6) 8 p.m. to 12 midnight.

Mass burn refractory municipal waste combustion unit means a field-erected municipal waste combustion unit that combusts municipal solid waste in a refractory wall furnace. Unless otherwise specified, this includes municipal waste combustion units with a cylindrical rotary refractory wall furnace.

Mass burn rotary waterwall municipal waste combustion unit means a field-erected municipal waste combustion unit that combusts municipal solid waste in a cylindrical rotary waterwall furnace.

Mass burn waterwall municipal waste combustion unit means a field-erected municipal waste combustion unit that combusts municipal solid waste in a waterwall furnace.

Maximum demonstrated load of a municipal waste combustion unit means the highest 4-hour block arithmetic average municipal waste combustion unit load achieved during 4 consecutive hours in the course of the most recent dioxins/furans stack test that demonstrates compliance with the applicable emission limit for dioxins/furans specified in this subpart.

Maximum demonstrated temperature of the particulate matter control device means the highest 4-hour block arithmetic average flue gas temperature measured at the inlet of the particulate matter control device during 4

consecutive hours in the course of the most recent stack test for dioxins/furans emissions that demonstrates compliance with the limits specified in this subpart.

Medical/infectious waste means any waste meeting the definition of medical/infectious waste contained in 40 CFR 60.51c of subpart Ec.

Mixed fuel-fired (pulverized coal/refuse-derived fuel) combustion unit means a combustion unit that combusts coal and refuse-derived fuel simultaneously, in which pulverized coal is introduced into an air stream that carries the coal to the combustion chamber of the unit where it is combusted in suspension. This includes both conventional pulverized coal and micropulverized coal.

Modification or *modified municipal waste combustion unit* means a municipal waste combustion unit you have changed later than June 6, 2001, and that meets one of two criteria:

(1) The cumulative cost of the changes over the life of the unit exceeds 50 percent of the original cost of building and installing the unit (not including the cost of land) updated to current costs.

(2) Any physical change in the municipal waste combustion unit or change in the method of operating it that increases the emission level of any air pollutant for which standards have been established under section 129 or section 111 of the Clean Air Act. Increases in the emission level of any air pollutant are determined when the municipal waste combustion unit operates at 100 percent of its physical load capability and are measured downstream of all air pollution control devices. Load restrictions based on permits or other nonphysical operational restrictions cannot be considered in this determination.

Modular excess-air municipal waste combustion unit means a municipal waste combustion unit that combusts municipal solid waste, is not field-erected, and has multiple combustion chambers, all of which are designed to operate at conditions with combustion air amounts in excess of theoretical air requirements.

Modular starved-air municipal waste combustion unit means a municipal waste combustion unit that combusts municipal solid waste, is not field-erected, and has multiple combustion chambers in which the primary combustion chamber is designed to operate at substoichiometric conditions.

Municipal solid waste or *municipal-type solid waste* means household, commercial/retail, or institutional waste. Household waste includes material discarded by residential dwellings, hotels, motels, and other similar permanent or temporary housing. Commercial/retail waste includes material discarded by stores, offices, restaurants, warehouses, nonmanufacturing activities at industrial facilities, and other similar establishments or facilities. Institutional waste includes materials discarded by schools, by hospitals (nonmedical), by nonmanufacturing activities at prisons and government facilities, and other similar establishments or facilities. Household, commercial/retail, and institutional waste does include yard waste and refuse-derived fuel. Household, commercial/retail, and institutional waste does not include used oil; sewage sludge; wood pallets; construction, renovation, and demolition wastes (which include railroad ties and telephone poles); clean wood; industrial process or manufacturing wastes; medical waste; or motor vehicles (including motor vehicle parts or vehicle fluff).

Municipal waste combustion plant means one or more municipal waste combustion units at the same location as specified under ''Applicability of State Plans'' (§ 62.15010(a)).

Municipal waste combustion plant capacity means the aggregate municipal waste combustion capacity of all municipal waste combustion units at the plant that are not subject to subparts Ea, Eb, or AAAA of 40 CFR part 60.

Municipal waste combustion unit means any setting or equipment that combusts solid, liquid, or gasified municipal solid waste including, but not limited to, field-erected combustion units (with or without heat recovery), modular combustion units (starved-air or excess-air), boilers (for example, steam generating units), furnaces (whether suspension-fired, grate-fired, mass-fired, air curtain incinerators, or

fluidized bed-fired), and pyrolysis/combustion units. Two criteria further define these municipal waste combustion units:

(1) Municipal waste combustion units do not include pyrolysis or combustion units located at a plastics or rubber recycling unit as specified under §62.15020(h) and (i). Municipal waste combustion units do not include cement kilns that combust municipal solid waste as specified under §62.15020(j). Municipal waste combustion units also do not include internal combustion engines, gas turbines, or other combustion devices that combust landfill gases collected by landfill gas collection systems.

(2) The boundaries of a municipal waste combustion unit are defined as follows. The municipal waste combustion unit includes, but is not limited to, the municipal solid waste fuel feed system, grate system, flue gas system, bottom ash system, and the combustion unit water system. The municipal waste combustion unit does not include air pollution control equipment, the stack, water treatment equipment, or the turbine-generator set. The municipal waste combustion unit boundary starts at the municipal solid waste pit or hopper and extends through three areas:

(i) The combustion unit flue gas system, which ends immediately after the heat recovery equipment or, if there is no heat recovery equipment, immediately after the combustion chamber.

(ii) The combustion unit bottom ash system, which ends at the truck loading station or similar equipment that transfers the ash to final disposal. It includes all ash handling systems connected to the bottom ash handling system.

(iii) The combustion unit water system, which starts at the feed water pump and ends at the piping that exits the steam drum or superheater.

Particulate matter means total particulate matter emitted from municipal waste combustion units as measured by EPA Reference Method 5 in Appendix A of 40 CFR part 60 and the procedures specified in §62.15245.

Plastics or rubber recycling unit means an integrated processing unit for which plastics, rubber, or rubber tires are the only feed materials (incidental contaminants may be in the feed materials). These materials are processed and marketed to become input feed stock for chemical plants or petroleum refineries. The following three criteria further define a plastics or rubber recycling unit:

(1) Each calendar quarter, the combined weight of the feed stock that a plastics or rubber recycling unit produces must be more than 70 percent of the combined weight of the plastics, rubber, and rubber tires that recycling unit processes.

(2) The plastics, rubber, or rubber tires fed to the recycling unit may originate from separating or diverting plastics, rubber, or rubber tires from municipal or industrial solid waste. These feed materials may include manufacturing scraps, trimmings, and off-specification plastics, rubber, and rubber tire discards.

(3) The plastics, rubber, and rubber tires fed to the recycling unit may contain incidental contaminants (for example, paper labels on plastic bottles or metal rings on plastic bottle caps).

Potential hydrogen chloride emissions means the level of emissions from a municipal waste combustion unit that would occur from combusting municipal solid waste without emission controls for acid gases.

Potential mercury emissions means the level of emissions from a municipal waste combustion unit that would occur from combusting municipal solid waste without controls for mercury emissions.

Potential sulfur dioxide emissions means the level of emissions from a municipal waste combustion unit that would occur from combusting municipal solid waste without emission controls for acid gases.

Protectorate means American Samoa, the Commonwealth of Puerto Rico, the District of Columbia, Guam, the Northern Mariana Islands, and the Virgin Islands.

Pyrolysis/combustion unit means a unit that produces gases, liquids, or solids by heating municipal solid waste. The gases, liquids, or solids produced are combusted and the emissions vented to the atmosphere.

Reconstruction means rebuilding a municipal waste combustion unit and meeting two criteria:

(1) The reconstruction begins on or after June 6, 2001.

(2) The cumulative cost of the construction over the life of the unit exceeds 50 percent of the original cost of building and installing the municipal waste combustion unit (not including land) updated to current costs (current dollars). To determine what systems are within the boundary of the municipal waste combustion unit used to calculate these costs, see the definition of ''municipal waste combustion unit'' in this section.

Refractory unit or *refractory wall furnace* means a municipal waste combustion unit that has no energy recovery (such as through a waterwall) in the furnace of the municipal waste combustion unit.

Refuse-derived fuel means a type of municipal solid waste produced by processing municipal solid waste through shredding and size classification. This includes all classes of refuse-derived fuel including two fuels:

(1) Low-density fluff refuse-derived fuel through densified refuse-derived fuel.

(2) Pelletized refuse-derived fuel.

Same location means the same or contiguous properties under common ownership or control, including those separated only by a street, road, highway, or other public right-of-way. Common ownership or control includes properties that are owned, leased, or operated by the same entity, parent entity, subsidiary, subdivision, or any combination thereof. Entities may include a municipality, other governmental unit, or any quasi-governmental authority (for example, a public utility district or regional authority for waste disposal).

Second calendar half means the period that starts on July 1 and ends on December 31 in any year.

Shift supervisor means the person who is in direct charge and control of operating a municipal waste combustion unit and who is responsible for onsite supervision, technical direction, management, and overall performance of the municipal waste combustion unit during an assigned shift.

Spreader stoker, mixed fuel-fired (coal/refuse-derived fuel) combustion unit means a municipal waste combustion unit that combusts coal and refuse-derived fuel simultaneously, in which coal is introduced to the combustion zone by a mechanism that throws the fuel onto a grate from above. Combustion takes place both in suspension and on the grate.

Standard conditions when referring to units of measure mean a temperature of 20 °C and a pressure of 101.3 kilopascals.

Startup period means the period when a municipal waste combustion unit begins the continuous combustion of municipal solid waste. It does not include any warmup period during which the municipal waste combustion unit combusts fossil fuel or other solid waste fuel but receives no municipal solid waste.

State means any of the 50 United States and the protectorates of the United States.

State plan means a plan submitted pursuant to section 111(d) and section 129(b)(2) of the Clean Air Act and 40 CFR part 60, subpart B, that implements and enforces 40 CFR part 60, subpart BBBB.

Stoker (refuse-derived fuel) combustion unit means a steam generating unit that combusts refuse-derived fuel in a semisuspension combusting mode, using air-fed distributors.

Total mass dioxins/furans or *total mass* means the total mass of tetra-through octachlorinated dibenzo-p-dioxins and dibenzofurans as determined using EPA Reference Method 23 in Appendix A of 40 CFR part 60 and the procedures specified in § 62.15245.

Tribal plan means a plan submitted by a tribal authority pursuant to 40 CFR parts 9, 35, 49, 50, and 81 that implements and enforces 40 CFR part 60 subpart BBBB.

Twenty-four hour daily average or *24-hour daily average* means either the arithmetic mean or geometric mean (as specified) of all hourly emission concentrations when the municipal waste combustion unit operates and combusts municipal solid waste measured during the 24 hours between 12:00 midnight and the following midnight.

Untreated lumber means wood or wood products that have been cut or shaped and include wet, air-dried, and kiln-dried wood products. Untreated lumber does not include wood products that have been painted, pigment-stained, or pressure-treated by compounds such as chromate copper arsenate, pentachlorophenol, and creosote.

Waterwall furnace means a municipal waste combustion unit that has energy (heat) recovery in the furnace (for example, radiant heat transfer section) of the combustion unit.

Yard waste means grass, grass clippings, bushes, shrubs, and clippings from bushes and shrubs. They come from residential, commercial/retail, institutional, or industrial sources as part of maintaining yards or other private or public lands. Yard waste does not include two items:

(1) Construction, renovation, and demolition wastes that are exempt from the definition of "municipal solid waste" in this section.

(2) Clean wood that is exempt from the definition of "municipal solid waste" in this section.

TABLE 1 OF SUBPART JJJ OF PART 62—GENERIC COMPLIANCE SCHEDULES AND INCREMENTS OF PROGRESS

Affected units	Increment 1 (Submit final control plan)	Increment 2 (Award contracts)	Increment 3 (Begin onsite construction)	Increment 4 (Complete onsite construction)	Increment 5 (Final compliance)
1. Class I units[a,b]	August 6, 2003	April 6, 2004	October 6, 2004	October 6, 2005	November 6, 2005
2. Class II units [c]	September 6, 2003	Not applicable	Not applicable	Not applicable	May 6, 2005

[a] Class I units mean small municipal waste combustion units subject to this subpart that are located at municipal waste combustion plants with an aggregate plant combustion capacity greater than 250 tons per day of municipal solid waste. See §62.15410 for definitions.

[b] For Class I units that began construction, reconstruction, or modification after June 26, 1987, comply with the dioxins/furans and mercury limits by the later of two dates:

1. One year after the effective date of this subpart.
2. One year after the issuance of a revised construction or operation permit, if a permit modification is required. Final compliance with the dioxins/furans limits must be achieved no later than the Class I final compliance date, even if the date one year after the issuance of a revised construction or operation permit exceeds the Class I final compliance date.

[c] Class II units mean all small municipal combustion units subject to this subpart that are located at municipal waste combustion plants with aggregate plant combustion capacity less than or equal to 250 tons per day of municipal solid waste. See §62.15410 for definitions.

TABLE 2 OF SUBPART JJJ OF PART 62—CLASS I EMISSION LIMITS FOR EXISTING SMALL MUNICIPAL WASTE COMBUSTION LIMITS

For these pollutants	You must meet these emission limits[b]	Using these averaging times	And determine compliance by these methods
1. Organics			
Dioxins/furans (total mass basis)	30 nanograms per dry standard cubic meter for municipal waste combustion units that do not employ an electrostatic precipitator-based emission control system -or- 60 nanograms per dry standard cubic meter for municipal waste combustion units that employ an electrostatic precipitator-based emission control system	3-run average (minimum run duration is 4 hours)	Stack test
2. Metals			
Cadmium	0.040 milligrams per dry standard cubic meter	3-run average (run duration specified in test method)	Stack test
Lead	0.490 milligrams per dry standard cubic meter	3-run average (run duration specified in test method)	Stack test
Mercury	0.080 milligrams per dry standard cubic meter -or- 85 percent reduction of potential mercury emissions	3-run average (run duration specified in test method)	Stack test
Opacity	10 percent	Thirty 6-minute averages	Stack test
Particulate Matter	27 milligrams per dry standard cubic meter	3-run average (run duration specified in test method)	Stack test

[a] Class I units mean small municipal waste combustion units subject to this subpart that are located at municipal waste combustion plants with an aggregate plant combustion capacity greater than 250 tons per day of municipal solid waste. See §62.15410 for definitions.

[b] All emission limits (except for opacity) are measured at 7 percent oxygen.

For these pollutants	You must meet these emission limits[b]	Using these averaging times	And determine compliance by these methods
3. Acid gases			
Hydrogen Chloride	31 parts per million by dry volume -or- 95 percent reduction of potential hydrogen chloride emissions	3-run average (minimum run duration is 1 hour)	Stack test
Sulfur Dioxide	31 parts per million by dry volume -or - 75 percent reduction of potential sulfur dioxide emissions	24-hour daily block geometric average concentration -or- percent reduction	Continuous emission monitoring system
4. Other			
Fugitive Ash	Visible emissions for no more than 5 percent of hourly observation period	Three 1-hour observation periods	Visible emission test

[a] Class I units mean small municipal waste combustion units subject to this subpart that are located at municipal waste combustion plants with an aggregate plant combustion capacity greater than 250 tons per day of municipal solid waste. See §62.15410 for definitions.
[b] All emission limits (except for opacity) are measured at 7 percent oxygen.

TABLE 3 OF SUBPART JJJ OF PART 62—CLASS I NITROGEN OXIDES EMISSION LIMITS FOR EXISTING SMALL MUNICIPAL WASTE COMBUSTION UNITS[A,B,C]

Municipal Waste Combustion Technology	Limits for Class I Municipal Waste Combustion Units
1. Mass burn waterwall	200 parts per million by dry volume
2. Mass burn rotary waterwall	170 parts per million by dry volume
3. Refuse-derived fuel	250 parts per million by dry volume
4. Fluidized bed	220 parts per million by dry volume
5. Mass burn refractory	350 parts per million by dry volume
6. Modular excess air	190 parts per million by dry volume
7. Modular starved air	380 parts per million by dry volume

[a] Class I units mean small municipal waste combustion units subject to this subpart that are located at municipal waste combustion plants with an aggregate plant combustion capacity greater than 250 tons per day of municipal solid waste. See §62:15410 for definitions.
[b] Nitrogen oxides limits are corrected to 7 percent oxygen, dry basis.
[c] All limits are 24-hour daily block arithmetic average concentration. Compliance is determined for Class I units by continuous emission monitoring systems.

TABLE 4 OF SUBPART JJJ OF PART 62—CLASS II EMISSION LIMITS FOR EXISTING SMALL MUNICIPAL WASTE COMBUSTION UNITS[A]

For these pollutants		You must meet these emission limits[b]	Using these averaging times	And determine compliance by these methods
1. Organics				
	Dioxins/furans (total mass basis)	125 nanograms per dry standard cubic meter	3-run average (minimum run duration is 4 hours)	Stack test
2. Metals				
	Cadmium	0.10 milligrams per dry standard cubic meter	3-run average (run duration specified in test method)	Stack test
	Lead	1.6 milligrams per dry standard cubic meter	3-run average (run duration specified in test method)	Stack test
	Mercury	0.080 milligrams per dry standard cubic meter -or- 85 percent reduction of potential mercury emissions	3-run average (run duration specified in test method)	Stack test
	Opacity	10 percent	Thirty 6-minute averages	Stack test
	Particulate Matter	70 milligrams per dry standard cubic meter	3-run average (run duration specified in test method)	Stack test
3. Acid gases				
	Hydrogen Chloride	250 parts per million by volume -or- 50 percent reduction of potential hydrogen chloride emissions	3-run average (minimum run duration is 1 hour)	Stack test

[a] Class II units mean all small municipal combustion units subject to this subpart that are located at municipal waste combustion plants with aggregate plant combustion capacity less than or equal to 250 tons per day of municipal solid waste. See §62.15410 for definitions.

[b] All emission limits (except for opacity) measured at 7 percent oxygen.

For these pollutants		You must meet these emission limits[b]	Using these averaging times	And determine compliance by these methods
3. Acid gases				
	Nitrogen Oxides	500 parts per million by dry volume	See footnote c	See footnote c
	Sulfur Dioxide	77 parts per million by dry volume -or - 50 percent reduction of potential sulfur dioxides emissions	24-hour daily block geometric average concentration -or- percent reduction	Continuous emission monitoring system
4. Other				
	Fugitive Ash	Visible emissions for no more than 5 percent of hourly observation period	Three 1-hour observation periods	Visible emission test

[a] Class II units mean all small municipal combustion units subject to this subpart that are located at municipal waste combustion plants with aggregate plant combustion capacity less than or equal to 250 tons per day of municipal solid waste. See §62.15410 for definitions.

[b] All emission limits (except for opacity) are measured at 7 percent oxygen.

[c] No monitoring, testing, recordkeeping or reporting is required to demonstrate compliance with the nitrogen oxides limit for Class II units.

TABLE 5 OF SUBPART JJJ OF PART 62—CARBON MONOXIDE EMISSION LIMITS FOR EXISTING SMALL MUNICIPAL WASTE COMBUSTION UNITS

For these municipal waste combustion units	You must meet the carbon monoxide limits[a]	Using these averaging times[b]
1. Fluidized bed	100 parts per million by dry volume	4-hour
2. Fluidized bed, mixed fuel, (wood/refuse-derived fuel)	200 parts per million by dry volume	24-hour[c]
3. Mass burn rotary refractory	100 parts per million by dry volume	4-hour
4. Mass burn rotary waterwall	250 parts per million by dry volume	24-hour
5. Mass burn waterwall and refractory	100 parts per million by dry volume	4-hour
6. Mixed fuel-fired, (pulverized coal/refuse-derived fuel)	150 parts per million by dry volume	4-hour
7. Modular starved-air and excess air	50 parts per million by dry volume	4-hour
8. Spreader stoker, mixed fuel-fired (coal/refuse-derived fuel)	200 parts per million by dry volume	24-hour daily
9. Stoker, refuse-derived fuel	200 parts per million by dry volume	24-hour daily

[a] All emission limits (except for opacity) are measured at 7 percent oxygen. Compliance is determined by continuous emission monitoring systems.
[b] Block averages, arithmetic mean. See §62.15410 for definitions.
[c] 24-hour block average, geometric mean.

TABLE 6 OF SUBPART JJJ OF PART 62—REQUIREMENTS FOR VALIDATING CONTINUOUS EMISSION MONITORING SYSTEMS (CEMS)

For these continuous monitoring systems	Use these methods to validate pollutant concentration levels[a]	Use these methods to measure oxygen (or carbon dioxide)[a]
1. Nitrogen oxides (Class I units only)[b]	Method 7, 7A, 7B, 7C, 7D, or 7E	Method 3 or 3A
2. Sulfur dioxide	Method 6 or 6C	Method 3 or 3A
3. Carbon monoxide	Method 10, 10A, or 10B	Method 3 or 3A

a Methods are in Appendix A of 40 CFR part 60.

b Class I units mean small municipal waste combustion units subject to this subpart that are located at municipal waste combustion plants with an aggregate plant combustion capacity greater than 250 tons per day of municipal solid waste. See §62.15410 for definitions.

TABLE 7 OF SUBPART JJJ OF PART 62—REQUIREMENTS FOR CONTINUOUS EMISSION MONITORING SYSTEMS (CEMS)[A]

For these pollutants	Use these span values for your CEMS	Use these performance specifications for your CEMS (from appendix B in 40 CFR part 60)	If needed to meet minimum data requirements, use these alternate methods to collect data
1. Opacity	100 percent opacity	P.S. 1	Method 9
2. Nitrogen oxides (Class I units only)	**Control device outlet:** 125 percent of the maximum expected hourly potential nitrogen oxides emissions of the municipal waste combustion unit	P.S. 2	Method 7E
3. Sulfur dioxide	**Inlet to control device:** 125 percent of the maximum expected hourly potential sulfur dioxide emissions of the municipal waste combustion unit **Control device outlet:** 50 percent of the maximum expected hourly potential sulfur dioxide emissions of the municipal waste combustion unit	P.S. 2	Method 6C
4. Carbon monoxide	125 percent of the maximum expected hourly potential carbon monoxide emissions of the municipal waste combustion unit	P.S. 4A	Method 10 with alternative interference trap
5. Oxygen or carbon dioxide	25 percent oxygen or 25 percent carbon dioxide	P.S. 3	Method 3A or 3B

[a] Methods are in Appendix A of 40 CFR part 60.

TABLE 8 OF SUBPART JJJ OF PART 62—REQUIREMENTS FOR STACK TESTS

To measure these pollutants	Use these methods to determine the sampling location[a]	Use these methods to measure pollutant concentration[a]	Also note the following additional information
1. Organics			
Dioxins/furans	Method 1	Method 23[b]	The minimum sampling time must be 4 hours per test run while the municipal waste combustion unit is operating at full load.
2. Metals			
Cadmium	Method 1	Method 29[b]	Compliance testing must be performed while the municipal waste combustion unit is operating at full load.
Lead	Method 1	Method 29[b]	Compliance testing must be performed while the municipal waste combustion unit is operating at full load.
Mercury	Method 1	Method 29[b]	Compliance testing must be performed while the municipal waste combustion unit is operating at full load.
Opacity	Method 9	Method 9	Use Method 9 to determine compliance with opacity limits. 3-hour observation period (thirty 6-minute averages).
Particulate matter	Method 1	Method 5 or 29[b]	The minimum sample volume must be 1.0 cubic meters. The probe and filter holder heating systems in the sample train must be set to provide a gas temperature no greater than 160 ±14 °C. The minimum sampling time is 1 hour.

[a] Methods are in Appendix A of 40 CFR part 60.
[b] Must simultaneously measure oxygen (or carbon dioxide) using Method 3A or 3B.
[c] Use CEMS to test sulfur dioxide, nitrogen oxide, and carbon monoxide. Stack tests are not required except for Appendix F quality assurance requirements.

To measure these pollutants	Use these methods to determine the sampling location[a]	Use these methods to measure pollutant concentration[a]	Also note the following additional information
3. Acid gases[c]			
Hydrogen chloride	Method 1	Method 26 or 26A[b]	Test runs must be at least 1 hour long while the municipal waste combustion unit is operating at full load.
4. Other[c]			
Fugitive ash	Not applicable	Method 22 (visible emissions)	The three 1-hour observation period must include periods when the facility transfers fugitive ash from the municipal waste combustion unit to the area where the fugitive ash is stored or loaded into containers or trucks.

[a] Must simultaneously measure oxygen (or carbon dioxide) using Method 3A or 3B.
[b] Use CEMS to test sulfur dioxide, nitrogen oxide, and carbon monoxide. Stack tests are not required except for Appendix F quality assurance requirements.

TABLE 9 OF SUBPART JJJ OF PART 62—SITE-SPECIFIC COMPLIANCE SCHEDULES AND INCREMENTS OF PROGRESS

Class I[a,b] units	State	Units that will Cease Operation	Increment 1 (Submit final control plan)	Increment 2 (Award contracts)	Increment 3 (Begin onsite construction)	Increment 4 (Complete onsite construction)	Increment 5 (Final compliance)
Dutchess County Resource Recovery Facility	NY	Not Applicable	August 6, 2003	February 6, 2004	August 6, 2004	October 6, 2005	December 6, 2005
Islip-MacArthur Resource Recovery Facility	NY	Not Applicable	August 6, 2003	February 6, 2004	August 6, 2004	October 6, 2005	December 6, 2005
Harrisburg Materials, Energy, Recycling and Recovery Facility	PA	June 18, 2003	Not Applicable	Not Applicable	Not Applicable	Not Applicable	Not Applicable

[a] Class I units mean small municipal waste combustion units subject to this subpart that are located at municipal waste combustion plants with an aggregate plant combustion capacity greater than 250 tons per day of municipal solid waste. See §62.15410 for definitions.

[b] For Class I units that began construction, reconstruction, or modification after June 26, 1987, comply with the dioxins/furans and mercury limits by the later of two dates:

1. One year after the effective date of this subpart.
2. One year after the issuance of a revised construction or operation permit, if a permit modification is required. Final compliance with the dioxins/furans limits must be achieved no later than the Class I final compliance date, even if the date one year after the issuance of a revised construction or operation permit exceeds the Class I final compliance date.

FINDING AIDS

A list of CFR titles, subtitles, chapters, subchapters and parts and an alphabetical list of agencies publishing in the CFR are included in the CFR Index and Finding Aids volume to the Code of Federal Regulations which is published separately and revised annually.

Material Approved for Incorporation by Reference
Table of CFR Titles and Chapters
Alphabetical List of Agencies Appearing in the CFR
List of CFR Sections Affected

Material Approved for Incorporation by Reference

(Revised as of July 1, 2003)

The Director of the Federal Register has approved under 5 U.S.C. 552(a) and 1 CFR Part 51 the incorporation by reference of the following publications. This list contains only those incorporations by reference effective as of the revision date of this volume. Incorporations by reference found within a regulation are effective upon the effective date of that regulation. For more information on incorporation by reference, see the preliminary pages of this volume.

40 CFR (PARTS 61 TO 62):
ENVIRONMENTAL PROTECTION AGENCY

	40 CFR
American National Standards Institute 25 West 43rd Street, Fourth floor, New York, NY 10036; Telephone: (212) 642–4900	
ANSI N13.1–1969 Guide to Sampling Airborne Radioactive Materials in Nuclear Facilities.	61.18(c)(1); 61.93(b)(2)(ii); 61.107(b)(2)(ii)
ANSI/HPS N13.1–1999 Sampling and Monitoring Releases of Airborne Radioactive Substances From the Stacks and Ducts of Nuclear Facilities.	61.18(c)(2); 61.93(c); 61.107(c); Method 114, paragraph 2.1 of Appendix B to 40 CFR Part 61
American Petroleum Institute 1220 L Street, NW, Washington DC 20005-4070; Telephone: (202) 682-8000	
API Publication 2517, Evaporative Loss from External Floating-Roof Tanks, Third Edition, February 1989.	61.18(e)(1); 61.241
American Society of Mechanical Engineers (ASME) Three Park Avenue, New York, NY 10016–5990; Order inquiries: 22 Law Drive, P.O. Box 2900, Fairfield, New Jersey 07007; Phone: 1-800-843-2763	
ASME QRO–1–1994, Standard for the Qualification and Certification of Resource Recovery Facility Operators.	62.14105(a) and (b); 62.15130
ASME PTC 4.1–1964 (Reaffirmed 1991), Power Test Codes: Test Code for Steam Generating Units (with 1968 and 1969 Addenda).	62.14104(b)
ASME PTC 4.1–1964 (Reaffirmed 1991), Power Test Codes: Test Code for Steam Generating Units.	62.15265
ASME Interim Supplement 19.5 on Instruments and Apparatus: Application, Part II of Fluid Meters, 6th Edition (1971).	62.14104(b); 62.15265
American Society for Testing and Materials 100 Barr Harbor Drive, West Conshohocken, PA 19428–2959; Telephone: (610) 832–9585, FAX: (610) 832–9555	
ASTM D 737–75, Standard Test Method for Air Permeability of Textile Fabrics.	61.23(a)
ASTM D 835–85, Standard Specification for Refined Benzene–485	61.18(a); 61.270(a)
ASTM D 836–80, Standard Specification for Industrial Grade Benzene	61.120(a)
ASTM D 836–84, Standard Specification for Industrial Grade Benzene	61.18(a); 61.270(a)

40 CFR (PARTS 61 TO 62):—Continued
ENVIRONMENTAL PROTECTION AGENCY—Continued

	40 CFR
ASTM D 1193–77, 91 Standard Specification for Reagent Water	61.18; Appendix B of Part 61: Method 101, Section 7.1.1; Method 101A, Section 7.1.1; Method 104, Section 7.1; Method 108, Section 7.1.3; Method 108A, Section 7.1.1; Method 108B, Section 7.1.1; Method 108C, Section 7.1.1; Method 111, Section 7.3
ASTM D 2267–68 (Reapproved 1978),88, Standard Test Method for Aromatics in Light Naphthas and Aviation Gasoline by Gas Chromatography.	61.18(a); 61.67(h)(1); 61.115(d)(1)
ASTM D 2359–85a, 93, Standard Specification for Refined Benzene–535.	61.18(a); 61.270(a)
ASTM D 2382–76, Standard Test Method for Heat of Combustion of Hydrocarbon Fuels by Bomb Calorimeter (High-Precision Method).	61.103(e)(3); 61.115(e)(3); 61.122(d)(3); 61.245(e)(3)
ASTM D 2504–67, 77, (Reapproved 1993), Standard Test Method for Noncondensable Gases in C3 and Lighter Hydrocarbon Products by Gas Chromatography.	61.103(b); 61.115(e); 61.122(d); 61.245(e)(3)
ASTM D 2879–83, Standard Test Method for Vapor Pressure-Temperature Relationship and Initial Decomposition Temperature of Liquids by Isoteniscope.	61.18(a); 61.241
ASTM D 2986–71 (Reapproved 1978), 95a, Standard Method for Evaluation of Air, Assay Media by the Monodisperse DOP (Dioctyl Phthalate) Smoke Test.	Appendix B to Part 61, Method 103, par. 2.1.3; Method 103, Section 6.1.3; Method 104, par. 3.1.1; 61.18(a)(3)
ASTM D 4734–87, 96, Standard Specification for Refined Benzene–545.	61.18(a); 61.270(a)
ASTM E 50–82 (Reapproved 1986), 90, 95, Standard Practice for Apparatus Reagents, and Safety Precautions for Chemical Analysis of Metals.	61.18(a)(11); Method 108C, Section 6.1.4, Appendix B to Part 61
Environmental Protection Agency, Air and Radiation Docket and Information Center EPA West Building, 1301 Constitution Avenue NW, Washington, DC	
New Hampshire Regulations Applicable to Hazardous Air Pollutants, March 2003.	61.04
Environmental Protection Agency Copies available at: First International Bldg., 1201 Elm St., Dallas, TX 75270	
Approved State Plans for designated facilities and pollutants	62.02(d)

40 CFR (PARTS 61 TO 62):—Continued

ENVIRONMENTAL PROTECTION AGENCY—Continued

	40 CFR
Approved Plan for Louisiana	
Copies available at: Environmental Monitoring and Support Laboratory, Cincinnati, OH 45268	
Method 601, Test Method for Purgeable Halocarbons, July 1982	61.67(g)(2)
U.S. Government Printing Office	
Washington, DC 20402–9371; Telephone: (202) 512–1800; Telefacsimile: (202) 275–0019	
Test Methods for Evaluating Solid Waste, Physical/Chemical Methods, November 1986, as amended by Revision I, December 1987, order no. 955–001–00000–1; Method 8020, Aromatic Volatile Organics; Method 8021, Volatile Organic Compounds in Water by Purge and Trap Capillary Column Gas Chromatography with Photoionization and Electrolytic Conductivity Detectors in Series; Method 8240, Gas Chromatography/Mass Spectrometry for Volatile Organics; Method 8260, Gas Chromatography/Mass Spectrometry for Volatile Organics: Capillary Column Technique.	61.18(c); 61.355 (c)(2)(iv)

Table of CFR Titles and Chapters

(Revised as of July 1, 2003)

Title 1—General Provisions

I Administrative Committee of the Federal Register (Parts 1—49)
II Office of the Federal Register (Parts 50—299)
IV Miscellaneous Agencies (Parts 400—500)

Title 2 [Reserved]

Title 3—The President

I Executive Office of the President (Parts 100—199)

Title 4—Accounts

I General Accounting Office (Parts 1—99)

Title 5—Administrative Personnel

I Office of Personnel Management (Parts 1—1199)
II Merit Systems Protection Board (Parts 1200—1299)
III Office of Management and Budget (Parts 1300—1399)
V The International Organizations Employees Loyalty Board (Parts 1500—1599)
VI Federal Retirement Thrift Investment Board (Parts 1600—1699)
VIII Office of Special Counsel (Parts 1800—1899)
IX Appalachian Regional Commission (Parts 1900—1999)
XI Armed Forces Retirement Home (Part 2100)
XIV Federal Labor Relations Authority, General Counsel of the Federal Labor Relations Authority and Federal Service Impasses Panel (Parts 2400—2499)
XV Office of Administration, Executive Office of the President (Parts 2500—2599)
XVI Office of Government Ethics (Parts 2600—2699)
XXI Department of the Treasury (Parts 3100—3199)
XXII Federal Deposit Insurance Corporation (Part 3201)
XXIII Department of Energy (Part 3301)
XXIV Federal Energy Regulatory Commission (Part 3401)
XXV Department of the Interior (Part 3501)
XXVI Department of Defense (Part 3601)

Title 5—Administrative Personnel—Continued

Chap.	
XXVIII	Department of Justice (Part 3801)
XXIX	Federal Communications Commission (Parts 3900—3999)
XXX	Farm Credit System Insurance Corporation (Parts 4000—4099)
XXXI	Farm Credit Administration (Parts 4100—4199)
XXXIII	Overseas Private Investment Corporation (Part 4301)
XXXV	Office of Personnel Management (Part 4501)
XL	Interstate Commerce Commission (Part 5001)
XLI	Commodity Futures Trading Commission (Part 5101)
XLII	Department of Labor (Part 5201)
XLIII	National Science Foundation (Part 5301)
XLV	Department of Health and Human Services (Part 5501)
XLVI	Postal Rate Commission (Part 5601)
XLVII	Federal Trade Commission (Part 5701)
XLVIII	Nuclear Regulatory Commission (Part 5801)
L	Department of Transportation (Part 6001)
LII	Export-Import Bank of the United States (Part 6201)
LIII	Department of Education (Parts 6300—6399)
LIV	Environmental Protection Agency (Part 6401)
LVII	General Services Administration (Part 6701)
LVIII	Board of Governors of the Federal Reserve System (Part 6801)
LIX	National Aeronautics and Space Administration (Part 6901)
LX	United States Postal Service (Part 7001)
LXI	National Labor Relations Board (Part 7101)
LXII	Equal Employment Opportunity Commission (Part 7201)
LXIII	Inter-American Foundation (Part 7301)
LXV	Department of Housing and Urban Development (Part 7501)
LXVI	National Archives and Records Administration (Part 7601)
LXVII	Institute of Museum and Library Services (Part 7701)
LXIX	Tennessee Valley Authority (Part 7901)
LXXI	Consumer Product Safety Commission (Part 8101)
LXXIII	Department of Agriculture (Part 8301)
LXXIV	Federal Mine Safety and Health Review Commission (Part 8401)
LXXVI	Federal Retirement Thrift Investment Board (Part 8601)
LXXVII	Office of Management and Budget (Part 8701)

Title 6—Homeland Security

I Department of Homeland Security, Office of the Secretary (Parts 0—99)

Title 7—Agriculture

SUBTITLE A—OFFICE OF THE SECRETARY OF AGRICULTURE (PARTS 0—26)

SUBTITLE B—REGULATIONS OF THE DEPARTMENT OF AGRICULTURE

Title 7—Agriculture—Continued

Chap.	
I	Agricultural Marketing Service (Standards, Inspections, Marketing Practices), Department of Agriculture (Parts 27—209)
II	Food and Nutrition Service, Department of Agriculture (Parts 210—299)
III	Animal and Plant Health Inspection Service, Department of Agriculture (Parts 300—399)
IV	Federal Crop Insurance Corporation, Department of Agriculture (Parts 400—499)
V	Agricultural Research Service, Department of Agriculture (Parts 500—599)
VI	Natural Resources Conservation Service, Department of Agriculture (Parts 600—699)
VII	Farm Service Agency, Department of Agriculture (Parts 700—799)
VIII	Grain Inspection, Packers and Stockyards Administration (Federal Grain Inspection Service), Department of Agriculture (Parts 800—899)
IX	Agricultural Marketing Service (Marketing Agreements and Orders; Fruits, Vegetables, Nuts), Department of Agriculture (Parts 900—999)
X	Agricultural Marketing Service (Marketing Agreements and Orders; Milk), Department of Agriculture (Parts 1000—1199)
XI	Agricultural Marketing Service (Marketing Agreements and Orders; Miscellaneous Commodities), Department of Agriculture (Parts 1200—1299)
XIV	Commodity Credit Corporation, Department of Agriculture (Parts 1400—1499)
XV	Foreign Agricultural Service, Department of Agriculture (Parts 1500—1599)
XVI	Rural Telephone Bank, Department of Agriculture (Parts 1600—1699)
XVII	Rural Utilities Service, Department of Agriculture (Parts 1700—1799)
XVIII	Rural Housing Service, Rural Business-Cooperative Service, Rural Utilities Service, and Farm Service Agency, Department of Agriculture (Parts 1800—2099)
XX	Local Television Loan Guarantee Board (Parts 2200—2299)
XXVI	Office of Inspector General, Department of Agriculture (Parts 2600—2699)
XXVII	Office of Information Resources Management, Department of Agriculture (Parts 2700—2799)
XXVIII	Office of Operations, Department of Agriculture (Parts 2800—2899)
XXIX	Office of Energy, Department of Agriculture (Parts 2900—2999)
XXX	Office of the Chief Financial Officer, Department of Agriculture (Parts 3000—3099)
XXXI	Office of Environmental Quality, Department of Agriculture (Parts 3100—3199)
XXXII	Office of Procurement and Property Management, Department of Agriculture (Parts 3200—3299)

Title 7—Agriculture—Continued

Chap.	
XXXIII	Office of Transportation, Department of Agriculture (Parts 3300—3399)
XXXIV	Cooperative State Research, Education, and Extension Service, Department of Agriculture (Parts 3400—3499)
XXXV	Rural Housing Service, Department of Agriculture (Parts 3500—3599)
XXXVI	National Agricultural Statistics Service, Department of Agriculture (Parts 3600—3699)
XXXVII	Economic Research Service, Department of Agriculture (Parts 3700—3799)
XXXVIII	World Agricultural Outlook Board, Department of Agriculture (Parts 3800—3899)
XLI	[Reserved]
XLII	Rural Business-Cooperative Service and Rural Utilities Service, Department of Agriculture (Parts 4200—4299)

Title 8—Aliens and Nationality

I	Department of Homeland Security (Immigration and Naturalization) (Parts 1—599)
V	Executive Office for Immigration Review, Department of Justice (Parts 1000—1400)

Title 9—Animals and Animal Products

I	Animal and Plant Health Inspection Service, Department of Agriculture (Parts 1—199)
II	Grain Inspection, Packers and Stockyards Administration (Packers and Stockyards Programs), Department of Agriculture (Parts 200—299)
III	Food Safety and Inspection Service, Department of Agriculture (Parts 300—599)

Title 10—Energy

I	Nuclear Regulatory Commission (Parts 0—199)
II	Department of Energy (Parts 200—699)
III	Department of Energy (Parts 700—999)
X	Department of Energy (General Provisions) (Parts 1000—1099)
XVII	Defense Nuclear Facilities Safety Board (Parts 1700—1799)
XVIII	Northeast Interstate Low-Level Radioactive Waste Commission (Part 1800)

Title 11—Federal Elections

I	Federal Election Commission (Parts 1—9099)

Title 12—Banks and Banking

Chap.

I Comptroller of the Currency, Department of the Treasury (Parts 1—199)

II Federal Reserve System (Parts 200—299)

III Federal Deposit Insurance Corporation (Parts 300—399)

IV Export-Import Bank of the United States (Parts 400—499)

V Office of Thrift Supervision, Department of the Treasury (Parts 500—599)

VI Farm Credit Administration (Parts 600—699)

VII National Credit Union Administration (Parts 700—799)

VIII Federal Financing Bank (Parts 800—899)

IX Federal Housing Finance Board (Parts 900—999)

XI Federal Financial Institutions Examination Council (Parts 1100—1199)

XIV Farm Credit System Insurance Corporation (Parts 1400—1499)

XV Department of the Treasury (Parts 1500—1599)

XVII Office of Federal Housing Enterprise Oversight, Department of Housing and Urban Development (Parts 1700—1799)

XVIII Community Development Financial Institutions Fund, Department of the Treasury (Parts 1800—1899)

Title 13—Business Credit and Assistance

I Small Business Administration (Parts 1—199)

III Economic Development Administration, Department of Commerce (Parts 300—399)

IV Emergency Steel Guarantee Loan Board (Parts 400—499)

V Emergency Oil and Gas Guaranteed Loan Board (Parts 500—599)

Title 14—Aeronautics and Space

I Federal Aviation Administration, Department of Transportation (Parts 1—199)

II Office of the Secretary, Department of Transportation (Aviation Proceedings) (Parts 200—399)

III Commercial Space Transportation, Federal Aviation Administration, Department of Transportation (Parts 400—499)

V National Aeronautics and Space Administration (Parts 1200—1299)

VI Air Transportation System Stabilization (Parts 1300—1399)

Title 15—Commerce and Foreign Trade

SUBTITLE A—OFFICE OF THE SECRETARY OF COMMERCE (PARTS 0—29)

SUBTITLE B—REGULATIONS RELATING TO COMMERCE AND FOREIGN TRADE

I Bureau of the Census, Department of Commerce (Parts 30—199)

Title 15—Commerce and Foreign Trade—Continued

Chap.

II National Institute of Standards and Technology, Department of Commerce (Parts 200—299)

III International Trade Administration, Department of Commerce (Parts 300—399)

IV Foreign-Trade Zones Board, Department of Commerce (Parts 400—499)

VII Bureau of Industry and Security, Department of Commerce (Parts 700—799)

VIII Bureau of Economic Analysis, Department of Commerce (Parts 800—899)

IX National Oceanic and Atmospheric Administration, Department of Commerce (Parts 900—999)

XI Technology Administration, Department of Commerce (Parts 1100—1199)

XIII East-West Foreign Trade Board (Parts 1300—1399)

XIV Minority Business Development Agency (Parts 1400—1499)

SUBTITLE C—REGULATIONS RELATING TO FOREIGN TRADE AGREEMENTS

XX Office of the United States Trade Representative (Parts 2000—2099)

SUBTITLE D—REGULATIONS RELATING TO TELECOMMUNICATIONS AND INFORMATION

XXIII National Telecommunications and Information Administration, Department of Commerce (Parts 2300—2399)

Title 16—Commercial Practices

I Federal Trade Commission (Parts 0—999)

II Consumer Product Safety Commission (Parts 1000—1799)

Title 17—Commodity and Securities Exchanges

I Commodity Futures Trading Commission (Parts 1—199)

II Securities and Exchange Commission (Parts 200—399)

IV Department of the Treasury (Parts 400—499)

Title 18—Conservation of Power and Water Resources

I Federal Energy Regulatory Commission, Department of Energy (Parts 1—399)

III Delaware River Basin Commission (Parts 400—499)

VI Water Resources Council (Parts 700—799)

VIII Susquehanna River Basin Commission (Parts 800—899)

XIII Tennessee Valley Authority (Parts 1300—1399)

Title 19—Customs Duties

I United States Customs Service, Department of the Treasury (Parts 1—199)

Title 19—Customs Duties—Continued

Chap.

II United States International Trade Commission (Parts 200—299)

III International Trade Administration, Department of Commerce (Parts 300—399)

Title 20—Employees' Benefits

I Office of Workers' Compensation Programs, Department of Labor (Parts 1—199)

II Railroad Retirement Board (Parts 200—399)

III Social Security Administration (Parts 400—499)

IV Employees' Compensation Appeals Board, Department of Labor (Parts 500—599)

V Employment and Training Administration, Department of Labor (Parts 600—699)

VI Employment Standards Administration, Department of Labor (Parts 700—799)

VII Benefits Review Board, Department of Labor (Parts 800—899)

VIII Joint Board for the Enrollment of Actuaries (Parts 900—999)

IX Office of the Assistant Secretary for Veterans' Employment and Training, Department of Labor (Parts 1000—1099)

Title 21—Food and Drugs

I Food and Drug Administration, Department of Health and Human Services (Parts 1—1299)

II Drug Enforcement Administration, Department of Justice (Parts 1300—1399)

III Office of National Drug Control Policy (Parts 1400—1499)

Title 22—Foreign Relations

I Department of State (Parts 1—199)

II Agency for International Development (Parts 200—299)

III Peace Corps (Parts 300—399)

IV International Joint Commission, United States and Canada (Parts 400—499)

V Broadcasting Board of Governors (Parts 500—599)

VII Overseas Private Investment Corporation (Parts 700—799)

IX Foreign Service Grievance Board (Parts 900—999)

X Inter-American Foundation (Parts 1000—1099)

XI International Boundary and Water Commission, United States and Mexico, United States Section (Parts 1100—1199)

XII United States International Development Cooperation Agency (Parts 1200—1299)

XIV Foreign Service Labor Relations Board; Federal Labor Relations Authority; General Counsel of the Federal Labor Relations Authority; and the Foreign Service Impasse Disputes Panel (Parts 1400—1499)

Title 22—Foreign Relations—Continued

Chap.

XV African Development Foundation (Parts 1500—1599)

XVI Japan-United States Friendship Commission (Parts 1600—1699)

XVII United States Institute of Peace (Parts 1700—1799)

Title 23—Highways

I Federal Highway Administration, Department of Transportation (Parts 1—999)

II National Highway Traffic Safety Administration and Federal Highway Administration, Department of Transportation (Parts 1200—1299)

III National Highway Traffic Safety Administration, Department of Transportation (Parts 1300—1399)

Title 24—Housing and Urban Development

SUBTITLE A—OFFICE OF THE SECRETARY, DEPARTMENT OF HOUSING AND URBAN DEVELOPMENT (PARTS 0—99)

SUBTITLE B—REGULATIONS RELATING TO HOUSING AND URBAN DEVELOPMENT

I Office of Assistant Secretary for Equal Opportunity, Department of Housing and Urban Development (Parts 100—199)

II Office of Assistant Secretary for Housing-Federal Housing Commissioner, Department of Housing and Urban Development (Parts 200—299)

III Government National Mortgage Association, Department of Housing and Urban Development (Parts 300—399)

IV Office of Housing and Office of Multifamily Housing Assistance Restructuring, Department of Housing and Urban Development (Parts 400—499)

V Office of Assistant Secretary for Community Planning and Development, Department of Housing and Urban Development (Parts 500—599)

VI Office of Assistant Secretary for Community Planning and Development, Department of Housing and Urban Development (Parts 600—699) [Reserved]

VII Office of the Secretary, Department of Housing and Urban Development (Housing Assistance Programs and Public and Indian Housing Programs) (Parts 700—799)

VIII Office of the Assistant Secretary for Housing—Federal Housing Commissioner, Department of Housing and Urban Development (Section 8 Housing Assistance Programs, Section 202 Direct Loan Program, Section 202 Supportive Housing for the Elderly Program and Section 811 Supportive Housing for Persons With Disabilities Program) (Parts 800—899)

IX Office of Assistant Secretary for Public and Indian Housing, Department of Housing and Urban Development (Parts 900—1699)

X Office of Assistant Secretary for Housing—Federal Housing Commissioner, Department of Housing and Urban Development (Interstate Land Sales Registration Program) (Parts 1700—1799)

Title 24—Housing and Urban Development—Continued

Chap.

XII Office of Inspector General, Department of Housing and Urban Development (Parts 2000—2099)

XX Office of Assistant Secretary for Housing—Federal Housing Commissioner, Department of Housing and Urban Development (Parts 3200—3899)

XXV Neighborhood Reinvestment Corporation (Parts 4100—4199)

Title 25—Indians

I Bureau of Indian Affairs, Department of the Interior (Parts 1—299)

II Indian Arts and Crafts Board, Department of the Interior (Parts 300—399)

III National Indian Gaming Commission, Department of the Interior (Parts 500—599)

IV Office of Navajo and Hopi Indian Relocation (Parts 700—799)

V Bureau of Indian Affairs, Department of the Interior, and Indian Health Service, Department of Health and Human Services (Part 900)

VI Office of the Assistant Secretary-Indian Affairs, Department of the Interior (Parts 1000—1199)

VII Office of the Special Trustee for American Indians, Department of the Interior (Part 1200)

Title 26—Internal Revenue

I Internal Revenue Service, Department of the Treasury (Parts 1—899)

Title 27—Alcohol, Tobacco Products and Firearms

I Alcohol and Tobacco Tax and Trade Bureau, Department of the Treasury (Parts 1—299)

II Bureau of Alcohol, Tobacco, Firearms, and Explosives, Department of Justice (Parts 400—699)

Title 28—Judicial Administration

I Department of Justice (Parts 0—299)

III Federal Prison Industries, Inc., Department of Justice (Parts 300—399)

V Bureau of Prisons, Department of Justice (Parts 500—599)

VI Offices of Independent Counsel, Department of Justice (Parts 600—699)

VII Office of Independent Counsel (Parts 700—799)

VIII Court Services and Offender Supervision Agency for the District of Columbia (Parts 800—899)

IX National Crime Prevention and Privacy Compact Council (Parts 900—999)

Title 28—Judicial Administration—Continued

Chap.

XI Department of Justice and Department of State (Parts 1100—1199)

Title 29—Labor

SUBTITLE A—OFFICE OF THE SECRETARY OF LABOR (PARTS 0—99)

SUBTITLE B—REGULATIONS RELATING TO LABOR

I National Labor Relations Board (Parts 100—199)

II Office of Labor-Management Standards, Department of Labor (Parts 200—299)

III National Railroad Adjustment Board (Parts 300—399)

IV Office of Labor-Management Standards, Department of Labor (Parts 400—499)

V Wage and Hour Division, Department of Labor (Parts 500—899)

IX Construction Industry Collective Bargaining Commission (Parts 900—999)

X National Mediation Board (Parts 1200—1299)

XII Federal Mediation and Conciliation Service (Parts 1400—1499)

XIV Equal Employment Opportunity Commission (Parts 1600—1699)

XVII Occupational Safety and Health Administration, Department of Labor (Parts 1900—1999)

XX Occupational Safety and Health Review Commission (Parts 2200—2499)

XXV Employee Benefits Security Administration, Department of Labor (Parts 2500—2599)

XXVII Federal Mine Safety and Health Review Commission (Parts 2700—2799)

XL Pension Benefit Guaranty Corporation (Parts 4000—4999)

Title 30—Mineral Resources

I Mine Safety and Health Administration, Department of Labor (Parts 1—199)

II Minerals Management Service, Department of the Interior (Parts 200—299)

III Board of Surface Mining and Reclamation Appeals, Department of the Interior (Parts 300—399)

IV Geological Survey, Department of the Interior (Parts 400—499)

VII Office of Surface Mining Reclamation and Enforcement, Department of the Interior (Parts 700—999)

Title 31—Money and Finance: Treasury

SUBTITLE A—OFFICE OF THE SECRETARY OF THE TREASURY (PARTS 0—50)

SUBTITLE B—REGULATIONS RELATING TO MONEY AND FINANCE

I Monetary Offices, Department of the Treasury (Parts 51—199)

II Fiscal Service, Department of the Treasury (Parts 200—399)

Title 31—Money and Finance: Treasury—Continued

Chap.

IV Secret Service, Department of the Treasury (Parts 400—499)

V Office of Foreign Assets Control, Department of the Treasury (Parts 500—599)

VI Bureau of Engraving and Printing, Department of the Treasury (Parts 600—699)

VII Federal Law Enforcement Training Center, Department of the Treasury (Parts 700—799)

VIII Office of International Investment, Department of the Treasury (Parts 800—899)

IX Federal Claims Collection Standards (Department of the Treasury—Department of Justice) (Parts 900—999)

Title 32—National Defense

SUBTITLE A—DEPARTMENT OF DEFENSE

I Office of the Secretary of Defense (Parts 1—399)

V Department of the Army (Parts 400—699)

VI Department of the Navy (Parts 700—799)

VII Department of the Air Force (Parts 800—1099)

SUBTITLE B—OTHER REGULATIONS RELATING TO NATIONAL DEFENSE

XII Defense Logistics Agency (Parts 1200—1299)

XVI Selective Service System (Parts 1600—1699)

XVIII National Counterintelligence Center (Parts 1800—1899)

XIX Central Intelligence Agency (Parts 1900—1999)

XX Information Security Oversight Office, National Archives and Records Administration (Parts 2000—2099)

XXI National Security Council (Parts 2100—2199)

XXIV Office of Science and Technology Policy (Parts 2400—2499)

XXVII Office for Micronesian Status Negotiations (Parts 2700—2799)

XXVIII Office of the Vice President of the United States (Parts 2800—2899)

Title 33—Navigation and Navigable Waters

I Coast Guard, Department of Transportation (Parts 1—199)

II Corps of Engineers, Department of the Army (Parts 200—399)

IV Saint Lawrence Seaway Development Corporation, Department of Transportation (Parts 400—499)

Title 34—Education

SUBTITLE A—OFFICE OF THE SECRETARY, DEPARTMENT OF EDUCATION (PARTS 1—99)

SUBTITLE B—REGULATIONS OF THE OFFICES OF THE DEPARTMENT OF EDUCATION

I Office for Civil Rights, Department of Education (Parts 100—199)

Title 34—Education—Continued

Chap.

II Office of Elementary and Secondary Education, Department of Education (Parts 200—299)

III Office of Special Education and Rehabilitative Services, Department of Education (Parts 300—399)

IV Office of Vocational and Adult Education, Department of Education (Parts 400—499)

V Office of Bilingual Education and Minority Languages Affairs, Department of Education (Parts 500—599)

VI Office of Postsecondary Education, Department of Education (Parts 600—699)

XI National Institute for Literacy (Parts 1100—1199)

SUBTITLE C—REGULATIONS RELATING TO EDUCATION

XII National Council on Disability (Parts 1200—1299)

Title 35—Panama Canal

I Panama Canal Regulations (Parts 1—299)

Title 36—Parks, Forests, and Public Property

I National Park Service, Department of the Interior (Parts 1—199)

II Forest Service, Department of Agriculture (Parts 200—299)

III Corps of Engineers, Department of the Army (Parts 300—399)

IV American Battle Monuments Commission (Parts 400—499)

V Smithsonian Institution (Parts 500—599)

VII Library of Congress (Parts 700—799)

VIII Advisory Council on Historic Preservation (Parts 800—899)

IX Pennsylvania Avenue Development Corporation (Parts 900—999)

X Presidio Trust (Parts 1000—1099)

XI Architectural and Transportation Barriers Compliance Board (Parts 1100—1199)

XII National Archives and Records Administration (Parts 1200—1299)

XV Oklahoma City National Memorial Trust (Part 1501)

XVI Morris K. Udall Scholarship and Excellence in National Environmental Policy Foundation (Parts 1600—1699)

Title 37—Patents, Trademarks, and Copyrights

I United States Patent and Trademark Office, Department of Commerce (Parts 1—199)

II Copyright Office, Library of Congress (Parts 200—299)

IV Assistant Secretary for Technology Policy, Department of Commerce (Parts 400—499)

V Under Secretary for Technology, Department of Commerce (Parts 500—599)

Title 38—Pensions, Bonuses, and Veterans' Relief

Chap.

I Department of Veterans Affairs (Parts 0—99)

Title 39—Postal Service

I United States Postal Service (Parts 1—999)

III Postal Rate Commission (Parts 3000—3099)

Title 40—Protection of Environment

I Environmental Protection Agency (Parts 1—799)

IV Environmental Protection Agency and Department of Justice (Parts 1400—1499)

V Council on Environmental Quality (Parts 1500—1599)

VI Chemical Safety and Hazard Investigation Board (Parts 1600—1699)

VII Environmental Protection Agency and Department of Defense; Uniform National Discharge Standards for Vessels of the Armed Forces (Parts 1700—1799)

Title 41—Public Contracts and Property Management

SUBTITLE B—OTHER PROVISIONS RELATING TO PUBLIC CONTRACTS

50 Public Contracts, Department of Labor (Parts 50–1—50–999)

51 Committee for Purchase From People Who Are Blind or Severely Disabled (Parts 51–1—51–99)

60 Office of Federal Contract Compliance Programs, Equal Employment Opportunity, Department of Labor (Parts 60–1—60–999)

61 Office of the Assistant Secretary for Veterans' Employment and Training Service, Department of Labor (Parts 61–1—61–999)

SUBTITLE C—FEDERAL PROPERTY MANAGEMENT REGULATIONS SYSTEM

101 Federal Property Management Regulations (Parts 101–1—101–99)

102 Federal Management Regulation (Parts 102–1—102–299)

105 General Services Administration (Parts 105–1—105–999)

109 Department of Energy Property Management Regulations (Parts 109–1—109–99)

114 Department of the Interior (Parts 114–1—114–99)

115 Environmental Protection Agency (Parts 115–1—115–99)

128 Department of Justice (Parts 128–1—128–99)

SUBTITLE D—OTHER PROVISIONS RELATING TO PROPERTY MANAGEMENT [RESERVED]

SUBTITLE E—FEDERAL INFORMATION RESOURCES MANAGEMENT REGULATIONS SYSTEM

201 Federal Information Resources Management Regulation (Parts 201–1—201–99) [Reserved]

SUBTITLE F—FEDERAL TRAVEL REGULATION SYSTEM

300 General (Parts 300–1—300–99)

301 Temporary Duty (TDY) Travel Allowances (Parts 301–1—301–99)

Chap.

302 Relocation Allowances (Parts 302–1—302–99)

303 Payment of Expenses Connected with the Death of Certain Employees (Part 303–70)

304 Payment of Travel Expenses from a Non-Federal Source (Parts 304–1—304–99)

Title 42—Public Health

I Public Health Service, Department of Health and Human Services (Parts 1—199)

IV Centers for Medicare & Medicaid Services, Department of Health and Human Services (Parts 400—499)

V Office of Inspector General-Health Care, Department of Health and Human Services (Parts 1000—1999)

Title 43—Public Lands: Interior

SUBTITLE A—OFFICE OF THE SECRETARY OF THE INTERIOR (PARTS 1—199)

SUBTITLE B—REGULATIONS RELATING TO PUBLIC LANDS

I Bureau of Reclamation, Department of the Interior (Parts 200—499)

II Bureau of Land Management, Department of the Interior (Parts 1000—9999)

III Utah Reclamation Mitigation and Conservation Commission (Parts 10000—10005)

Title 44—Emergency Management and Assistance

I Federal Emergency Management Agency, Department of Homeland Security (Parts 0—399)

IV Department of Commerce and Department of Transportation (Parts 400—499)

Title 45—Public Welfare

SUBTITLE A—DEPARTMENT OF HEALTH AND HUMAN SERVICES (PARTS 1—199)

SUBTITLE B—REGULATIONS RELATING TO PUBLIC WELFARE

II Office of Family Assistance (Assistance Programs), Administration for Children and Families, Department of Health and Human Services (Parts 200—299)

III Office of Child Support Enforcement (Child Support Enforcement Program), Administration for Children and Families, Department of Health and Human Services (Parts 300—399)

IV Office of Refugee Resettlement, Administration for Children and Families Department of Health and Human Services (Parts 400—499)

V Foreign Claims Settlement Commission of the United States, Department of Justice (Parts 500—599)

Title 45—Public Welfare—Continued

Chap.

VI National Science Foundation (Parts 600—699)

VII Commission on Civil Rights (Parts 700—799)

VIII Office of Personnel Management (Parts 800—899)

X Office of Community Services, Administration for Children and Families, Department of Health and Human Services (Parts 1000—1099)

XI National Foundation on the Arts and the Humanities (Parts 1100—1199)

XII Corporation for National and Community Service (Parts 1200—1299)

XIII Office of Human Development Services, Department of Health and Human Services (Parts 1300—1399)

XVI Legal Services Corporation (Parts 1600—1699)

XVII National Commission on Libraries and Information Science (Parts 1700—1799)

XVIII Harry S. Truman Scholarship Foundation (Parts 1800—1899)

XXI Commission on Fine Arts (Parts 2100—2199)

XXIII Arctic Research Commission (Part 2301)

XXIV James Madison Memorial Fellowship Foundation (Parts 2400—2499)

XXV Corporation for National and Community Service (Parts 2500—2599)

Title 46—Shipping

I Coast Guard, Department of Transportation (Parts 1—199)

II Maritime Administration, Department of Transportation (Parts 200—399)

III Coast Guard (Great Lakes Pilotage), Department of Transportation (Parts 400—499)

IV Federal Maritime Commission (Parts 500—599)

Title 47—Telecommunication

I Federal Communications Commission (Parts 0—199)

II Office of Science and Technology Policy and National Security Council (Parts 200—299)

III National Telecommunications and Information Administration, Department of Commerce (Parts 300—399)

Title 48—Federal Acquisition Regulations System

1 Federal Acquisition Regulation (Parts 1—99)

2 Department of Defense (Parts 200—299)

3 Department of Health and Human Services (Parts 300—399)

4 Department of Agriculture (Parts 400—499)

5 General Services Administration (Parts 500—599)

6 Department of State (Parts 600—699)

Title 48—Federal Acquisition Regulations System—Continued

Chap.

7 United States Agency for International Development (Parts 700—799)

8 Department of Veterans Affairs (Parts 800—899)

9 Department of Energy (Parts 900—999)

10 Department of the Treasury (Parts 1000—1099)

12 Department of Transportation (Parts 1200—1299)

13 Department of Commerce (Parts 1300—1399)

14 Department of the Interior (Parts 1400—1499)

15 Environmental Protection Agency (Parts 1500—1599)

16 Office of Personnel Management Federal Employees Health Benefits Acquisition Regulation (Parts 1600—1699)

17 Office of Personnel Management (Parts 1700—1799)

18 National Aeronautics and Space Administration (Parts 1800—1899)

19 Broadcasting Board of Governors (Parts 1900—1999)

20 Nuclear Regulatory Commission (Parts 2000—2099)

21 Office of Personnel Management, Federal Employees Group Life Insurance Federal Acquisition Regulation (Parts 2100—2199)

23 Social Security Administration (Parts 2300—2399)

24 Department of Housing and Urban Development (Parts 2400—2499)

25 National Science Foundation (Parts 2500—2599)

28 Department of Justice (Parts 2800—2899)

29 Department of Labor (Parts 2900—2999)

34 Department of Education Acquisition Regulation (Parts 3400—3499)

35 Panama Canal Commission (Parts 3500—3599)

44 Federal Emergency Management Agency (Parts 4400—4499)

51 Department of the Army Acquisition Regulations (Parts 5100—5199)

52 Department of the Navy Acquisition Regulations (Parts 5200—5299)

53 Department of the Air Force Federal Acquisition Regulation Supplement (Parts 5300—5399)

54 Defense Logistics Agency, Department of Defense (Parts 5400—5499)

57 African Development Foundation (Parts 5700—5799)

61 General Services Administration Board of Contract Appeals (Parts 6100—6199)

63 Department of Transportation Board of Contract Appeals (Parts 6300—6399)

99 Cost Accounting Standards Board, Office of Federal Procurement Policy, Office of Management and Budget (Parts 9900—9999)

Title 49—Transportation

Chap.

SUBTITLE A—OFFICE OF THE SECRETARY OF TRANSPORTATION (PARTS 1—99)

SUBTITLE B—OTHER REGULATIONS RELATING TO TRANSPORTATION

I Research and Special Programs Administration, Department of Transportation (Parts 100—199)

II Federal Railroad Administration, Department of Transportation (Parts 200—299)

III Federal Motor Carrier Safety Administration, Department of Transportation (Parts 300—399)

IV Coast Guard, Department of Transportation (Parts 400—499)

V National Highway Traffic Safety Administration, Department of Transportation (Parts 500—599)

VI Federal Transit Administration, Department of Transportation (Parts 600—699)

VII National Railroad Passenger Corporation (AMTRAK) (Parts 700—799)

VIII National Transportation Safety Board (Parts 800—999)

X Surface Transportation Board, Department of Transportation (Parts 1000—1399)

XI Bureau of Transportation Statistics, Department of Transportation (Parts 1400—1499)

XII Transportation Security Administration, Department of Transportation (Parts 1500—1599)

Title 50—Wildlife and Fisheries

I United States Fish and Wildlife Service, Department of the Interior (Parts 1—199)

II National Marine Fisheries Service, National Oceanic and Atmospheric Administration, Department of Commerce (Parts 200—299)

III International Fishing and Related Activities (Parts 300—399)

IV Joint Regulations (United States Fish and Wildlife Service, Department of the Interior and National Marine Fisheries Service, National Oceanic and Atmospheric Administration, Department of Commerce); Endangered Species Committee Regulations (Parts 400—499)

V Marine Mammal Commission (Parts 500—599)

VI Fishery Conservation and Management, National Oceanic and Atmospheric Administration, Department of Commerce (Parts 600—699)

CFR Index and Finding Aids

Subject/Agency Index

List of Agency Prepared Indexes

Parallel Tables of Statutory Authorities and Rules

List of CFR Titles, Chapters, Subchapters, and Parts

Alphabetical List of Agencies Appearing in the CFR

Alphabetical List of Agencies Appearing in the CFR

(Revised as of July 1, 2003)

Agency	CFR Title, Subtitle or Chapter
Administrative Committee of the Federal Register	1, I
Advanced Research Projects Agency	32, I
Advisory Council on Historic Preservation	36, VIII
African Development Foundation	22, XV
Federal Acquisition Regulation	48, 57
Agency for International Development, United States	22, II
Federal Acquisition Regulation	48, 7
Agricultural Marketing Service	7, I, IX, X, XI
Agricultural Research Service	7, V
Agriculture Department	5, LXXIII
Agricultural Marketing Service	7, I, IX, X, XI
Agricultural Research Service	7, V
Animal and Plant Health Inspection Service	7, III; 9, I
Chief Financial Officer, Office of	7, XXX
Commodity Credit Corporation	7, XIV
Cooperative State Research, Education, and Extension Service	7, XXXIV
Economic Research Service	7, XXXVII
Energy, Office of	7, XXIX
Environmental Quality, Office of	7, XXXI
Farm Service Agency	7, VII, XVIII
Federal Acquisition Regulation	48, 4
Federal Crop Insurance Corporation	7, IV
Food and Nutrition Service	7, II
Food Safety and Inspection Service	9, III
Foreign Agricultural Service	7, XV
Forest Service	36, II
Grain Inspection, Packers and Stockyards Administration	7, VIII; 9, II
Information Resources Management, Office of	7, XXVII
Inspector General, Office of	7, XXVI
National Agricultural Library	7, XLI
National Agricultural Statistics Service	7, XXXVI
Natural Resources Conservation Service	7, VI
Operations, Office of	7, XXVIII
Procurement and Property Management, Office of	7, XXXII
Rural Business-Cooperative Service	7, XVIII, XLII
Rural Development Administration	7, XLII
Rural Housing Service	7, XVIII, XXXV
Rural Telephone Bank	7, XVI
Rural Utilities Service	7, XVII, XVIII, XLII
Secretary of Agriculture, Office of	7, Subtitle A
Transportation, Office of	7, XXXIII
World Agricultural Outlook Board	7, XXXVIII
Air Force Department	32, VII
Federal Acquisition Regulation Supplement	48, 53
Air Transportation Stabilization Board	14, VI
Alcohol and Tobacco Tax and Trade Bureau	27, I
Alcohol, Tobacco, Firearms, and Explosives, Bureau of	27, II
AMTRAK	49, VII
American Battle Monuments Commission	36, IV
American Indians, Office of the Special Trustee	25, VII
Animal and Plant Health Inspection Service	7, III; 9, I
Appalachian Regional Commission	5, IX

Agency	CFR Title, Subtitle or Chapter
Architectural and Transportation Barriers Compliance Board	36, XI
Arctic Research Commission	45, XXIII
Armed Forces Retirement Home	5, XI
Army Department	32, V
Engineers, Corps of	33, II; 36, III
Federal Acquisition Regulation	48, 51
Benefits Review Board	20, VII
Bilingual Education and Minority Languages Affairs, Office of	34, V
Blind or Severely Disabled, Committee for Purchase From People Who Are	41, 51
Broadcasting Board of Governors	22, V
Federal Acquisition Regulation	48, 19
Census Bureau	15, I
Centers for Medicare & Medicaid Services	42, IV
Central Intelligence Agency	32, XIX
Chief Financial Officer, Office of	7, XXX
Child Support Enforcement, Office of	45, III
Children and Families, Administration for	45, II, III, IV, X
Civil Rights, Commission on	45, VII
Civil Rights, Office for	34, I
Coast Guard	33, I; 46, I; 49, IV
Coast Guard (Great Lakes Pilotage)	46, III
Commerce Department	44, IV
Census Bureau	15, I
Economic Affairs, Under Secretary	37, V
Economic Analysis, Bureau of	15, VIII
Economic Development Administration	13, III
Emergency Management and Assistance	44, IV
Federal Acquisition Regulation	48, 13
Fishery Conservation and Management	50, VI
Foreign-Trade Zones Board	15, IV
Industry and Security, Bureau of	15, VII
International Trade Administration	15, III; 19, III
National Institute of Standards and Technology	15, II
National Marine Fisheries Service	50, II, IV, VI
National Oceanic and Atmospheric Administration	15, IX; 50, II, III, IV, VI
National Telecommunications and Information Administration	15, XXIII; 47, III
National Weather Service	15, IX
Patent and Trademark Office, United States	37, I
Productivity, Technology and Innovation, Assistant Secretary for	37, IV
Secretary of Commerce, Office of	15, Subtitle A
Technology, Under Secretary for	37, V
Technology Administration	15, XI
Technology Policy, Assistant Secretary for	37, IV
Commercial Space Transportation	14, III
Commodity Credit Corporation	7, XIV
Commodity Futures Trading Commission	5, XLI; 17, I
Community Planning and Development, Office of Assistant Secretary for	24, V, VI
Community Services, Office of	45, X
Comptroller of the Currency	12, I
Construction Industry Collective Bargaining Commission	29, IX
Consumer Product Safety Commission	5, LXXI; 16, II
Cooperative State Research, Education, and Extension Service	7, XXXIV
Copyright Office	37, II
Corporation for National and Community Service	45, XII, XXV
Cost Accounting Standards Board	48, 99
Council on Environmental Quality	40, V
Court Services and Offender Supervision Agency for the District of Columbia	28, VIII
Customs Service, United States	19, I
Defense Contract Audit Agency	32, I
Defense Department	5, XXVI; 32, Subtitle A; 40, VII

Agency	CFR Title, Subtitle or Chapter
Advanced Research Projects Agency	32, I
Air Force Department	32, VII
Army Department	32, V; 33, II; 36, III, 48, 51
Defense Intelligence Agency	32, I
Defense Logistics Agency	32, I, XII; 48, 54
Engineers, Corps of	33, II; 36, III
Federal Acquisition Regulation	48, 2
National Imagery and Mapping Agency	32, I
Navy Department	32, VI; 48, 52
Secretary of Defense, Office of	32, I
Defense Contract Audit Agency	32, I
Defense Intelligence Agency	32, I
Defense Logistics Agency	32, XII; 48, 54
Defense Nuclear Facilities Safety Board	10, XVII
Delaware River Basin Commission	18, III
District of Columbia, Court Services and Offender Supervision Agency for the	28, VIII
Drug Enforcement Administration	21, II
East-West Foreign Trade Board	15, XIII
Economic Affairs, Under Secretary	37, V
Economic Analysis, Bureau of	15, VIII
Economic Development Administration	13, III
Economic Research Service	7, XXXVII
Education, Department of	5, LIII
Bilingual Education and Minority Languages Affairs, Office of	34, V
Civil Rights, Office for	34, I
Educational Research and Improvement, Office of	34, VII
Elementary and Secondary Education, Office of	34, II
Federal Acquisition Regulation	48, 34
Postsecondary Education, Office of	34, VI
Secretary of Education, Office of	34, Subtitle A
Special Education and Rehabilitative Services, Office of	34, III
Vocational and Adult Education, Office of	34, IV
Educational Research and Improvement, Office of	34, VII
Elementary and Secondary Education, Office of	34, II
Emergency Oil and Gas Guaranteed Loan Board	13, V
Emergency Steel Guarantee Loan Board	13, IV
Employee Benefits Security Administration	29, XXV
Employees' Compensation Appeals Board	20, IV
Employees Loyalty Board	5, V
Employment and Training Administration	20, V
Employment Standards Administration	20, VI
Endangered Species Committee	50, IV
Energy, Department of	5, XXIII; 10, II, III, X
Federal Acquisition Regulation	48, 9
Federal Energy Regulatory Commission	5, XXIV; 18, I
Property Management Regulations	41, 109
Energy, Office of	7, XXIX
Engineers, Corps of	33, II; 36, III
Engraving and Printing, Bureau of	31, VI
Environmental Protection Agency	5, LIV; 40, I, IV, VII
Federal Acquisition Regulation	48, 15
Property Management Regulations	41, 115
Environmental Quality, Office of	7, XXXI
Equal Employment Opportunity Commission	5, LXII; 29, XIV
Equal Opportunity, Office of Assistant Secretary for	24, I
Executive Office of the President	3, I
Administration, Office of	5, XV
Environmental Quality, Council on	40, V
Management and Budget, Office of	5, III, LXXVII; 14, VI; 48, 99
National Drug Control Policy, Office of	21, III
National Security Council	32, XXI; 47, 2
Presidential Documents	3
Science and Technology Policy, Office of	32, XXIV; 47, II

Agency	CFR Title, Subtitle or Chapter
Trade Representative, Office of the United States	15, XX
Export-Import Bank of the United States	5, LII; 12, IV
Family Assistance, Office of	45, II
Farm Credit Administration	5, XXXI; 12, VI
Farm Credit System Insurance Corporation	5, XXX; 12, XIV
Farm Service Agency	7, VII, XVIII
Federal Acquisition Regulation	48, 1
Federal Aviation Administration	14, I
Commercial Space Transportation	14, III
Federal Claims Collection Standards	31, IX
Federal Communications Commission	5, XXIX; 47, I
Federal Contract Compliance Programs, Office of	41, 60
Federal Crop Insurance Corporation	7, IV
Federal Deposit Insurance Corporation	5, XXII; 12, III
Federal Election Commission	11, I
Federal Emergency Management Agency	44, I
Federal Acquisition Regulation	48, 44
Federal Employees Group Life Insurance Federal Acquisition Regulation	48, 21
Federal Employees Health Benefits Acquisition Regulation	48, 16
Federal Energy Regulatory Commission	5, XXIV; 18, I
Federal Financial Institutions Examination Council	12, XI
Federal Financing Bank	12, VIII
Federal Highway Administration	23, I, II
Federal Home Loan Mortgage Corporation	1, IV
Federal Housing Enterprise Oversight Office	12, XVII
Federal Housing Finance Board	12, IX
Federal Labor Relations Authority, and General Counsel of the Federal Labor Relations Authority	5, XIV; 22, XIV
Federal Law Enforcement Training Center	31, VII
Federal Management Regulation	41, 102
Federal Maritime Commission	46, IV
Federal Mediation and Conciliation Service	29, XII
Federal Mine Safety and Health Review Commission	5, LXXIV; 29, XXVII
Federal Motor Carrier Safety Administration	49, III
Federal Prison Industries, Inc.	28, III
Federal Procurement Policy Office	48, 99
Federal Property Management Regulations	41, 101
Federal Railroad Administration	49, II
Federal Register, Administrative Committee of	1, I
Federal Register, Office of	1, II
Federal Reserve System	12, II
Board of Governors	5, LVIII
Federal Retirement Thrift Investment Board	5, VI, LXXVI
Federal Service Impasses Panel	5, XIV
Federal Trade Commission	5, XLVII; 16, I
Federal Transit Administration	49, VI
Federal Travel Regulation System	41, Subtitle F
Fine Arts, Commission on	45, XXI
Fiscal Service	31, II
Fish and Wildlife Service, United States	50, I, IV
Fishery Conservation and Management	50, VI
Food and Drug Administration	21, I
Food and Nutrition Service	7, II
Food Safety and Inspection Service	9, III
Foreign Agricultural Service	7, XV
Foreign Assets Control, Office of	31, V
Foreign Claims Settlement Commission of the United States	45, V
Foreign Service Grievance Board	22, IX
Foreign Service Impasse Disputes Panel	22, XIV
Foreign Service Labor Relations Board	22, XIV
Foreign-Trade Zones Board	15, IV
Forest Service	36, II
General Accounting Office	4, I
General Services Administration	5, LVII; 41, 105
Contract Appeals, Board of	48, 61
Federal Acquisition Regulation	48, 5

Agency	CFR Title, Subtitle or Chapter
Federal Management Regulation	41, 102
Federal Property Management Regulations	41, 101
Federal Travel Regulation System	41, Subtitle F
General	41, 300
Payment From a Non-Federal Source for Travel Expenses	41, 304
Payment of Expenses Connected With the Death of Certain Employees	41, 303
Relocation Allowances	41, 302
Temporary Duty (TDY) Travel Allowances	41, 301
Geological Survey	30, IV
Government Ethics, Office of	5, XVI
Government National Mortgage Association	24, III
Grain Inspection, Packers and Stockyards Administration	7, VIII; 9, II
Harry S. Truman Scholarship Foundation	45, XVIII
Health and Human Services, Department of	5, XLV; 45, Subtitle A
Centers for Medicare & Medicaid Services	42, IV
Child Support Enforcement, Office of	45, III
Children and Families, Administration for	45, II, III, IV, X
Community Services, Office of	45, X
Family Assistance, Office of	45, II
Federal Acquisition Regulation	48, 3
Food and Drug Administration	21, I
Human Development Services, Office of	45, XIII
Indian Health Service	25, V; 42, I
Inspector General (Health Care), Office of	42, V
Public Health Service	42, I
Refugee Resettlement, Office of	45, IV
Homeland Security, Department of	6, I
Federal Emergency Management Agency	44, I
Immigration and Naturalization	8, I
Housing and Urban Development, Department of	5, LXV; 24, Subtitle B
Community Planning and Development, Office of Assistant Secretary for	24, V, VI
Equal Opportunity, Office of Assistant Secretary for	24, I
Federal Acquisition Regulation	48, 24
Federal Housing Enterprise Oversight, Office of	12, XVII
Government National Mortgage Association	24, III
Housing—Federal Housing Commissioner, Office of Assistant Secretary for	24, II, VIII, X, XX
Housing, Office of, and Multifamily Housing Assistance Restructuring, Office of	24, IV
Inspector General, Office of	24, XII
Public and Indian Housing, Office of Assistant Secretary for	24, IX
Secretary, Office of	24, Subtitle A, VII
Housing—Federal Housing Commissioner, Office of Assistant Secretary for	24, II, VIII, X, XX
Housing, Office of, and Multifamily Housing Assistance Restructuring, Office of	24, IV
Human Development Services, Office of	45, XIII
Immigration and Naturalization	8, I
Immigration Review, Executive Office for	8, V
Independent Counsel, Office of	28, VII
Indian Affairs, Bureau of	25, I, V
Indian Affairs, Office of the Assistant Secretary	25, VI
Indian Arts and Crafts Board	25, II
Indian Health Service	25, V; 42, I
Industry and Security, Bureau of	15, VII
Information Resources Management, Office of	7, XXVII
Information Security Oversight Office, National Archives and Records Administration	32, XX
Inspector General	
Agriculture Department	7, XXVI
Health and Human Services Department	42, V
Housing and Urban Development Department	24, XII
Institute of Peace, United States	22, XVII
Inter-American Foundation	5, LXIII; 22, X
Interior Department	

Agency	CFR Title, Subtitle or Chapter
American Indians, Office of the Special Trustee	25, VII
Endangered Species Committee	50, IV
Federal Acquisition Regulation	48, 14
Federal Property Management Regulations System	41, 114
Fish and Wildlife Service, United States	50, I, IV
Geological Survey	30, IV
Indian Affairs, Bureau of	25, I, V
Indian Affairs, Office of the Assistant Secretary	25, VI
Indian Arts and Crafts Board	25, II
Land Management, Bureau of	43, II
Minerals Management Service	30, II
National Indian Gaming Commission	25, III
National Park Service	36, I
Reclamation, Bureau of	43, I
Secretary of the Interior, Office of	43, Subtitle A
Surface Mining and Reclamation Appeals, Board of	30, III
Surface Mining Reclamation and Enforcement, Office of	30, VII
Internal Revenue Service	26, I
International Boundary and Water Commission, United States and Mexico, United States Section	22, XI
International Development, United States Agency for	22, II
Federal Acquisition Regulation	48, 7
International Development Cooperation Agency, United States	22, XII
International Fishing and Related Activities	50, III
International Investment, Office of	31, VIII
International Joint Commission, United States and Canada	22, IV
International Organizations Employees Loyalty Board	5, V
International Trade Administration	15, III; 19, III
International Trade Commission, United States	19, II
Interstate Commerce Commission	5, XL
James Madison Memorial Fellowship Foundation	45, XXIV
Japan–United States Friendship Commission	22, XVI
Joint Board for the Enrollment of Actuaries	20, VIII
Justice Department	5, XXVIII; 28, I, XI; 40, IV
Alcohol, Tobacco, Firearms, and Explosives, Bureau of	27, II
Drug Enforcement Administration	21, II
Federal Acquisition Regulation	48, 28
Federal Claims Collection Standards	31, IX
Federal Prison Industries, Inc.	28, III
Foreign Claims Settlement Commission of the United States	45, V
Immigration Review, Executive Office for	8, V
Offices of Independent Counsel	28, VI
Prisons, Bureau of	28, V
Property Management Regulations	41, 128
Labor Department	5, XLII
Benefits Review Board	20, VII
Employee Benefits Security Administration	29, XXV
Employees' Compensation Appeals Board	20, IV
Employment and Training Administration	20, V
Employment Standards Administration	20, VI
Federal Acquisition Regulation	48, 29
Federal Contract Compliance Programs, Office of	41, 60
Federal Procurement Regulations System	41, 50
Labor-Management Standards, Office of	29, II, IV
Mine Safety and Health Administration	30, I
Occupational Safety and Health Administration	29, XVII
Public Contracts	41, 50
Secretary of Labor, Office of	29, Subtitle A
Veterans' Employment and Training Service, Office of the Assistant Secretary for	41, 61; 20, IX
Wage and Hour Division	29, V
Workers' Compensation Programs, Office of	20, I
Labor-Management Standards, Office of	29, II, IV
Land Management, Bureau of	43, II

Agency	CFR Title, Subtitle or Chapter
Legal Services Corporation	45, XVI
Library of Congress	36, VII
Copyright Office	37, II
Local Television Loan Guarantee Board	7, XX
Management and Budget, Office of	5, III, LXXVII; 14, VI; 48, 99
Marine Mammal Commission	50, V
Maritime Administration	46, II
Merit Systems Protection Board	5, II
Micronesian Status Negotiations, Office for	32, XXVII
Mine Safety and Health Administration	30, I
Minerals Management Service	30, II
Minority Business Development Agency	15, XIV
Miscellaneous Agencies	1, IV
Monetary Offices	31, I
Morris K. Udall Scholarship and Excellence in National Environmental Policy Foundation	36, XVI
National Aeronautics and Space Administration	5, LIX; 14, V
Federal Acquisition Regulation	48, 18
National Agricultural Library	7, XLI
National Agricultural Statistics Service	7, XXXVI
National and Community Service, Corporation for	45, XII, XXV
National Archives and Records Administration	5, LXVI; 36, XII
Information Security Oversight Office	32, XX
National Bureau of Standards	15, II
National Capital Planning Commission	1, IV
National Commission for Employment Policy	1, IV
National Commission on Libraries and Information Science	45, XVII
National Council on Disability	34, XII
National Counterintelligence Center	32, XVIII
National Credit Union Administration	12, VII
National Crime Prevention and Privacy Compact Council	28, IX
National Drug Control Policy, Office of	21, III
National Foundation on the Arts and the Humanities	45, XI
National Highway Traffic Safety Administration	23, II, III; 49, V
National Imagery and Mapping Agency	32, I
National Indian Gaming Commission	25, III
National Institute for Literacy	34, XI
National Institute of Standards and Technology	15, II
National Labor Relations Board	5, LXI; 29, I
National Marine Fisheries Service	50, II, IV, VI
National Mediation Board	29, X
National Oceanic and Atmospheric Administration	15, IX; 50, II, III, IV, VI
National Park Service	36, I
National Railroad Adjustment Board	29, III
National Railroad Passenger Corporation (AMTRAK)	49, VII
National Science Foundation	5, XLIII; 45, VI
Federal Acquisition Regulation	48, 25
National Security Council	32, XXI
National Security Council and Office of Science and Technology Policy	47, II
National Telecommunications and Information Administration	15, XXIII; 47, III
National Transportation Safety Board	49, VIII
National Weather Service	15, IX
Natural Resources Conservation Service	7, VI
Navajo and Hopi Indian Relocation, Office of	25, IV
Navy Department	32, VI
Federal Acquisition Regulation	48, 52
Neighborhood Reinvestment Corporation	24, XXV
Northeast Interstate Low-Level Radioactive Waste Commission	10, XVIII
Nuclear Regulatory Commission	5, XLVIII; 10, I
Federal Acquisition Regulation	48, 20
Occupational Safety and Health Administration	29, XVII
Occupational Safety and Health Review Commission	29, XX
Offices of Independent Counsel	28, VI

Agency	CFR Title, Subtitle or Chapter
Oklahoma City National Memorial Trust	36, XV
Operations Office	7, XXVIII
Overseas Private Investment Corporation	5, XXXIII; 22, VII
Panama Canal Commission	48, 35
Panama Canal Regulations	35, I
Patent and Trademark Office, United States	37, I
Payment From a Non-Federal Source for Travel Expenses	41, 304
Payment of Expenses Connected With the Death of Certain Employees	41, 303
Peace Corps	22, III
Pennsylvania Avenue Development Corporation	36, IX
Pension Benefit Guaranty Corporation	29, XL
Personnel Management, Office of	5, I, XXXV; 45, VIII
Federal Acquisition Regulation	48, 17
Federal Employees Group Life Insurance Federal Acquisition Regulation	48, 21
Federal Employees Health Benefits Acquisition Regulation	48, 16
Postal Rate Commission	5, XLVI; 39, III
Postal Service, United States	5, LX; 39, I
Postsecondary Education, Office of	34, VI
President's Commission on White House Fellowships	1, IV
Presidential Documents	3
Presidio Trust	36, X
Prisons, Bureau of	28, V
Procurement and Property Management, Office of	7, XXXII
Productivity, Technology and Innovation, Assistant Secretary	37, IV
Public Contracts, Department of Labor	41, 50
Public and Indian Housing, Office of Assistant Secretary for	24, IX
Public Health Service	42, I
Railroad Retirement Board	20, II
Reclamation, Bureau of	43, I
Refugee Resettlement, Office of	45, IV
Regional Action Planning Commissions	13, V
Relocation Allowances	41, 302
Research and Special Programs Administration	49, I
Rural Business-Cooperative Service	7, XVIII, XLII
Rural Development Administration	7, XLII
Rural Housing Service	7, XVIII, XXXV
Rural Telephone Bank	7, XVI
Rural Utilities Service	7, XVII, XVIII, XLII
Saint Lawrence Seaway Development Corporation	33, IV
Science and Technology Policy, Office of	32, XXIV
Science and Technology Policy, Office of, and National Security Council	47, II
Secret Service	31, IV
Securities and Exchange Commission	17, II
Selective Service System	32, XVI
Small Business Administration	13, I
Smithsonian Institution	36, V
Social Security Administration	20, III; 48, 23
Soldiers' and Airmen's Home, United States	5, XI
Special Counsel, Office of	5, VIII
Special Education and Rehabilitative Services, Office of	34, III
State Department	22, I; 28, XI
Federal Acquisition Regulation	48, 6
Surface Mining and Reclamation Appeals, Board of	30, III
Surface Mining Reclamation and Enforcement, Office of	30, VII
Surface Transportation Board	49, X
Susquehanna River Basin Commission	18, VIII
Technology Administration	15, XI
Technology Policy, Assistant Secretary for	37, IV
Technology, Under Secretary for	37, V
Tennessee Valley Authority	5, LXIX; 18, XIII
Thrift Supervision Office, Department of the Treasury	12, V
Trade Representative, United States, Office of	15, XX
Transportation, Department of	5, L

Agency	CFR Title, Subtitle or Chapter
Coast Guard	33, I; 46, I; 49, IV
Coast Guard (Great Lakes Pilotage)	46, III
Commercial Space Transportation	14, III
Contract Appeals, Board of	48, 63
Emergency Management and Assistance	44, IV
Federal Acquisition Regulation	48, 12
Federal Aviation Administration	14, I
Federal Highway Administration	23, I, II
Federal Motor Carrier Safety Administration	49, III
Federal Railroad Administration	49, II
Federal Transit Administration	49, VI
Maritime Administration	46, II
National Highway Traffic Safety Administration	23, II, III; 49, V
Research and Special Programs Administration	49, I
Saint Lawrence Seaway Development Corporation	33, IV
Secretary of Transportation, Office of	14, II; 49, Subtitle A
Surface Transportation Board	49, X
Transportation Security Administration	49, XII
Transportation Statistics Bureau	49, XI
Transportation, Office of	7, XXXIII
Transportation Security Administration	49, XII
Transportation Statistics Bureau	49, XI
Travel Allowances, Temporary Duty (TDY)	41, 301
Treasury Department	5, XXI; 12, XV; 17, IV; 31, IX
Alcohol and Tobacco Tax and Trade Bureau	27, I
Community Development Financial Institutions Fund	12, XVIII
Comptroller of the Currency	12, I
Customs Service, United States	19, I
Engraving and Printing, Bureau of	31, VI
Federal Acquisition Regulation	48, 10
Federal Law Enforcement Training Center	31, VII
Fiscal Service	31, II
Foreign Assets Control, Office of	31, V
Internal Revenue Service	26, I
International Investment, Office of	31, VIII
Monetary Offices	31, I
Secret Service	31, IV
Secretary of the Treasury, Office of	31, Subtitle A
Thrift Supervision, Office of	12, V
Truman, Harry S. Scholarship Foundation	45, XVIII
United States and Canada, International Joint Commission	22, IV
United States and Mexico, International Boundary and Water Commission, United States Section	22, XI
Utah Reclamation Mitigation and Conservation Commission	43, III
Veterans Affairs Department	38, I
Federal Acquisition Regulation	48, 8
Veterans' Employment and Training Service, Office of the Assistant Secretary for	41, 61; 20, IX
Vice President of the United States, Office of	32, XXVIII
Vocational and Adult Education, Office of	34, IV
Wage and Hour Division	29, V
Water Resources Council	18, VI
Workers' Compensation Programs, Office of	20, I
World Agricultural Outlook Board	7, XXXVIII

List of CFR Sections Affected

All changes in this volume of the Code of Federal Regulations which were made by documents published in the FEDERAL REGISTER since January 1, 2001, are enumerated in the following list. Entries indicate the nature of the changes effected. Page numbers refer to FEDERAL REGISTER pages. The user should consult the entries for chapters and parts as well as sections for revisions.

Title 40 was established at 36 FR 12213, June 29, 1971. For the period before January 1, 2001, see the ''List of CFR Sections Affected, 1964–1972, 1964–1972, 1973–1985, and 1986–2000'' published in ten separate volumes.

2001

40 CFR

66 FR Page

Chapter I

61 Delegation of authority 50110
61.04 (a), (b) and (c) table amended 32555
Regulation at 66 FR 32555 withdrawn 42425
(a), (b) and (c) table amended 42438
(b) amended; (c)(10) table revised 48216
62 State plan approval 23851
62.640 Undesignated center heading and section added 67098
62.1100 (b)(5)(i) added 48356
62.1125 Undesignated center heading and section added..... 67098
62.1500 (b)(2) added 63313
62.2850 (Subpart M) Added 67098
62.3335 Undesignated center heading and section added..... 59713
62.3913 (d) added 64154
62.3914 (d) added 64152
62.3915 Undesignated centerheading and section added..... 46961
62.4179 (d) added 65450
62.4180 Undesignated centerheading and section added..... 46961
62.6358 (d) added 52062
62.6359 Undesignated centerheading and section added..... 46961
62.6613 Undesignated center heading and section added..... 32556

40 CFR—Continued

66 FR Page

Chapter I—Continued

Regulation at 66 FR 32556 withdrawn 42425
Undesignated centerheading and section added 42439
62.6915 Undesignated centerheading and section added..... 46961
62.7125 Undesignated center heading and section added..... 67098
62.8106 Undesignated center heading and section added..... 41148
62.9640 Revised 43511
62.9642 Revised 43511
62.9825 Added 21096
62.9990 Added 21096
62.10100 (b)(5) and (c)(5) added 22929
Regulation at 66 FR 22929 withdrawn 35546
(b)(5) and (c)(5) added..... 48567
62.10170 Undesignated center heading and section added..... 22926
Regulation at 66 FR 22929 withdrawn 35546
Undesignated center heading and section added 48567
62.10850 (b)(4), (c)(3) and (4) added..... 49836
62.10910 Undesignated center heading and section added..... 49836
62.10911 Added 49836
62.11460 Undesignated center heading and section added..... 52537
62.11480 Undesignated center heading and section added..... 63940

40 CFR—Continued

66 FR Page

Chapter I—Continued

62.12125—62.12127 Undesignated center heading and sections added; eff. 7–23–01 28379
62.13105 Undesignated center heading and section added..... 54718
62.14400—62.14495 (Subpart HHH) Table 2 amended 34558

2002

40 CFR

67 FR Page

Chapter I

61 Technical correction..... 1295
Authority delegation notices 70170
61.04 (c)(10) table revised 3112
(b)(N) added; (b)(C), (MM) introductory text, (i) through (vii), (WW) and (C)(10) revised 11420
(a) amended; (b)(D), (F), (M) and (DD) revised; (AAA), (DDD), (EEE) and (c)(9) added 20673
(c)(10) table revised 39626
(c) table amended 62399
61.18 Introductory text, (a) introductory text, (c) and (d) introductory text revised..... 57166
61.93 (b) introductory text, (1)(i), (ii) and (2)(i) revised; (c) through (g) added..... 57166
61.107 (b) introductory text, (1)(i), (ii) and (2)(i) revised; (d) through (h) added..... 57167
61.340 (d) added 68531
61.341 Amended..... 68531
61.343 (a) introductory text revised; (a)(2) and (e) added..... 68532
61.345 (a)(3) revised 68532
61.356 (n) added 68533
61 Appendix B amended..... 57168
62 Corrected 11745
62.106 Undesignated center heading and section added 273
62.2609 Undesignated center heading and section added..... 273
62.3645 Undesignated center heading and section added..... 10622
62.4181 Undesignated center heading and section added 4181
62.4371 Undesignated center heading and section added..... 273
62.4980 Added 39629
62.5340 Undesignated center heading and section added..... 62896
62.5425 Undesignated center heading and section added..... 62896

40 CFR—Continued

67 FR Page

Chapter I—Continued

62.6126 Undesignated center heading and section added..... 67317
62.6360 Undesignated center heading and section added 4181
62.6916 Undesignated center heading and section added 4181
Corrected..... 13272
62.8855 Undesignated center heading and section added..... 61272
62.9600—62.9662 (Subpart NN) Heading added 22359
62.9650 Added 22359
62.9651 Added 22359
62.9652 Added 22359
62.9970 Undesignated center heading and section added..... 17946
62.9980 Undesignated center heading and section added..... 17946
62.10180 Undesignated center heading and section added..... 273
62.11100 Revised 35444
62.13106 Undesignated center heading and section added..... 41181
62.13107 Added 46600
62.13355 Undesignated center heading and secition added 76119

2003

(Regulations published from January 1, 2003, to July 1, 2003)

40 CFR

68 FR Page

Chapter I

61.04 (c)(1) added; eff. 7-28-03..... 31615
(c)(8) table amended 16728
(a), (b)(Q) and (R) amended 35792
61.343 Regulation at 67 FR 68532 withdrawn in part 6082
62.02 (b) revised 5158
62.10 Amended 35792
62.13 (d) and (e) added..... 5158
(a) amended 35792
62.107 Undesignated center heading and section added 4105
62.1100 (b)(6) and (c)(6) added; eff. 7–9–03..... 34333
62.1130 Undesignated center heading and section added; eff. 7–9–03..... 34334
62.1980 Undesignated center heading and section added 51
62.1985 Undesignated center heading and section added 49
62.2140 Undesignated center heading and section added 55

40 CFR—Continued

68 FR Page

Chapter I—Continued

62.2145 Undesignated center heading and section added 51
62.2150 Undesignated center heading and section added 53
62.2155 Undesignated center heading and section added 49
62.2380 Undesignated center heading and section added..... 17885
62.3625 (d) added 11474
62.3660 Undesignated center heading and section added; eff. 8–11–03 35183
62.4660 Undesignated center heading and section added; eff. 8–12–03 35302
62.4845 (b)(5) added 23211
62.6127 Undesignated center heading and section added; eff. 7-11-03..... 25293
62.7325 (b)(4) and (c)(4) added 6632
(b)(3) and (c)(3) added 6635
62.7405 Undesignated center heading and section added..... 10661
62.7455 Undesignated center heading and text added 6635
62.7460 Undesignated center heading and text added 6632
62.7603 Undesignated center heading and section added..... 10662
62.7860 Undesignated center heading and section added; eff. 8–12–03 35302
62.7870 Undesignated center heading and section added; eff. 8–12–03 35302

40 CFR—Continued

68 FR Page

Chapter I—Continued

62.7880 Undesignated center heading and section added; eff. 8–12–03 35302
62.7890 Undesignated center heading and section added; eff. 8–12–03 35302
62.8107 Undesignated center heading and section added..... 11981
62.9180 Undesignated center heading and section added; eff. 8–12–03 35303
62.9633 Added 55
62.9635 Added; eff. 8-25-03 37425
62.9636 Added; eff. 8-25-03 37425
62.9637 Added; eff. 8-25-03 37425
62.9645 Added 51
62.9646 Added 51
62.9670 Undesignated center heading and section added 49
62.9985 Undesignated center heading and section added..... 10664
62.11485 Undesignated center heading and section added; eff. 7-21-03..... 27913
62.12155 Undesignated center heading and section added..... 17741
62.12156 Added 17741
62.12157 Added 17741
62.12160 Undesignated center heading and section added; eff. 7-28-03..... 28774
62.13356 Undesignated center heading and section added 9022
62.15000—62.15410 (Subpart JJJ) Added 5158