AUTHENTICATED
U.S. GOVERNMENT
INFORMATION
GPO

Code of Federal Regulations

40

Part 790 to End

Revised as of July 1, 2003

Protection of Environment

Containing a codification of documents of general applicability and future effect

As of July 1, 2003

With Ancillaries

Published by
the Office of the Federal Register
National Archives and Records
Administration

A Special Edition of the Federal Register

U.S. GOVERNMENT PRINTING OFFICE
WASHINGTON : 2003

For sale by the Superintendent of Documents, U.S. Government Printing Office
Internet: bookstore.gpo.gov Phone: toll free (866) 512-1800; DC area (202) 512-1800
Fax: (202) 512-2250 Mail: Stop SSOP, Washington, DC 20402–0001

Table of Contents

	Page
Explanation	v
Title 40:	
Chapter I—Environmental Protection Agency (Continued)	3
Chapter IV—Environmental Protection Agency and Department of Justice	627
Chapter V—Council on Environmental Quality	633
Chapter VI—Chemical Safety and Hazard Investigation Board	679
Chapter VII—Environmental Protection Agency and Department of Defense; Uniform National Discharge Standards for Vessels of the Armed Forces	709
Finding Aids:	
Material Incorporated by Reference	721
Table of CFR Titles and Chapters	725
Alphabetical List of Agencies Appearing in the CFR	743
List of CFR Sections Affected	753

Cite this Code: CFR

To cite the regulations in this volume use title, part and section number. Thus, 40 CFR 790.1 *refers to title 40, part 790, section 1.*

Explanation

The Code of Federal Regulations is a codification of the general and permanent rules published in the Federal Register by the Executive departments and agencies of the Federal Government. The Code is divided into 50 titles which represent broad areas subject to Federal regulation. Each title is divided into chapters which usually bear the name of the issuing agency. Each chapter is further subdivided into parts covering specific regulatory areas.

Each volume of the Code is revised at least once each calendar year and issued on a quarterly basis approximately as follows:

Title 1 through Title 16.....as of January 1
Title 17 through Title 27.....as of April 1
Title 28 through Title 41.....as of July 1
Title 42 through Title 50.....as of October 1

The appropriate revision date is printed on the cover of each volume.

LEGAL STATUS

The contents of the Federal Register are required to be judicially noticed (44 U.S.C. 1507). The Code of Federal Regulations is prima facie evidence of the text of the original documents (44 U.S.C. 1510).

HOW TO USE THE CODE OF FEDERAL REGULATIONS

The Code of Federal Regulations is kept up to date by the individual issues of the Federal Register. These two publications must be used together to determine the latest version of any given rule.

To determine whether a Code volume has been amended since its revision date (in this case, July 1, 2003), consult the ''List of CFR Sections Affected (LSA),'' which is issued monthly, and the ''Cumulative List of Parts Affected,'' which appears in the Reader Aids section of the daily Federal Register. These two lists will identify the Federal Register page number of the latest amendment of any given rule.

EFFECTIVE AND EXPIRATION DATES

Each volume of the Code contains amendments published in the Federal Register since the last revision of that volume of the Code. Source citations for the regulations are referred to by volume number and page number of the Federal Register and date of publication. Publication dates and effective dates are usually not the same and care must be exercised by the user in determining the actual effective date. In instances where the effective date is beyond the cutoff date for the Code a note has been inserted to reflect the future effective date. In those instances where a regulation published in the Federal Register states a date certain for expiration, an appropriate note will be inserted following the text.

OMB CONTROL NUMBERS

The Paperwork Reduction Act of 1980 (Pub. L. 96–511) requires Federal agencies to display an OMB control number with their information collection request.

Many agencies have begun publishing numerous OMB control numbers as amendments to existing regulations in the CFR. These OMB numbers are placed as close as possible to the applicable recordkeeping or reporting requirements.

OBSOLETE PROVISIONS

Provisions that become obsolete before the revision date stated on the cover of each volume are not carried. Code users may find the text of provisions in effect on a given date in the past by using the appropriate numerical list of sections affected. For the period before January 1, 2001, consult either the List of CFR Sections Affected, 1949–1963, 1964–1972, 1973–1985, or 1986–2000, published in 11 separate volumes. For the period beginning January 1, 2001, a ''List of CFR Sections Affected'' is published at the end of each CFR volume.

INCORPORATION BY REFERENCE

What is incorporation by reference? Incorporation by reference was established by statute and allows Federal agencies to meet the requirement to publish regulations in the Federal Register by referring to materials already published elsewhere. For an incorporation to be valid, the Director of the Federal Register must approve it. The legal effect of incorporation by reference is that the material is treated as if it were published in full in the Federal Register (5 U.S.C. 552(a)). This material, like any other properly issued regulation, has the force of law.

What is a proper incorporation by reference? The Director of the Federal Register will approve an incorporation by reference only when the requirements of 1 CFR part 51 are met. Some of the elements on which approval is based are:

(a) The incorporation will substantially reduce the volume of material published in the Federal Register.

(b) The matter incorporated is in fact available to the extent necessary to afford fairness and uniformity in the administrative process.

(c) The incorporating document is drafted and submitted for publication in accordance with 1 CFR part 51.

Properly approved incorporations by reference in this volume are listed in the Finding Aids at the end of this volume.

What if the material incorporated by reference cannot be found? If you have any problem locating or obtaining a copy of material listed in the Finding Aids of this volume as an approved incorporation by reference, please contact the agency that issued the regulation containing that incorporation. If, after contacting the agency, you find the material is not available, please notify the Director of the Federal Register, National Archives and Records Administration, Washington DC 20408, or call (202) 741–6010.

CFR INDEXES AND TABULAR GUIDES

A subject index to the Code of Federal Regulations is contained in a separate volume, revised annually as of January 1, entitled CFR INDEX AND FINDING AIDS. This volume contains the Parallel Table of Statutory Authorities and Agency Rules (Table I). A list of CFR titles, chapters, and parts and an alphabetical list of agencies publishing in the CFR are also included in this volume.

An index to the text of ''Title 3—The President'' is carried within that volume.

The Federal Register Index is issued monthly in cumulative form. This index is based on a consolidation of the ''Contents'' entries in the daily Federal Register.

A List of CFR Sections Affected (LSA) is published monthly, keyed to the revision dates of the 50 CFR titles.

REPUBLICATION OF MATERIAL

There are no restrictions on the republication of material appearing in the Code of Federal Regulations.

INQUIRIES

For a legal interpretation or explanation of any regulation in this volume, contact the issuing agency. The issuing agency's name appears at the top of odd–numbered pages.

For inquiries concerning CFR reference assistance, call 202–741–6000 or write to the Director, Office of the Federal Register, National Archives and Records Administration, Washington, DC 20408 or e-mail info@fedreg.nara.gov.

SALES

The Government Printing Office (GPO) processes all sales and distribution of the CFR. For payment by credit card, call toll free, 866–512–1800 or DC area, 202–512–1800, M–F, 8 a.m. to 4 p.m. e.s.t. or fax your order to 202–512–2250, 24 hours a day. For payment by check, write to the Superintendent of Documents, Attn: New Orders, P.O. Box 371954, Pittsburgh, PA 15250–7954. For GPO Customer Service call 202–512–1803.

ELECTRONIC SERVICES

The full text of the Code of Federal Regulations, The United States Government Manual, the Federal Register, Public Laws, Public Papers, Weekly Compilation of Presidential Documents and the Privacy Act Compilation are available in electronic format at www.access.gpo.gov/nara (''GPO Access''). For more information, contact Electronic Information Dissemination Services, U.S. Government Printing Office. Phone 202–512–1530, or 888–293–6498 (toll–free). E–mail, gpoaccess@gpo.gov.

The Office of the Federal Register also offers a free service on the National Archives and Records Administration's (NARA) World Wide Web site for public law numbers, Federal Register finding aids, and related information. Connect to NARA's web site at www.archives.gov/federal__register. The NARA site also contains links to GPO Access.

RAYMOND A. MOSLEY,
Director,
Office of the Federal Register.

July 1, 2003.

THIS TITLE

Title 40—PROTECTION OF ENVIRONMENT is composed of twenty–nine volumes. The parts in these volumes are arranged in the following order: parts 1–49, parts 50–51, part 52 (52.01–52.1018), part 52 (52.1019–End), parts 53–59, part 60 (60.1–End), part 60 (Appendices), parts 61–62, part 63 (63.1–63.599), part 63 (63.600–1–63.1199), part 63 (63.1200–63.1439), part 63 (63.1440–End) parts 64–71, parts 72–80, parts 81–85, part 86 (86.1–86.599–99) part 86 (86.600–1–End), parts 87–99, parts 100–135, parts 136–149, parts 150–189, parts 190–259, parts 260–265, parts 266–299, parts 300–399, parts 400–424, parts 425–699, parts 700–789, and part 790 to End. The contents of these volumes represent all current regulations codified under this title of the CFR as of July 1, 2003.

Chapter I—Environmental Protection Agency appears in all twenty–nine volumes. An alphabetical Listing of Pesticide Chemicals Index appears in parts 150–189. Regulations issued by the Council on Environmental Quality appear in the volume containing part 790 to End. The OMB control numbers for title 40 appear in §9.1 of this chapter.

Would you like to know. . .

if any changes have been made to the *Code of Federal Regulations* or what documents have been published in the *Federal Register* without reading the *Federal Register* every day? If so, you may wish to subscribe to the *LSA* (List of CFR Sections Affected), the *Federal Register Index,* or both.

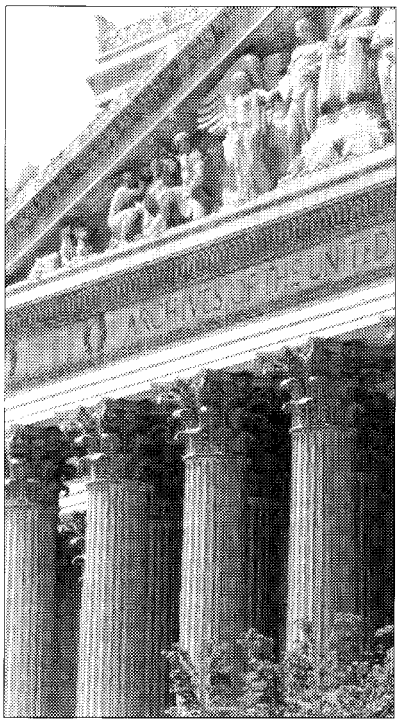

LSA

The *LSA* (List of CFR Sections Affected) is designed to lead users of the *Code of Federal Regulations* to amendatory actions published in the *Federal Register*. The *LSA* is issued monthly in cumulative form. Entries indicate the nature of the changes—such as revised, removed, or corrected.
$31 per year.

Federal Register Index

The index, covering the contents of the daily *Federal Register,* is issued monthly in cumulative form. Entries are carried primarily under the names of the issuing agencies. Significant subjects are carried as cross-references.
$28 per year.

A finding aid is included in each publication which lists *Federal Register* page numbers with the date of publication in the *Federal Register.*

Superintendent of Documents Subscription Order Form

Order Processing Code:
***5421**

❑ **YES,** send me the following indicated subscriptions for one year:

____ **LSA (List of CFR Sections Affected),** (LCS) for $31 per year.

____ **Federal Register Index** (FRSU) $28 per year.

The total cost of my order is $ _____. Price is subject to change. International customers please add 25%.

(Includes regular shipping and handling.)

For privacy check box below:

❑ Do not make my name available to other mailers

Check method of payment:

❑ Check payable to Superintendent of Documents

❑ GPO Deposit Account ☐☐☐☐☐☐☐ — ☐

❑ VISA ❑ MasterCard ☐☐☐☐ (expiration date)

Company or personal name

Street address

City, State, ZIP code

Daytime phone with area code

Purchase order No. (optional)

Credit card No. (must be 20 digits)

Thank you for your order!

Authorizing signature 7/00

Fax your orders (202) 512–2250
Phone your orders (202) 512–1800

Mail To: Superintendent of Documents
P.O. Box 371954
Pittsburgh, PA 15250–7954

Title 40—Protection of Environment

(This book contains part 790 to End)

	Part
CHAPTER I—Environmental Protection Agency (Continued)	790
CHAPTER IV—Environmental Protection Agency and Department of Justice	1400
CHAPTER V—Council on Environmental Quality	1500
CHAPTER VI—Chemical Safety and Hazard Investigation Board	1600
CHAPTER VII—Environmental Protection Agency and Department of Defense; Uniform National Discharge Standards for Vessels of the Armed Forces	1700

CHAPTER I—ENVIRONMENTAL PROTECTION AGENCY (CONTINUED)

EDITORIAL NOTE: Nomenclature changes to Chapter I appear at 65 FR 47324, 47325, Aug. 2, 2000, and 66 FR 34375, 34376, June 28, 2001.

SUBCHAPTER R—TOXIC SUBSTANCES CONTROL ACT (CONTINUED)

Part		*Page*
790	Procedures governing testing consent agreements and test rules	5
791	Data reimbursement	26
792	Good laboratory practice standards	33
795	Provisional test guidelines	46
796	Chemical fate testing guidelines	80
797	Environmental effects testing guidelines	101
798	Health effects testing guidelines	140
799	Identification of specific chemical substance and mixture testing requirements	223

SUBCHAPTER S–T [RESERVED]

SUBCHAPTER U—AIR POLLUTION CONTROLS

1048	Control of emissions from new, large nonroad spark–ignition engines	455
1051	Control of emissions from recreational engines and vehicles	508
1065	Test procedures and equipment	559
1068	General compliance provisions for nonroad programs	588

SUBCHAPTER R—TOXIC SUBSTANCES CONTROL ACT (CONTINUED)

PART 790—PROCEDURES GOVERNING TESTING CONSENT AGREEMENTS AND TEST RULES

Subpart A—General Provisions

Sec.
790.1 Scope, purpose, and authority.
790.2 Applicability.
790.3 Definitions.
790.5 Submission of information.
790.7 Confidentiality.

Subpart B—Procedures for Developing Consent Agreements and Test Rules

790.20 Recommendation and designation of testing candidates by the ITC.
790.22 Procedures for gathering information and negotiating consent agreements on chemicals which the ITC has recommended for testing with an intent to designate.
790.24 Criteria for determining whether a consensus exists concerning the provisions of a draft consent agreement.
790.26 Initiation and completion of rulemaking proceedings on ITC-designated chemicals.
790.28 Procedures for developing consent agreements and/or test rules for chemicals that have not been designated or recommended with intent to designate by the ITC.

Subpart C—Implementation, Enforcement, and Modification of Test Rules

790.40 Promulgation of test rules.
790.42 Persons subject to a test rule.
790.45 Submission of letter of intent to conduct testing or exemption application.
790.48 Procedure if no one submits a letter of intent to conduct testing.
790.50 Submission of study plans.
790.52 Phase II test rule.
790.55 Modification of test standards or schedules during conduct of test.
790.59 Failure to comply with a test rule.

Subpart D—Implementation, Enforcement and Modification of Consent Agreements

790.60 Contents of consent agreements.
790.62 Submission of study plans and conduct of testing.
790.65 Failure to comply with a consent agreement.
790.68 Modification of consent agreements.

Subpart E—Exemptions From Test Rules

790.80 Submission of exemption applications.
790.82 Content of exemption application.
790.85 Submission of equivalence data.
790.87 Approval of exemption applications.
790.88 Denial of exemption application.
790.90 Appeal of denial of exemption application.
790.93 Termination of conditional exemption.
790.97 Hearing procedures.
790.99 Statement of financial responsibility.
APPENDIX A TO SUBPART E—SCHEDULE FOR DEVELOPING CONSENT AGREEMENTS AND TEST RULES

AUTHORITY: 15 U.S.C. 2603.

Subpart A—General Provisions

§ 790.1 Scope, purpose, and authority.

(a) This part establishes procedures for gathering information, conducting negotiations, and developing and implementing test rules or consent agreements on chemical substances and mixtures under section 4 of TSCA.

(b) Section 4 of the Act authorizes EPA to require manufacturers and processors of chemical substances and mixtures to test these chemicals to determine whether they have adverse health or environmental effects. Section 4 (a) empowers the Agency to promulgate rules which require such testing. In addition, EPA has implied authority to enter into enforceable consent agreements requiring testing where they provide procedural safeguards equivalent to those that apply where testing is conducted by rule.

(c) EPA intends to use enforceable consent agreements to accomplish testing where a consensus exists among EPA, affected manufacturers and/or processors, and interested members of the public concerning the need for and scope of testing. If such a consensus does not exist and the Agency believes that it can make the findings specified in section 4(a), EPA will initiate proceedings to promulgate test rules which will be codified in part 799 of this chapter.

(d) Appendix A to this part presents timetables for various steps in the evaluation of chemicals under consideration for testing, the initiation and completion of negotiations to develop consent agreements, and the proposal and promulgation of test rules. All deadlines which are imposed by the Act are binding on EPA and will be observed by the Agency. The remaining deadlines represent target dates that EPA intends to meet.

[51 FR 23712, June 30, 1986]

§ 790.2 Applicability.

This part is applicable to manufacturers and processors of chemical substances or mixtures who are subject to the testing requirements of a consent agreement or a rule under section 4(a) of the Act. The procedures for test rules are applicable to each test rule in part 799 or this chapter unless otherwise stated in specific test rules in part 799 of this chapter.

[51 FR 23712, June 30, 1986]

§ 790.3 Definitions.

Terms defined in the Act and not explicitly defined herein are used with the meaning given in the Act. For the purpose of this part:

Act means the Toxic Substances Control Act, 15 U.S.C. 2601 *et seq.*

Additive means a chemical substance that is intentionally added to another chemical substance to improve its stability or impart some other desirable quality.

Chemical means a chemical substance or mixture.

Consortium means an association of manufacturers and/or processors who have made an agreement to jointly sponsor testing.

EPA means the U.S. Environmental Protection Agency.

Equivalence data means chemical data or biological test data intended to show that two substances or mixtures are equivalent.

Equivalent means that a chemical substance or mixture is able to represent or substitute for another in a test or series of tests, and that the data from one substance can be used to make scientific and regulatory decisions concerning the other substance.

Exemption means an exemption from a testing requirement of a test rule promulgated under section 4 of the Act and part 799 of this chapter.

Impurity means a chemical substance which is unintentionally present with another chemical substance.

Joint sponsor means a person who sponsors testing pursuant to section 4(b)(3)(A) of the Act.

Joint sponsorship means the sponsorship of testing by two or more persons in accordance with section

4(b)(3)(A) of the Act.

Person means an individual, partnership, corporation, association, scientific or academic establishment, or organizational unit thereof, and any other legal entity.

Principal sponsor means an individual sponsor or the joint sponsor who assumes primary responsibility for the direction of a study and for oral and written communication with EPA.

Protocol means the plan and procedures which are to be followed in conducting a test.

Reimbursement period refers to a period that begins when the data from the last non-duplicative test to be completed under a test rule are submitted to EPA and ends after an amount of time equal to that which had been required to develop data or after five years, whichever is later.

Sponsor means the person or persons who design, direct and finance the testing of a substance or mixture.

Test substance means the form of chemical substance or mixture that is specified for use in testing.

[49 FR 39782, Oct. 10, 1984, as amended at 51 FR 23712, June 30, 1986]

§ 790.5 Submission of information.

(a) All submissions to EPA under this part must bear the Code of Federal Regulations (CFR) section number of the subject chemical test rule, or indicate the identity of the consent agreement. For all submissions under this part, six copies must be provided to EPA.

(b) Submissions containing both confidential business information or nonconfidential business information must be addressed to the Document Control

Office (7407), Office of Pollution Prevention and Toxics, U.S. Environmental Protection Agency, Room G–099, 1200 Pennsylvania Ave., NW., Washington, DC 20460, ATTN: TSCA Section 4.

[50 FR 20656, May 17, 1985, as amended at 51 FR 23712, June 30, 1986; 58 FR 34205, June 23, 1993; 60 FR 31922, June 19, 1995; 60 FR 34466, July 3, 1995]

§ 790.7 Confidentiality.

(a) Any person subject to the requirements of a consent agreement or a test rule under section 4 of the Act may assert a claim of confidentiality for certain information submitted to EPA in response to the consent agreement or the test rule. Any information claimed as confidential will be treated in accordance with the procedures in part 2 of this title and section 14 of the Act. Failure to assert a claim of confidentiality at the time the information is submitted will result in the information being made available to the public without further notice to the submitter.

(b) A claim of confidentiality must be asserted by circling or otherwise marking the specific information claimed as confidential and designating it with the words ''confidential business information,'' ''trade secret,'' or another appropriate phrase indicating its confidential character.

(c) If a person asserts a claim of confidentiality for study plan information described in §§ 790.50(c)(1)(iii)(D), (iv), (v), and (vi) and 790.62(b)(6), (7), (8), (9), and (10), the person must provide a detailed written substantiation of the claim by answering the questions in this paragraph. Failure to provide written substantiation at the time the study plan information is submitted will be considered a waiver of the claim of confidentiality, and the study plan information will be disclosed to the public without further notice.

(1) Would disclosure of the study plan information disclose processes used in the manufacture or processing of a chemical substance or mixture? Describe how this would occur.

(2) Would disclosure of the study plan information disclose the portion of a mixture comprised by any of the substances in the mixture? Describe how this would occur.

(3) What harmful effects to your competitive position, if any, do you think would result from disclosure of this information? How would a competitor use such information? How substantial would the harmful effects be? What is the causal relationship between disclosure and the harmful effects?

(4) For what period of time should confidential treatment be given? Until a specific date, the occurrence of a specific event, or permanently? Why?

(5) What measures have you taken to guard against disclosure of this information to others?

(6) To what extent has this information been disclosed to others? What precautions have been taken in connection with such disclosures?

(7) Has this information been disclosed to the public in any forms? Describe the circumstances.

(8) Has the information been disclosed in a patent?

(9) Has EPA, another Federal agency, or any Federal court made any pertinent confidentiality determination regarding this information? If so, copies of such determinations must be included in the substantiation.

(d) If the substantiation provided under paragraph (c) of this section contains information which the submitter considers confidential, the submitter must assert a separate claim of confidentiality for that information at the time of submission in accordance with paragraph (b) of this section.

[49 FR 39782, Oct. 10, 1984, as amended at 51 FR 23713, June 30, 1986]

Subpart B—Procedures for Developing Consent Agreements and Test Rules

SOURCE: 51 FR 23713, June 30, 1986, unless otherwise noted.

§ 790.20 Recommendation and designation of testing candidates by the ITC.

(a) *Recommendations with intent to designate.* The ITC has advised EPA that it will discharge its responsibilities under section 4(e) of the Act in the following manner:

(1) When the ITC identifies a chemical substance or mixture that it believes should receive expedited consideration by EPA for testing, the ITC may add the substance or mixture to its list of chemicals recommended for testing and include a statement that the ITC intends to designate the substance or mixture for action by EPA in accordance with section 4(e)(1)(B) of the Act.

(2) Chemical substances or mixtures selected for expedited review under paragraph (a)(1) of this section may, at a later time, be designated for EPA action within 12 months of such designation. The ITC's subsequent decision would be based on the ITC's review of TSCA sections 8(a) and 8(d) data and other relevant information.

(3) Where the ITC concludes that a substance or mixture warrants testing consideration but that expedited EPA review of testing needs is not justified, the ITC will add the substance or mixture to its list of testing recommendations without expressing an intent to designate the substance or mixture for EPA action in accordance with section 4(e)(1)(B) of the Act.

(4) The ITC reserves its right to designate any chemical that it determines the Agency should, within 12 months of the date first designated, initiate a proceeding under section 4(a) of the Act.

(b) *EPA consideration of ITC recommendations.* (1) Where a substance or mixture is designated for EPA action under section 4(e)(1)(B) of the Act, the Agency will take either one of the following actions within 12 months after receiving the ITC designation:

(i) Initiate rulemaking proceedings under section 4(a) of the Act.

(ii) Publish a FEDERAL REGISTER notice explaining the Agency's reasons for not initiating such rulemaking proceedings. EPA may conclude that rulemaking proceedings under section 4(a) of the Act are unnecessary if it determines that the findings specified in section 4(a) of the Act cannot be made or if the Agency has entered into a consent agreement requiring testing in accordance with the provisions of this subpart.

(2) Where a substance or mixture has been recommended for testing by the ITC without an intent to designate, EPA will use its best efforts to act on the ITC's recommendations as rapidly as possible consistent with its other priorities and responsiblities. EPA may respond to the ITC's recommendations either by:

(i) Initiating rulemaking proceedings under section 4(a) of the Act.

(ii) Publishing a FEDERAL REGISTER notice explaining the Agency's reasons for concluding that testing is unnecessary.

(iii) Entering into a consent agreement in accordance with this subpart.

§ 790.22 Procedures for gathering information and negotiating consent agreements on chemicals which the ITC has recommended for testing with an intent to designate.

(a) *Preliminary EPA evaluation.* Following receipt of an ITC report containing a recommendation with an intent to designate, EPA will use the following procedure for completing a preliminary evaluation of testing needs. Appendix A[1] to this part presents the schedule that EPA intends to follow for this purpose.

(1) EPA will publish the ITC report in the FEDERAL REGISTER and announce that interested persons have 30 days to submit comments on the ITC's testing recommendations.

(2) EPA will publish a FEDERAL REGISTER notice adding all ITC-recommended chemicals to the automatic reporting provisions of its rules under sections 8(a) and 8(d) of the Act (40 CFR parts 712 and 716).

(3) EPA will hold a public ''focus meeting'' to discuss the ITC's testing recommendations and obtain comments and information from interested parties.

(4) EPA will evaluate submissions received under the sections 8(a) and 8(d) reporting requirements, comments filed on the ITC's recommendations, and other information and data compiled by the Agency.

(5) EPA will make a preliminary staff determination of the need for testing and, where testing appears warranted, will tentatively select the studies to be performed.

[1] Editorial Note: Appendix A appears at the end of subpart E.

(6) EPA will hold a public meeting to announce its preliminary testing determinations.

(b) *Negotiation procedures for consent agreements.* Where EPA believes that testing is necessary, the Agency will explore whether a consent agreement can be negotiated that satisfies the testing needs identified by the Agency. EPA will use the following procedures for negotiating, formulating and accepting consent agreements. Appendix A[1] to this part presents the schedule that EPA intends to follow for this purpose.

(1) In the FEDERAL REGISTER notice described in paragraph (a)(1) of this section, EPA will explain its procedures and timetable for negotiating consent agreements and invite persons interested in participating in or monitoring negotiations to contact the Agency in writing.

(2) Persons who respond to EPA's notice by the announced date of the Agency's course-setting meeting will be deemed ''interested parties'' for purposes of any negotiations that EPA conducts.

(3) Following the course-setting meeting announcing EPA's preliminary testing determinations, the Agency will meet with manufacturers, processors and other interested parties for the purpose of attempting to negotiate a consent agreement. To facilitate attendance at these meetings, EPA will contact all interested parties who have expressed a desire to participate in or monitor negotiations under paragraph (b)(2) of this section and advise them of meeting dates.

(4) All negotiating meetings will be open to members of the public. The minutes of each meeting will be prepared by EPA. Meeting minutes, testing proposals, background documents and other materials exchanged at or prepared for negotiating meetings will be included in the public file established by EPA on each ITC-recommended chemical. Materials in this file will be made available for inspection in the OPPTS Reading Room during EPA working hours.

(5) While negotiations are underway, EPA will promptly circulate meeting minutes, testing proposals, correspondence and other relevant materials to interested parties who expressed a desire to participate in or monitor negotiations pursuant to paragraph (b)(2) of this section.

(6) As negotiations progress, EPA will make a tentative decision either to proceed with formulation of a consent agreement or to initiate rulemaking. EPA will terminate negotiations after 10 weeks and proceed with rulemaking unless negotiations are likely to result in a draft consent agreement within 4 additional weeks. By the end of this 4-week period, EPA either will have prepared a draft consent agreement reflecting the apparent consensus of the parties or will terminate negotiations and proceed with rulemaking. If EPA decides to proceed with rulemaking, no further opportunity for negotiations will be provided. EPA will promptly send written notice to all interested parties of the termination of negotiations.

(7) Where EPA prepares a draft consent agreement, it will be circulated for comment to all interested parties who expressed a desire to participate in or monitor negotiations under paragraph (b)(2) of this section. A period of 4 weeks will be provided for submitting comments or written objections under § 790.24(a).

(8) If necessary, EPA will hold a public meeting to discuss comments on the draft consent agreement and to determine whether revisions in the agreement are appropriate.

(9) Where a consensus exists concerning the contents of a draft consent agreement, it will be circulated to EPA management and interested parties for final approval and signature.

(10) Upon final approval of a consent agreement, EPA will publish a FEDERAL REGISTER notice that summarizes the agreement, describes the ITC recommendations for the test substance, outlines the chemical's use and exposure characteristics, and explains the background, objectives and rationale of the testing to be conducted, and codifies in subpart C of part 799 the name of the substance(s) to be tested and the citation to the FEDERAL REGISTER notice of the agreement.

§ 790.24 Criteria for determining whether a consensus exists concerning the provisions of a draft consent agreement.

(a) EPA will enter into consent agreements only where there is a consensus among the Agency, one or more manufacturers and/or processors who agree to conduct or sponsor the testing, and all other interested parties who identify themselves in accordance with § 790.22(b)(2). EPA will not enter into a consent agreement in either of the following circumstances:

(1) EPA and affected manufacturers and/or processors cannot reach a consensus on the testing requirements or other provisions to be included in the consent agreement.

(2) A draft consent agreement is considered inadequate by other interested parties who, pursuant to § 790.22(b)(2), have asked to participate in or monitor negotiations; and these parties have submitted timely written objections to the draft consent agreement which provide a specific explanation of the grounds on which the draft agreement is objectionable.

(b) EPA may reject objections described in paragraph (a)(2) of this section only where the Agency concludes the objections are either:

(1) Not made in good faith.

(2) Untimely.

(3) Do not involve the adequacy of the proposed testing program or other features of the agreement that may affect EPA's ability to fulfill the goals and purposes of the Act.

(4) Not accompanied by a specific explanation of the grounds on which the draft agreement is considered objectionable.

(c) The unwillingness of some manufacturers and/or processors of a prospective test chemical to sign the draft consent agreement does not, in itself, establish a lack of consensus if EPA concludes that those manufacturers and/or processors who are prepared to sign the agreement are capable of accomplishing the testing to be required and that the draft agreement will achieve the purposes of the Act in all other respects.

§ 790.26 Initiation and completion of rulemaking proceedings on ITC-designated chemicals.

(a) Where EPA concludes that a consensus does not exist concerning the provisions of a draft consent agreement and that the findings specified by section 4(a) can be made, the Agency will proceed with rulemaking under section 4(a) of TSCA.

(b) When EPA decides to proceed with rulemaking under paragraph (a) of this section, the Agency intends to publish a rulemaking proposal and a final rule or a notice terminating the rulemaking proceeding in accordance with the schedule specified in Appendix A[1] to this part.

(c) Where the testing recommendations of the ITC raise unusually complex and novel issues that require additional Agency review and opportunity for public comment, the Agency may publish an Advance Notice of Proposed Rulemaking (ANPR). The schedule that EPA intends to follow for rulemaking proceedings initiated by publication of an ANPR is presented in appendix A[1] to this part.

§ 790.28 Procedures for developing consent agreements and/or test rules for chemicals that have not been designated or recommended with intent to designate by the ITC.

(a) Where EPA believes that testing is needed, it may also develop consent agreements and/or test rules on chemical substances or mixtures that either:

(1) Have been recommended but not ''recommended with intent to designate'' by the ITC.

(2) Have been selected for testing consideration by EPA on its own initiative.

(b) When EPA wishes to initiate negotiations concerning chemicals described in paragraph (a) of this section, it will publish a FEDERAL REGISTER notice describing its tentative evaluation of testing needs, announcing a date for a public course-setting meeting, and inviting persons interested in participating in or monitoring negotiations to

[1] Editorial Note: Appendix A appears at the end of subpart E.

contact the Agency in writing. Any negotiations that EPA conducts will conform to the procedures specified in § 790.22(b) and, to the extent feasible, will follow the schedules presented in appendix A[1] to this part.

(c) EPA will enter into consent agreements on chemicals described in paragraph (a) of this section only if there is a consensus among EPA, affected manufacturers and/or processors, and any other persons who have asked to participate in or monitor negotiations. In determining whether such a consensus exists, EPA will employ the criteria specified in § 790.24. In the absence of consensus, EPA will initiate rulemaking if it concludes that the findings specified in section 4(a) of the Act can be made. The schedule for initiating and completing such rulemaking proceedings will, to the extent feasible, follow the schedule specified in appendix A[1] to this part.

Subpart C—Implementation, Enforcement, and Modification of Test Rules

SOURCE: 50 FR 20657, May 17, 1985, unless otherwise noted. Redesignated at 51 FR 23713, June 30, 1986.

§ 790.40 Promulgation of test rules.

(a) If EPA determines that it is necessary to test a chemical substance or mixture by rule under section 4 of the Act, it will promulgate a test rule in part 799 of this chapter.

(b) EPA will promulgate specific test rules in part 799 of this chapter either by a single-phase rulemaking procedure or by a two-phase rulemaking procedure.

(1) Under single-phase test rule development, EPA will promulgate a test rule in part 799 of this chapter through a notice and comment rulemaking which specifies the following:

(i) Identification of the chemical for which testing is required under the rule.

(ii) The health or environmental effect or effects or other characteristics for which testing is being required.

(iii) Which test substance(s) must be tested.

(iv) Standards for the development of test data.

(v) The EPA Good Laboratory Practice requirements for the required testing.

(vi) Schedule for submission of interim reports and/or final reports to EPA.

(vii) Who must submit either letters of intent to conduct testing or exemption applications.

(viii) What types of data EPA will examine in determining equivalence if more than one test substance is to be tested.

(2) Under two-phase test rule development, EPA will promulgate a Phase I test rule in part 799 of this chapter through a notice and comment rulemaking which specifies the following:

(i) Identification of the chemical for which testing is required under the rule.

(ii) The health or environmental effect or effects or other characteristics for which testing is being required.

(iii) Which test substance(s) must be tested.

(iv) A reference to appropriate guidelines for the development of test data.

(v) The EPA Good Laboratory Practice requirements for the required testing.

(vi) Who must submit either letters of intent to conduct testing and study plans, or exemption applications.

(vii) What types of data EPA will examine in determining equivalence if more than one test substance is to be tested.

(3) Under two-phase test rule development, test standards and schedules will be developed in a second phase of rulemaking as described in §§ 790.50 and 790.52.

[50 FR 20657, May 17, 1985. Redesignated and amended at 51 FR 23713, June 30, 1986; 54 FR 36313, Sept. 1, 1989]

§ 790.42 Persons subject to a test rule.

(a) Each test rule described in § 790.40 will specify whether manufacturers, processors, or both are subject to the requirement for testing of the subject chemical under section 4(b)(3)(B) of the

[1] Editorial Note: Appendix A appears at the end of subpart E.

Act and will indicate who will be required to submit letters of intent to conduct testing.

(1) If testing is being required to allow evaluation of risks:

(i) Primarily associated with manufacture of the chemical, or

(ii) Associated with both manufacturer and processing of the chemical, or

(iii) Associated with distribution in commerce, use, and/or disposal activities concerning the chemical, each manufacturer of the chemical will be subject and must comply with the requirements of the test rule.

(2) While legally subject to the test rule in circumstances described in paragraphs (a)(1) (ii) and (iii) of this section, processors of the chemical must comply with the requirements of the test rule only if processors are directed to do so in a subsequent notice as set forth in § 790.48(b).

(3) If testing is being required to allow evaluation of risks associated solely with processing of the chemical, processors will be subject and must comply with the requirements of the test rule.

(4) While legally subject to the test rule in circumstances described in paragraph (a)(1) of this section, persons who manufacture less than 500 kg (1,100 lb) of the chemical annually during the period from the effective date of the test rule to the end of the reimbursement period, must comply with the requirements of the test rule only if such manufacturers are directed to do so in a subsequent notice as set forth in § 790.48, or if directed to do so in a particular test rule.

(5) While legally subject to the test rule in circumstances described in paragraph (a)(1) of this section, persons who manufacture small quantities of the chemical solely for research and development (meaning quantities that are not greater than those necessary for purposes of scientific experimentation or analysis or chemical research on, or analysis of, such chemical or another chemical, including such research or analysis for development of a product) from the effective date of the test rule to the end of the reimbursement period, must comply with the requirements of the test rule only if such manufacturers are directed to do so in subsequent notice set forth in § 790.48, or if directed to do so in a particular test rule.

(6) If testing is being required to allow evaluation of risks associated primarily with manufacture of a chemical for research and development (R & D) purposes, manufacturers of the chemical for R & D will be subject and must comply with the requirements of the test rule.

(b) [Reserved]

[50 FR 20657, May 17, 1985. Redesignated at 51 FR 23713, June 30, 1986, and amended at 55 FR 18884, May 7, 1990]

§ 790.45 Submission of letter of intent to conduct testing or exemption application.

(a) No later than 30 days after the effective date of a test rule described in § 790.40, each person subject to that rule and required to comply with the requirements of that rule as provided in § 790.42(a) must, for each test required, either notify EPA by letter of his or her intent to conduct testing or submit to EPA an application for an exemption from testing requirements for the test.

(b) EPA will consider letters of intent to test as commitments to sponsor the tests for which they are submitted unless EPA agrees to the substitution of an exemption application in instances where more than one person indicates an intent to sponsor equivalent tests.

(c) Each letter of intent to conduct testing must include:

(1) Identification of test rule.

(2) Name, address, and telephone number of the firm(s) which will be sponsoring the tests.

(3) Name, address, and telephone number of the appropriate individual to contact for further information.

(4) For sponsors participating in a testing consortium—a list of all members of the consortium, the signature of an authorized representative of each member, and a designation of who is to serve as principal sponsor.

(5) A list of the testing requirements for which the sponsor(s) intends to conduct tests.

(6) If EPA is requiring testing of more than one representative

substance—which test substance the sponsor(s) intends to use in each of the tests.

(d)(1) Any person not manufacturing or processing the subject chemical as of the effective date of the test rule describing in § 790.40 or by 30 days after the effective date of the rule who, before the end of the reimbursement period, manufacturers or processes the test chemical and who is subject to and required to comply with the requirements of the test rule must submit the letter of intent to test or an exemption application required by paragraph (a) of this section by the date manufacture or processing begins, or

(2) When both manufacturers and processors are subject to the rule, any person not processing the subject chemical as of the effective date of the test rule described in § 790.40 or by 30 days after publication of the FEDERAL REGISTER notice described in § 790.48(b)(2) who, before the end of the reimbursement period, processes the test chemical and who is required to comply with the requirements of the rule must submit the letter of intent to test or an exemption application required by § 790.48(b)(3) of the date processing begins.

(e) Manufacturers subject to a test rule described in § 790.40 who do not submit to EPA either a letter of their intent to conduct tests or a request for an exemption from testing for each test for which testing is required in the test rule will be considered in violation of that rule beginning on the 31st day after the effective date of the test rule described in § 790.40 or on the date manufacture begins as described in paragraph (d) of this section.

(f) Processors subject to a test rule described in § 790.40 and required to comply with the requirements of test rule pursuant to § 790.42(a)(2) or a FEDERAL REGISTER notice as described in § 790.48(b)(2) who do not submit to EPA either a letter of their intent to conduct tests or a request for an exemption for each test for which testing is required in the test rule will be considered in violation of that rule beginning on the 31st day after the effective date of the test rule described in § 790.40 or 31 days after publication of the FEDERAL REGISTER notice described in § 790.48(b)(2) or on the date processing begins as described in paragraph (d) of this section, as appropriate.

§ 790.48 Procedure if no one submits a letter of intent to conduct testing.

(a) *If only manufacturers are subject to the rule.* (1) This paragraph applies if testing is being required solely to allow evaluation of risks associated with manufacturing and the test rule described in § 790.40 states that manufacturers only are responsible for testing.

(2) If no manufacturer subject to the test rule has notified EPA of its intent to conduct one or more of the required tests within 30 days after the effective date of the test rule described in § 790.40, EPA will notify all manufacturers, including those described in § 790.42(a)(4) and (a)(5), by certified mail or by publishing a notice of this fact in the FEDERAL REGISTER specifying the tests for which no letter of intent has been submitted and will give such manufacturers an opportunity to take corrective action.

(3) If no manufacturer submits a letter of intent to conduct one or more of the required tests within 30 days after receipt of the certified letter or publication of the FEDERAL REGISTER notice described in paragraph (a)(2) of this section, all manufacturers subject to the rule will be in violation of the test rule from the 31st day after receipt of the certified letter or publication of the FEDERAL REGISTER notice described in this paragraph.

(b) *If manufacturers and processors are subject to the rule.* (1) This paragraph applies if testing is being required to allow evaluation of risks associated with manufacturing and processing or with distribution in commerce, use, or disposal of the chemical and the test rule described in § 790.40 states that manufacturers and processors are responsible for testing.

(2) If no manufacturer subject to the rule has notified EPA of its intent to conduct testing for one or more of the required tests within 30 days after the effective date of the test rule described in § 790.40, EPA will publish a notice in the FEDERAL REGISTER of this fact specifying the tests for which no letter of intent has been submitted.

(3) No later than 30 days after the date of publication of the FEDERAL REGISTER notice described in paragraph (b)(2) of this section, each person described in § 790.40(a)(4) and (5) and each person processing the subject chemical as of the effective date of the test rule described in § 790.40 or by 30 days after the date of publication of the FEDERAL REGISTER notice described in paragraph (b)(2) of this section must, for each test specified in the FEDERAL REGISTER notice, either notify EPA by letter of his or her intent to conduct testing or submit to EPA an application for an exemption from testing requirements for the test.

(4) If no manufacturer or processor of the test chemical has submitted a letter of intent to conduct one or more of the required tests within 30 days after the date of publication of the FEDERAL REGISTER notice described in paragraph (b)(2) of this section, EPA will notify all manufacturers and processors by certified letter or publish a FEDERAL REGISTER notice of this fact specifying the tests for which no letter of intent has been submitted. This letter or FEDERAL REGISTER notice will give the manufacturers and processors an opportunity to take corrective action.

(5) If no manufacturer or processor submits a letter of intent to conduct one or more of the required tests within 30 days after receipt of the certified letter or publication of the FEDERAL REGISTER notice described in paragraph (b)(4) of this section, all manufacturers and processors subject to the rule will be in violation of the test rule from the 31st day after receipt of the certified letter or publication of the FEDERAL REGISTER notice described in paragraph (b)(4) of this section.

(c) *Only processors are subject to the rule.* (1) This paragraph applies if testing is being required solely to allow evaluation of risks associated with processing and the test rule described in § 790.40 states that only processors are responsible for testing.

(2) If no processor subject to the rule has notified EPA of its intent to conduct one or more of the required tests within 30 days after the effective date of the test rule described in § 790.40, EPA will notify all the processors by certified mail or publish a notice in the FEDERAL REGISTER of this fact, specifying the tests for which no letter of intent has been submitted and give the processors an opportunity to take corrective action.

(3) If no processor submits a letter of intent to conduct one or more of the required tests within 30 days after receipt of the certified letter or publication of the FEDERAL REGISTER notice described in paragraph (c)(2) of this section, all processors subject to the rule will be in violation of the test rule from the 31st day after receipt of the certified letter or publication of the FEDERAL REGISTER notice described in this paragraph.

[50 FR 20657, May 17, 1985. Redesignated at 51 FR 23713, June 30, 1986, and amended at 55 FR 18884, May 7, 1990]

§ 790.50 Submission of study plans.

(a) *Who must submit study plans.* (1) Persons who notify EPA of their intent to conduct tests in compliance with the requirements of a single phase test rule as described in § 790.40(b)(1) must submit study plans for those tests prior to the initiation of each of these tests, unless directed by a particular test rule or consent agreement to submit study plans at a specific time.

(2) Persons who notify EPA of their intent to conduct tests in compliance with the requirements of a Phase I test rule as described in § 790.40(b)(2) must submit the proposed study plans for those tests on or before 90 days after the effective date of the Phase I rule; or, for processors complying with the notice described in § 790.48(b)(2), 90 days after the publication date of that notice; or 60 days after the date manufacture or processing begins as described in § 790.45(d), as appropriate, to the address in § 790.5(b).

(3) Study plans must be prepared according to the requirements of this subpart B and part 792 of this chapter. Only one set of study plans should be prepared and submitted by persons who are jointly sponsoring testing.

(4) Any person subject to a test rule may submit a study plan for any test required by the rule at any time, regardless of whether the person previously submitted an application for exemption from testing for that test.

(5) Unless EPA has granted an extension of time for submission of proposed study plans, manufacturers who notify EPA that they intend to conduct testing in compliance with the requirements of a Phase I test rule as described in § 790.40(b)(2) and who do not submit proposed study plans for those tests on or before 90 days after the effective date of the Phase I test rule or 60 days after the date manufacture begins as described in § 790.45(d) will be considered in violation of the test rule as if no letter of intent to test had been submitted.

(6) Unless EPA has granted an extension of time for submission of proposed study plans, processors who notify EPA that they intend to conduct testing in compliance with the requirements of a Phase I test rule as described in § 790.40(b)(2) and who do not submit proposed study plans for those tests on or before 90 days after the effective date of the Phase I test rule or 90 days after the publication date of the notice described in § 790.48(b)(2), or 60 days after the date processing begins as described in § 790.45(d), as appropriate, will be considered in violation of the test rule as if no letter of intent to test had been submitted.

(b) *Extensions of time for submission of study plans.* (1) EPA may grant requests for additional time for the development of study plans on a case-by-case basis. Requests for additional time for study plan development must be made in writing to EPA at the address in § 790.5(b). Each extension request must state why EPA should grant the extension.

(2) Under two-phase rulemaking, extension requests must be submitted to EPA within 60 days after the effective date of the Phase I test rule as described in § 790.40(b)(2); or for processors complying with the notice described in § 790.48(b)(2), 60 days after the publication date of that notice; or 30 days after the date manufacture or processing begins as described in § 790.45(d), as appropriate.

(3) EPA will notify the submitter by certified mail of EPA's decision to grant or deny an extension request.

(4) Persons who have been granted an extension of time for submission of study plans as described in paragraph (b)(1) of this section and who do not submit proposed study plans in compliance with the requirements of a Phase I test rule in accordance with the new deadline granted by EPA will be considered in violation of the test rule as if no letter of intent to test had been submitted as described in § 790.45(e) and (f).

(c) *Content of study plans.* (1) All study plans are required to contain the following information:

(i) Identity of the test rule.

(ii) The specific test requirements of that rule to be covered by the study plan.

(iii)(A) The names and addresses of the test sponsors.

(B) The names, addresses, and telephone numbers of the responsible administrative officials and project manager(s) in the principal sponsor's organization.

(C) The name, address, and telephone number of the appropriate individual to contact for oral and written communications with EPA.

(D)(*1*) The names and addresses of the testing facilities and the names, addresses, and telephone numbers of the testing facilities' administrative officials and project manager(s) responsible for the testing.

(*2*) Brief summaries of the training and experience of each professional involved in the study, including study director, veterinarian(s), toxicologist(s), pathologist(s), chemist(s), microbiologist(s), and laboratory assistants.

(iv) Identity and data on the chemical substance(s) being tested, including physical constants, spectral data, chemical analysis, and stability under test and storage conditions, as appropriate.

(v) Study protocol, including the rationale for any combination of test protocols; the rationale for species/strain selection; dose selection (and supporting data); route(s) or method(s) of exposure; description of diet to be used and its source; including nutrients and contaminants and their concentrations; for *in vitro* test systems, a description of culture medium and its source; and a summary of expected spontaneous chronic diseases (including tumors), genealogy, and life span.

(vi) Schedule for initiation and completion of each short-term test and of each major phase of long-term tests; dates for submission of interim progress and final reports to EPA that are within the reporting deadlines specified by EPA In the final test rule.

(2) Information required in paragraph (c)(1)(iii)(D) of this section is not required in proposed study plans submitted in compliance with the requirements of a Phase I test rule if the information is not available at the time of study plan submission; however, the information must be submitted before the initiation of testing.

(d) *Incomplete study plans.* (1) Upon receipt of a study plan, EPA will review the study plan to determine whether it complies with paragraph (c) of this section. If EPA determines that the study plan does not comply with paragraph (c) of this section, EPA will notify the submitter that the submission is incomplete and will identify the deficiencies and the steps necessary to complete the submission.

(2) The submitter will have 15 days after the day it receives this notice to submit appropriate information to make the study plan complete.

(3) If the submitter fails to provide appropriate information to complete a proposed study plan submitted in compliance with the requirements of a Phase I test rule on or before 15 days after receipt of the notice, the submitter will be considered in violation of the test rule as if no letter of intent to conduct the test had been submitted as described in § 790.45(e) and (f).

(e) *Amendments to study plans.* Test sponsors shall submit all amendments to study plans to the Director, Office of Compliance Monitoring at the address in § 790.5(d).

[50 FR 20657, May 17, 1985. Redesignated and amended at 51 FR 23713, June 30, 1986; 52 FR 36569, Sept. 30, 1987; 54 FR 36313, Sept. 1, 1989; 55 FR 18884, May 7, 1990; 58 FR 34205, June 23, 1993; 60 FR 34466, July 3, 1995]

§ 790.52 Phase II test rule.

(a) If EPA determines that the proposed study plan described in § 790.50(a)(2) complies with § 790.50(c), EPA will publish a proposed Phase II test rule in the FEDERAL REGISTER requesting comments on the ability of the proposed study plan to ensure that data from the test will be reliable and adequate.

(b) EPA will provide a 45-day comment period and will provide an opportunity for an oral presentation upon the request of any person. EPA may extend the comment period if it appears from the nature of the issues raised by EPA's review or from public comments that further comment is warranted.

(c) After receiving and considering public comments on the study plan, EPA will adopt, as proposed or as modified in response to EPA review and public comments, the study protocol section of the study plan, as defined by § 790.50(c)(1)(v) of this chapter, as the test standard for the required testing, and the schedule section of the study plan, as defined by § 790.50(c)(1)(vi) of this chapter, as the schedule for the required testing in a final Phase II test rule.

[50 FR 20657, May 17, 1985. Redesignated at 51 FR 23713, June 30, 1986, and amended at 52 FR 36569, Sept. 30, 1987]

§ 790.55 Modification of test standards or schedules during conduct of test.

(a) *Application.* Any test sponsor who wishes to modify the test schedule for the mandatory testing conditions or requirements (i.e., ''shall statements'') in the test standard for any test required by a test rule must submit an application in accordance with this paragraph. Application for modification must be made in writing to EPA at the address in § 790.5(b), or by phone with written confirmation to follow within 10 working days. Applications must include an appropriate explanation and rationale for the modification. Where a test sponsor requests EPA to provide guidance or to clarify a non-mandatory testing requirement (i.e., ''should statements'') in a test standard, the test sponsor should submit these requests to EPA at the address in § 790.5(b).

(b) *Adoption.* (1) Where EPA concludes that the requested modification of a test standard or schedule for a test required under a test rule is appropriate, EPA will proceed in accordance with this paragraph (b).

(2) Where, in EPA's judgment, the requested modification of the test standard or schedule would not alter the scope of the test or significantly change the schedule for completing the test, EPA will not ask for public comment before approving the modification. EPA will notify the test sponsor by letter of EPA's approval. EPA will place copies of each application and EPA approval letter in the rulemaking record for the test rule in question. EPA will publish a notice annually in the FEDERAL REGISTER indicating the test standards or schedules for tests required in test rules which have been modified under this paragraph (b)(2) and describing the nature of the modifications. Until the FEDERAL REGISTER notice is published, any modification approved by EPA under this paragraph (b)(2) shall apply only to the test sponsor who applied for the modification under this paragraph (a) of this section.

(3) Where, in EPA's judgment, the requested modification of a test standard or schedule would significantly alter the scope of the test or significantly change the schedule for completing the test, EPA will publish a notice in the FEDERAL REGISTER requesting comment on the proposed modification. However, EPA will approve a requested modification of a test standard under paragraph (b)(3) of this section without first seeking public comment if EPA believes that an immediate modification to the test standard is necessary to preserve the accuracy or validity of an ongoing test. EPA may also modify a testing requirement or test condition in a test standard if EPA determines that the completion or achievement of this requirement or condition is not technically feasible. EPA may approve a test schedule extension under paragraph (b)(3) of this section without first seeking public comment if EPA determines, on a case-by-case basis, that a delay of over 12 months is not the fault of the test sponsor and is the result of unforeseen circumstances such as a lack of laboratory availability, lack of availability of suitable test substance (e.g., 14–C labelled test substance), lack of availability of healthy test organisms, or the unexpected failure of a long-term test. EPA will publish an annual notice in the FEDERAL REGISTER announcing the approval of any test standard modifications and test schedule extensions under paragraph (b)(3) of this section and provide a brief rationale of why the modification was granted.

(4) For purposes of this paragraph (b), a requested modification of a test standard or schedule for a test required under a test rule would alter the scope of the test or significantly change the schedule for completing the test if the modification would:

(i) Change the test species.

(ii) Change the route of administration of the test chemical.

(iii) Change the period of time during which the test species is exposed to the test chemical.

(iv) Except as provided in paragraph (b)(3) of this section, extend the final reporting deadline more than 12 months from the date specified in the final rule.

(c) *Disapproval.* Where EPA concludes that the requested modification of a test standard or schedule for a test required under a test rule is not appropriate, EPA will so notify the test sponsor in writing.

(d) *Timing.* (1) Test sponsors should submit all applications for test schedule modifications at least 60 days before the reporting deadline for the test in question.

(2) EPA will not normally approve any test schedule extensions submitted less than 30 days before the reporting deadline for the test in question.

(3) Except as provided in paragraph (b)(3) of this section, EPA may grant extensions for up to 1 year but will normally limit extensions to a period of time equal to the in-life portion of the test plus 60 days.

(4) EPA will normally approve only one deadline extension for each test.

(5) Test sponsors should submit requests for test standard modifications as soon as they determine that the test cannot be successfully completed according to the test standard specified in the rule.

[50 FR 20657, May 17, 1985. Redesignated at 51 FR 23713, June 30, 1986, and amended at 52 FR 36571, Sept. 30, 1987; 54 FR 36314, Sept. 1, 1989; 60 FR 34466, July 3, 1995]

§ 790.59 Failure to comply with a test rule.

(a) Persons who notified EPA of their intent to conduct a test required in a test rule in part 799 of this chapter and who fail to conduct the test in accordance with the test standards and schedules adopted in the test rule, or as modified in accordance with § 790.55, will be in violation of the rule.

(b) Any person who fails or refuses to comply with any aspect of this part or a test rule under part 799 of this chapter is in violation of section 15 of the Act. EPA will treat violations of the Good Laboratory Practice standards as indicated in § 792.17 of this chapter.

Subpart D—Implementation, Enforcement and Modification of Consent Agreements

SOURCE: 51 FR 23715, June 30, 1986, unless otherwise noted.

§ 790.60 Contents of consent agreements.

(a) *Standard provisions.* All consent agreements will contain the following provisions:

(1) Identification of the chemical(s) to be tested.

(2) The health effects, environmental effects and/or other characteristics for which testing will be required.

(3) The names and addresses of each manufacturer and/or processor who will sign the agreement.

(4) The name and address of the manufacturer, processor or other entity who has agreed to act as the principal test sponsor.

(5) The technical or commercial grade, level of purity or other characteristics of the test substances(s) or mixture(s).

(6) Standards for the development of test data.

(7) A requirement that testing will be conducted in accordance with the EPA Good Laboratory Practice (GLP) regulations (40 CFR part 792).

(8) Schedules with reasonable deadlines for submitting interim progress and/or final reports to EPA.

(9) A requirement that the principal sponsor will submit a study plan to EPA in accordance with § 790.62.

(10) A statement that the results of testing conducted pursuant to the consent agreement will be announced to the public in accordance with the procedures specified in section 4(d) of the Act and that the disclosure of data generated by such testing will be governed by section 14(b) of the Act.

(11) A requirement that the manufacturers and/or processors signing the consent agreement will comply with the notification requirements of section 12(b)(1) of the Act and part 707 of this chapter if they export or intend to export the substance or mixture for which the submission of data is required under the agreement and a statement that any other person who exports or intends to export such substance or mixture is subject to the above cited export notification requirements.

(12) A requirement that, in the event EPA promulgates a significant new use rule applicable to the test chemical under section 5(a)(2), the consent agreement will have the status of a test rule for purposes of section 5(b)(1)(A) and manufacturers and/or processors signing the agreement will comply with the data submission requirements imposed by that provision.

(13) A statement that each manufacturer and/or processor signing the agreement agrees that violation of its requirements will constitute a ''prohibited act'' under section 15(1) of the Act and will trigger all provisions of TSCA applicable to a violation of section 15.

(14) A statement that, in the event one or more provisions of the agreement are determined to be unenforceable by a court, the remainder of the agreement would not be presumed to be valid and EPA will then either initiate a rulemaking proceeding or publish in the FEDERAL REGISTER the Administrator's reason for not initiating such a proceeding.

(15) A statement that the Agency may conduct laboratory inspections and/or study audits of the testing being conducted pursuant to the consent agreement in accordance with the authority and procedures contained in section 11 of the Act.

(16) A statement that EPA acceptance of a consent agreement constitutes ''final agency action'' for purposes of 5 U.S.C. 704.

(17) Any other requirements that the parties agree are necessary to achieve the purposes of the Act.

(b) *Contents of standards for the development of data.* The standards for the development of the data included in consent agreements will be based on the TSCA test guidelines in 40 CFR parts 796, 797, and 798, the Organization for Economic Cooperation and Development (OECD) test guidelines, the EPA pesticide assessment guidelines published by The National Technical Information Service (NTIS), or other suitable test methodologies. During the negotiation of consent agreements, EPA will initially propose suitable test guidelines as the required test standards; manufacturers and processors or other interested parties may then suggest alternative methodologies or modifications to the Agency's proposed guidelines. These alternative methodologies or modifications will be adopted only where, in the judgment of EPA, they will develop at least equally reliable and adequate data on the chemical substance or mixture subject to the agreement.

(c) *Statement of rationale for consent agreement.* EPA will prepare a written explanation of the basis for each consent agreement. This document will summarize the agreement, describe any ITC testing recommendations for the chemical involved, outline the chemical's use and exposure characteristics, and explain the objectives of the testing to be conducted and the rationale for the specific studies selected. This document will be published in the FEDERAL REGISTER and, for ITC-designated chemicals, will constitute the statement of EPA's reasons for not initiating rulemaking required by section 4(e)(1)(B) of the Act.

[51 FR 23715, June 30, 1986, as amended at 54 FR 36314, Sept. 1, 1989]

§ 790.62 Submission of study plans and conduct of testing.

(a) *Timing of submission.* The principal sponsor of testing conducted pursuant to a consent agreement shall submit a study plan no later than 45 days prior to the initiation of testing.

(b) *Content of study plans.* All study plans are required to contain the following information:

(1) Identity of the consent agreement under which testing will be performed.

(2) The specific test requirements to be covered by the study plan.

(3) The name and address of the principal test sponsor.

(4) The names, addresses, and telephone numbers of the responsible administrative official[s] and project manager[s] in the principal sponsor's organization.

(5) The names, addresses, and telephone numbers of the technical contacts at each manufacturer and/or processor subject to the agreement.

(6) The names and addresses of the testing facilities responsible for the testing and the names, addresses, and telephone numbers of the administrative officials[s] and project manager[s] assigned to oversee the testing program at these facilities.

(7) Brief summaries of the training and experience of each professional involved in the study, including study director, veterinarian[s], toxicologist[s], pathologist[s], chemist[s], microbiologist[s], and laboratory assistants.

(8) Identity and supporting data on the chemical substance[s] being tested, including physical constants, spectral data, chemical analysis, and stability under test and storage conditions, as appropriate.

(9) Study protocol, including the rationale for any combination of test protocols; the rationale for species/strain selection; dose selection (and supporting data); route(s) or method(s) of exposure; description of diet to be used and its source, including nutrients and contaminants and their concentrations; for *in vitro* test systems, a description of culture medium and its source; and a summary of expected spontaneous chronic diseases (including tumors), genealogy, and life span.

(10) A schedule, with reasonable timeables and deadlines, for initiation and completion of each short-term test and of each major phases of long-term tests, and submission of interim progress and/or final reports to EPA.

(c) *Review and modification.* (1) Upon receipt of a study plan, EPA will review it to determine whether it complies with paragraph (b) of this section. If EPA determines that the study plan does not comply with paragraph (b) of this section, EPA will notify the submitter that the plan is incomplete and will identify the deficiencies and the steps necessary to complete the plan. It is the responsibility of the test sponsor to review the study protocols to determine if they comply with all the mandatory testing conditions and requirements in the test standards (i.e., ''shall statements'').

(2) The submitter will have 15 days after the day it receives a notice under paragraph (c)(1) of this section to submit appropriate information to make the study plan complete.

(3) If the submitter fails to provide appropriate information to complete a study plan within 15 days after having received a notice under paragraph (c)(1) of this section, the submitter will be considered to be in violation of the consent agreement and subject to enforcement proceedings pursuant to § 790.65 (c) and (d).

(4) The test sponsor shall submit any amendments to study plans to EPA at the address specified in § 790.5(b).

(d) *Functions of the principal test sponsor.* When testing is being conducted pursuant to a consent agreement, the principal test sponsor will be responsible for submitting interim progress and final reports to EPA, informing the Agency of any proposed changes in standards for the development of data, study plans or testing schedules, and communicating with the Agency about laboratory inspections and other matters affecting the progress of testing.

[51 FR 23715, June 30, 1986, as amended at 54 FR 36314, Sept. 1, 1989; 60 FR 34466, July 3, 1995]

§ 790.65 Failure to comply with a consent agreement.

(a) Manufacturers and/or processors who have signed a consent agreement and who fail to comply with the test requirements, test standards, GLP regulations, schedules, or other provisions contained in the consent agreement, or in modifications to the agreement adopted pursuant to § 790.68, will be in violation of the consent agreement.

(b) The Agency considers failure to comply with any aspect of a consent agreement to be a ''prohibited act'' under section 15 of TSCA, subject to all of the provisions of the Act applicable to violations of section 15. Section 15(1) of TSCA makes it unlawful for any person to fail or refuse to comply with any rule or order issued under section 4. Consent agreements adopted pursuant to this part are ''orders issued under section 4'' for purposes of section 15(1) of TSCA.

(c) Manufacturers and/or processors who violate consent agreements are subject to criminal and/or civil liability. Under the penalty provisions of section 16 of TSCA, such firms could be subject to a civil penalty of up to $25,000 per violation with each day in violation constituting a separate violation of section 15. Intentional violations could lead to the imposition of criminal penalties of up to $25,000 for each day of violation and imprisonment for up to one year. In addition, EPA could invoke the remedies available under section 17 of TSCA, including seeking an injunction to compel adherence to the requirements of the consent agreement.

(d) Noncompliance with a consent agreement will constitute conduct ''in violation of this Act'' under section 20(a)(1) of TSCA. Thus, failure to comply with the requirements of a consent agreement could result in a citizens' civil action under section 20(a)(1) of TSCA.

§ 790.68 Modification of consent agreements.

(a) *Changes in the scope of testing.* (1) Manufacturers or processors subject to a consent agreement, other persons or EPA may seek modifications in the scope of testing performed under the consent agreement. If, upon receiving a request for modification, EPA determines that new issues have been raised that warrant reconsideration of the scope of testing, or if EPA determines on its own that such reconsideration is appropriate, EPA will publish a FEDERAL REGISTER notice describing the proposed modification and soliciting

public comment. If, based on the comments received, EPA concludes that differences of opinion may exist about the proposed modification, EPA will establish a schedule for conducting negotiations and invite parties who wish to participate in or monitor these negotiations to contact the Agency in writing. Any negotiations that EPA conducts will conform to the procedures specified in § 790.22(b).

(2) The scope of testing required by a consent agreement will be modified only where there is a consensus concerning the modified testing requirements among EPA, affected manufacturers and/or processors, and other persons who have asked to participate in or monitor negotiations under paragraph (a)(1) of this section. In determining whether a consensus exists, EPA will employ the criteria specified in § 790.24. In the absence of consensus, EPA may initiate rulemaking under section 4(a) of the Act if it concludes that any testing beyond that required by the consent agreement is necessary and that the other statutory findings required by section 4(a) can be made. While such rulemaking proceedings are underway, the consent agreement will remain in effect unless EPA finds that the testing required by the agreement is or may be unnecessary in view of the testing requirements included in EPA's proposed rule.

(b) *Changes in test standards or schedules.* (1) Any test sponsor who wishes to modify the test schedule for any test required under a consent order must submit an application in accordance with this paragraph. Application for modification must be made in writing to EPA at the address in § 790.5(b), or by phone with written confirmation to follow within 10 working days. Applications must include an appropriate explanation and rationale for the modification. EPA will consider only those applications that request modifications to mandatory testing conditions or requirements (''shall statements'' in the consent order). Where a test sponsor requests EPA to provide guidance or to clarify a non-mandatory testing requirement (i.e., ''should statements''), the test sponsor should submit these requests to EPA at the address in section 790.5(b).

(2)(i) Where EPA concludes that the requested modification of a test standard or schedule for a test required under a consent agreement is appropriate, EPA will proceed in accordance with this paragraph (b)(2).

(ii) Where, in EPA's judgment, the requested modification of a test standard or schedule would not alter the scope of the test or significantly change the schedule for completing the test, EPA will not ask for public comment before approving the modification. EPA will notify the test sponsor, and any other persons who have signed the consent agreement, by letter of EPA's approval. EPA will place copies of each application and EPA approval letter in the administrative record maintained for the consent agreement in question. EPA will publish a notice annually in the FEDERAL REGISTER indicating the test standards or schedules for test required in consent agreements which have been modified under this paragraph (b)(2)(ii) and describing the nature of the modifications.

(iii) Where, in EPA's judgment, the requested modification of a test standard or schedule would significantly alter the scope of the test or significantly change the schedule for completing the test, EPA will publish a notice in the FEDERAL REGISTER requesting comment on the proposed modification. However, EPA will approve a requested modification of a test standard under paragraph (b)(2)(iii) of this section without first seeking public comment if EPA believes that an immediate modification to the test standard is necessary to preserve the accuracy or validity of an ongoing test. EPA also may modify a testing requirement or test condition in a test standard if EPA determines that the completion or achievement of this requirement or condition is not technically feasible. EPA may approve a requested modification of a test schedule under paragraph (b)(2)(iii) of this section without first seeking public comment if EPA determines, on a case-by-case basis, that a delay of over 12 months is not the fault of the test sponsor and is due to unforeseen circumstances such as a lack of laboratory availability, lack of availability of suitable test substance (e.g., 14–C labelled test substance), lack

of availability of healthy test organisms, or the unexpected failure of a long-term test. EPA will publish an annual notice in the FEDERAL REGISTER announcing the approval of any test standard modifications and test scheduled extensions under paragraph (b)(2)(iii) of this section, and provide a brief rationale of why the modification was granted.

(iv) For purposes of this paragraph (b)(2), a requested modification of a test standard of schedule for a test required under a consent agreement would alter the scope of the test or significantly change the schedule for completing the test if the modification would:

(A) Change the test species.

(B) Change the route of administration of the test chemical.

(C) Change the period of time during which the test species is exposed to the test chemical.

(D) Except as provided in paragraph (b)(2)(iii) of this section, extend the final reporting deadline more than 12 months from the date specified in the consent order.

(3) Where EPA concludes that the requested modification of a test standard or schedule for a test requirement under a consent agreement is not appropriate, EPA will so notify the test sponsor in writing.

(c) *Timing.* (1) Test sponsors should submit all applications for test schedule modifications at least 60 days before the reporting deadline for the test in question.

(2) EPA will not normally approve any test schedule extensions submitted less than 30 days before the reporting deadline for the test in question.

(3) Except as provided in paragraph (b)(2)(iii) of this section, EPA may grant extensions as shown necessary for up to 1 year but will normally limit extensions to a period of time equal to the in-life portion of the test plus 60 days.

(4) EPA will normally approve only one deadline extension for each test.

(5) Test sponsors should submit requests for test standard modifications as soon as they determine that the test cannot be successfully completed according to the test standard specified in the consent order.

[51 FR 23715, June 30, 1986, as amended at 52 FR 36571, Sept. 30, 1987; 54 FR 36314, Sept. 1, 1989; 60 FR 34466, July 3, 1995]

Subpart E—Exemptions From Test Rules

SOURCE: 50 FR 20660, May 17, 1985, unless otherwise noted.

§ 790.80 Submission of exemption applications.

(a) *Who should file applications.* (1) Any manufacturer or processor subject to a test rule in part 799 of this chapter may submit an application to EPA for an exemption from performing any or all of the tests required under the test rule.

(2) Processors will not be required to apply for an exemption or conduct testing unless EPA so specifies in a test rule or in a special FEDERAL REGISTER notice as described in § 790.48(b)(2) under the following circumstances:

(i) If testing is being required to allow evaluation of risks associated with manufacturing and processing or with distribution in commerce, use, or disposal of the chemical and manufacturers do not submit notice(s) of intent to conduct the required testing; or

(ii) If testing is being required solely to allow evaluation of risks associated with processing of the chemical.

(b) *When applications must be filed.* (1) Exemption applications must be filed within 30 days after the effective date of the test rule described in § 790.40 or, if being submitted in compliance with the FEDERAL REGISTER notice described in § 790.48(b)(2), within 30 days after the publication of that notice.

(2) Exemption applications must be filed by the date manufacture or processing begins by any person not manufacturing or processing the subject chemical as of the effective date of the test rule described in § 790.40 or by 30 days after the effective date of the test rule described in § 790.40, who, before the end of the reimbursement period, manufactures or processes the test substance and who is subject to the requirement to submit either a letter of intent to test or an exemption application.

(3) When both manufacturers and processors are subject to the rule, exemption applications must be filed by the date processing begins by any person not processing as of the effective date of the test rule described in § 790.40 or by 30 days after publication of the FEDERAL REGISTER notice described in § 790.48(b)(2) who, before the end of the reimbursement period, processes the test substance and who is subject to the requirement to submit either a letter of intent to test or an exemption application.

(c) *Scope of application*. A person may apply for an exemption from all, or one or more, specific testing requirements in a test rule in part 799 of this chapter.

[50 FR 20660, May 17, 1985, as amended at 58 FR 34205, June 23, 1993]

§ 790.82 Content of exemption application.

The exemption application must contain:

(a) The identity of the test rule, the chemical identity, and the CAS No. of the test substance on which the application is based.

(b) The specific testing requirement(s) from which an exemption is sought and the basis for the exemption request.

(c) Name, address, and telephone number of applicant.

(d) Name, address, and telephone number of appropriate individual to contact for further information.

(e)(1) If required in the test rule to establish equivalence:

(i) The chemical identity of the test substance on which the application is based.

(ii) Equivalence data specified in § 790.85.

(2) If a test rule requires testing of a single representative substance, EPA will consider all forms of the chemical subject to that rule to be equivalent and will not require the submission of equivalence data as described in § 790.85.

[50 FR 20660, May 17, 1985, as amended at 54 FR 36315, Sept. 1, 1989]

§ 790.85 Submission of equivalence data.

If EPA requires in a test rule promulgated under section 4 of the Act the testing of two or more test substances which are forms of the same chemical, each exemption applicant must submit the following data:

(a) The chemical identity of each technical-grade chemical substance or mixture manufactured and/or processed by the applicant for which the exemption is sought. The exact type of identifying data required will be specified in the test rule, but may include all characteristics and properties of the applicant's substance or mixture, such as boiling point, melting point, chemical analysis (including identification and amount of impurities), additives, spectral data, and other physical or chemical information that may be relevant in determining whether the applicant's substance or mixture is equivalent to the specific test substance.

(b) The basis for the applicant's belief that the substance or mixture is equivalent to the test substance or mixture.

(c) Any other data which exemption applicants are directed to submit in the test rule which may bear on a determination of equivalence. This may include a description of the process by which each technical-grade chemical substance or mixture for which an exemption is sought is manufactured or processed prior to use or distribution in commerce by the applicant.

§ 790.87 Approval of exemption applications.

(a) EPA will conditionally approve exemption applications if:

(1)(i) For single-phase test rules, EPA has received a letter of intent to conduct the testing from which exemption is sought;

(ii) For two-phase test rules, EPA has received a complete proposed study plan for the testing from which exemption is sought and has adopted the study plan, as proposed or modified, as test standards and schedules in a final Phase II test rule; and

(2) The chemical substance or mixture with respect to which the application was submitted is equivalent to a test substance or mixture for which the

required data have been or are being submitted in accordance with a test rule; and

(3) Submission of the required test data concerning that chemical substance or mixture would be duplicative of data which have been or are being submitted to EPA in accordance with a test rule.

(b)(1) If a single representative substance is to be tested under a test rule, EPA will consider all forms of the chemical subject to that rule to be equivalent and will contact the exemption applicant only if information is missing or unclear.

(2) If two or more representative substances are to be tested under a test rule, EPA will evaluate equivalence claims made in each exemption application according to the criteria discussed in the test rule.

(i) If EPA finds an equivalence claim to be in error or inadequately supported, the applicant will be notified by certified mail. The applicant will be given 15 days to provide clarifying information.

(ii) Exemption applicants will be notified that equivalence has been accepted or rejected.

(c) The final Phase II test rule which adopts the study plans in two-phase rulemaking, a separate FEDERAL REGISTER notice in single-phase rulemaking, or a letter by certified mail will give exemption applicants final notice that they have received a conditional exemption. All conditional exemptions thus granted are contingent upon the test sponsors' successful completion of testing according to the specifications in the test rule.

§ 790.88 Denial of exemption application.

(a) EPA may deny any exemption application if:

(1) EPA determines that the applicant has failed to demonstrate that the applicant's chemical is equivalent to the test substance; or

(2) The exemption applicant fails to submit any of the information specified in § 790.82; or

(3) The exemption applicant fails to submit any of the information specified in § 790.85 if required in the test rule; or

(4)(i) For single-phase test rules, EPA has not received a letter of intent to conduct the test for which exemption is sought; or

(ii) For two-phase test rules, EPA has not received an adequate study plan for the test for which exemption is sought; or

(5) The study sponsor(s) fails to initiate the required testing by the deadlines adopted in the test rule; or

(6) The study sponsor(s) fails to submit data as required in the test standard and deadlines for submission of test data as adopted in the test rule or as modified in accordance with § 790.55.

(b) EPA will notify the exemption applicant by certified mail or FEDERAL REGISTER notice of EPA's determination that the exemption application is denied.

§ 790.90 Appeal of denial of exemption application.

(a) Within 30 days after receipt of notification that EPA has denied an application for exemption, the applicant may file an appeal with EPA.

(b) The appeal shall indicate the basis for the applicant's request for reconsideration.

(c)(1) The applicant may also include a request for a hearing. Hearings will be held according to the procedures described in § 790.97.

(2) Hearing requests must be in writing and must be received by EPA within 30 days of receipt of the letter or publication of the FEDERAL REGISTER notice described in § 790.88(b). Hearing requests must provide reasons why a hearing is necessary.

(d) If EPA determines that there are material issues of fact, then the request for a hearing will be granted. If EPA denies a hearing request, EPA will base its decision on the written submission.

(e) EPA will notify the applicant of its decision within 60 days after EPA receives the appeal described in paragraph (a) of this section or within 60 days after completion of a hearing described in paragraph (c) of this section.

(f) The filing of an appeal from the denial of an exemption shall not act to stay the applicant's legal obligations under a test rule promulgated under section 4 of the Act.

§ 790.93 Termination of conditional exemption.

(a) EPA shall terminate a conditional exemption if it determines that:

(1) The test which provided the basis for approval of the exemption application has not been started by the deadlines for initiation of testing adopted in the test rule or modified in accordance with § 790.55; or

(2) Data required by the test rule have not been generated in accordance with the test standards or submitted in accordance with the deadlines for submission of test data that were adopted in the test rule or modified in accordance with § 790.55; or

(3) The testing has not been conducted or the data have not been generated in accordance with the Good Laboratory Practice requirements in part 792 of this chapter.

(b) If EPA determines that one or more of the criteria listed in paragraph (a) of this section has been met, EPA will notify each holder of an affected conditional exemption by certified mail or FEDERAL REGISTER notice of EPA's intent to terminate that conditional exemption.

(c) Within 30 days after receipt of a letter of notification or publication of a notice in the FEDERAL REGISTER that EPA intends to terminate a conditional exemption, the exemption holder may submit information to rebut EPA's preliminary decision or notify EPA by letter of its intent to conduct the required test pursuant to the test standard established in the final test rule. Such a letter of intent shall contain all of the information required by § 790.45(c).

(d)(1) The exemption holder may also include a request for a hearing. Hearings will be held in accordance with the procedures set forth in § 790.97.

(2) Hearing requests must be in writing and must be received by EPA within 30 days after receipt of the letter or publication in the FEDERAL REGISTER notice described in paragraph (b) of this section.

(e) EPA will notify the exemption holder by certified letter or by FEDERAL REGISTER notice of EPA's final decision concerning termination of conditional exemptions and will give instructions as to what actions the former exemption holder must take to avoid being found in violation of the test rule.

§ 790.97 Hearing procedures.

(a) Hearing requests must be in writing to EPA and must include the applicant's basis for appealing EPA's decision.

(b) If more than one applicant has requested a hearing on similar grounds, all of those appeals will be considered at the same hearing unless confidentiality claims preclude a joint hearing.

(c) EPA will notify each applicant of EPA's decision within 60 days after the hearing.

§ 790.99 Statement of financial responsibility.

Each applicant for an exemption shall submit the following sworn statement with his or her application:

I understand that if this application is granted before the reimbursement period described in section 4(c)(3)(B) of TSCA expires, I must pay fair and equitable reimbursement to the person or persons who incurred or shared in the costs of complying with the requirement to submit data and upon whose data the granting of my application was based.

APPENDIX A TO SUBPART E OF PART 790—SCHEDULE FOR DEVELOPING CONSENT AGREEMENTS AND TEST RULES

EPA intends to follow the schedule set forth in this Appendix to evaluate testing candidates, conduct negotiations, develop consent agreements where appropriate, and propose and promulate test rules in those instances where testing can be required under section 4(a) of TSCA but agreement cannot be reached in timely manner on a consent agreement. Where deadlines are imposed by the statute, they are binding on EPA and will be observed by the Agency. The remaining dates represent targets that EPA intends to meet.

This schedule is based on what EPA currently believes are reasonable target dates. As EPA gains experience with the process and determines the feasibility of these schedules, it may adjust the schedule accordingly. EPA will solicit public comment before implementing any changes in the schedule.

Week [1]	Event
0	Receive ITC report, recommendation.

Week [1]	Event
2	Publish ITC report, 8(a) and 8(d) notices, and invitation for public participation in negotiations.
3–6	Comment period on ITC report.
6	Public focus meeting.
7–14	8(a) and 8(d) reporting period.
22	Public meeting on course-setting decision and deadline for requests to participate in negotiations.
22–30	Negotiations.
32	EPA decision point: consent agreement or test rule.

[1] The dates contained in the left-hand column are calculated from the date EPA receives the ITC report recommending a chemical for testing.

Week	Consent Agreement	Week	Test Rule
36–40	Comment period on consent agreement	32–60	Rule preparation, agency review and sign-off.
42	Comment resolution meeting if necessary.	62	Publish proposed rule in FEDERAL REGISTER.[1]
48	Sign-off consent agreement and FEDERAL REGISTER notice.	70–106	Agency reviews comments; preparation of final rule or no-test decision, agency review and sign-off.[1]
50	Publish FEDERAL REGISTER notice	108	Publish final rule or no-test decision in FEDERAL REGISTER.[1]

[1] As stated in § 790.26, EPA may publish an Advance Notice of Proposed Rulemaking (ANPR) where the testing recommendations of the ITC raise unusually novel and complex issues that require additional Agency review and opportunity for public comment. EPA intends to publish such ANPRs by Week 62 following receipt of the initial ITC report; to publish a proposed rule or decision-not-to-test by Week 108; and to publish a final rule or notice terminating the rulemaking process by Week 154.

[51 FR 23717, June 30, 1986]

PART 791—DATA REIMBURSEMENT

Subpart A—General Provisions

Sec.
791.1 Scope and authority.
791.2 Applicability.
791.3 Definitions.

Subpart B—Hearing Procedures

791.20 Initiation of reimbursement proceeding.
791.22 Consolidation of hearings.
791.27 Pre-hearing preparation.
791.29 Appointment of hearing officer.
791.30 Hearing procedures.
791.31 Expedited procedures.
791.34 Serving of notice.
791.37 The award.
791.39 Fees and expenses.

Subpart C—Basis for Proposed Order

791.40 Basis for the proposed order.
791.45 Processors.
791.48 Production volume.
791.50 Costs.
791.52 Multiple tests.

Subpart D—Review

791.60 Review.

Subpart E—Final Order

791.85 Availability of final Agency order.

Subpart F—Prohibited Acts

791.105 Prohibited acts.

AUTHORITY: 15 U.S.C. 2603 and 2607.

SOURCE: 48 FR 31791, July 11, 1983, unless otherwise noted.

Subpart A—General Provisions

§ 791.1 Scope and authority.

(a) This part establishes procedures and criteria to be used in determining fair amounts of reimbursement for testing costs incurred under section 4(a) of the Toxic Substances Control Act (TSCA) (15 U.S.C. 2603(a)).

(b) Section 4(c) of TSCA requires EPA to develop rules for the determination of fair and equitable reimbursement (15 U.S.C. 2603 (c)).

§ 791.2 Applicability.

(a) This rule is potentially applicable to all manufacturers, importers and processors who may be required by a specific test rule promulgated under section 4(a) of TSCA to conduct tests and submit data, and who seek the assistance of the Administrator in determining the amount or method of reimbursement. Persons subject to a test rule have an obligation from the date the test rule becomes effective until the end of the reimbursement period, either to test or to obtain an exemption and pay reimbursement.

(b) The provisions of this rule will take effect only when private efforts to resolve a dispute have failed and a manufacturer or processor requests EPA's assistance.

§ 791.3 Definitions.

Terms defined in the Act, and not explicitly defined herein, are used with the meanings given in the Act.

(a) *The Act* refers to the Toxic Substances Control Act (TSCA) (15 U.S.C. 2601 *et seq.*).

(b) *The Agency* or *EPA* refers to the Environmental Protection Agency.

(c) *Byproduct* refers to a chemical substance produced without a separate commercial intent during the manufacture, processing, use or disposal of another chemical substance or mixture.

(d) *Dispute* refers to a present controversy between parties subject to a test rule over the amount or method of reimbursement for the cost of developing health and environmental data on the test chemical.

(e) *Exemption holder* refers to a manufacturer or processor, subject to a test rule, that has received an exemption under sections 4(c)(1) or 4(c)(2) of TSCA from the requirement to conduct a test and submit data.

(f) *Impurity* refers to a chemical substance unintentionally present with another chemical substance or mixture.

(g) A *party* refers to a person subject to a section 4 test rule, who:

(1) Seeks reimbursement from another person under these rules, or

(2) From whom reimbursement is sought under these rules.

(h) *Reimbursement period* refers to a period that begins when the data from the last non-duplicative test to be completed under a test rule is submitted to EPA and ends after an amount of time equal to that which had been required to develop that data or after 5 years, whichever is later.

(i) *Small business* refers to a manufacturer or importer whose annual sales, when combined with those of its parent company (if any) are less than $30 million.

(j) *Test rule* refers to a regulation ordering the development of data on health or environmental effects or chemical fate for a chemical substance or mixture pursuant to TSCA section 4(a).

Subpart B—Hearing Procedures

§ 791.20 Initiation of reimbursement proceeding.

(a) When persons subject to a test rule are unable to reach an agreement on the amount or method of reimbursement for test data development as described in TSCA section 4(c)(3)(A), any of them may initiate a proceeding by filing two signed copies of a request for a hearing with a regional office of the American Arbitration Association and mailing a copy of the request to EPA, and to each person from whom they seek reimbursement, or who seeks reimbursement from them.

(b) The request for hearing must contain the following:

(1) The names and addresses of the filing party and its counsel, if any.

(2) Identification of the test rule under which the dispute arose.

(3) A list of the parties from whom reimbursement is sought or who are seeking reimbursement, a brief description of the attempts to reach agreement and a concise explanation of the issues on which the parties are unable to agree.

(c) The request for a hearing shall be accompanied by the appropriate administrative fee, as provided in a current Fee Schedule of the American Arbitration Association.

§ 791.22 Consolidation of hearings.

(a) Promptly upon receipt of the request for a hearing, the Administrator will publish a notice in the FEDERAL REGISTER, advising those subject to the test rule that a request for a hearing has been made.

(b) Any other person wishing to participate in the hearing shall so notify EPA within 45 days of the FEDERAL REGISTER notice. EPA will promptly inform the regional office of the American Arbitration Association where the request has been filed of the additional parties.

§ 791.27 Pre-hearing preparation.

(a) *Responses to requests for hearings.* After filing of the request for hearing, if any other party desires to file an answer it shall be made in writing and filed with the American Arbitration Association, and a copy thereof shall

be mailed to the other parties within a period of fourteen days from the date of receiving the complete list of parties. After the hearing officer is appointed, however, no new or different claim may be submitted except with the hearing officer's consent.

(b) *Pre-hearing conference.* At the request of the parties or at the discretion of the American Arbitration Association, a pre-hearing conference with a representative of the American Arbitration Association and the parties or their counsel will be scheduled in appropriate cases to arrange for an exchange of information and the stipulation of uncontested facts so as to expedite the proceedings.

(c) *Fixing of locale.* The parties may mutually agree on the locale where the hearing is to be held. If the locale is not designated within 45 days from the time the complete list of parties is received, the American Arbitration Association shall have power to determine the locale. Its decision shall be final and binding. If any party requests, and informs the other parties of its request, that the hearing be held in a specific locale and the other parties file no objection thereto within 14 days of the request, the locale shall be the one requested.

(d) *Time and place.* The hearing officer shall fix the time and place for each hearing. The American Arbitration Association will mail notice to each party at least 14 days in advance.

§ 791.29 Appointment of hearing officer.

(a) *Qualifications of hearing officer.* All hearing officers shall be neutral, subject to disqualification for the reasons specified in paragraph (f) of this section.

(b) *Appointment from panel.* Promptly after receiving the complete list of parties at the close of the notice period described in § 791.22, the American Arbitration Association shall submit simultaneously to each party to the dispute an identical list of names. Each party to the dispute shall have thirty days from the mailing date in which to cross off any names objected to, number the remaining names to indicate the order of preference, and return the list to the American Arbitration Association. If a party does not return the list within the time specified, all persons named therein shall be deemed acceptable to that party. From among the persons who have been approved on all lists, and in accordance with the designated order of mutual preference, the American Arbitration Association shall invite the acceptance of a hearing officer to serve. If the parties fail to agree upon any of the persons named, or if acceptable hearing officers are unable to act, or if for any other reason the appointment cannot be made from the submitted lists, the American Arbitration Association shall have the power to make the appointment without the submission of any additional list.

(c) *Nationality of hearing officer in international dispute.* If one of the parties is a national or resident of a country other than the United States, the hearing officer shall upon the request of any party, be appointed from among the nationals of a country other than that of the parties.

(d) *Number of hearing officers.* The dispute shall be heard and determined by one hearing officer unless the American Arbitration Association, in its discretion, directs that a greater number of hearing officers be appointed.

(e) *Notice of appointment.* Notice of the appointment of the hearing officer, together with a copy of these rules, and the signed acceptance of the hearing officer shall be filed prior to the opening of the first hearing.

(f) *Disclosure and challenge procedure.* A person appointed as hearing officer shall disclose to the American Arbitration Association any circumstances likely to affect impartiality, including any bias or any financial or personal interest in the result of the hearing or any past or present relationship with the parties or their counsel. Upon receipt of such information from such hearing officer or other source, the American Arbitration Association shall communicate such information to the parties, and, if it deems it appropriate to do so, to the hearing officer and others. Thereafter, the American Arbitration Association shall determine whether the hearing officer should be disqualified and shall inform the parties of its decision, which shall be conclusive.

(g) *Vacancies.* If any hearing officer should resign, die, withdraw, refuse, be disqualified or be unable to perform the duties of the office, the American Arbitration Association may, on proof satisfactory to it, declare the office vacant. Vacancies shall be filled in accordance with the applicable provisions of these rules and the matter shall be reheard unless the parties shall agree otherwise.

§ 791.30 Hearing procedures.

(a) *Representation by counsel.* Any party may be represented by counsel. A party intending to be so represented shall notify the other parties and the American Arbitration Association of the name and address of counsel at least 5 days prior to the date set for the hearing at which counsel is first to appear. When a hearing is initiated by counsel, or where an attorney replies for the other party, such notice is deemed to have been given.

(b) *Stenographic record.* The American Arbitration Association shall make the necessary arrangements for the taking of a stenographic record. The parties shall share the cost of such record.

(c) *Attendance at hearings.* The hearing officer shall have the power to require the exclusion of anyone, including a party or other essential person, during the testimony of any witness to protect confidential business information. It shall be discretionary with the hearing officer to determine the propriety of the attendance of any other person.

(d) *Oaths.* Hearing officers shall swear or affirm their neutrality and their dedication to a fair and equitable resolution. Witnesses shall swear or affirm that they are telling the truth.

(e) *Order of proceedings.* (1) A hearing shall be opened by the filing of the oath of the hearing officer and by the recording of the place, time and date of the hearing, the presence of the hearing officer and parties, and counsel, if any, and by the receipt by the hearing officer of the request for hearing and answer, if any.

(2) The hearing officer may, at the beginning of the hearing, ask for statements clarifying the issues involved.

(3) The party or parties seeking reimbursement shall then present a claim and proofs and witnesses, who shall submit to questions or other examination. The party or parties from whom reimbursement is sought shall then present a defense and proofs and witnesses, who shall submit to questions or other examination. The hearing officer has discretion to vary this procedure but shall afford full and equal opportunity to all parties for the presentation of any material or relevant proofs.

(4) Exhibits, when offered by any party, shall be received in evidence by the hearing officer. The names and addresses of all witnesses and exhibits in order received shall be made a part of the record.

(f) *Hearing in the absence of a party.* A hearing may proceed in the absence of any party which, after due notice, fails to be present or fails to obtain an adjournment. An award shall not be made solely on the default of a party. The hearing officer shall require the parties who are present to submit such evidence as the hearing officer may require for the making of an award.

(g) *Evidence.* (1) The parties may offer such evidence as they desire and shall produce such additional evidence as the hearing officer may deem necessary to an understanding and determination of the dispute. The hearing officer shall be the judge of the relevancy and materiality of the evidence offered and conformity to legal rules of evidence shall not be necessary. All evidence shall be taken in the presence of all the hearing officers and of all the parties, except where any of the parties is absent in default, has waived the right to be present, or has been excluded by the hearing officer to protect confidential business information.

(2) All documents not filed with the hearing officer at the hearing, but arranged for by agreement of the parties, shall be filed with the American Arbitration Association for transmission to the hearing officer, according to the agreed-upon schedule. All parties shall be afforded opportunity to examine such documents.

(h) *Evidence by affidavit and filing of documents.* The hearing officer shall receive and consider the evidence of witnesses by affidavit, but shall give it only such weight as the hearing officer

deems it entitled to after consideration of any objections made to its admission.

(i) *Closing of hearings.* The hearing officer shall specifically inquire of all parties whether they have any further proofs to offer or witnesses to be heard. Upon receiving negative replies, the hearing officer shall declare the hearings closed and record the time of closing of the hearing. If briefs are to be filed, the hearings shall be declared closed as of the final date set by the hearing officer for the receipt of briefs. If documents are to be filed as provided for in paragraph (g)(2) of this section and the date set for their receipt is later than that set for the receipt of briefs, the later date shall be the date of closing the hearings.

(j) *Reopening of hearings.* The hearings may be reopened on the hearing officer's own motion, or upon application of a party at any time before the award is made. If the reopening of the hearings would prevent the making of the award within the specified time the matter may not be reopened, unless the parties agree upon the extension of the time limit.

(k) *Waiver of oral hearings.* The parties may provide, by written agreement, for the waiver of oral hearings. If the parties are unable to agree as to the procedure, the American Arbitration Association shall specify a fair and equitable procedure.

(l) *Waiver of rules.* Any party who proceeds with the hearing after knowledge that any provision or requirement of these rules has not been complied with and who fails to state objection thereto in writing, shall be deemed to have waived the right to object.

(m) *Extensions of time.* The parties may modify any period of time by mutual agreement. The American Arbitration Association for good cause may extend any period of time established by these rules, except the time for making the award. (§ 791.37(a)) The American Arbitration Association shall notify the parties of any such extension of time and its reason therefor.

(n) *Communication with hearing officer.* There shall be no direct communication between the parties and a hearing officer other than at oral hearings. Any other oral or written communications from the parties to the hearing officer shall be directed to the American Arbitration Association for transmittal to the hearing officer.

§ 791.31 Expedited procedures.

Unless the American Arbitration Association in its discretion determines otherwise, the Expedited Procedures described in this section shall be applied in any case where the total claim of any party does not exceed $5,000, exclusive of interest and hearing costs, and may be applied in other cases if the parties agree.

(a) *Application of rules.* The expedited hearings will be conducted according to the same procedures as the regular ones, except for those specifically changed by the expedited rules in this section, § 791.31.

(b) *Notice by telephone.* The parties shall accept all notices from the American Arbitration Association by telephone. Such notices by the American Arbitration Association shall subsequently be confirmed in writing to the parties. Notwithstanding the failure to confirm in writing any notice or objection hereunder, the proceeding shall nonetheless be valid if notice or obligation has, in fact, been given by telephone.

(c) *Appointment and qualifications of hearing officers.* The American Arbitration Association shall submit simultaneously to each party to the dispute an identical list of five persons from which one hearing officer shall be appointed. Each party shall have the right to strike two names from the list on a peremptory basis. The list is returnable to the American Arbitration Association within 10 days from the date of mailing. If for any reasons the appointment cannot be made from the list, the American Arbitration Association shall have the authority to make the appointment without the submission of additional lists. Such appointment shall be subject to disqualification for the reasons specified in § 791.29(f). The parties shall be given notice by telephone by the American Arbitration Association of the appointment of the hearing officer. The parties shall notify the American Arbitration Association, by telephone, within 7 days of any objections to the hearing

officer(s) appointed. Any objection by a party to such hearing officer shall be confirmed in writing to the American Arbitration Association with a copy to the other parties.

(d) *Time and place of hearing.* The hearing officer shall fix the date, time and place of the hearing. The American Arbitration Association will notify the parties by telephone, 7 days in advance of the hearing date. Formal notice of hearing will be sent by the American Arbitration Association to the parties.

(e) *The hearing.* Generally, the hearing shall be completed within 1 day. The hearing officer, for good cause shown, may schedule an additional hearing to be held within 5 days.

(f) *Time of award.* Unless otherwise agreed to by the parties, the Award shall be rendered not later than 15 business days from the date of the closing of the hearing.

§ 791.34 Serving of notice.

(a) Each party shall be deemed to have consented that any papers, notices or process necessary or proper for the initiation or continuation of a hearing under these rules and for any appeal to EPA or any court action in connection therewith may be served upon such party by mail addressed to such party or its attorney at its last known address or by personal service, within or without the state wherein the arbitration is to be held (whether such party be within or without the United States of America), provided that reasonable opportunity to be heard with regard thereto has been granted such party.

(b) The American Arbitration Association shall, upon the written request of a party, furnish to such party, at its expense, certified facsimiles of any papers in the American Arbitration Association's possession that may be required in appeal to EPA or judicial proceedings relating to the hearing.

§ 791.37 The award.

(a) *Time of award.* The award shall be made promptly by the hearing officer and, unless otherwise agreed by the parties, no later than 30 days from the date of closing the hearings, or if oral hearings have been waived, from the date of transmitting the final statements and proofs to the hearing officer.

(b) *Form of award.* The award shall be in writing and shall be signed either by the sole hearing officer or by at least a majority if there is more than one. It shall contain a concise statement of its basis and rationale, and a timetable for payment of any ordered reimbursement.

(c) *Delivery of award to parties.* Parties shall accept as legal delivery of the award the delivery of the award or a true copy thereof by certified mail to the party at its last known address or to its attorney, or by personal service.

§ 791.39 Fees and expenses.

(a) *Administrative fees.* (1) As a not-for-profit organization, the American Arbitration Association shall prescribe an Administrative Fee Schedule and a Refund Schedule to compensate it for the cost of providing administrative services. The schedule in effect at the time of filing or the time of refund shall be applicable.

(2) The administrative fees shall be advanced by the initiating party or parties, subject to final apportionment by the hearing officer in the award. The administrative fee is increased by 10 percent of the original for each additional party.

(3) Fees and expenses in excess of the limit contained in section 26(b) of TSCA ($2,500 per person, or $100 per small business) will be paid by EPA.

(b) *Expenses.* Subject to paragraph (a)(3) of this section, all expenses of the hearing, including the cost of recording (though not transcribing) the hearing and required traveling and other expenses of the hearing officer and of American Arbitration Association representatives, and the expenses of any witness or the cost of any proofs produced at the direct request of the hearing officer, shall be borne equally by the parties, unless they agree otherwise, or unless the hearing officer, in the award, assesses such expenses or any part thereof against any specified party or parties.

(c) *Hearing officer's fee.* Hearing officers will normally serve without a fee. In prolonged or special cases the American Arbitration Association in consultation with the Administrator may

determine that payment of a fee by the parties is appropriate and may establish a reasonable amount, taking into account the extent of service by the hearing officer and other relevant circumstances of the case. Any arrangements for compensation shall be made through the American Arbitration Association and not directly between the parties and the hearing officer.

Subpart C—Basis for Proposed Order

§ 791.40 Basis for the proposed order.

(a) The hearing officer shall propose a fair and equitable amount of reimbursement. The formula in paragraph (b) of this section shall be presumed to be fair and equitable as applied to all persons subject to a test rule. However, the hearing officer has the discretion to modify the formula, or to use some other basis for allocation if necessary. Additional factors that may be taken into account include, but are not limited to, relative amounts of exposure attributable to each person and the effect of the reimbursement share on competitive position.

(b) In general, each person's share of the test cost shall be in proportion to its share of the total production volume of the test chemical:

$$R_x = C\frac{V_x}{V_t}$$

Where:

R=the reimbursement share owed by company X.

C=the total cost of the testing required by the test rule.

V_x=the volume of the test chemical produced or imported by company X over the period defined by § 791.48.

V_t=the total volume of the test chemical produced or imported over the period defined by § 791.48.

(c) The burden of proposing modifications to the formula shall lie with the party requesting the modification.

§ 791.45 Processors.

(a) Generally, processors will be deemed to have fulfilled their testing and reimbursement responsibilities indirectly, through higher prices passed on by those directly responsible, the manufacturers. There are three circumstances in which processors will have a responsibility to provide reimbursement directly to those paying for the testing:

(1) When a test rule or subsequent FEDERAL REGISTER notice pertaining to a test rule expressly obligates processors as well as manufacturers to assume direct testing and data reimbursement responsibilities.

(2) When one or more manufacturers demonstrate to the hearing officer that it is necessary to include processors in order to provide fair and equitable reimbursement in a specific case.

(3) When one or more processors voluntarily agree to reimburse manufacturers for a portion of test costs. Only those processors who volunteer will incur the obligation.

(b) A hearing including processors shall be initiated in the same way as those including only manufacturers. Voluntary negotiations must be attempted in good faith first, and the request for a hearing must contain the names of the parties and a description of the unsuccessful negotiations.

(c) When processors as well as manufacturers are required to provide reimbursement, the hearing officer will decide for each case how the reimbursement should be allocated among the participating parties. When a test rule is applicable solely to processors, the hearing officer will apply the formula to the amount of the test chemical purchased or processed.

§ 791.48 Production volume.

(a) Production volume will be measured over a period that begins one calendar year before publication of the final test rule in the FEDERAL REGISTER and continues up to the latest data available upon resolution of a dispute.

(b) For the purpose of determining fair reimbursement shares, production volume shall include amounts of the test chemical imported in bulk form and mixtures, and the total domestic production of the chemical including that produced as a byproduct. Impurities will not be included unless the test rule specifically includes them.

(c) Amounts of the test chemical manufactured for export will not be included unless covered by a finding under TSCA section 12(a)(2).

(d) Chemicals excluded from the jurisdiction of TSCA by section 3(2)(B) need not be included in the computation of production volume. (Chemicals used as intermediates to produce pesticides are covered by TSCA.)

(e) The burden of establishing the fact that particular amounts of the test chemical are produced for exempt purposes lies with the party seeking to exclude those amounts from the calculation of his production volume.

§ 791.50 Costs.

(a) All costs reasonable and necessary to comply with the test rule, taking into account the practices of other laboratories in conducting similar tests, are eligible for reimbursement. Necessary costs include:

(1) Direct and indirect costs of planning, conducting, analyzing and submitting the test results to EPA.

(2) A reasonable profit, and a reasonable rate of interest and depreciation on the tester's initial capital investment.

(3) The cost of repeating or repairing tests where failure was demonstrably due to some cause other than negligence of the tester.

(b) Costs attributable to tests beyond those specified by EPA shall not be eligible for reimbursement under this rule.

§ 791.52 Multiple tests.

When more than one of a particular kind of test required by the test rule is performed, the additional costs will be shared among all those holding exemptions. The costs of all the tests will be added together and each exemption holder shall be responsible for a share of the total which is equal to its share of the total production of the test chemical. The exemption holders shall divide their shares between test sponsors in proportion to the costs of their respective tests. Those sponsoring a particular test do not have to obtain exemptions for that test and therefore do not have reimbursement responsibilities for the same tests done by others.

Subpart D—Review

§ 791.60 Review.

(a) The hearing officer's proposed order shall become the final Agency order 30 days after issuance unless within the 30-day period one of the parties requests Agency review or the Administrator of his own initiative decides to review the proposed order.

(b) The proposed order may be reviewed upon the record of the hearing and the petitions for review. If necesary, the Administrator may order the transcription of the stenographic record of the hearing, written briefs, oral arguments or any other reasonable aids to making an equitable decision.

(c) The final Agency order may be reviewed in federal court as provided by 26 U.S.C. 2603(c).

Subpart E—Final Order

§ 791.85 Availablity of final Agency order.

The final Agency order shall be available to the public for inspection and copying pursuant to 5 U.S.C. 552(a)(2), subject to necessary confidentiality restrictions.

Subpart F—Prohibited Acts

§ 791.105 Prohibited acts.

Failure to provide information required by the Agency or to pay the amounts awarded under this rule within time alloted in the final order shall constitute a violation of 15 U.S.C. 2614(1) or 2614(3).

PART 792—GOOD LABORATORY PRACTICE STANDARDS

Subpart A—General Provisions

Sec.
792.1 Scope.
792.3 Definitions.
792.10 Applicability to studies performed under grants and contracts.
792.12 Statement of compliance or non-compliance.
792.15 Inspection of a testing facility.
792.17 Effects of non-compliance.

Subpart B—Organization and Personnel

792.29 Personnel.

792.31 Testing facility management.
792.33 Study director.
792.35 Quality assurance unit.

Subpart C—Facilities

792.41 General.
792.43 Test system care facilities.
792.45 Test system supply facilities.
792.47 Facilities for handling test, control, and reference substances.
792.49 Laboratory operation areas.
792.51 Specimen and data storage facilities.

Subpart D—Equipment

792.61 Equipment design.
792.63 Maintenance and calibration of equipment.

Subpart E—Testing Facilities Operation

792.81 Standard operating procedures.
792.83 Reagents and solutions.
792.90 Animal and other test system care.

Subpart F—Test, Control, and Reference Substances

792.105 Test, control, and reference substance characterization.
792.107 Test, control, and reference substance handling.
792.113 Mixtures of substances with carriers.

Subpart G—Protocol for and Conduct of A Study

792.120 Protocol.
792.130 Conduct of a study.
792.135 Physical and chemical characterization studies.

Subparts H–I [Reserved]

Subpart J—Records and Reports

792.185 Reporting of study results.
792.190 Storage and retrieval of records and data.
792.195 Retention of records.

AUTHORITY: 15 U.S.C. 2603.

SOURCE: 54 FR 34043, Aug. 17, 1989, unless otherwise noted.

Subpart A—General Provisions

§ 792.1 Scope.

(a) This part prescribes good laboratory practices for conducting studies relating to health effects, environmental effects, and chemical fate testing. This part is intended to ensure the quality and integrity of data submitted pursuant to testing consent agreements and test rules issued under section 4 of the Toxic Substances Control Act (TSCA) (Pub. L. 94–469, 90 Stat. 2006, 15 U.S.C. 2603 *et seq.*).

(b) This part applies to any study described by paragraph (a) of this section which any person conducts, initiates, or supports on or after September 18, 1989.

(c) It is EPA's policy that all data developed under section 5 of TSCA be in accordance with provisions of this part. If data are not developed in accordance with the provisions of this part, EPA will consider such data insufficient to evaluate the health and environmental effects of the chemical substances unless the submitter provides additional information demonstrating that the data are reliable and adequate.

§ 792.3 Definitions.

As used in this part the following terms shall have the meanings specified:

Batch means a specific quantity or lot of a test, control, or reference substance that has been characterized according to § 792.105(a).

Carrier means any material, including but not limited to, feed, water, soil, and nutrient media, with which the test substance is combined for administration to a test system.

Control substance means any chemical substance or mixture, or any other material other than a test substance, feed, or water, that is administered to the test system in the course of a study for the purpose of establishing a basis for comparison with the test substance for chemical or biologicaI measurements.

EPA means the U.S. Environmental Protection Agency.

Experimental start date means the first date the test substance is applied to the test system.

Experimental termination date means the last date on which data are collected directly from the study.

FDA means the U.S. Food and Drug Administration.

Person includes an individual, partnership, corporation, association, scientific or academic establishment, government agency, or organizational unit thereof, and any other legal entity.

Quality assurance unit means any person or organizational element, except

the study director, designated by testing facility management to perform the duties relating to quality assurance of the studies.

Raw data means any laboratory worksheets, records, memoranda, notes, or exact copies thereof, that are the result of original observations and activities of a study and are necessary for the reconstruction and evaluation of the report of that study. In the event that exact transcripts of raw data have been prepared (e.g., tapes which have been transcribed verbatim, dated, and verified accurate by signature), the exact copy or exact transcript may be substituted for the original source as raw data. ''Raw data'' may include photographs, microfilm or microfiche copies, computer printouts, magnetic media, including dictated observations, and recorded data from automated instruments.

Reference substance means any chemical substance or mixture, or analytical standard, or material other than a test substance, feed, or water, that is administered to or used in analyzing the test system in the course of a study for the purposes of establishing a basis for comparison with the test substance for known chemical or biological measurements.

Specimen means any material derived from a test system for examination or analysis.

Sponsor means:

(1) A person who initiates and supports, by provision of financial or other resources, a study;

(2) A person who submits a study to the EPA in response to a TSCA section 4(a) test rule and/or a person who submits a study under a TSCA section 4 testing consent agreement or a TSCA section 5 rule or order to the extent the agreement, rule or order references this part; or

(3) A testing facility, if it both initiates and actually conducts the study.

Study means any experiment at one or more test sites, in which a test substance is studied in a test system under laboratory conditions or in the environment to determine or help predict its effects, metabolism, environmental and chemical fate, persistence, or other characteristics in humans, other living organisms, or media. The term ''study'' does not include basic exploratory studies carried out to determine whether a test substance or a test method has any potential utility.

Study completion date means the date the final report is signed by the study director.

Study director means the individual responsible for the overall conduct of a study.

Study initiation date means the date the protocol is signed by the study director.

Test substance means a substance or mixture administered or added to a test system in a study, which substance or mixture is used to develop data to meet the requirements of a TSCA section 4(a) test rule and/or is developed under a TSCA section 4 testing consent agreement or section 5 rule or order to the extent the agreement, rule or order references this part.

Test system means any animal, plant, microorganism, chemical or physical matrix, including but not limited to, soil or water, or components thereof, to which the test, control, or reference substance is administered or added for study. ''Test system'' also includes appropriate groups or components of the system not treated with the test, control, or reference substance.

Testing facility means a person who actually conducts a study, i.e., actually uses the test substance in a test system. ''Testing facility'' encompasses only those operational units that are being or have been used to conduct studies.

TSCA means the Toxic Substances Control Act (15 U.S.C, 2601 *et seq.*)

Vehicle means any agent which facilitates the mixture, dispersion, or solubilization of a test substance with a carrier.

§ 792.10 Applicability to studies performed under grants and contracts.

When a sponsor or other person utilizes the services of a consulting laboratory, contractor, or grantee to perform all or a part of a study to which this part applies, it shall notify the consulting laboratory, contractor, or grantee that the service is, or is part of, a study that must be conducted in compliance with the provisions of this part.

§ 792.12 Statement of compliance or non-compliance.

Any person who submits to EPA a test required by a testing consent agreement or a test rule issued under section 4 of TSCA shall include in the submission a true and correct statement, signed by the sponsor and the study director, of one of the following types:

(a) A statement that the study was conducted in accordance with this part; or

(b) A statement describing in detail all differences between the practices used in the study and those required by this part; or

(c) A statement that the person was not a sponsor of the study, did not conduct the study, and does not know whether the study was conducted in accordance with this part.

§ 792.15 Inspection of a testing facility.

(a) A testing facility shall permit an authorized employee or duly designated representative of EPA or FDA, at reasonable times and in a reasonable manner, to inspect the facility and to inspect (and in the case of records also to copy) all records and specimens required to be maintained regarding studies to which this part applies. The records inspection and copying requirements shall not apply to quality assurance unit records of findings and problems, or to actions recommended and taken, except the EPA may seek production of these records in litigation or formal adjudicatory hearings.

(b) EPA will not consider reliable for purposes of showing that a chemical substance or mixture does not present a risk of injury to health or the environment any data developed by a testing facility or sponsor that refuses to permit inspection in accordance with this part. The determination that a study will not be considered reliable does not, however, relieve the sponsor of a required test of any obligation under any applicable statute or regulation to submit the results of the study to EPA.

(c) Since a testing facility is a place where chemicals are stored or held, it is subject to inspection under section 11 of TSCA.

§ 792.17 Effects of non-compliance.

(a) The sponsor or any other person who is conducting or has conducted a test to fulfill the requirements of a testing consent agreement or a test rule issued under section 4 of TSCA will be in violation of section 15 of TSCA if:

(1) The test is not being or was not conducted in accordance with any requirement of this part;

(2) Data or information submitted to EPA under this part (including the statement required by § 792.12) include information or data that are false or misleading, contain significant omissions, or otherwise do not fulfill the requirements of this part; or

(3) Entry in accordance with § 792.15 for the purpose of auditing test data or inspecting test facilities is denied. Persons who violate the provisions of this part may be subject to civil or criminal penalties under section 16 of TSCA, legal action in United States district court under section 17 of TSCA, or criminal prosecution under 18 U.S.C. 2 or 1001.

(b) EPA, at its discretion, may not consider reliable for purposes of showing that a chemical substance or mixture does not present a risk of injury to health or the environment any study which was not conducted in accordance with this part. EPA, at its discretion, may rely upon such studies for purposes of showing adverse effects. The determination that a study will not be considered reliable does not, however, relieve the sponsor of a required test of the obligation under any applicable statute or regulation to submit the results of the study to EPA.

(c) If data submitted to fulfill a requirement of a testing consent agreement or a test rule issued under section 4 of TSCA are not developed in accordance with this part, EPA may determine that the sponsor has not fulfilled its obligations under section 4 of TSCA and may require the sponsor to develop data in accordance with the requirements of this part in order to satisfy such obligations.

Subpart B—Organization and Personnel

§ 792.29 Personnel.

(a) Each individual engaged in the conduct of or responsible for the supervision of a study shall have education, training, and experience, or combination thereof, to enable that individual to perform the assigned functions.

(b) Each testing facility shall maintain a current summary of training and experience and job description for each individual engaged in or supervising the conduct of a study.

(c) There shall be a sufficient number of personnel for the timely and proper conduct of the study according to the protocol.

(d) Personnel shall take necessary personal sanitation and health precautions designed to avoid contamination of test, control, and reference substances and test systems.

(e) Personnel engaged in a study shall wear clothing appropriate for the duties they perform. Such clothing shall be changed as often as necessary to prevent microbiological, radiological, or chemical contamination of test systems and test, control, and reference substances.

(f) Any individual found at any time to have an illness that may adversely affect the quality and integrity of the study shall be excluded from direct contact with test systems, test, control, and reference substances and any other operation or function that may adversely affect the study until the condition is corrected. All personnel shall be instructed to report to their immediate supervisors any health or medical conditions that may reasonably be considered to have an adverse effect on a study.

§ 792.31 Testing facility management.

For each study, testing facility management shall:

(a) Designate a study director as described in § 792.33 before the study is initiated.

(b) Replace the study director promptly if it becomes necessary to do so during the conduct of a study.

(c) Assure that there is a quality assurance unit as described in § 792.35.

(d) Assure that test, control, and reference substances or mixtures have been appropriately tested for identity, strength, purity, stability, and uniformity, as applicable.

(e) Assure that personnel, resources, facilities, equipment, materials and methodologies are available as scheduled.

(f) Assure that personnel clearly understand the functions they are to perform.

(g) Assure that any deviations from these regulations reported by the quality assurance unit are communicated to the study director and corrective actions are taken and documented.

§ 792.33 Study director.

For each study, a scientist or other professional of appropriate education, training, and experience, or combination thereof, shall be identified as the study director. The study director has overall responsibility for the technical conduct of the study, as well as for the interpretation, analysis, documentation, and reporting of results, and represents the single point of study control. The study director shall assure that:

(a) The protocol, including any change, is approved as provided by § 792.120 and is followed.

(b) All experimental data, including observations of unanticipated responses of the test system are accurately recorded and verified.

(c) Unforeseen circumstances that may affect the quality and integrity of the study are noted when they occur, and corrective action is taken and documented.

(d) Test systems are as specified in the protocol.

(e) All applicable good laboratory practice regulations are followed.

(f) All raw data, documentation, protocols, specimens, and final reports are transferred to the archives during or at the close of the study.

§ 792.35 Quality assurance unit.

(a) A testing facility shall have a quality assurance unit which shall be responsible for monitoring each study to assure management that the facilities, equipment, personnel, methods, practices, records, and controls are in

conformance with the regulations in this part. For any given study, the quality assurance unit shall be entirely separate from and independent of the personnel engaged in the direction and conduct of that study. The quality assurance unit shall conduct inspections and maintain records appropriate to the study.

(b) The quality assurance unit shall:

(1) Maintain a copy of a master schedule sheet of all studies conducted at the testing facility indexed by test substance and containing the test system, nature of study, date study was initiated, current status of each study, identity of the sponsor, and name of the study director.

(2) Maintain copies of all protocols pertaining to all studies for which the unit is responsible.

(3) Inspect each study at intervals adequate to ensure the integrity of the study and maintain written and properly signed records of each periodic inspection showing the date of the inspection, the study inspected, the phase or segment of the study inspected, the person performing the inspection, findings and problems, action recommended and taken to resolve existing problems, and any scheduled date for re-inspection. Any problems which are likely to affect study integrity found during the course of an inspection shall be brought to the attention of the study director and management immediately.

(4) Periodically submit to management and the study director written status reports on each study, noting any problems and the corrective actions taken.

(5) Determine that no deviations from approved protocols or standard operating procedures were made without proper authorization and documentation.

(6) Review the final study report to assure that such report accurately describes the methods and standard operating procedures, and that the reported results accurately reflect the raw data of the study.

(7) Prepare and sign a statement to be included with the final study report which shall specify the dates inspections were made and findings reported to management and to the study director.

(c) The responsibilities and procedures applicable to the quality assurance unit, the records maintained by the quality assurance unit, and the method of indexing such records shall be in writing and shall be maintained. These items including inspection dates, the study inspected, the phase or segment of the study inspected, and the name of the individual performing the inspection shall be made available for inspection to authorized employees or duly designated representatives of EPA or FDA.

(d) An authorized employee or a duly designated representative of EPA or FDA shall have access to the written procedures established for the inspection and may request testing facility management to certify that inspections are being implemented, performed, documented, and followed up in accordance with this paragraph.

Subpart C—Facilities

§ 792.41 General.

Each testing facility shall be of suitable size and construction to facilitate the proper conduct of studies. Testing facilities which are not located within an indoor controlled environment shall be of suitable location to facilitate the proper conduct of studies. Testing facilities shall be designed so that there is a degree of separation that will prevent any function or activity from having an adverse effect on the study.

§ 792.43 Test system care facilities.

(a) A testing facility shall have a sufficient number of animal rooms or other test system areas, as needed, to ensure: proper separation of species or test systems, isolation of individual projects, quarantine or isolation of animals or other test systems, and routine or specialized housing of animals or other test systems.

(1) In tests with plants or aquatic animals, proper separation of species can be accomplished within a room or area by housing them separately in different chambers or aquaria. Separation of species is unnecessary where the protocol specifies the simultaneous exposure of two or more species in the

same chamber, aquarium, or housing unit.

(2) Aquatic toxicity tests for individual projects shall be isolated to the extent necessary to prevent cross-contamination of different chemicals used in different tests.

(b) A testing facility shall have a number of animal rooms or other test system areas separate from those described in paragraph (a) of this section to ensure isolation of studies being done with test systems or test, control, and reference substances known to be biohazardous, including volatile substances, aerosols, radioactive materials, and infectious agents.

(c) Separate areas shall be provided, as appropriate, for the diagnosis, treatment, and control of laboratory test system diseases. These areas shall provide effective isolation for the housing of test systems either known or suspected of being diseased, or of being carriers of disease, from other test systems.

(d) Facilities shall have proper provisions for collection and disposal of contaminated water, soil, or other spent materials. When animals are housed, facilities shall exist for the collection and disposal of all animal waste and refuse or for safe sanitary storage of waste before removal from the testing facility. Disposal facilities shall be so provided and operated as to minimize vermin infestation, odors, disease hazards, and environmental contamination.

(e) Facilities shall have provisions to regulate environmental conditions (e.g., temperature, humidity, photoperiod) as specified in the protocol.

(f) For marine test organisms, an adequate supply of clean sea water or artificial sea water (prepared from deionized or distilled water and sea salt mixture) shall be available. The ranges of composition shall be as specified in the protocol.

(g) For freshwater organisms, an adequate supply of clean water of the appropriate hardness, pH, and temperature, and which is free of contaminants capable of interfering with the study shall be available as specified in the protocol.

(h) For plants, an adequate supply of soil of the appropriate composition, as specified in the protocol, shall be available as needed.

§ 792.45 Test system supply facilities.

(a) There shall be storage areas, as needed, for feed, nutrients, soils, bedding, supplies, and equipment. Storage areas for feed, nutrients, soils, and bedding shall be separated from areas where the test systems are located and shall be protected against infestation or contamination. Perishable supplies shall be preserved by appropriate means.

(b) When appropriate, plant supply facilities shall be provided. These include:

(1) Facilities, as specified in the protocol, for holding, culturing, and maintaining algae and aquatic plants.

(2) Facilities, as specified in the protocol, for plant growth, including but not limited to, greenhouses, growth chambers, light banks, and fields.

(c) When appropriate, facilities for aquatic animal tests shall be provided. These include but are not limited to aquaria, holding tanks, ponds, and ancillary equipment, as specified in the protocol.

§ 792.47 Facilities for handling test, control, and reference substances.

(a) As necessary to prevent contamination or mixups, there shall be separate areas for:

(1) Receipt and storage of the test, control, and reference substances.

(2) Mixing of the test, control, and reference substances with a carrier, e.g., feed.

(3) Storage of the test, control, and reference substance mixtures.

(b) Storage areas for test, control, and/or reference substance and for test, control, and/or reference mixtures shall be separate from areas housing the test systems and shall be adequate to preserve the identity, strength, purity, and stability of the substances and mixtures.

§ 792.49 Laboratory operation areas.

Separate laboratory space and other space shall be provided, as needed, for the performance of the routine and specialized procedures required by studies.

§ 792.51 Specimen and data storage facilities.

Space shall be provided for archives, limited to access by authorized personnel only, for the storage and retrieval of all raw data and specimens from completed studies.

Subpart D—Equipment

§ 792.61 Equipment design.

Equipment used in the generation, measurement, or assessment of data and equipment used for facility environmental control shall be of appropriate design and adequate capacity to function according to the protocol and shall be suitably located for operation, inspection, cleaning, and maintenance.

§ 792.63 Maintenance and calibration of equipment.

(a) Equipment shall be adequately inspected, cleaned, and maintained. Equipment used for the generation, measurement, or assessment of data shall be adequately tested, calibrated, and/or standardized.

(b) The written standard operating procedures required under § 792.81(b)(11) shall set forth in sufficient detail the methods, materials, and schedules to be used in the routine inspection, cleaning, maintenance, testing, calibration, and/or standardization of equipment, and shall specify, when appropriate, remedial action to be taken in the event of failure or malfunction of equipment. The written standard operating procedures shall designate the person responsible for the performance of each operation.

(c) Written records shall be maintained of all inspection, maintenance, testing, calibrating, and/or standardizing operations. These records, containing the date of the operation, shall describe whether the maintenance operations were routine and followed the written standard operating procedures. Written records shall be kept of nonroutine repairs performed on equipment as a result of failure and malfunction. Such records shall document the nature of the defect, how and when the defect was discovered, and any remedial action taken in response to the defect.

Subpart E—Testing Facilities Operation

§ 792.81 Standard operating procedures.

(a) A testing facility shall have standard operating procedures in writing, setting forth study methods that management is satisfied are adequate to insure the quality and integrity of the data generated in the course of a study. All deviations in a study from standard operating procedures shall be authorized by the study director and shall be documented in the raw data. Significant changes in established standard operating procedures shall be properly authorized in writing by management.

(b) Standard operating procedures shall be established for, but not limited to, the following:

(1) Test system room preparation.

(2) Test system care.

(3) Receipt, identification, storage, handling, mixing, and method of sampling of the test, control, and reference substances.

(4) Test system observations.

(5) Laboratory or other tests.

(6) Handling of test systems found moribund or dead during study.

(7) Necropsy of test systems or postmortem examination of test systems.

(8) Collection and identification of specimens.

(9) Histopathology.

(10) Data handling, storage and retrieval.

(11) Maintenance and calibration of equipment.

(12) Transfer, proper placement, and identification of test systems.

(c) Each laboratory or other study area shall have immediately available manuals and standard operating procedures relative to the laboratory or field procedures being performed. Published literature may be used as a supplement to standard operating procedures.

(d) A historical file of standard operating procedures, and all revisions thereof, including the dates of such revisions, shall be maintained.

§ 792.83 Reagents and solutions.

All reagents and solutions in the laboratory areas shall be labeled to indicate identity, titer or concentration,

storage requirements, and expiration date. Deteriorated or outdated reagents and solutions shall not be used.

§ 792.90 Animal and other test system care.

(a) There shall be standard operating procedures for the housing, feeding, handling, and care of animals and other test systems.

(b) All newly received test systems from outside sources shall be isolated and their health status or appropriateness for the study shall be evaluated. This evaluation shall be in accordance with acceptable veterinary medical practice or scientific methods.

(c) At the initiation of a study, test systems shall be free of any disease or condition that might interfere with the purpose or conduct of the study. If during the course of the study, the test systems contract such a disease or condition, the diseased test systems should be isolated, if necessary. These test systems may be treated for disease or signs of disease provided that such treatment does not interfere with the study. The diagnosis, authorization of treatment, description of treatment, and each date of treatment shall be documented and shall be retained.

(d) Warm-blooded animals, adult reptiles, and adult terrestrial amphibians used in laboratory procedures that require manipulations and observations over an extended period of time, or in studies that require these test systems to be removed from and returned to their test system-housing units for any reason (e.g., cage cleaning, treatment, etc.), shall receive appropriate identification (e.g., tattoo, color code, ear tag, ear punch, etc.). All information needed to specifically identify each test system within the test system-housing unit shall appear on the outside of that unit. Suckling mammals and juvenile birds are excluded from the requirement of individual identification unless otherwise specified in the protocol.

(e) Except as specified in paragraph (e)(1) of this section, test systems of different species shall be housed in separate rooms when necessary. Test systems of the same species, but used in different studies, should not ordinarily be housed in the same room when inadvertent exposure to test, control, or reference substances or test system mixup could affect the outcome of either study. If such mixed housing is necessary, adequate differentiation by space and identification shall be made.

(1) Plants, invertebrate animals, aquatic vertebrate animals, and organisms that may be used in multispecies tests need not be housed in separate rooms, provided that they are adequately segregated to avoid mixup and cross contamination.

(2) [Reserved]

(f) Cages, racks, pens, enclosures, aquaria, holding tanks, ponds, growth chambers, and other holding, rearing, and breeding areas, and accessory equipment, shall be cleaned and sanitized at appropriate intervals.

(g) Feed, soil, and water used for the test systems shall be analyzed periodically to ensure that contaminants known to be capable of interfering with the study and reasonably expected to be present in such feed, soil, or water are not present at levels above those specified in the protocol. Documentation of such analyses shall be maintained as raw data.

(h) Bedding used in animal cages or pens shall not interfere with the purpose or conduct of the study and shall be changed as often as necessary to keep the animals dry and clean.

(i) If any pest control materials are used, the use shall be documented. Cleaning and pest control materials that interfere with the study shall not be used.

(j) All plant and animal test systems shall be acclimatized to the environmental conditions of the test, prior to their use in a study.

Subpart F—Test, Control, and Reference Substances

§ 792.105 Test, control, and reference substance characterization.

(a) The identity, strength, purity, and composition, or other characteristics which will appropriately define the test, control, or reference substance shall be determined for each batch and shall be documented before its use in a study. Methods of synthesis, fabrication, or derivation of the test, control,

or reference substance shall be documented by the sponsor or the testing facility, and such location of documentation shall be specified.

(b) When relevant to the conduct of the study the solubility of each test, control, or reference substance shall be determined by the testing facility or the sponsor before the experimental start date. The stability of the test, control or reference substance shall be determined before the experimental start date or concomitantly according to written standard operating procedures, which provide for periodic analysis of each batch.

(c) Each storage container for a test, control, or reference substance shall be labeled by name, chemical abstracts service number (CAS) or code number, batch number, expiration date, if any, and, where appropriate, storage conditions necessary to maintain the identity, strength, purity, and composition of the test, control, or reference substance. Storage containers shall be assigned to a particular test substance for the duration of the study.

(d) For studies of more than 4 weeks experimental duration, reserve samples from each batch of test, control, and reference substances shall be retained for the period of time provided by § 792.195.

(e) The stability of test, control, and reference substances under storage conditions at the test site shall be known for all studies.

§ 792.107 Test, control, and reference substance handling.

Procedures shall be established for a system for the handling of the test, control, and reference substances to ensure that:

(a) There is proper storage.

(b) Distribution is made in a manner designed to preclude the possibility of contamination, deterioration, or damage.

(c) Proper identification is maintained throughout the distribution process.

(d) The receipt and distribution of each batch is documented. Such documentation shall include the date and quantity of each batch distributed or returned.

§ 792.113 Mixtures of substances with carriers.

(a) For each test, control, or reference substance that is mixed with a carrier, tests by appropriate analytical methods shall be conducted:

(1) To determine the uniformity of the mixture and to determine, periodically, the concentration of the test, control, or reference substance in the mixture.

(2) When relevant to the conduct of the experiment, to determine the solubility of each test, control, or reference substance in the mixture by the testing facility or the sponsor before the experimental start date.

(3) To determine the stability of the test, control or reference substance in the mixture before the experimental start date or concomitantly according to written standard operating procedures, which provide for periodic analysis of each batch.

(b) Where any of the components of the test, control, or reference substance carrier mixture has an expiration date, that date shall be clearly shown on the container. If more than one component has an expiration date, the earliest date shall be shown.

(c) If a vehicle is used to facilitate the mixing of a test substance with a carrier, assurance shall be provided that the vehicle does not interfere with the integrity of the test.

Subpart G—Protocol for and Conduct of A Study

§ 792.120 Protocol.

(a) Each study shall have an approved written protocol that clearly indicates the objectives and all methods for the conduct of the study. The protocol shall contain but shall not necessarily be limited to the following information:

(1) A descriptive title and statement of the purpose of the study.

(2) Identification of the test, control, and reference substance by name, chemical abstracts service (CAS) number or code number.

(3) The name and address of the sponsor and the name and address of the testing facility at which the study is being conducted.

(4) The proposed experimental start and termination dates.

(5) Justification for selection of the test system.

(6) Where applicable, the number, body weight, sex, source of supply, species, strain, substrain, and age of the test system.

(7) The procedure for identification of the test system.

(8) A description of the experimental design, including methods for the control of bias.

(9) Where applicable, a description and/or identification of the diet used in the study as well as solvents, emulsifiers and/or other materials used to solubilize or suspend the test, control, or reference substances before mixing with the carrier. The description shall include specifications for acceptable levels of contaminants that are reasonably expected to be present in the dietary materials and are known to be capable of interfering with the purpose or conduct of the study if present at levels greater than established by the specifications.

(10) The route of administration and the reason for its choice.

(11) Each dosage level, expressed in milligrams per kilogram of body or test system weight or other appropriate units, of the test, control, or reference substance to be administered and the method and frequency of administration.

(12) The type and frequency of tests, analyses, and measurements to be made.

(13) The records to be maintained.

(14) The date of approval of the protocol by the sponsor and the dated signature of the study director.

(15) A statement of the proposed statistical method.

(b) All changes in or revisions of an approved protocol and the reasons therefor shall be documented, signed by the study director, dated, and maintained with the protocol.

§ 792.130 Conduct of a study.

(a) The study shall be conducted in accordance with the protocol.

(b) The test systems shall be monitored in conformity with the protocol.

(c) Specimens shall be identified by test system, study, nature, and date of collection. This information shall be located on the specimen container or shall accompany the specimen in a manner that precludes error in the recording and storage of data.

(d) In animal studies where histopathology is required, records of gross findings for a specimen from postmortem observations shall be available to a pathologist when examining that specimen histopathologically.

(e) All data generated during the conduct of a study, except those that are generated by automated data collection systems, shall be recorded directly, promptly, and legibly in ink. All data entries shall be dated on the day of entry and signed or initialed by the person entering the data. Any change in entries shall be made so as not to obscure the original entry, shall indicate the reason for such change, and shall be dated and signed or identified at the time of the change. In automated data collection systems, the individual responsible for direct data input shall be identified at the time of data input. Any change in automated data entries shall be made so as not to obscure the original entry, shall indicate the reason for change, shall be dated, and the responsible individual shall be identified.

§ 792.135 Physical and chemical characterization studies.

(a) All provisions of the GLPs shall apply to physical and chemical characterization studies designed to determine stability, solubility, octanol water partition coefficient, volatility, and persistence (such as biodegradation, photodegradation, and chemical degradation studies).

(b) The following GLP standards shall not apply to studies designed to determine physical and chemical characteristics of a test, control, or reference substance:

Section 792.31 (c), (d), and (g)
Section 792.35 (b) and (c)
Section 792.43
Section 792.45
Section 792.47
Section 792.49
Section 792.81(b) (1), (2), (6) through (9), and (12)
Section 792.90
Section 792.105 (a) through (d)

Section 792.113
Section 792.120(a) (5) through (12), and (15)
Section 792.185(a) (5) through (8), (10), (12), and (14)
Section 792.195 (c) and (d)

Subparts H–I [Reserved]

Subpart J—Records and Reports

§ 792.185 Reporting of study results.

(a) A final report shall be prepared for each study and shall include, but not necessarily be limited to, the following:

(1) Name and address of the facility performing the study and the dates on which the study was initiated and was completed, terminated, or discontinued.

(2) Objectives and procedures stated in the approved protocol, including any changes in the original protocol.

(3) Statistical methods employed for analyzing the data.

(4) The test, control, and reference substances identified by name, chemical abstracts service (CAS) number or code number, strength, purity, and composition, or other appropriate characteristics.

(5) Stability, and when relevant to the conduct of the study, the solubility of the test, control, and reference substances under the conditions of administration.

(6) A description of the methods used.

(7) A description of the test system used. Where applicable, the final report shall include the number of animals or other test organisms used, sex, body weight range, source of supply, species, strain and substrain, age, and procedure used for identification.

(8) A description of the dosage, dosage regimen, route of administration, and duration.

(9) A description of all circumstances that may have affected the quality or integrity of the data.

(10) The name of the study director, the names of other scientists or professionals and the names of all supervisory personnel, involved in the study.

(11) A description of the transformations, calculations, or operations performed on the data, a summary and analysis of the data, and a statement of the conclusions drawn from the analysis.

(12) The signed and dated reports of each of the individual scientists or other professionals involved in the study, including each person who, at the request or direction of the testing facility or sponsor, conducted an analysis or evaluation of data or specimens from the study after data generation was completed.

(13) The locations where all specimens, raw data, and the final report are to be stored.

(14) The statement prepared and signed by the quality assurance unit as described in § 792.35(b)(7).

(b) The final report shall be signed and dated by the study director.

(c) Corrections or additions to a final report shall be in the form of an amendment by the study director. The amendment shall clearly identify that part of the final report that is being added to or corrected and the reasons for the correction or addition, and shall be signed and dated by the person responsible. Modification of a final report to comply with the submission requirements of EPA does not constitute a correction, addition, or amendment to a final report.

(d) A copy of the final report and of any amendment to it shall be maintained by the sponsor and the test facility.

§ 792.190 Storage and retrieval of records and data.

(a) All raw data, documentation, records, protocols, specimens, and final reports generated as a result of a study shall be retained. Specimens obtained from mutagenicity tests, specimens of soil, water, and plants, and wet specimens of blood, urine, feces, and biological fluids, do not need to be retained after quality assurance verification. Correspondence and other documents relating to interpretation and evaluation of data, other than those documents contained in the final report, also shall be retained.

(b) There shall be archives for orderly storage and expedient retrieval of all raw data, documentation, protocols, specimens, and interim and final reports. Conditions of storage shall minimize deterioration of the documents or

specimens in accordance with the requirements for the time period of their retention and the nature of the documents of specimens. A testing facility may contract with commercial archives to provide a repository for all material to be retained. Raw data and specimens may be retained elsewhere provided that the archives have specific reference to those other locations.

(c) An individual shall be identified as responsible for the archives.

(d) Only authorized personnel shall enter the archives.

(e) Material retained or referred to in the archives shall be indexed to permit expedient retrieval.

§ 792.195 Retention of records.

(a) Record retention requirements set forth in this section do not supersede the record retention requirements of any other regulations in this subchapter.

(b)(1) Except as provided in paragraph (c) of this section, documentation records, raw data, and specimens pertaining to a study and required to be retained by this part shall be retained in the archive(s) for a period of at least ten years following the effective date of the applicable final test rule.

(2) In the case of negotiated testing agreements, each agreement will contain a provision that, except as provided in paragraph (c) of this section, documentation records, raw data, and specimens pertaining to a study and required to be retained by this part shall be retained in the archive(s) for a period of at least ten years following the publication date of the acceptance of a negotiated test agreement.

(3) In the case of testing submitted under section 5, except for those items listed in paragraph (c) of this section, documentation records, raw data, and specimens pertaining to a study and required to be retained by this part shall be retained in the archive(s) for a period of at least five years following the date on which the results of the study are submitted to the agency.

(c) Wet specimens, samples of test, control, or reference substances, and specially prepared material which are relatively fragile and differ markedly in stability and quality during storage, shall be retained only as long as the quality of the preparation affords evaluation. Specimens obtained from mutagenicity tests, specimens of soil, water, and plants, and wet specimens of blood, urine, feces, biological fluids, do not need to be retained after quality assurance verification. In no case shall retention be required for longer periods than those set forth in paragraph (b) of this section.

(d) The master schedule sheet, copies of protocols, and records of quality assurance inspections, as required by § 792.35(c) shall be maintained by the quality assurance unit as an easily accessible system of records for the period of time specified in paragraph (b) of this section.

(e) Summaries of training and experience and job descriptions required to be maintained by § 792.29(b) may be retained along with all other testing facility employment records for the length of time specified in paragraph (b) of this section.

(f) Records and reports of the maintenance and calibration and inspection of equipment, as required by § 792.63 (b) and (c), shall be retained for the length of time specified in paragraph (b) of this section.

(g) If a facility conducting testing or an archive contracting facility goes out of business, all raw data, documentation, and other material specified in this section shall be transferred to the archives of the sponsor of the study. The EPA shall be notified in writing of such a transfer.

(h) Specimens, samples, or other nondocumentary materials need not be retained after EPA has notified in writing the sponsor or testing facility holding the materials that retention is no longer required by EPA. Such notification normally will be furnished upon request after EPA or FDA has completed an audit of the particular study to which the materials relate and EPA has concluded that the study was conducted in accordance with this part.

(i) Records required by this part may be retained either as original records or as true copies such as photocopies, microfilm, microfiche, or other accurate reproductions of the original records.

PART 795—PROVISIONAL TEST GUIDELINES

Subpart A [Reserved]

Subpart B—Provisional Chemical Fate Guidelines

Sec.
795.70 Indirect photolysis screening test: Sunlight photolysis in waters containing dissolved humic substances.

Subpart C—Provisional Environmental Effects Guidelines

795.120 Gammarid acute toxicity test.

Subpart D—Provisional Health Effects Guidelines

795.225 Dermal pharmacokinetics of DGBE and DGBA.
795.228 Oral/dermal pharmacokinetics.
795.231 Pharmacokinetics of isopropanal.
795.232 Inhalation and dermal pharmacokinetics of commercial hexane.
795.250 Developmental neurotoxicity screen.

AUTHORITY: 15 U.S.C. 2603.

Subpart A [Reserved]

Subpart B—Provisional Chemical Fate Guidelines

§ 795.70 Indirect photolysis screening test: Sunlight photolysis in waters containing dissolved humic substances.

(a) *Introduction.* (1) Chemicals dissolved in natural waters are subject to two types of photoreaction. In the first case, the chemical of interest absorbs sunlight directly and is transformed to products when unstable excited states of the molecule decompose. In the second case, reaction of dissolved chemical is the result of chemical or electronic excitation transfer from light-absorbing humic species in the natural water. In contrast to direct photolysis, this photoreaction is governed initially by the spectroscopic properties of the natural water.

(2) In general, both indirect and direct processes can proceed simultaneously. Under favorable conditions the measurement of a photoreaction rate constant in sunlight (K_{pE}) in a natural water body will yield a net value that is the sum of two first-order reaction rate constants for the direct (k_{DE}) and indirect (k_{IE}) pathways which can be expressed by the relationship

Equation 1

$$k_{pE}=k_{DE}+k_{IE}.$$

This relationship is obtained when the reaction volume is optically thin so that a negligible fraction of the incident light is absorbed and is sufficiently dilute in test chemical; thus the direct and indirect photoreaction processes become first-order.

(3) In pure water only, direct photoreaction is possible, although hydrolysis, biotransformation, sorption, and volatilization also can decrease the concentraton of a test chemical. By measuring k_{pE} in a natural water and k_{DE} in pure water, k_{IE} can be calculated.

(4) Two protocols have been written that measure k_{DE} in sunlight or predict k_{DE} in sunlight from laboratory measurements with monochromatic light (USEPA (1984) under paragraph (f)(14) and (15) of this section; Mill et al. (1981) under paragraph (f)(9) of this section; Mill et al. (1982) under paragraph (f)(10) of this section; Mill et al. (1983) under paragraphs (f)(11) of this section). As a preface to the use of the present protocol, it is not necessary to know k_{DE}; it will be determined under conditions that definitively establish whether k_{IE} is significant with respect to k_{DE}.

(5) This protocol provides a cost effective test method for measuring k_{IE} for test chemicals in a natural water (synthetic humic water, SHW) derived from commercial humic material. It describes the preparation and standardization of SHW. To implement the method, a test chemical is exposed to sunlight in round tubes containing SHW and tubes containing pure water for defined periods of time based on a screening test.

(6) To correct for variations in solar irradiance during the reaction period, an actinometer is simultaneously insolated. From these data, an indirect photoreaction rate constant is calculated that is applicable to clear-sky, near-surface, conditions in fresh water bodies.

(7) In contrast to k_{DE}, which, once measured, can be calculated for different seasons and latitudes, k_{IE} only

applies to the season and latitude for which it is determined. This condition exists because the solar action spectrum for indirect photoreaction in humic-containing waters is not generally known and would be expected to change for different test chemicals. For this reason, k_{pE}, which contains k_{IE}, is likewise valid only for the experimental data and latitude.

(8) The value of k_{pE} represents an atypical quantity because k_{IE} will change somewhat from water body to water body as the amount and quality of dissolved aquatic humic substances change. Studies have shown, however, that for optically-matched natural waters, these differences are usually within a factor of two (Zepp et al. (1981) under paragraph (f)(17) of this section).

(9) This protocol consists of three separate phases that should be completed in the following order: In Phase 1, SHW is prepared and adjusted; in Phase 2, the test chemical is irradiated in SHW and pure water (PW) to obtain approximate sunlight photoreaction rate constants and to determine whether direct and indirect photoprocesses are important; in Phase 3, the test chemical is again irradiated in PW and SHW. To correct for photobleaching of SHW and also solar irradiance variations, tubes containing SHW and actinometer solutions are exposed simultaneously. From these data k_{pE} is calculated that is the sum of k_{IE} and k_{DE} (Equation 1) (Winterle and Mill (1985) under paragraph (f)(12) of this section).

(b) *Phase 1—Preparation and standardization of synthetic natural water*—(1) *Approach*. (i) Recent studies have demonstrated that natural waters can promote the indirect (or sensitized) photoreaction of dissolved organic chemicals. This reactivity is imparted by dissolved organic material (DOM) in the form of humic substances. These materials absorb sunlight and produce reactive intermediates that include singlet oxygen ($^1O_2$) (Zepp et al. (1977) under paragraph (f)(20) of this section, Zepp et al. (1981) under paragraph (f)(17) of this section, Zepp et al. (1981) under paragraph (f)(18) of this section, Wolff et al. (1981) under paragraph (f)(16) of this section, Haag et al. (1984) under paragraph (f)(6) of this section, Haag et al. (1984) under paragraph (f)(7) of this section); peroxy radicals (RO_2-) (Mill et al. (1981) under paragraph (f)(9) of this section; Mill et al. (1983) under paragraph (f)(8) of this section); hydroxyl radicals ($HO-$) (Mill et al. (1981) under paragraph (f)(9) of this section, Draper and Crosby (1981, 1984) under paragraphs (f)(3) and (4) of this section); superoxide anion (O_2^{--}) and hydroperoxy radicals ($HO-$). (Cooper and Zika (1983) under paragraph (f)(1) of this section, Draper and Crosby (1983) under paragraph (f)(2) of this section); and triplet excited states of the humic substances (Zepp et al. (1981) under paragraph (f)(17) of this section, Zepp et al. (1985) under paragraph (f)(21) of this section). Synthetic humic waters, prepared by extracting commercial humic or fulvic materials with water, photoreact similarly to natural waters when optically matched (Zepp et al. (1981) under paragraphs (f)(17) and (18) of this section).

(ii) The indirect photoreactivity of a chemical in a natural water will depend on its response to these reactive intermediates, and possibly others yet unknown, as well as the ability of the water to generate such species. This latter feature will vary from water-to-water in an unpredictable way, judged by the complexity of the situation.

(iii) The approach to standardizing a test for indirect photoreactivity is to use a synthetic humic water (SHW) prepared by water-extracting commercial humic material. This material is inexpensive, and available to any laboratory, in contrast to a specific natural water. The SHW can be diluted to a dissolved organic carbon (DOC) content and uv-visible absorbance typical of most surface fresh waters.

(iv) In recent studies it has been found that the reactivity of SHW mixtures depends on pH, and also the history of sunlight exposure (Mill et al. (1983) under paragraph (f)(11) of this section). The SHW solutions initially photobleach with a time-dependent rate constant. As such, an SHW test system has been designed that is buffered to maintain pH and is pre-aged in sunlight to produce, subsequently, a predictable bleaching behavior.

(v) The purpose of Phase 1 is to prepare, pre-age, and dilute SHW to a

standard mixture under defined, reproducible conditions.

(2) *Procedure.* (i) Twenty grams of Aldrich humic acid are added to a clean 2-liter Pyrex Erlenmeyer flask. The flask is filled with 2 liters of 0.1 percent NaOH solution. A stir bar is added to the flask, the flask is capped, and the solution is stirred for 1 hour at room temperature. At the end of this time the dark brown supernatant is decanted off and either filtered through coarse filter paper or centrifuged and then filtered through 0.4)m microfilter. The pH is adjusted to 7.0 with dilute H_2SO_4 and filter sterilized through a 0.2)m filter into a rigorously cleaned 2-liter Erlenmeyer flask. This mixture contains roughly 60 ppm DOC and the absorbance (in a 1 cm path length cell) is approximately 1.7 at 313 nm and 0.7 at 370 nm.

(ii) Pre-aging is accomplished by exposing the concentrated solution in the 2-liter flask to direct sunlight for 4 days in early spring or late fall; 3 days in late spring, summer, or early fall. At this time the absorbance of the solution is measured at 370 nm, and a dilution factor is calculated to decrease the absorbance to 0.50 in a 1 cm path length cell. If necessary, the pH is readjusted to 7.0. Finally, the mixture is brought to exact dilution with a precalculated volume of reagent-grade water to give a final absorbance of 0.500 in a 1-cm path length cell at 370 nm. It is tightly capped and refrigerated.

(iii) This mixture is SHW stock solution. Before use it is diluted 10-fold with 0.010 M phosphate buffer to produce a pH 7.0 mixture with an absorbance of 5.00×10^{-2} at 370 nm, and a dissolved organic carbon of about 5 ppm. Such values are characteristic of many surface fresh waters.

(3) *Rationale.* The foregoing procedure is designed to produce a standard humic-containing solution that is pH controlled, and sufficiently aged that its photobleaching first-order rate constant is not time dependent. It has been demonstrated that after 7 days of winter sunlight exposure, SHW solutions photobleached with a nearly constant rate constant (Mill et al. (1983) under paragraph (f)(11) of this section).

(c) *Phase 2—Screening test*—(1) *Introduction and purpose.* (i) Phase 2 measurements provide approximate solar photolysis rate constants and half-lives of test chemicals in PW and SHW. If the photoreaction rate in SHW is significantly larger than in PW (factor of > 2X) then the test chemical is subject to indirect photoreaction and Phase 3 is necessary. Phase 2 data are needed for more accurate Phase 3 measurements, which require parallel solar irradiation of actinometer and test chemical solutions. The actinometer composition is adjusted according to the results of Phase 2 for each chemical, to equalize as much as possible photoreaction rate constants of chemical in SHW and actinometer.

(ii) In Phase 2, sunlight photoreaction rate constants are measured in round tubes containing SHW and then mathematically corrected to a flat water surface geometry. These rate constants are not corrected to clear-sky conditions.

(2) *Procedure.* (i) Solutions of test chemicals should be prepared using sterile, air-saturated, 0.010 M, pH 7.0 phosphate buffer and reagent-grade (or purer) chemicals.[1] Reaction mixtures should be prepared with chemicals at concentrations at less than one-half their solubility in pure water and at concentrations such that, at any wavelengths above 290 nm, the absorbance in a standard quartz sample cell with a 1-cm path length is less than 0.05. If the chemicals are too insoluble in water to permit reasonable handling or analytical procedures, 1-volume percent acetonitrile may be added to the buffer as a cosolvent.

(ii) This solution should be mixed 9.00:1.00 by volume with PW or SHW stock solution to provide working solutions. In the case of SHW, it gives a ten-fold dilution of SHW stock solution. Six mL aliquots of each working solution should then be transferred to separate 12 × 100 mm quartz tubes with screw tops and tightly sealed with Mininert valves.[2] Twenty four tubes are required for each chemical solution

[1] The water should be ASTM Type IIA, or an equivalent grade.

[2] Mininert Teflon sampling vials are available from Alltech Associates, Inc., 202 Campus Dr., Arlington Heights, IL 60004.

(12 samples and 12 dark controls), to give a total of 48 tubes.

(iii) The sample tubes are mounted in a photolysis rack with the tops facing geographically north and inclined 30° from the horizontal. The rack should be placed outdoors over a black background in a location free of shadows and excessive reflection.

(iv) Reaction progress should be measured with an analytical technique that provides a precision of at least ±5 percent. High pressure liquid chromatography (HPLC) or gas chromatograph (GC) have proven to be the most general and precise analytical techniques.

(v) Sample and control solution concentrations are calculated by averaging analytical measurements for each solution. Control solutions should be analyzed at least twice at zero time and at other times to determine whether any loss of chemical in controls or samples has occurred by some adventitious process during the experiment.

(vi) Whenever possible the following procedures should be completed in clear, warm, weather so that solutions will photolyze more quickly and not freeze.

(A) Starting at noon on day zero, expose to sunlight 24 sample tubes mounted on the rack described above. Tape 24 foil-wrapped controls to the bottom of the rack.

(B) Analyze two sample tubes and two unexposed controls in PW and SHW for chemical at 24 hours. Calculate the round tube photolysis rate constants $(k_p)_{SHW}$ and $(k_p)_W$ if the percent conversions are J 20 percent but F 80 percent. The rate constants $(k_p)_{SHW}$ and $(k_p)_W$ are calculated, respectively, from Equations 2 and 3:

Equation 2

$$(k_p)_{SHW}=(1/t)Pn(C_o/C_t)_{SHW} \text{ (in } d^{-1})$$

Equation 3

$$(k_p)_W=(1/t)Pn(C_o/C_t)_W \text{ (in } d^{-1}),$$

where the subscript identifies a reaction in SHW or PW; t is the photolysis time in calendar days; C_o is the initial molar concentration; and C_t is the molar concentration in the irradiated tube at t. In this case t=1 day.

(C) If less than 20 percent conversion occurs in SHW in 1 day, repeat the procedure for SHW and PW at 2 days, 4 days, 8 days, or 16 days, or until 20 percent conversion is reached. Do not extend the experiment past 16 days. If less than 20 percent photoreaction occurs in SHW at the end of 16 days the chemical is ''photoinert''. Phase 3 is not applicable.

(D) If more than 80 percent photoreaction occurs at the end of day 1 in SHW, repeat the experiment with eight each of the remaining foil-wrapped PW and SHW controls. Divide these sets into four sample tubes each, leaving four foil-wrapped controls taped to the bottom of the rack.

(*1*) Expose tubes of chemical in SHW and PW to sunlight starting at 0900 hours and remove one tube and one control at 1, 2, 4, and 8 hours. Analyze all tubes the next day.

(*2*) Extimate $(k_p)_{SHW}$ for the first tube in which photoreaction is J 20 percent but F 80 percent. If more than 80 percent conversion occurs in the first SHW tube, report: ''The half-life is less than one hour'' and end all testing. The chemical is ''photolabile.'' Phase 3 is not applicable.

(*3*) The rate constants $(k_p)_{SHW}$ and $(k_p)_W$ are calculated from equations 2 and 3 but the time of irradiation must be adjusted to reflect the fact that day-averaged rate constants are approximately one-third of rate constants averaged over only 8 daylight hours. For 1 hour of insolation enter t=0.125 day into equation 2. For reaction times of 2, 4, and 8 hours enter 0.25, 0.50 and 1.0 days, respectively. Proceed to Phase 3 testing.

(*4*) Once $(k_p)_{SHW}$ and $(k_p)_W$ are measured, determine the ratio R from equation 4:

Equation 4

$$R=(k_p)_{SHW}/(k_p)_W.$$

The coefficient R, defined by Equation 4, is equal to $[(k_I+k_D)/k_D]$. If R is in the range 0 to 1, the photoreaction is inhibited by the synthetic humic water and Phase 3 does not apply. If R is in the range 1 to 2, the test chemical is marginally susceptable to indirect photolysis. In this case, Phase 3 studies are optional. If R is greater than 2,

Phase 3 measurements are necessary to measure k_{pE} and to evaluate k_{IE}.

(vii) Since the rate of photolysis in tubes is faster than the rate in natural water bodies, values of near-surface photolysis rate constants in natural and pure water bodies, k_{pE} and k_{DE}, respectively, can be obtained from $(k_p)_{SHW}$ and $(k_p)_W$ from Equations 5 and 6:

Equation 5

$$k_{pE}=0.45(k_p)_{SHW}$$

Equation 6

$$k_{DE}=0.45(k_p)_W.$$

The factor 0.45 is an approximate geometric correction for scattered light in tubes versus horizontal surfaces. A rough value of k_{IE}, the rate constant for indirect photolysis in natural waters or SHW, can be estimated from the difference between k_{pE} and k_{DE} using Equation 7:

Equation 7

$$k_{IE}=k_{pE}-k_{DE}.$$

(3) *Criteria for Phase 2.* (i) If no loss of chemical is found in dark control solutions compared with the analysis in tubes at zero time (within experimental error), any loss of chemical in sunlight is assumed to be due to photolysis, and the procedure provides a valid estimate of k_{pE} and k_{DE}. Any loss of chemical in the dark-control solutions may indicate the intervention of some other loss process such as hydrolysis, microbial degradation, or volatilization. In this case, more detailed experiments are needed to trace the problem and if possible eliminate or minimize the source of loss.

(ii) Rate constants determined by the Phase 2 protocol depend upon latitude, season, and weather conditions. Note that $(k_p)_{SHW}$ and k_D values apply to round tubes and k_{pE} and k_{DE} values apply to a natural water body. Because both $(k_p)_{SHW}$ and k_D are measured under the same conditions the ratio $((k_p)_{SHW}/k_D)$ is a valid measure of the susceptibility of a chemical to indirect photolysis. However, since SHW is subject to photobleaching, $(k_p)_{SHW}$ will decrease with time because the indirect rate will diminish. Therefore, R >2 is considered to be a conservative limit because $(k_p)_{SHW}$ will become systematically smaller with time.

(4) *Rationale.* The Phase 2 protocol is a simple procedure for evaluating direct and indirect sunlight photolysis rate constants of a chemical at a specific time of year and latitude. It provides a rough rate constant for the chemical in SHW that is necessary for Phase 3 testing. By comparison with the direct photoreaction rate constant, it can be seen whether the chemical is subject to indirect photoreaction and whether Phase 3 tests are necessary.

(5) *Scope and limitations.* (i) Phase 2 testing separates test chemicals into three convenient categories: ''Photolabile'', ''photoinert'', and those chemicals having sunlight half-lives in round tubes in the range of 1 hour to 50 days. Chemicals in the first two categories fall outside the practical limits of the test, and cannot be used in Phase 3. All other chemicals are suitable for Phase 3 testing.

(ii) The test procedure is simple and inexpensive, but does require that the chemical dissolve in water at sufficient concentrations to be measured by some analytical technique but not have appreciable absorbance in the range 290 to 825 nm. Phase 2 tests should be done during a clear-sky period to obtain the best results. Testing will be less accurate for chemicals with half-lives of less than 1 day because dramatic fluctuations in sunlight intensity can arise from transient weather conditions and the difficulty of assigning equivalent reaction times. Normal diurnal variations also affect the photolysis rate constant. Phase 3 tests should be started as soon as possible after the Phase 2 tests to ensure that the $(k_p)_{SHW}$ estimate remains valid.

(6) *Illustrative Example.* (i) Chemical A was dissolved in 0.010 M pH 7.0 buffer. The solution was filtered through a 0.2)m filter, air saturated, and analyzed. It contained 1.7×10^{-5} M A, five-fold less than its water solubility of 8.5×10^{-5} M at 25 °C. A uv spectrum (1-cm path length) versus buffer blank showed no absorbance greater than 0.05 in the wavelength interval 290 to 825 nm, a condition required for the Phase 2 protocol. The 180 mL mixture was diluted

by the addition of 20 mL of SHW stock solution.

(ii) The SHW solution of A was photolyzed in sealed quartz tubes (12×100 mm) in the fall season starting on October 1. At the end of 1 and 2 days, respectively, the concentration of A was found to be 1.13×10^{-5} M and 0.92×10^{-5} M compared to unchanged dark controls (1.53×10^{-5} M).

(iii) The tube photolysis rate constant of chemical A was calculated from Equation 2 under paragraph (c)(2)(vi)(B) of this section. The first time point at day 1 was used because the fraction of A remaining was in the range 20 to 80 percent:

$(k_p)_{SHW}=(1/1d)Pn(1.53\times10^{-5}/1.13\times10^{-5})$
$(k_p)_{SHW}=0.30\ d^{-1}$.

(iv) From this value, k_{pE} was found to be 0.14 d^{-1} using equation 5 under paragraph (c)(2)(vii) of this section:

$k_{pE}=0.45(0.30\ d^{-1})=0.14d^{-1}$.

(v) From measurements in pure water, k_D for chemical A was found to be 0.085 d^{-1}. Because the ratio of $(k_p)_{SHW}/k_D$(=3.5) is greater than 2, Phase 3 experiments were started.

(d) *Phase 3—Indirect photoreaction with actinometer: Calculation of* k_{IE} *and* k_{pE}—(1) *Introduction and purpose.*

(i) The purpose of Phase 3 is to measure k_{Io}, the indirect photolysis rate constant in tubes, and then to calculate k_{pE} for the test chemical in a natural water. If the approximate $(k_p)_{SHW}$ determined in Phase 2 is not significantly greater than k_D measured for the experiment date of Phase 2, then Phase 3 is unnecessary because the test chemical is not subject to indirect photoreaction.

(ii) In the case $(k_p)_{SHW}$ is significantly larger than k_D, Phase 3 is necessary. The rate constant $(k_p)_{SHW}$ is used to choose an actinometer composition that matches the actinometer rate to the test chemical rate. Test chemical solutions in SHW and in pure water buffer are then irradiated in sunlight in parallel with actinometer solutions, all in tubes.

(iii) The actinometer used is the *p*-nitroacetophenone-pyridine (PNAP/PYR) system developed by Dulin and Mill (1982) under paragraph (f)(5) of this section and is used in two EPA test guidelines (USEPA (1984) under paragraphs (f) (14) and (15) of this section). By varying the pyridine concentration, the PNAP photolysis half-life can be adjusted over a range of several hours to several weeks. The starting PNAP concentration is held constant.

(iv) SHW is subject to photobleaching that decreases its ability to promote indirect photolysis based on its ability to absorb sunlight. This effect will be significant when the test period exceeds a few days. To correct for photobleaching, tubes containing SHW are irradiated in action to the other tubes above.

(v) At any time, the loss of test chemical is given by Equation 8 assuming actinometric correction to constant light flux:

Equation 8

$-(d[C]/dt)=k_I[C]+k_D[C]$.

(vi) The indirect photolysis rate constant, k_I, is actually time dependent because SHW photobleaches; the rate constant k_I, after pre-aging, obeys the formula:

Equation 9

$k_I=k_{Io}\exp(-kt)$,

in which k_{Io} is the initial indirect photoreaction rate constant and k is the SHW photobleaching rate constant. After substituting equation 9 for k_I in Equation 8 under paragraph (d)(1)(v) of this section, and rearranging, one obtains

$-(d[C]/[C]=k_{Io}[\exp(-kt)]dt+k_D\ dt$.

This expression is integrated to give Equation 10:

Equation 10

$Pn(C_o/C)_{SHW}=(k_{Io}/k)[1-\exp(-kt)]+k_D\ t$.

The term (k_{Io}/k) can now be evaluated. Since in pure water, $Pn(C_o/C)_W=k_D\ t$, then subtracting this equation from Equation 10 gives

Equation 11

$Pn(C_o/C)_{SHW}-Pn(c_o/C)_W=(k_{Io}/k)[1-\exp(-kt)]$.

The photobleaching fraction, [1-exp(-kt)], is equivalent to the expression [1-

$(A_{370}/A°_{370})]$, where $A°_{370}$ and A_{370} are the absorbances at 370 nm, and are proportional to humic sensitizer content at times zero and t. Therefore, (k_{Io}/k) is derived from the slope of a linear regression using $[Pn(C_o/C)_{SHW}-Pn(C_o/C)_W]$ as the dependent variable and $[1-(A_{370}/A°_{370})_{SHW}]$ as the independent variable.

(vii) To evaluate k_{Io}, the parameter k has to be evaluated under standard sunlight conditions. Therefore, the photolysis rate constant for the PNAP/PYR actinometer (k_A) is used to evaluate k by linear regression on Equation 12:

Equation 12

$$Pn(A°_{370}/A_{370})=(k/k_A)Pn(C_o/C)_{PNAP},$$

where the slope is (k/k_A) and the value of k_A is calculated from the concentration of pyridine and the absorption of light by PNAP: $k_A=2.2(0.0169)[PYR]k_a$. Values of k_a are listed in the following Table 1.

TABLE 1—DAY AVERAGED RATE CONSTANT (k_a) [1] FOR SUNLIGHT ABSORPTION BY PNAP AS A FUNCTION OF SEASON AND DECADIC LATITUDE [2]

Latitude	Season			
	Spring	Summer	Fall	Winter
20°N	515	551	409	327
30°N	483	551	333	232
40°N	431	532	245	139
50°N	362	496	154	64

[1] k_a=@ e_{ga} L_g in the units of day $^{-1}$, (Mill et al. (1982) under paragraph (f)(10) of this section).

[2] For use in Equation 15 under paragraph (d)(2)(i) of this section.

The value of k_{Io} is then given by Equation 13:

Equation 13

$$k_{Io}=(k_{Io}/k)(k/k_A)k_A.$$

(viii) To obtain k_D, determine the ratio (k_D/k_A) from a linear regression of $Pn(C_o/C)_W$ versus $Pn(C_o/C)_{PNAP}$ according to Equation 13a:

Equation 13a

$$Pn(C_o/C)_W=(k_D/k_A)Pn(C_o/C)_{PNAP}.$$

The slope is (k_D/k_A), and k_D is obtained by multiplication of this slope with the known value of k_A: i.e., $k_D=(k_D/k_A)k_A$.

(ix) Then, $(k_p)_{SHW}$ values in SHW are determined by summing k_D and K_{Io} as follows:

Equation 14

$$(k_p)_{SHW}=k_{Io}+k_D.$$

(x) Finally, k_{pE} is calculated from the precise relationship, Equation 5a:

Equation 5a

$$k_{pE}=0.455(k_p)_{SHW}.$$

(2) *Procedure.* (i) Using the test chemical photoreaction rate constant in round tubes, $(k_p)_{SHW}$, determined in Phase 2 under paragraph (c) of this section, and the absorption rate constant, $k\alpha$ found in Table 1, under paragraph (d)(1)(vii) of this section, calculate the molar pyridine concentration required by the PNAP/PYR actinometer using Equation 15:

Equation 15

$$[PYR]/M=26.9[(k_p)_{SHW}/k_a].$$

This pyridine concentration makes the actinometer rate constant match the test chemical rate constant.

(A) The variable k_a (= @ e_{ga} L_g) is equal to the day-averaged rate constant for sunlight absorption by PNAP (USEPA (1984) under paragraph (f)(14) of this section; Mill et al. (1982) under paragraph (f)(10) of this section, Zepp and Cline (1977) under paragraph (f)(19) of this section) which changes with season and latitude.

(B) The variable k_a is selected from Table 1 under paragraph (d)(1)(vii) of this section for the season nearest the mid-experiment date of Phase 2 studies and the decadic latitude nearest the experimental site.

(ii) Once [PYR] is determined, an actinometer solution is prepared by adding 1.00 mL of 1.0×10^{-2} M (0.165 gms/100 mL) PNAP stock solution (in CH_3 CN solvent) and the required volume, V, of PYR to a 1 liter volumetric flask. The flask is then filled with distilled water to give 1 liter of solution. The volume V can be calculated from Equation 16:

Equation 16

$$V/mL=[PYR]/0.0124.$$

The PNAP/PYR solutions should be wrapped with aluminum foil and kept out of bright light after preparation.

(iii) The following solutions should be prepared and individually added in 6.00 mL aliquots to 12/100 mm quartz sample tubes; 8 tubes should be filled with each solution:

(A) PNAP/PYR actinometer solution.

(B) Test chemical in pH 7.0, 0.010 M phosphate buffer.

(C) Test chemcial in pH 7.0, 0.010 M phosphate buffer/SHW.

(D) pH 7.0, 0.010 M phosphate buffer/SHW. Four tubes of each set are wrapped in foil and used as controls.

(iv) The tubes are placed in the photolysis rack (Phase 2, Procedure) at 0900 hours on day zero, with the controls taped to the bottom of the rack. One tube of each composition is removed, along with their respective controls, according to a schedule found in Table 2, which categorizes sampling times on the basis of $(k_p)_{SHW}$ determined in Phase 1.

TABLE 2—CATEGORY AND SAMPLING PROCEDURE FOR TEST AND ACTINOMETRY SOLUTIONS

Category	k_p $(d^{-1})_{SHW}$	Sampling procedure
A	5.5 J K_p J 0.69	Sample at 0, 1, 2, 4, and 8h.
B	0.69> k_p J 0.017	Sample at 0, 1, 2, 4, and 8d.
C	0.17> k_p J 0.043	Sample at 0, 4, 8, 16, and 32d.

(v) The tubes containing PNAP, test chemical, and their controls are analyzed for residual concentrations soon after the end of the experiment. PNAP is conveniently analyzed by HPLC, using a 30 cm C_{18} reverse phase column and a uv detector set at 280 nm. The mobile phase is 2 percent acetic acid, 50 percent acetonitrile and 48 percent water (2 mL/min flow rate). Tubes containing only SHW (solution D) should be analyzed by absorption spectroscopy at 370 nm after storage at 4 °C in the dark. The absorbance range to be measured is 0.05 to 0.01 AU (1 cm).

(vi) If controls are well-behaved and show no significant loss of chemical or absorbance change, then k_I can be calculated. In tabular form (see Table 4 under paragraph (d)(6)(iii)(A) of this section) arrange the quantities $Pn(C_o/C_t)_{SHW}$, $Pn(C_o/C_t)_{SHW}$, $[1-(A_{370}/A^o_{370})]$, $Pn(A^o_{370}/A_{370})$, and $Pn(C_o/C)_{PNAP}$ in order of increasing time. According to Equation 11 under paragraph (d)(1)(vi) of this section in the form of Equation 17,

Equation 17

$$Pn(C_o/C)_{SHW} - Pn(C_o/C)_W = (k_{Io}/k)[1-(A_{370}/A^o_{370})],$$

plot the quantities $[Pn(C_o/C_t)_{SHW} - Pn(C_o/C_t)_W]$ versus the independent variable $[1-(A_{370}/A^o_{370})]$. Obtain the slope (S1) by least square linear regression. Under the assumptions of the protocol, $S1=(k_{Io}/k)$.

(vii) According to Equation 12 under paragraph (d)(1)(vii) of this section, plot the quantities $Pn(A^o_{370}/A_{370})$ versus the independent variable $Pn(C_o/C_t)_{PNAP}$. Obtain the slope (S2) by least squares linear regression on Equation 12 under paragraph (d)(1)(vii) of this section. Under the assumptions of the protocol, $S2=(k/k_A)$.

(viii) Then, using Equation 13a under paragraph (d)(1)(vii) of this section, determine the slope (S3) by least squares linear regression. Under the assumptions of the protocol, S3 is equal to (k_D/k_A).

(ix) From Equation 18

Equation 18

$$k_A=0.0372[PYR]k_a,$$

calculate k_A using k_a values found in Table 1 under paragraph (d)(1)(vii) of this section. The value of k_a chosen must correspond to the date closest to the mid-experiment date and latitude closest to that of the experimental site.

(x) The indirect photoreaction rate constant, k_{Io}, is determined using Equation 19,

Equation 19

$$k_{Io}=(S1)(k_A)(S2),$$

by incorporating the quantities k_A, S1, and S2 determined as described in paragraphs (d)(2) (ix), (vi), and (vii) of this section, respectively.

(xi) The rate constant k_D is calculated from Equation 20,

Equation 20

$$k_D=(S3)(k_A),$$

using the quantities S3 and k_A determined as described above.

(xii) Then, $(k_p)_{SHW}$ is obtained by summing k_D and k_{Io}, as described by Equation 14 in paragraph (d)(1)(ix) of this section:

Equation 14

$$(k_p)_{SHW}=k_{Io}+k_D.$$

(xiii) Finally, k_{pE} is obtained by multiplying $(k_p)_{SNW}$ by the factor 0.455, as described by Equation 5a in paragraph (d)(1)(x) of this section:

Equation 5a

$$k_{pE}=0.455\ (k_p)_{SHW}$$

As determined, k_{pE} is the net environmental photoreaction rate constant. It applies to clear sky conditions and is valid for predicting surface photoreaction rates in an average humic containing freshwater body. It is strictly valid only for the experimental latitude and season.

(3) *Criteria for Phase 3.* As in Phase 2, Phase 3 tests are assumed valid if the dark controls are well behaved and show no significant loss of chemical. In such a case, loss of test chemical in irradiated samples is due to photoreaction.

(4) *Rationale.* Simultaneous irradiation of a test chemical and actinometer provide a means of evaluating sunlight intensities during the reaction period. Parallel irradiation of SHW solutions allows evaluation of the extent of photobleaching and loss of sensitizing ability of the natural water.

(5) *Scope and limitations of Phase 3 protocol.* Test chemicals that are classified as having half-lives in SHW in the range of 1 hour to 50 days in Phase 2 listing are suitable for use in Phase 3 testing. Such chemicals have photoreaction half-lives in a range accommodated by the PNAP/PYR actinometry in sunlight and also accommodate the persistence of SHW in sunlight.

(6) *Illustrative example.* (i) From Phase 2 testing, under paragraph (c)(6)(iii) of this section, chemical A was found to have a photolysis rate constant, $(k_p)_{SHW}'$ of 0.30 d^{-1} in fall in round tubes at latitude 33° N. Using Table 1 under paragraph (d)(1)(vii) of this section for 30° N, the nearest decadic latitude, a fall value of k_a equal to 333 d^{-1} is found for PNAP. Substitution of $(k_p)_{SHW}$ and k_a into Equation 15 under paragraph (d)(2)(i) of this section gives [PYR] = 0.0242 M. This is the concentration of pyridine that gives an actinometer rate constant of 0.30 d^{-1} in round tubes in fall at this latitude.

(ii) The actinometer solution was made up by adding a volume of pyridine (1.95 mL) calculated from equation 16 under paragraph (d)(2)(ii) of this section to a 1 liter volumetric flask containing 1.00 mL of 1.00×10^{-2} M PNAP in acetonitrile. The flask was filled to the mark with distilled water to give final concentrations of [PYR]=0.0242 M and [PNAP]=1.00×10^{-5} M. Ten tubes of each of the following solutions were placed in the photolysis rack at 1,200 hours on day zero:

(A) Chemical A (1.53×10^{-5} M) in standard SHW (0.010 M, pH 7 phosphate buffer).

(B) Chemical A (1.53×10^{-5}), in 0.010 M, pH 7 phosphate buffer.

(C) SHW standard solution diluted with water 0.90 to 1.00 to match solution A.

(D) PNAP/PYR actinometer solution. Ten additional foil-wrapped controls of each mixture were taped to the bottom of the rack.

(iii) The test chemical had been placed in category B, Table 2 under the paragraph (d)(2)(iv) of this section, on the basis of its Phase 2 rate constant under paragraph (c) of this section. Accordingly, two tubes of each irradiated solution and two tubes of each blank solution were removed at 0, 1, 2, 4, and 8 days at 1,200 hours. The averaged analytical results obtained at the end of the experiment are shown in the following Table 3.

TABLE 3—CHEMICAL ANALYTICAL RESULTS FOR ILLUSTRATIVE EXAMPLE, PHASE 3

Day	$10^5[C]^{SHW}$, M	$10^5[C]^{W}$, M	A^{SHW}**370**	10^5 [PNAP], M
0	1.53	1.53	0.0500	1.00
1	1.03	1.40	0.0470	0.810

TABLE 3—CHEMICAL ANALYTICAL RESULTS FOR ILLUSTRATIVE EXAMPLE, PHASE 3—Continued

Day	$10^5[C]^{SHW}$, M	$10^5[C]^{W}$, M	$A^{SHW}370$	10^5 [PNAP], M
2	0.760	1.30	0.0440	0.690
4	0.300	1.01	0.0370	0.380
8	0.130	0.800	0.0320	0.220

Data for solutions A through D are given in column 2 through 5, respectively. No significant chemical loss was found in the dark controls.

(A) From these items the functions $Pn(C_o/C)_{SNW}$′ $Pn(C_o/C)_W$′ $[1—(A_{370}/A^o_{370})_{SNW}]$, $Pn(A^o_{370}/A_{370})$, and $Pn(C_o/C)_{PNAP}$ were calculated, as shown in the following Table 4 which was derived from Table 3 under paragraph (d)(6)(iii) of this section:

TABLE 4—PHOTOREACTION FUNCTION FOR ILLUSTRATIVE EXAMPLES, PHASE 3, DERIVED FROM TABLE 3

Day	$Pn(C_o/C)_{SHW}$	$Pn(C_o/C)_W$	$1–(A_{370}/A^o_{370})$	$Pn(A^o370/A_{370})$	$Pn(C_o/C)_{PNAP}$
0	0	0	0	0	0
1	0.396	0.0888	0.0600	0.0618	0.211
2	0.700	0.163	0.120	0.128	0.371
4	1.629	0.415	0.260	0.301	0.968
8	2.465	0.648	0.360	0.446	1.514

(B) Slope $S1=(k_{Io}/k)$ was calculated according to Equation 17 under paragraph (d)(2)(vi) of this section and was found to be 4.96 by a least squares regression with a correlation coefficient equal to 0.9980. The following Figure 1 shows a plot of Equation 17 under paragraph (d)(2)(vi) of this section and its best-fit line.

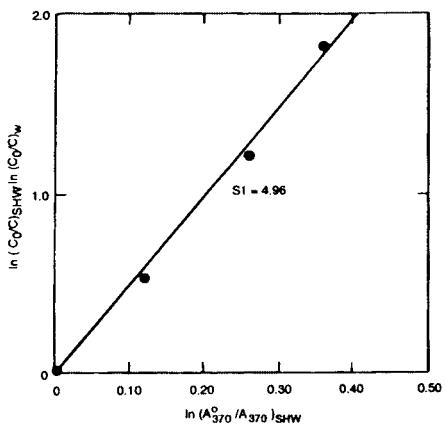

FIGURE 1—GRAPHIC DETERMINATION OF $S1=(K_{Io}/k)$ BASED ON EQUATION 17 UNDER PARAGRAPH (D)(2)(VI) OF THIS SECTION.

(C) Slope $S2=(k/k_a)$ was also derived from Table 4 under paragraph (d)(6)(iii)(A) of this section by a fit of $Pn(A^o_{370}/A_{370})_{SHW}$ and $Pn(C_o/C)_{PNAP}$ to Equation 12 under paragraph (d)(l)(vii) of this section. This plot is displayed in the following Figure 2; the slope S2 was found to be 0.295 and the correlation coefficient was equal to 0.9986.

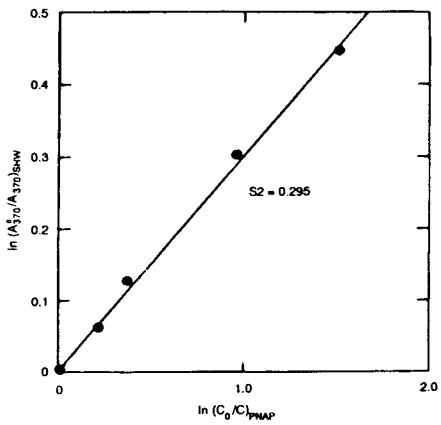

FIGURE 2—GRAPHIC DETERMINATION OF S2=(K/K_A) BASED ON EQUATION 12 UNDER PARAGRAPH (D)(1)(VII) OF THIS SECTION.

(D) Using the data in columns 3 and 6 in Table 4 under paragraph (d)(6)(iii)(A) of this section, slope S3 was calculated by regression from Equation 13a under paragraph (d)(1)(viii) of this section and was found to be 0.428 with correlation coefficient euqal to 0.99997.

(E) Using Equation 18 under paragraph (d)(2)(ix) of this section, k_A was found to be $=0.300\,d^{-1}$.

(F) The values of S1, S2, and k_A were then combined in Equation 19 under paragraph (d)(2)(x) of this section to give k_{Io} as follows:

Equation 19

$$k_{Io}=(4.96)(0.300)(0.295)=0.439\,d^{-1}.$$

(G) The rate constant k_D was calculated from the product of S3 and k_A as expressed in Equation 20 under paragraph (d)(2)(xi) of this section as follows:

Equation 20

$$k_D=(0.428)(0.300)=0.128d^{-1}.$$

(H) The sum of k_D and k_{Io} was multiplied by 0.455 to obtain k_{pE} as follows:

Equation 21

$$k_{pE}=(0.455)(0.439+0.128)d^{-1}=0.258\,d^{-1}.$$

(I) Since k_{pE} is a first-order rate constant, the half-life, $t_{1/2E}$, is given by Equation 22:

Equation 22

$$t_{1/2E}=0.693/k_{pE}.$$

Substituting the value of k_{pE} from Equation 21 under paragraph (d)(6)(iii)(H) of this section in Equation 22 yielded

Equation 23

$$t_{1/2E}=0.693/0.258d^{-1}=2.7\,d.$$

(e) *Data and reporting*—(1) *Test conditions*—(i) *Specific analytical and recovery procedures.* (A) Provide a detailed description or reference for the analytical procedures used, including the calibration data and precision.

(B) If extraction methods were used to separate the solute from the aqueous solution, provide a description of the extraction method as well as the recovery data.

(ii) *Other test conditions.* (A) Report the site and latitude where the photolysis experiments were carried out.

(B) Report the dates of photolysis, weather conditions, times of exposure, and the duration of exposure.

(C) If acetonitrile was used to solubilize the test chemical, report the volume percent.

(D) If a significant loss of test chemical occurred in the control solutions for pure water and SHW, indicate the causes and how they were eliminated or minimized.

(2) *Test data report*—(i) Phase 2 Screening Test under paragraph (c) of this section. (A) Report the initial molar concentration of test chemical, C_o, in pure water and SHW for each replicate and the mean value.

(B) Report the molar concentration of test chemical, C_t, in pure water and SHW for each replicate and the mean value for each time point t.

(C) Report the molar concentration of test chemical for each replicate control sample and the mean value for each time point.

(D) Report the values of $(k_p)_{SHW}$ and $(k_p)_W$ for the time point t in which the fraction of test chemical photoreacted is in the range 20 to 80 percent.

(E) If small losses of test chemical were observed in SHW and pure water, report a first-order rate constant loss, $(k_p)_{loss}$. Calculate and report $(k_p)_{obs}$ for SHW and/or pure water. Calculate and report the corrected first-order rate

constant for SHW and/or pure water using the relationship expressed in Equation 24:

Equation 24

$k_p=(k_p)_{obs}-(k_p)_{loss}$.

(F) Report the value of R calculated from Equation 4 under paragraph (c)(2)(vi)(D)(*4*) of this section.

(G) Report the values of k_{pE} and k_{DE} obtained from Equations 5 and 6, respectively under paragraph (c)(2)(vii) of this section; report the corresponding half-life calculated from Equation 22 under paragraph (d)(6)(iii)(I) of this section.

(ii) Phase 3—Indirect photoreaction with actinometer. (A) Report the initial molar concentration of test chemical, C_o, in pure water and in SHW for each replicate and the mean value.

(B) Report the initial absorbance A^o_{370} of the SNW solution.

(C) Report the initial molar concentration of PNAP of each replicate and the mean value in the actinometer. Report the concentration of pyridine used in the actinometer which was obtained from Equation 15 under paragraph (d)(2)(i) of this section.

(D) Report the time and date the photolysis experiments were started, the time and date the experiments were completed, and the elapsed photolysis time in days.

(E) For each time point t, report the separate values of the absorbance of the SHW solution, and the mean values.

(F) For each time point for the controls, report the separate values of the molar concentrations of test chemical in pure water and SHW, and the absorbance of the SHW solution, and the mean values.

(G) Tabulate and report the following data: t, $[C]^{SHW}$, $[C]^{W}$, A^{SNW}_{370}, [PNAP].

(H) From the data in (G), tabulate and report the following data: t, $Pn(C_o/C)_{SNW}$, $Pn(C_o/C)_W$, $[1-(A_{370}/A^o_{370})SNW]$, $Pn(A^o_{370}/A_{370})$, $Pn(C_o/C)_{PNAP}$.

(I) From the linear regression analysis of the appropriate data in step (H) in Equation 17 under paragraph (d)(2)(vi) of this section, report the slope S1 and the correlation coefficient.

(J) From the linear regression analysis of the appropriate data in step (H) in Equation 12 under paragraph (d)(1)(vii) of this section, report the slope S2 and the correlation coefficient.

(K) From the linear regression analysis of the appropriate data in step (H) in Equation 13a under paragraph (d)(1)(viii) of this section, report the slope S3 and the correlation coefficient.

(L) If loss of chemical was observed during photolysis in pure water and SHW, then report the data $Pn(C_o/C)_{corr}$, $Pn(C_o/C)_{obs}$, $Pn(C_o/C)_{loss}$ as described in paragraph (e)(2)(E) of this section. Repeat steps (H), (I), (J), (K) where applicable and report S1, S2, S3 and the corresponding correlation coefficients.

(M) Report the value of the actinometer rate constant obtained from Equation 18 under paragraph (d)(2)(ix) of this section.

(N) Report the value of k_{Io} obtained from Equation 19 under paragraph (d)(2)(x) of this section.

(O) Report the value of k_D obtained from Equation 20 under paragraph (d)(2)(xi) of this section.

(P) Report the value of $(k_{pE})_{SHW}$, obtained from Equation 14 under paragraph (d)(1)(ix) of this section, and the value of k_{pE} obtained from Equation 5a under paragraph (d)(1)(x) of this section.

(Q) Report the half-life, $t_{1/2E}$, obtained from Equation 22 under paragraph (d)(6)(iii)(I) of this section.

(f) *References.* For additional background information on this test guideline the following references should be consulted.

(1) Cooper W.J., Zika R.G. ''Photochemical formation of hydrogen peroxide in surface and ground waters exposed to sunlight.'' *Science,* 220:711. (1983).

(2) Draper W.M., Crosby D.G. ''The photochemical generation of hydrogen peroxide in natural waters.'' *Archives of Environmental Contamination and Toxicology,* 12:121. (1983).

(3) Draper, W.M. and Crosby D.G. ''Solar photooxidation of pesticides in dilute hydrogen peroxide.'' *Journal of Agricultural and Food Chemistry,* 32:231. (1984).

(4) Draper W.M., Crosby D.G. ''Hydrogen peroxide and hydroxyl radical: Intermediates in indirect photolysis reactions in water.'' *Journal of Agricultural and Food Chemistry,* 29:699. (1981).

(5) Dulin D., Mill T. ''Development and evaluation of sunlight actinometers.'' *Environmental Science and Technology,* 6:815. (1982).

(6) Haag H.R., Hoigne J., Gassman E., Braun A.M. ''Singlet oxygen in surface waters—Part I; Furfuryl alcohol as a trapping agent.'' *Chemosphere,* 13:631. (1984).

(7) Haag W.R., Hoigne J., Gassman E., Braun A.M. ''Singlet oxygen in surface waters—Part II: Quantum yields of its production by some natural humic materials as a function of wavelength.'' *Chemosphere,* 13:641. (1984).

(8) Mill T., Winterle J.S., Fischer A., Tse D., Mabey W.R., Drossman H., Liu A., Davenport J.E. Toxic substances process data generation and protocol development. Work assignment 12, test standard development. ''Section 3. Indirect photolysis.'' Draft final report. EPA Contract No. 68–03–2981. Environmental Research Laboratory, Office of Research and Development, EPA, Athens, GA, and Office of Pollution Prevention and Toxics, EPA, Washington, DC. (1984).

(9) Mill T., Mabey W.R., Bomberger D.C., Chou T.W., Hendry D.G., Smith J.H. ''Laboratory protocols for evaluating the fate of organic chemicals in air and water. Chapter 3. Photolysis in water. Chapter 4. Oxidation in water.'' EPA 600/3–82–022. Environmental Research Laboratory, Office of Research and Development, EPA, Athens, GA. (1981).

(10) Mill T., Mabey W.R., Winterle J.S., Davenport J.E., Barich V.P., Dulin D.E., Tse D.S., Lee G. ''Design and validation of screening and detailed methods for environmental processes. Apendix C. Lower-tier direct photolysis protocol.'' Draft final report. EPA Contract No. 68–01–6325. Office of Pollution Prevention and Toxics, EPA, Washington, DC. (1982).

(11) Mill T., Davenport J.E., Winterle J.S., Mabey W.R., Dossman H., Tse D., Liu A. Toxic substances process data generation and protocol development. Work assignment 12. ''Appendix B. Upper-tier protocol for direct photolysis in water.'' Draft final report. EPA Contract No. 68–03–2981. Environmental Research Laboratory, Office of Research and Development, EPA, Athens, GA, and Office of Pollution Prevention and Toxics, EPA, Washington, DC. (July 1983).

(12) Winterle J.S., Mill T. Toxic substances process data generation and protocol development. Work assignment 18. ''Indirect photoreaction protocol.'' Draft EPA special report. EPA Contract No. 68–03–2981. Environmental Research Laboratory, Office of Research and Development, EPA, Athens, GA and Office of Pollution Prevention and Toxics, EPA, Washington, DC. (1985).

(13) Mill T., Hendry D.G., Richardson H. ''Free radical oxidants in natural waters.'' *Science,* 207:886. (1980).

(14) U.S. Environmental Protection Agency (USEPA), Office of Pollution Prevention and Toxics (OPPT). ''Chemical fate test guidelines. Test guideline (CG, CS–6000). Photolysis in aqueous solution.'' EPA–560/6–84–003. NTIS publication PB–84–233287. (1984).

(15) USEPA, OPPT. ''Chemical fate test guidelines. Test guildeline (CG, CS–6010). Laboratory determination of the direct photolysis reaction quantum yield in aqueous solution and sunlight photolysis.'' EPA–560/6–84–003. NTIS publication PB–84–233287. (1984).

(16) Wolff C.J.M., Halmans M.T.H., Van der Heijde H.B. ''The formation of singlet oxygen in surface waters.'' *Chemosphere,* 10:59. (1981).

(17) Zepp R.G., Baughman G.L., Schlotzhauer P.F. ''Comparison of photochemical behavior of various humic substances in water: I. Sunlight induced reactions of aquatic pollutants photosensitized by humic substances.'' *Chemosphere,* 10:109. (1981).

(18) Zepp R.G., Baughman G.L., Schlozhauer P.F. ''Comparison of photochemical behavior of various humic substances in water: II. Photosensitized oxygenations.'' *Chemosphere,* 10:119. (1981).

(19) Zepp R.G., Cline D.M. ''Rates of direct photolysis in aquatic environments.'' *Environmental Science and Technology,* 11:359. (1977).

(20) Zepp, R.G., Wolfe N.L., Baughman G.L., Hollis R.C. ''Singlet oxygen in natural waters.'' *Nature,* 267:421. (1977).

(21) Zepp R.G., Schlotzhauer P.F., Merritt S.R. ''Photosensitized transformations involving electronic energy transfer in natural waters: role of humic substances.'' *Environmental Science and Technology,* 19:74. (1985).

[53 FR 34522, Sept. 7, 1988; 53 FR 37393, Sept. 26, 1988]

Subpart C—Provisional Environmental Effects Guidelines

§ 795.120 Gammarid acute toxicity test.

(a) *Purpose.* This guideline is intended for use in developing data on the acute toxicity of chemical substances and mixtures subject to environmental effects test regulations under the Toxic Substances Control Act (TSCA) (Pub. L. 94–469, 90 Stat. 2003 (15 U.S.C. 2601 *et seq.*)). This guideline describes a test to develop data on the acute toxicity of chemicals to gammarids. The United States Environmental Protection Agency (EPA) will use data from this test in assessing the hazard of a chemical to aquatic organisms.

(b) *Definitions.* The definitions in section 3 of TSCA and in part 792 of this chapter, Good Laboratory Practice Standards, apply to this test guideline. The following definitions also apply to this guideline:

Death means the lack of reaction of a test organism to gentle prodding.

Flow-through means a continuous or an intermittent passage of test solution or dilution water through a test chamber or a holding or acclimation tank, with no recycling.

LC50 means the median lethal concentration, i.e., that concentration of a chemical in air or water killing 50 percent of the test batch of organisms within a particular period of exposure (which shall be stated).

Loading means the ratio of the biomass of gammarids (grams, wet weight) to the volume (liters) of test solution in either a test chamber or passing through it in a 24-hour period.

Solvent means a substance (e.g., acetone) which is combined with the test substance to facilitate introduction of the test substance into the dilution water.

Static system means a test chamber in which the test solution is not renewed during the period of the test.

(c) *Test procedures*—(1) *Summary of the test.* In preparation for the test, test chambers are filled with appropriate volumes of dilution water. If a flow-through test is performed, the flow of dilution water through each chamber is adjusted to the rate desired. In a static test, the test substance is introduced into each test chamber. In a flow-through test, the rate in which the test substance is added is adjusted to establish and maintain the desired concentration of test substance in each test chamber. The test is started by randomly introducing gammarids, which have been acclimated to the test conditions, into the test chambers. Gammarids in the test chambers are observed periodically during the test; the dead gammarids are removed and the findings recorded. Dissolved oxygen concentration, pH, temperature, and the concentration of test substance in test chambers are measured at specified intervals. Data collected during the test are used to develop concentration—response curves and LC50 values for the test substance.

(2) [Reserved]

(3) *Range-finding test.* (i) A range-finding test should be conducted to establish test substance concentrations to be used for the definitive test.

(ii) The gammarids shall be exposed to a wide-range of concentrations of the test substance (e.g., 1, 10, 100 mg/1, etc.), usually under static conditions.

(iii) A minimum of five gammarids should be exposed to each concentration of test substance for a period of 96 hours. The exposure period may be shortened if data suitable for determining concentrations in the definitive test can be obtained in less time. Nominal concentrations of the test substance may be acceptable.

(4) *Definitive test.* (i) The purpose of the definitive test is to determine the 24, 48, 72, and 96—hour LC50 values and the concentration-response curves.

(ii) A minimum of 20 gammarids per concentration shall be exposed to five or more concentrations of the test substance chosen in a geometric series in which the ratio is between 1.5 and 2.0 (e.g., 2, 4, 8, 16, 32, 64 mg/L). The range and number of concentrations to which the organisms are exposed shall be such that in 96 hours there is at least one concentration resulting in mortality greater than 50 and less than 100 percent, and one concentration causing greater than zero and less than 50 percent mortality. An equal number of gammarids may be placed in two or more replicate test chambers. Solvents should be avoided, if possible. If solvents have to be used, a solvent control, as well as a dilution control, shall be tested at the highest solvent concentration employed in the treatments. The solvent should not be toxic or have an effect on the toxicity of the test substance. The concentration of solvent should not exceed 0.1 ml/L.

(iii) Every test shall include a concurrent control using gammarids from the same population or culture container. The control group shall be exposed to the same dilution water, conditions and procedures, except that none of the test substance shall be is added to the chamber.

(iv) The dissolved oxygen concentration, temperature and pH of the test solution shall be measured at the beginning of the test and at 24, 48, 72 and 96 hours in at least one replicate each of the control, and the highest, lowest and middle test concentrations.

(v) The test duration is 96 hours. The test is unacceptable if more than 10

percent of the control organisms die during the test.

(vi) In addition to death, any abnormal behavior or appearance shall also be reported.

(vii) Gammarids shall be randomly assigned to the test chambers. Test chambers shall be positioned within the testing area in a random manner or in a way in which appropriate statistical analyses can be used to determine whether there is any variation due to placement.

(viii) Gammarids shall be introduced into the test chambers after the test substance has been added.

(ix) Observations on compound solubility shall be recorded. The investigator should record the appearance of surface slicks, precipitates, or material adhering to the sides of the test chambers.

(5) [Reserved]

(6) *Analytical measurements*—(i) *Water quality analysis.* The hardness, acidity, alkalinity, pH, conductivity, TOC or COD, and particulate matter of the dilution water shall be measured at the beginning of each definitive test.

(ii) *Collection of samples for measurement of test substance.* Each sample to be analyzed for the test substance concentrations shall be taken at a location midway between the top, bottom, and sides of the test chamber. Samples should not include any surface scum or material dislodged from the bottom or sides. Samples shall be analyzed immediately or handled and stored in a manner which minimizes loss of test substance through microbial degradation, photogradation, chemical reaction, volatilization, or sorption.

(iii) *Measurement of test substance.* (A) For static tests, the concentration of dissolved test substance (that which passes through a 0.45 micron filter) shall be measured in each test chamber at least at the beginning (zero-hour, before gammarids are added) and at the end of the test. During flow-through tests, the concentration of dissolved test substance shall be measured in each test chamber at least at 0 and 96-hours and in at least one chamber whenever a malfunction of the test substance delivery system is observed.

(B) The analytical methods used to measure the amount of test substance in a sample shall be validated before beginning the test. This involves adding a known amount of the test substance to each of three water samples taken from a chamber containing dilution water and the same number of gammarids as are placed in each test chamber. The nominal concentrations of the test substance in these samples should span the concentration range to be used in the test. Validation of the analytical method should be performed on at least two separate days prior to starting the test.

(C) An analytical method is not acceptable if likely degradation products of the test substance give positive or negative interferences, unless it is shown that such degradation products are not present in the test chambers during the test.

(D) Among replicate test chambers, the measured concentrations shall not vary more than 20 percent. The measured concentration of the test substance in any chamber during the test shall not vary more than plus or minus 30 percent from the measured concentration in that chamber at zero time.

(E) The mean measured concentration of dissolved test substance shall be used to calculate all LC50's and to plot all concentration-response curves.

(d) *Test conditions for definitive test*—(1) *Test species*—(i) *Selection.* (A) The amphipods, *Gammarus fasciatus, G. pseudolimnaeus,* and *G. lacustris* are specified for this test.

(B) Gammarids can be cultured in the laboratory or collected from natural sources. If collected, they must be held in the laboratory for at least 14 days prior to testing.

(C) Gammarids used in a particular test shall be of similar age and/or size and from the same source or culture population.

(ii) *Acclimation.* If the holding water is from the same source as the dilution water, acclimation to the dilution water shall be done gradually over a 48-hour period. The gammarids then shall be held at least 7 days in the dilution water prior to testing. Any changes in water temperature should not exceed 2 °C per day. Gammarids should be held for a minimum of 7 days at the test temperature prior to testing.

(iii) *Care and handling.* Gammarids shall be cultured in dilution water under similar environmental conditions to those used in the test. Organisms shall be handled as little as possible. When handling is necessary it should be done as gently, carefully and quickly as possible. During culturing and acclimation, gammarids shall be observed carefully for signs of stress and mortality. Dead and abnormal individuals shall be discarded.

(iv) *Feeding.* The organisms shall not be fed during testing. During culturing, holding, and acclimation, a sufficient quantity of deciduous leaves, such as maple, aspen, or birch, should be placed in the culture and holding containers to cover the bottom with several layers. These leaves should be aged for at least 30 days in a flow-through system before putting them in aquaria. As these leaves are eaten, more aged leaves should be added. Pelleted fish food may also be added.

(2) *Facilities*—(i) *Apparatus*—(A) Facilities needed to perform this test include:

(*1*) Containers for culturing, acclimating and testing gammarids;

(*2*) Containers for aging leaves under flow-through conditions;

(*3*) A mechanism for controlling and maintaining the water temperature during the culturing, acclimation and test periods;

(*4*) Apparatus for straining particulate matter, removing gas bubbles, or aerating the dilution water, as necessary; and

(*5*) An apparatus for providing a 16-hour light and 8-hour dark photoperiod with a 15- to 30-minute transition period.

(B) Facilities should be well ventilated and free of fumes and disturbances that may affect the test organism.

(C) Test chambers shall be covered loosely to reduce the loss of test solution or dilution water due to evaporation and to minimize the entry of dust or other particulates into the solutions.

(ii) *Construction materials.* Construction materials and equipment that may contact the stock solution, test solution or dilution water should not contain substances that can be leached or dissolved into aqueous solutions in quantities that can alter the test results. Materials and equipment that contact stock or test solutions should be chosen to minimize sorption of test substances. Glass, stainless steel, and perfluorocarbon plastic should be used wherever possible. Concrete, fiberglass, or plastic (e.g., PVC) may be used for holding tanks, acclimation tanks, and water supply systems, but they should be aged prior to use. Rubber, coopper, brass, galvanized metal, and lead should not come in contact with the dilution water, stock solution, or test solution.

(iii) *Test substance delivery system.* In flow-through tests, diluters, metering pump systems or other suitable devices shall be used to deliver the test substance to the test chambers. The system used shall be calibrated before each test. The general operation of the test substance delivery system shall be checked twice daily during a test. The 24-hour flow shall be equal to at least five times the volume of the test chamber. During a test, the flow rates should not vary more than 10 percent from one test chamber to another.

(iv) *Test chambers.* Test chambers shall contain at least one liter of test solution. Test chambers made of stainless steel should be welded, not soldered. Test chambers made of glass should be glued using clear silicone adhesive. As little adhesive as possible should be left exposed in the interior of the chamber. A substrate, such as a bent piece of stainless steel screen, should be placed on the bottom of each test chamber to provide cover for the gammarids.

(v) *Cleaning of test system.* Test substance delivery systems and test chambers should be cleaned before each test. They should be washed with detergent and then rinsed sequentially with clean water, pesticide-free acetone, clean water, and 5-percent nitric acid, followed by two or more changes of dilution water.

(vi) *Dilution water.* (A) Clean surface or ground water, reconstituted water, or dechlorinated tap water is acceptable as dilution water if gammarids will survive in it for the duration of the culturing, acclimating, and testing periods without showing signs of

strees. The quality of the dilution water should be constant enough that the month-to-month variation in hardness, acidity, alkalinity, conductivity, TOC or COD, and particulate matter is not more than 10 percent. The pH should be constant within 0.4 unit. In addition, the dilution water should meet the following specifications measured at least twice a year:

Substance	Maximum concentration
Particulate matter	20 mg/L
Total organic carbon (TOC) or	2 mg/L
chemical oxygen demand (COD)	5 mg/L
Boron, fluoride	100 ug/L
Un-ionized ammonia	1 ug/L
Aluminum, arsenic, chromium, cobalt, copper, iron, lead, nickel, zinc.	1 ug/L
Residual chlorine	3 ug/L
Cadmium, mercury, silver	100 ng/L
Total organophosphorus pesticides	50 ng/L
Total organochlorine pesticides plus:	
polychlorinated biphenyls (PCBs) or	50 ng/L
organic chlorine	25 ng/L

(B) If the dilution water is from a ground or surface water source, conductivity and total organic carbon (TOC) or chemical oxygen demand (COD) shall be measured. Reconstituted water can be made by adding specific amounts of reagent-grade chemicals to deionized or distilled water. Glass-distilled or carbon-filtered deionized water with a conductivity less than 1 micromho/cm is acceptable as the diluent for making reconstituted water.

(C) The concentration of dissolved oxygen in the dilution water shall be between 90 and 100 percent saturation. If necessary, the dilution water can be aerated before the addition of the test substance. All reconstituted water should be aerated before use.

(3) *Test parameters.* Environmental parameters during the test shall be maintained as specified below:

(i) Water temperature of 18 ± 1 °C.

(ii) Dissolved oxygen concentration between 60 and 105 percent saturation.

(iii) The number of gammarids placed in a test chamber shall not be so great as to affect the results of the test. Ten gammarids per liter is the recommended level of loading for the static test. Loading requirements for the flow-through test will vary depending on the flow rate of dilution water. The loading should not cause the dissolved oxygen concentration to fall below the recommended levels.

(iv) Photoperiod of 16 hours light and 8 hours darkness.

(e) *Reporting.* The sponsor shall submit to the EPA all data developed by the test that are suggestive or predictive of toxicity. In addition, the test report shall include, but not necessarily be limited to, the following information:

(1) Name and address of the facility performing the study and the dates on which the study was initiated and completed.

(2) Objectives and procedures stated in the approved protocol, including any changes in the original protocol.

(3) Statistical methods employed for analyzing the data.

(4) The test substance identified by name, Chemical Abstracts (CAS) number or code number, source, lot or batch number, strength, purity, and composition, or other appropriate characteristics.

(5) Stability of the test substance under the conditions of the test.

(6) A description of the methods used, including:

(i) The source of the dilution water, its chemical characteristics (e.g., hardness, pH, etc.) and a description of any pretreatment.

(ii) A description of the test substance delivery system, test chambers, the depth and volume of solution in the chamber, the way the test was begun (e.g., test substance addition), the loading, the lighting, and the flow rate.

(iii) Frequency and methods of measurements and observations.

(7) The scientific name, weight, length, source, and history of the organisms used, and the acclimation procedures and food used.

(8) The concentrations tested, the number of gammarids and replicates per test concentration. The reported results should include:

(i) The results of dissolved oxygen, pH and temperature measurements.

(ii) If solvents are used, the name and source of the solvent, the nominal concentration of the test substance in the stock solution, the highest solvent concentration in the test solution and a description of the solubility determination in water and solvents.

(iii) The measured concentration of the test substance in each test chamber just before the start of the test and at all subsequent sampling periods.

(iv) In each test chamber at each observation period, the number of dead and live test organisms, the percentage of organisms that died, and the number of test organisms that showed any abnormal effects in each test chamber at each observation period.

(v) The 48, 72 and 96-hour LC50's and their 95 percent confidence limits. When sufficient data have been generated, the 24-hour LC50 value also. These calculations should be made using the mean measured test substance concentrations.

(vi) The observed no-effect concentration (the highest concentration tested at which there were no mortalities or abnormal behavioral or physiological effects), if any.

(vii) Methods and data for all chemical analyses of water quality and test substance concentrations, including method validations and reagent blanks.

(9) A description of all circumstances that may have affected the quality or integrity of the data.

(10) The names of the sponsor, study director, principal investigator, names of other scientists or professionals, and the names of all supervisory personnel involved in the study.

(11) A description of the transformations, calculations, or operations performed on the data, a summary and analysis of the data, and a statement of the conclusions drawn from the analysis. Results of the analysis of data should include the calculated LC50 value, 95 percent confidence limits, slope of the transformed concentration-response line, and the results of a goodness-of-fit test (e.g., chi-square test).

(12) The signed and dated reports prepared by any individual scientist or other professional involved in the study, including each person who, at the request or direction of the testing facility or sponsor, conducted an analysis or evaluation of data or specimens from the study after data generation was completed.

(13) The locations where all specimens, raw data, and the final report are stored.

(14) The statement prepared and signed by the quality assurance unit.

[52 FR 24462, July 1, 1987]

Subpart D—Provisional Health Effects Guidelines

§ 795.225 Dermal pharmacokinetics of DGBE and DGBA.

(a) *Purpose.* The purpose of these studies is to determine:

(1) The absorption of diethylene glycol butyl ether (DGBE) after administration by the dermal route.

(2) The biotransformation of DGBE administered dermally.

(3) The dermal absorption of DGBE and diethylene glycol butyl ether acetate (DGBA).

(b) *Test procedures*—(1) *Animal selection*—(i) *Species.* The species utilized for investigating DGBE and DGBA shall be the rat, a species for which historical data on the toxicity and carcinogenicity of many compounds are available and which is used extensively in percutaneous absorption studies.

(ii) *Animals.* Adult female Sprague Dawley rats shall be used. The rats shall be 7 to 8 weeks old and weigh 180 to 220 grams. Prior to testing, the animals shall be selected at random for each group. Animals showing signs of ill health shall not be used.

(iii) *Animal care.* (A) The animals should be housed in environmentally controlled rooms with 10 to 15 air changes per hour. The rooms should be maintained at a temperature of 25 ± 2 °C and humidity of 50 ±10 percent with a 12-hour light/dark cycle per day. The rats should be isolated for at least 7 days prior to use.

(B) During the acclimatization period, the rats should be housed in cages on hardwood chip bedding. All animals shall be provided with conventional laboratory diets and water ad libitum.

(2) *Administration of DGBE and DGBA*—(i) *Test substances.* These studies require the use of ^{14}C-labeled DGBE and DGBA. The use of ^{14}C-DGBE and ^{14}C-DGBA is required for the determinations in paragraphs (a) (1), (2), and (3) of this section because they will facilitate the work and improve the reliability of quantitative determinations.

(ii) *Dosage and treatment.* (A) Two doses of DGBA shall be used in the study, a ''low'' dose and a ''high'' dose. Three doses of DGBE shall be used in the study, a neat ''low'' dose, an aqueous ''low'' dose, and neat ''high'' dose. When administered dermally, the ''high'' dose level should ideally induce some overt toxicity such as weight loss. The ''low'' dose level should correspond to a no observed effect level.

(B) For dermal treatment, the doses shall be applied in a volume adequate to deliver the prescribed doses. The backs of the rats should be lightly shaved with an electric clipper shortly before treatment. The dose shall be applied with a micropipette on a specific area (for example, 2 cm^2) on the freshly shaven skin.

(iii) *Washing efficiency study.* Before initiation of the dermal absorption studies described in paragraph (b)(2)(iv)(A) of this section, an initial washing efficiency experiment shall be performed to assess the extent of removal of the applied DGBE and DGBA by washing with soap and water. Groups of four rats should be lightly anesthetized with sodium pentobarbital. These animals shall then be treated with dermal doses of test substance at the low dose level. Soon after application (5 to 10 minutes) the treated animals shall be washed with soap and water then housed in individual metabolism cages for excreta collection. Urine and feces shall be collected at 8, 24, and 48 hours following dosing. Collection of excreta shall continue every 24 hours if a significant amounts of DGBE, DGBA, or metabolites continue to be eliminated.

(iv) *Determination of absorption, biotransformation, and excretion.* (A) Eight animals shall be dosed once dermally with the low dose of ^{14}C-DGBE.

(B) Eight animals shall be dosed once dermally with the high dose of ^{14}C-DGBE.

(C) Eight animals shall be dosed once dermally with the low dose of ^{14}C-DGBA.

(D) Eight animals shall be dosed once dermally with the high dose of ^{14}C-DGBA.

(E) The high and low doses of ^{14}C-DGBE and ^{14}C-DGBA shall be kept on the skin for 24 hours. After application, the animals shall be placed in metabolism cages for excreta collection. After 24 hours, any test material remaining on the skin will be washed off and the containment cell removed. Radiolabeled material in the wash will be accounted for in the total recovery. Urine and feces shall be collected at 8, 24, 48, 72, and 96 hours after dosing, and if necessary, daily thereafter until at least 90 percent of the dose has been excreted or until 7 days after dosing, whichever occurs first.

(3) *Observation of animals*—(i) *Urinary and fecal excretion.* The quantities of total ^{14}C excreted in urine and feces by rats dosed as specified in paragraph (b)(2)(iv) of this section shall be determined at 8, 24, 48, 72 and 96 hours after dosing, and if necessary, daily thereafter until at least 90 percent of the dose has been excreted or until 7 days after dosing (whichever occurs first). Four animals from each group shall be used for this purpose.

(ii) *Biotransformation after dermal dosing.* Appropriate qualitative and quantitative methods shall be used to assay urine specimens collected from rats dosed with DGBE as specified in paragraph (b)(2)(iv) of this section. Any metabolite which comprises greater than 10 percent of the dose shall be identified.

(c) *Data and reporting*—(1) *Treatment of results.* Data shall be summarized in tabular form.

(2) *Evaluation of results.* All observed results, quantitative or incidental, shall be evaluated by an appropriate statistical method.

(3) *Test report.* In addition to the reporting requirements as specified in the TSCA Good Laboratory Practice Standards, in part 792, subpart J of this chapter, the following specific information shall be reported:

(i) Species, strain, and supplier of laboratory animals.

(ii) Information on the degree (i.e., specific activity for a radiolabel) and sites of labeling of the test substances.

(iii) A full description of the sensitivity and precision of all procedures used to produce the data.

(iv) Relative percent absorption by the dermal route for rats administered low and high doses of ^{14}C-DGBE and ^{14}C-DGBA.

(v) Quantity of isotope, together with percent recovery of the administered dose, in feces and urine.

(vi) Biotransformation pathways and quantities of DGBE and metabolites in urine collected after administering single high and low dermal doses to rats.

[53 FR 5946, Feb. 26, 1988, as amended at 54 FR 41834, Oct. 12, 1989]

§ 795.228 Oral/dermal pharmacokinetics.

(a) *Purpose.* The purposes of these studies are to:

(1) Ascertain whether the pharmacokinetics and metabolism of a chemical substance or mixture (''test substance'') are similar after oral and dermal administration.

(2) Determine bioavailability of a test substance after oral and dermal administration.

(3) Examine the effects of repeated dosing on the pharmacokinetics and metabolism of the test substance.

(b) *Definitions.* (1) *Bioavailability* refers to the rate and relative amount of administered test substance which reaches the systemic circulation.

(2) *Metabolism* means the study of the sum of the processes by which a particular substance is handled in the body and includes absorption, tissue distribution, biotransformation, and excretion.

(3) *Percent absorption* means 100 times the ratio between total excretion of radioactivity following oral or dermal administration and total excretion following intravenous administration of test substance.

(4) *Pharmacokinetics* means the study of the rates of absorption, tissue distribution, biotransformation, and excretion.

(c) *Test procedures*—(1) *Animal selection*—(i) *Species.* The rat shall be used for pharmacokinetics testing because it has been used extensively for metabolic and toxicological studies. For dermal bioavailability studies, the rat and the mini-pig shall be used.

(ii) *Test animals.* For pharmacokinetics testing and dermal studies, adult male and female Sprague–Dawley rats, 7 to 9 weeks of age, shall be used. For dermal studies, young adult mini-pigs shall also be used. The animals should be purchased from a reputable dealer and shall be identified upon arrival at the testing laboratory. The animals shall be selected at random for the test groups and any animal showing signs of ill health shall not be used. In all studies, unless otherwise specified, each test group shall contain at least 4 animals of each sex for a total of at least 8 animals.

(iii) *Animal care.* (A) The animals shall be housed in environmentally controlled rooms with at least 10 air changes per hour. The rooms shall be maintained at a temperature of 24 ± 2 °C and humidity of 50 ± 20 percent with a 12-hour light/dark cycle per day. The animals shall be kept in a quarantine facility for at least 7 days prior to use and shall be acclimated to the experimental environment for a minimum of 48 hours prior to administration of the test substance.

(B) During the acclimatization period, the animals shall be housed in suitable cages. All animals shall be provided with certified feed and tap water *ad libitum.* The mini-pig diet shall be supplemented with adequate amounts of ascorbic acid in the drinking water.

(2) *Administration of test substance*—(i) *Test substance.* The use of a radioactive test substance is required for all studies. Ideally, the purity, radioactive and nonradioactive, is greater than 99 percent. The radioactive and nonradioactive test substances shall be chromatographed separately and together to establish purity and identity. If the purity is less than 99 percent or if the chromatograms differ significantly, EPA should be consulted.

(ii) *Dosage and treatment*—(A) *Intravenous.* The low dose of test substance, in an appropriate vehicle, shall be administered intravenously to groups of rats and mini-pigs of each sex. If feasible, the same low dose should be used for intravenous, oral, and dermal studies.

(B) *Oral.* Two doses of text substance shall be used in the oral study, a low dose and a high dose. The high dose should ideally induce some overt toxicity, such as weight loss. The low dose

should correspond to a no–observed effect level. The oral dosing shall be accomplished by gavage or by administering the encapsulated test substance. If feasible, the same high and low doses should be used for oral and dermal studies.

(C) *Dermal.* (*1*) *Dermal treatment.* For dermal treatment, two doses, comparable to the low and high oral doses, shall be dissolved in a suitable vehicle and applied in volumes adequate to deliver comparable doses. The backs of the animals should be lightly shaved with an electric clipper 24 hours before treatment. The test substance shall be applied to the intact shaven skin (approximately 2 cm^2 for rats, 5 cm^2 for mini-pigs). The dosed areas shall be protected with a suitable porous covering which is secured in place, and the animals shall be housed separately.

(*2*) *Washing efficacy study.* Before initiation of the dermal absorption studies, an initial washing efficacy experiment shall be conducted to assess the removal of the applied low dose of the test substance by washing the exposed skin area with soap and water and an appropriate organic solvent. The low dose shall be applied to 4 rats and 4 mini-pigs in accordance with paragraph (c)(2)(ii)(C)(*1*) of this section. After application (5 to 10 minutes), the treated areas of 2 rats and 2 mini-pigs shall be washed with soap and water and the treated areas of the remaining rats and pigs shall be washed with an appropriate solvent. The amounts of test substance recovered in the washings shall be determined to assess efficacy of its removal by washing.

(iii) *Dosing and sampling schedule*—(A) *Rat studies.* After administration of the test substance, each rat shall be placed in a metabolic unit to facilitate collection of excreta. For the dermal studies, excreta from the rats shall also be collected during the 6 hour exposure periods. At the end of each collection period, the metabolic units shall be cleaned to recover any excreta that might adhere to them. All studies, except the repeated dosing study, shall be terminated at 7 days or after at least 90 percent of the radioactivity has been recovered in the excreta, whichever occurs first.

(*1*) *Intravenous study.* Group A shall be dosed once intravenously at the low dose of test substance.

(*2*) *Oral study.* (*i*) Group B shall be dosed once per os with the low dose of test substance.

(*ii*) Group C shall be dosed once per os with the high dose of test substance.

(*3*) *Dermal studies.* Unless precluded by corrosivity, the test substance shall be applied and kept on the skin for a minimum of 6 hours. At the time of removal of the porous covering, the treated area shall be washed with an appropriate solvent to remove any test substance that may be on the skin surface. Both the covering and the washing shall be assayed to recover residual radioactivity. At the termination of the studies, each animal shall be sacrificed and the exposed skin area removed. An appropriate section of the skin shall be solubilized and assayed for radio-activity to ascertain if the skin acts as a reservoir for the test substance. Studies on the dermal absorption of corrosive test substances should be discussed with EPA prior to initiation.

(*i*) Group D shall be dosed once dermally with the low dose of test compound.

(*ii*) Group E shall be dosed once dermally with the high dose of the test substance.

(*4*) *Repeated dosing study.* Group F shall receive a series of single daily oral low doses of nonradioactive test substance over a period of at least 7 days. Twenty-four hours after the last nonradioactive dose, a single oral low dose of radioactive test substance shall be administered. Following dosing with the radioactive substance, the rats shall be placed in individual metabolic units as described in paragraph (c)(2)(iii) of this section. The study shall be terminated at 7 days after the last dose, or after at least 90 percent of the radioactivity has been recovered in the excreta, whichever occurs first.

(B) *Mini-Pig studies.* For all mini-pig studies, the test groups shall consist of four young adult animals. After administration of the test substance, each mini-pig shall be kept in a metabolic unit to facilitate collection of excreta. At the end of each collection period, the metabolic units are to be cleaned

to recover any excreta that might adhere to them. All studies shall be terminated at 7 days, or after at least 90 percent of the radio-activity has been recovered in the excreta, whichever occurs first.

(*1*) *Intravenous study*. Group G is to be dosed once intravenously at the low dose of the test substance.

(*2*) *Dermal studies*. Following the experimental guidance described in (c)(2)(iii)(A)(*3*) of this section:

(*i*) Group H shall be dosed once dermally with the low dose of test substance.

(*ii*) Group I shall be dosed once dermally with the high dose of the test substance.

(3) *Types of studies*—(i) *Pharmacokinetics studies*—(A) *Rat studies*. Groups A through F shall be used to determine the kinetics of absorption of the test substance. In the group administered the test substance by intravenous routes, (i.e., Group A), the concentration of radioactivity in blood and excreta shall be measured following administration. In groups administered the test substance by the oral and dermal route (i.e., Groups B, C, D, E and F), the concentration of radioactivity in blood and excreta shall be measured at selected time intervals during and following the exposure period.

(B) *Mini-Pig studies*. Groups G, H, and I shall be used to determine the extent of dermal absorption of the test substance. The amount of radioactivity in excreta shall be determined at selected time intervals.

(ii) *Metabolism studies—Rat studies*. Groups A through F shall be used to determine the metabolism of the test substance. Urine, feces, and expired air shall be collected for identification and quantification of the test substance and metabolites.

(4) *Measurements*—(i) *Pharmacokinetics*. Four animals from each group shall be used for these purposes.

(A) *Rat studies*—(*1*) *Bioavailability*. The levels of radioactivity shall be determined in whole blood, blood plasma or blood serum at 15 and 30 minutes and at 1, 2, 8, 24, 48, and 96 hours after initiation of dosing.

(*2*) *Extent of absorption*. The total quantities of radioactivity shall be determined for excerta collected daily for 7 days or until at least 90 percent of the radioactivity has been recovered in the excreta.

(*3*) *Excretion*. The quantities of radioactivity eliminated in the urine, feces, and expired air shall be determined separately at appropriate time intervals. The collection of carbon dioxide may be discontinued when less than one percent of the dose is found to be exhaled as radioactive carbon dioxide in 24 hours.

(*4*) *Tissue distribution*. At the termination of each study, the quantities of radioactivity in blood and in various tissues, including bone, brain, fat, gastrointestinal tract, gonads, heart, kidney, liver, lungs, muscle, skin, and residual carcass of each animal shall be determined.

(*5*) *Changes in pharmacokinetics*. Results of pharmacokinetics measurements (i.e., bioavailability and extent of absorption, tissue distribution, and excretion) obtained in rats receiving the single low oral dose of the test substance (Groups B and C) shall be compared to the corresponding results obtained in rats receiving repeated oral doses of the test substance (Group F).

(B) *Mini-Pig studies—Extent of absorption*. The total quantities of radioactivity shall be determined for excreta daily for 7 days or until at least 90 percent of the test substance has been excreted.

(ii) *Metabolism*. Four animals from each group shall be used for these purposes.

(A) *Rat studies*—(*1*) *Biotransformation*. Appropriate qualitative and quantitative methods shall be used to assay urine, feces, and expired air collected from rats. Efforts shall be made to identify any metabolite which comprises 5 percent or more of the administered dose and the major radioactive components of blood.

(*2*) *Changes in biotransformation*. Appropriate qualitative and quantitative assay methodology shall be used to compare the composition of radioactive compounds in excreta from rats receiving a single oral dose (Groups B and C) with those in the excreta from rats receiving repeated oral doses (Group H).

(d) *Data and reporting*. The final test report shall include the following:

(1) *Presentation of results.* Numerical data shall be summarized in tabular form. Pharmacokinetic data shall also be presented in graphical form. Qualitative observations shall also be reported.

(2) *Evaluation of results.* All quantitative results shall be evaluated by an appropriate statistical method.

(3) *Reporting results.* In addition to the reporting requirements as specified in 40 CFR part 792, the following specific information shall be reported:

(i) Species and strains of laboratory animals.

(ii) Chemical characterization of the test substance, including:

(A) For the radioactive test substances, information on the site(s) and degree of radiolabeling, including type of label, specific activity, chemical purity, and radiochemical purity.

(B) For the nonradioactive compound, information on chemical purity.

(C) Results of chromatography.

(iii) A full description of the sensitivity, precision, and accuracy of all procedures used to generate the data.

(iv) Percent of absorption of test substance after oral and dermal exposures to rats and dermal exposure to mini-pigs.

(v) Quantity and percent recovery of radioactivity in feces, urine, expired air, and blood. In dermal studies on rats and mini-pigs, include recovery data for skin, skin washings, and residual radioactivity in the covering as well as results of the washing efficacy study.

(vi) Tissue distribution reported as quantity of radioactivity in blood and in various tissues, including bone, brain, fat, gastrointestinal tract, gonads, heart, kidney, liver, lung, muscle, skin and in residual carcass of rats.

(vii) Materials balance developed from each study involving the assay of body tissues and excreta.

(viii) Biotransformation pathways and quantities of test substance and metabolites in excreta collected after administering single high and low doses to rats.

(ix) Biotransformation pathways and quantities of the test substance and metabolites in excreta collected after administering repeated low doses to rats.

(x) Pharmacokinetics model(s) developed from the experimental data.

[54 FR 33411, Aug. 14, 1989; 54 FR 49844, Dec. 1, 1989; 55 FR 25392, June 21, 1990]

§ 795.231 Pharmacokinetics of isopropanal.

(a) *Purpose.* The purposes of these studies are to:

(1) Ascertain whether the pharmacokinetics and metabolism of the ''test substance'' are similar after oral and inhalation administration.

(2) Determine bioavailability of the test substance after oral and inhalation administration.

(3) Examine the effects of repeated dosing on the pharmacokinetics and metabolism of the test substance.

(b) *Definitions.* (1) ''*Bioavailability*'' refers to the rate and relative amount of administered test substance which reaches the systemic circulation.

(2) ''*Metabolism*'' means the study of the sum of the processes by which a particular substance is handled in the body, and includes absorption, tissue distribution, biotransformation, and excretion.

(3) ''*Pharmacokinetics*'' means the study of the rates of absorption, tissue distribution, biotransformation, and excretion.

(c) *Test procedures*—(1) *Animal selection*—(i) *Species.* The rat shall be used because it has been used extensively for metabolic and toxicological studies.

(ii) *Test animals.* For pharmacokinetics testing, adult male and female rats (Fischer 344 or strain used for major toxicity testing), 7 to 9 weeks of age, shall be used. The animals should be purchased from a reputable dealer and shall be identified upon arrival at the testing laboratory. The animals shall be selected at random for the testing groups and any animal showing signs of ill health shall not be used. In all studies, unless otherwise specified, each test group shall contain at least four animals of each sex for a total of at least eight animals.

(iii) *Animal care.* (A) Animal care and housing should be in accordance with DHEW Publication No. (NIH)-85-23, 1985, entitled ''Guidelines for the Care and Use of Laboratory Animals.''

(B) The animals should be housed in environmentally controlled rooms with at least 10 air changes per hour. The rooms shall be maintained at a temperature of 22±2 °C and humidity of 50±20 percent with a 12-hour light/dark cycle per day. The animals shall be kept in a quarantine facility for at least 7 days prior to use and shall be acclimated to the experimental environment for a minimum of 48 hours prior to treatment.

(C) During the acclimatization period, the animals should be housed in suitable cages. All animals shall be provided with certified feed and tap water *ad libitum*.

(2) *Administration of test substance*—(i) *Test substance.* The use of radioactive test substance is required for all materials balance and metabolite identification requirements of the study. Ideally, the purity of both radioactive and nonradioactive test substance should be greater than 99 percent. The radioactive and nonradioactive substances shall be chromatographed separately and together to establish purity and identity. If the purity is less than 99 percent or if the chromatograms differ significantly, EPA should be consulted.

(ii) *Dosage and treatment*—(A) *Intravenous.* The low dose of test substance, in an appropriate vehicle, shall be administered intravenously to four rats of each sex.

(B) *Oral.* Two doses of test substance shall be used in the oral portion of the study, a low dose and a high dose. The high dose should ideally induce some overt toxicity, such as weight loss. The low dose level should correspond to a no-observed effect level. The oral dosing shall be accomplished by gavage or by administering an encapsulated test substance. If feasible, the same high and low doses should be used for oral and dermal studies.

(C) *Inhalation*. Two concentrations of the test substance shall be used in this portion of the study, a low concentration and a high concentration. The high concentration should ideally induce some overt toxicity, while the low concentration should correspond to a no observed level. Inhalation treatment should be conducted using a ''nose-cone'' or ''head only'' apparatus to prevent ingestion of the test substance through ''grooming''.

(iii) *Dosing and sampling schedule.* After administration of the test substance, each rat shall be placed in a separate metabolic unit to facilitate collection of excreta. For the inhalation studies, excreta from the rats shall also be collected during the exposure periods. At the end of each collection period, the metabolic units shall be cleaned to recover any excreta that might adhere to the cages. All studies, except the repeated dose study, shall be terminated at 7 days, or after at least 90 percent of the radioactivity has been recovered in the excreta, whichever occurs first.

(A) *Intravenous study*. Group A shall be dosed once intravenousely at the low dose of test substance.

(B) *Oral studies.* (*1*) Group B shall be dosed once *per os* with the low dose of the test substance.

(*2*) Group C shall be dosed once *per os* with the high dose of the test substance.

(C) *Inhalation studies.* A single 6-hour exposure period shall be used for each group.

(*1*) Group D shall be exposed to a mixture of the test substance in air at the low concentration.

(*2*) Group E shall be exposed to a mixture of test substance in air at the high concentration.

(D) *Repeated dosing study*. Group F shall receive a series of single daily oral low doses of nonradioactive test substance over a period of at least 7 consecutive days. Twenty four hours after the last nonradioactive dose, a single oral low dose of radioactive test substance shall be administered. Following dosing with radioactive substance, the rats shall be placed in individual metabolic units as described in paragraph (c)(2)(iii) of this section. The study shall be terminated 7 days after the last dose, or after at least 90 percent of the radioactivity has been recovered in the excreta, whichever occurs first.

(3) *Types of studies*—(i) *Pharmacokinetics studies.* Groups A through F shall be used to determine the kinetics of absorption of the test substance. In groups administered the substance by intravenous or oral routes, (i.e., Groups

A, B, C, F), the concentration of radioactivity in blood and excreta including expired air shall be measured following administration. In groups administered the substance by the inhalation route (i.e., Groups D and E), the concentration of radioactivity in blood shall be measured at selected time intervals during and following the exposure period. In the groups administered the substance by inhalation (i.e., Groups D and E), the concentration of radioactivity in excreta (including expired air) shall be measured at selected time intervals following the exposure period. In addition, in the groups administered the substance by inhalation, the concentration of test substance in inspired air shall be measured at selected time intervals during the exposure period.

(ii) *Metabolism studies.* Groups A through F shall be used to determine the metabolism of the test substance. Excreta (urine, feces, and expired air) shall be collected for identification and quantification of test substance and metabolites.

(4) *Measurements*—(i) *Pharmacokinetics.* Four animals from each group shall be used for these purposes.

(A) *Bioavailability*. The levels of radioactivity shall be determined in whole blood, blood plasma or blood serum at 15 minutes, 30 minutes, 1, 2, 3, 6, 9, and 18 hours after dosing; and at 30 minutes, 3, 6, 6.5, 7, 8, 9, 12, and 18 hours after initation of inhalation exposure.

(B) *Extent of absorption*. The total quantities of radioactivity shall be determined for excreta collected daily for 7 days, or after at least 90 percent of the radioactivity has been recovered in the excreta, whichever occurs first.

(C) *Excretion*. The quantities of radioactivity eliminated in the urine, feces, and expired air shall be determined separately at appropriate time intervals. The collection of the intact test substance or its metabolites, including carbon dioxide, may be discontinued when less than 1 percent of the administered dose is found to be exhaled as radioactive carbon dioxide in 24 hours.

(D) *Tissue distribution*. At the termination of each study, the quantities of radioactivity in blood and in various tissues, including bone, brain, fat, gastrointestinal tract, gonads, heart, kidney, liver, lungs, muscle, skin, spleen, and residual carcass of each animal shall be determined.

(E) *Changes in pharmacokinetics.* Results of pharmacokinetics measurements (i.e., biotransformation, extent of absorption, tissue distribution, and excretion) obtained in rats receiving the single low oral dose of test substance (Group B) shall be compared to the corresponding results obtained in rats receiving repeated oral doses of test substance (Group F).

(F) *Biotransformation*. Appropriate qualitative and quantitative methods shall be used to assay urine, feces, and expired air collected from rats. Efforts shall be made to identify any metabolite which comprises 5 percent or more of the dose eliminated.

(G) *Changes in biotransformation*. Appropriate qualitative and quantitative assay methodology shall be used to compare the composition of radioactive substances in excreta from the rats receiving a single oral dose (Groups B and C) with those in the excreta from rats receiving repeated oral doses (Group F).

(ii) [Reserved]

(d) *Data and reporting.* The final test report shall include the following:

(1) *Presentation of results.* Numerical data shall be summarized in tabular form. Pharmacokinetics data shall also be presented in graphical form. Qualitative observations shall also be reported.

(2) *Evaluation of results.* All quantitative results shall be evaluated by an appropriate statistical method.

(3) *Reporting results.* In addition to the reporting requirements as specified in the EPA Good Laboratory Practice Standards (40 CFR 792.185), the following specific information shall be reported:

(i) Species and strains of laboratory animals.

(ii) Chemical characterization of the test substance, including:

(A) For the radioactive test substance, information on the site(s) and degree of radiolabeling, including type of label, specific activity, chemical purity, and radiochemical purity.

(B) For the nonradioactive substance, information on chemical purity.

(C) Results of chromatography.

(iii) A full description of the sensitivity, precision, and accuracy of all procedures used to generate the data.

(iv) Extent of absorption of the test substance as indicated by: percent absorption of the administered oral dose; and total body burden after inhalation exposure.

(v) Quantity and percent recovery of radioactivity in feces, urine, expired air, and blood.

(vi) Tissue distribution reported as quantity of radioactivity in blood and in various tissues, including bone, brain, fat, gastrointestinal tract, gonads, heart, kidney, liver, lung, muscle, skin, spleen and in residual carcass of each rat.

(vii) Biotransformation pathways and quantities of the test substance and metabolites in excreta collected after administering single high and low doses to rats.

(viii) Biotransformation pathways and quantities of the test substance and metabolites in excreta collected after administering repeated low doses to rats.

(ix) Pharmacokinetics model(s) developed from the experimental data.

[54 FR 43261, Oct. 23, 1989]

§ 795.232 Inhalation and dermal pharmacokinetics of commercial hexane.

(a) *Purposes.* The purposes of these studies are to:

(1) Determine the bioavailability of the test substances after dermal and inhalation administration.

(2) Compare the pharmacokinetics and metabolism of the test substances after intravenous, dermal, and inhalation administration.

(3) Examine the effects of repeated doses on the pharmacokinetics and metabolism of the test substances.

(b) *Definitions.* (1) *Bioavailability* refers to the relative amount of administered test substance which reaches the systemic circulation and the rate at which this process occurs.

(2) *Metabolism* means the sum of the enzymatic and nonenzymatic processes by which a particular substance is handled in the body.

(3) *Pharmacokinetics* means the study of the rates of absorption, tissue distribution, biotransformation, and excretion.

(4) *Low dose* should correspond to 1/10 of the high dose.

(5) *High dose* shall not exceed the lower explosive limit (LEL) and ideally should induce minimal toxicity.

(6) *Test substance* refers to the unlabeled and both radiolabeled mixtures (^{14}C-*n*-hexane and ^{14}C-methylcyclopentane) of commercial hexane used in the testing.

(c) *Test procedures*—(1) *Animal selection*—(i) *Species.* The rat shall be used for pharmacokinetics testing because it has been used extensively for metabolic and toxicological studies.

(ii) *Test animals.* Adult male and female rats shall be used for testing. The rats shall be 7 to 9 weeks old and their weight range should be comparable from group to group. The animals shall be purchased from a reputable dealer and shall be permanently identified upon arrival. The animals shall be selected at random for the testing groups, and any animal showing signs of ill health shall not be used.

(iii) *Animal care.* (A) Animal care and housing shall be in accordance with DHHS/PHS NIH Publication No. 86–23, 1985, ''*Guidelines for the Care and Use of Laboratory Animals.*''

(B) The animals shall be housed in environmentally controlled rooms with at least 10 air changes per hour. The rooms shall be maintained at a temperature of 18 to 26 degrees centigrade and humidity of 40 to 70 percent with a 12–hour light/dark cycle per day. The animal subjects shall be kept in a quarantine facility for at least 7 days prior to use, and shall be acclimated to the experimental environment for a minimum of 48 hours prior to treatment.

(C) During the acclimatization period, the rats shall be housed in suitable cages. All animals shall be provided with certified feed and tap water *ad libitum.*

(2) *Administration of test substances*—(i) *Test substances.* The study will require the use of both radiolabeled and unlabeled test substances. All unlabeled commercial hexane shall be from the same lot number. Two kinds of radiolabeled test substances will be tested. ^{14}C-*n*-hexane shall be the only radiolabeled component of one, and ^{14}C-MCP shall be the only radiolabeled component of the other test substance.

The use of both radiolabeled test substances is required for all pharmacokinetics and metabolism studies described in this rule, except for the bioavailability measurements required in (c)(4)(i)(A) of this section. The bioavailability measurements need only be conducted with the test substance containing ^{14}C-*n*-hexane or an unlabeled test substance may be used if it can be demonstrated that the analytical sensitivity of the method used with the unlabeled test substance is equal to or greater than the sensitivity which could be obtained with the radiolabeled test substance. If an unlabeled test substance is used for bioavailability measurements, these measurements shall be extended to include relevant metabolites of *n*-hexane. These test substances shall contain at least 40 liquid volume percent but no more than 55 liquid volume percent *n*-hexane and no less than 10 liquid volume percent methylcyclopentane (MCP) and otherwise conform to the specifications prescribed in the American Society for Testing and Materials Designation D 1836–83 (ASTM D 1836), ''Standard Specification for Commercial Hexanes'', published in the *1986 Annual Book of ASTM Standards: Petroleum Products and Lubricants*, ASTM D 1836–83, pp. 966–967, 1986, which is incorporated by reference in accordance with 5 U.S.C. 552(a). ASTM D 1863–83 is available for public inspection at the Office of the Federal Register, Suite 700, 800 North Capitol St., NW., Washington, DC, and copies may be obtained from the Non-Confidential Information Center (NCIC) (7407), Office of Pollution Prevention and Toxics, U.S. Environmental Protection Agency, Room B–607 NEM, 401 M Street, SW., Washington, DC 20460, between the hours of 12 p.m. and 4 p.m. weekdays excluding legal holidays. This incorporation by reference was approved by the Director of the Office of the Federal Register in accordance with 5 U.S.C. 552(a) and 1 CFR part 51. This material is incorporated as it exists on the date of approval, and a notice of any change in this material will be published in the FEDERAL REGISTER.

(ii) *Dosage and treatment*—(A) *Intravenous.* An appropriate dose of the test substance shall be administered intravenously. The intravenous data obtained in this portion of the study shall be suitable for the determination of absorption, distribution, and excretion parameters of the test substance. Factors that should be considered in the selection of the intravenous doses are: The acute toxicity of the test substance, the availability of a suitable vehicle (if saline is unsuitable) and the solubility of the test substance in the vehicle.

(B) *Inhalation.* Two concentrations of each test substance shall be used in this portion of the study, a low concentration and a high concentration. The high concentration should induce minimal toxicity, but shall not exceed the lower explosive limit (LEL). The low concentration shall correspond to 1/10 of the high concentration. Inhalation treatment shall be conducted using a ''nose-cone'' or ''head only'' apparatus to reduce ingestion of the test substance through ''grooming'' or dermal absorption.

(C) *Dermal.* Dermal absorption studies should be conducted by the methodology of Susten, A.S., Dames, B.L. and Niemeier, R.W., ''*In vivo* percutaneous absorption studies of volatile solvents in hairless mice. I. Description of a skin depot'', In: *Journal of Applied Toxicology* 6:43–46, (1986), or by some other suitable method because the test substances have significant volatility. The high and low doses shall be tested in rats.

(iii) *Dosing and sampling schedule.* Each experimental group shall contain at least four animals of each sex. After administration of the test substance, each rat shall be placed in an individual metabolic unit for collection of urine, feces, and expired air. For the dermal studies, excreta from the rats shall also be collected during the exposure periods. At the end of each collection period, the metabolic units shall be cleaned to recover any excreta that might adhere to the units. All studies, except the repeated dose studies, shall be terminated at 7 days, or after at least 90 percent of the administered radioactivity has been recovered in the excreta, whichever occurs first. All studies described below shall be conducted separately with each radiolabeled test substance.

(A) *Intravenous study*. Group A shall be given a single intravenous dose of the radiolabeled test substance to result in a level of commercial hexane in the blood that approximates the level from the other routes of exposure so that the data can be used to determine absorption and excretion parameters.

(B) *Inhalation studies*. A single 6–hour exposure period shall be used for each group.

(*1*) Group B shall be exposed to a mixture of the radiolabeled test substance in air at the low concentration.

(*2*) Group C shall be exposed to a mixture of the radiolabeled test substance in air at the high concentration.

(C) *Dermal studies*. The test substance shall be applied and kept on the skin for a minimum of 6 hours. The covering apparatus components shall be assayed to recover residual radioactivity. At the termination of the studies, each animal shall be sacrificed and the exposed skin area removed. An appropriate section of the skin shall be solubilized and assayed for radioactivity to ascertain whether the skin acts as a reservoir for the test substance.

(*1*) Group D shall be given one dermal, low dose of the radiolabeled test substance.

(*2*) Group E shall be given one dermal, high dose of the radiolabeled test substance.

(D) *Repeated dosing study*. Group F shall receive a series of single daily 6–hour inhalation exposures to unlabeled test substance at the low dose over a period of at least 7 days. A single 6–hour inhalation exposure to the radiolabeled test substance at the low dose shall be administered 24 hours after the last unlabeled exposure. Following administration of the radiolabeled substance, the rats shall be placed in individual metabolic units and excreta collected. The study shall be terminated 7 days after the last exposure, or after at least 90 percent of the radioactivity has been recovered in the excreta, whichever occurs first.

(3) *Types of studies*—(i) *Pharmacokinetics studies*. Groups A through F shall be used to determine the kinetics of absorption of the test substance. In animal subjects administered the test substance intravenously (i.e., Group A), the concentration of test substance in blood and excreta shall be measured following administration. In animal subjects administered the test substance by the inhalation and dermal routes (i.e., Groups B through F), the concentration of test substance in blood shall be measured at selected time intervals during and following the exposure period. In animal subjects administered the test substance by the inhalation route (i.e., Groups B, C, and F) the concentration of test substance in excreta shall be measured following exposure. In animal subjects administered the test substance by the dermal route (i.e., Groups D and E) the concentration of test substance in excreta shall be measured during and following exposure. These measurements allow calculation of uptake, half lives, and clearance. In addition, in the groups administered the test substance by inhalation (i.e., Groups B, C, and F), the concentration of test substance in the exposure chamber air shall be measured at selected time intervals during the exposure period.

(ii) *Metabolism studies*. Groups A through F shall be used to determine the metabolism of the test substance. Excreta (urine, feces, and expired air) shall be collected for identification and measurement of the quantities of test substance and metabolites.

(4) *Measurements*—(i) *Pharmacokinetics*. At least four animals from each group shall be used for these purposes.

(A) *Bioavailability*. The levels of test substance and relevant metabolites, as appropriate, shall be determined in whole blood, blood plasma or blood serum at appropriate intervals after initiation of intravenous, dermal, and inhalation exposure. The sampling intervals should be compatible with the exposure route under study. The determinations need only be done on animals administered the test substance containing ^{14}C-*n*-hexane or, if the analytical sensitivity is equal or greater, unlabeled test substance may be used.

(B) *Extent of absorption*. The total quantities of radioactivity shall be determined for excreta collected daily for 7 days, or until at least 90 percent of theradioactivity has been recovered in the excreta, whichever occurs first.

(C) *Excretion*. The quantities of radioactivity eliminated in the urine, feces,

and expired air shall be determined separately at time intervals that provide accurate measurement of clearance and excretory rates. The collection of carbon dioxide may be discontinued when less than one percent of the dose is found to be exhaled as radioactive carbon dioxide in 24 hours.

(D) *Tissue distribution.* At the termination of each study, the quantities of radioactivity shall be determined in blood and in various tissues, including bone, brain, fat, gastrointestinal tract, gonads, heart, kidney, liver, lungs, muscle, skin, spleen, thymus, and residual carcass of each animal.

(E) *Change in pharmacokinetics.* Results of pharmacokinetics measurements (i.e., biotransformation, extent of absorption, tissue distribution, and excretion) obtained in rats receiving the single inhalation exposure to the low dose of the test substance (Group B) shall be compared to the corresponding results obtained in rats receiving repeated inhalation exposures to the low dose of the test substance (Group F).

(ii) *Metabolism.* At least four animals from each group shall be used for these purposes.

(A) *Biotransformation.* Appropriate qualitative and quantitative methods shall be used to assay urine, feces, and expired air collected from rats. Efforts shall be made to identify any metabolite which comprises 5 percent or more of the dose administered.

(B) *Changes in biotransformation.* Appropriate qualitative and quantitative assay methods shall be used to compare the composition of radioactive compounds in excreta from rats receiving a single inhalation exposure (Groups B and C) with that from rats receiving repeated inhalation exposures (Group F).

(d) *Data and reporting.* The final test report shall include the following:

(1) *Presentation of results.* Numerical data shall be summarized in tabular form. Pharmacokinetics data shall also be presented in graphical form. Qualitative observations shall also be reported.

(2) *Evaluation of results.* All data shall be evaluated by appropriate statistical methods.

(3) *Reporting results.* In addition to the reporting requirements as specified in 40 CFR part 792, the following information shall be reported.

(i) Strain of laboratory animals.

(ii) Chemical characterization of the test substances, including:

(A) For the radiolabeled test substances, information on the sites and degree of radiolabeling, including type of label, specific activity, chemical purity prior to mixing with the unlabeled hexane mixture, and radiochemical purity.

(B) For the unlabeled test substance, information on lot number and the percentage of MCP and *n*-hexane.

(C) Results of chromatography.

(iii) A full description of the sensitivity, precision, and accuracy of all procedures used to obtain the data.

(iv) Percent and rate of absorption of the test substance after inhalation and dermal exposures.

(v) Quantity and percent recovery of radioactivity in feces, urine, expired air, and blood. For dermal studies, include recovery data for skin and residual radioactivity in the covering apparatus.

(vi) Tissue distribution reported as quantity of radioactivity in blood, in various tissues including bone, brain, fat, gastrointestinal tract, gonads, heart, kidney, liver, lung, muscle, skin, spleen, thymus, and in residual carcass.

(vii) Biotransformation pathways, to the extent possible, and quantities of the test substances and metabolites in excreta collected after administering single high and low doses.

(viii) Biotransformation pathways, to the extent possible, and quantities of test substances and metabolites in excreta collected after administering repeated low doses.

(ix) Pharmacokinetics models to the extent they can be developed from the experimental data.

[55 FR 632, Jan. 8, 1990, as amended at 58 FR 34205, June 23, 1993; 60 FR 34466, July 3, 1995]

§ 795.250 Developmental neurotoxicity screen.

(a) *Purpose.* In the assessment and evaluation of the toxic characteristics of a chemical, it is important to determine when acceptable exposures in the

adult may not be acceptable to a developing organism. This test is designed to provide information on the potential functional and morphologic hazards to the nervous system which may arise in the offspring from exposure of the mother during pregnancy and lactation.

(b) *Principle of the test method.* The test substance is administered to several groups of pregnant animals during gestation and lactation, one dose level being used per group. Offspring are randomly selected from within litters for neurotoxicity evaluation. The evaluation includes observation to detect gross neurological and behavioral abnormalities, determination of motor activity, neuropathological evaluation, and brain weights. Measurements are carried out periodically during both postnatal development and adulthood.

(c) *Test procedures*—(1) *Animal selection*—(i) *Species and strain.* Testing should be performed in the Sprague Dawley rat.

(ii) *Age.* Young adult animals (nulliparous females) shall be used.

(iii) *Sex.* Pregnant females shall be used at each dose level.

(iv) *Number of animals.* The objective is for a sufficient number of pregnant rats to be exposed to ensure that an adequate number of offspring are produced for neurotoxicity evaluation. At least 20 litters are recommended at each dose level. This number assumes a coefficient of variation of 20 to 25 percent for most behavioral tests. If, based upon experience with historical control data or data for positive controls in a given laboratory, the coefficient of variation for a given task is higher than 20 to 25 percent, then calculation of appropriate sample sizes to detect a 20 percent change from control values with 80 percent power would need to be done. For most designs, calculations can be made according to Dixon and Massey (1957) under paragraph (e)(5) of this section, Neter and Wasserman (1974) under paragraph (e)(10) of this section, Sokal and Rohlf (1969) under paragraph (e)(11) of this section, or Jensen (1972) under paragraph (e)(8) of this section.

(A) On day 4 after birth, the size of each litter should be adjusted by eliminating extra pups by random selection to yield, as nearly as possible, 4 males and 4 females per litter. Whenever the number of male or female pups prevents having 4 of each sex per litter, partial adjustment (for example, 5 males and 3 females) is permitted. Adjustments are not appropriate for litters of less than 8 pups. Elimination of runts only is not appropriate. Individual pups should be identified uniquely after standardization of litters. A method that may be used can be found in Adams et al. (1985) under paragraph (e)(1) of this section.

(B) After standardization of litters, males and females shall be randomly assigned to one of each of three behavioral tasks. Alternatively, more than one of the behavioral tasks may be conducted in the same animal. In the latter case, a minimum of 1 to 2 days should separate the tests when conducted at about the same age.

(C) One male and one female shall be randomly selected from each litter for sacrifice at weaning as specified in paragraph (c)(8) of this section.

(2) *Control group.* A concurrent control group shall be used. This group shall be a sham treated group, or, if a vehicle is used in administering the test substance, a vehicle control group. Animals in the control groups shall be handled in an identical manner to test group animals. The vehicle shall neither be developmentally toxic nor have effects on reproduction.

(3) *Dose levels and dose selection.* (i) At least 3 dose levels plus a control (vehicle control, if a vehicle is used) shall be used.

(ii) If the substance has been shown to be developmentally toxic either in a standard developmental toxicity study or a pilot study, the highest dose level shall be the maximum dose which will not induce *in utero* or neonatal deaths or malformations sufficient to preclude a meaningful evaluation of neurotoxicity.

(iii) In the absence of standard developmental toxicity, unless limited by the physicochemical nature or biologicial properties of the substance, the highest dose level shall induce some overt maternal toxicity but shall not result in a reduction in weight gain exceeding 20 percent during gestation and lactation.

(iv) The lowest dose should not produce any grossly observable evidence of either maternal or developmental neurotoxicity.

(v) The intermediate dose(s) shall be equally spaced between the highest and lowest dose.

(4) *Dosing period.* Day 0 in the test is the day on which a vaginal plug and/or sperm are observed. The dose period shall cover the period from day 6 of gestation through weaning (21 days postnatally).

(5) *Administration of test substance.* The test substance or vehicle should be administered orally by intubation. The test substance shall be administered at the same time each day. The animals shall be weighed periodically and the dosage based on the most recent weight determination.

(6) *Observation of dams.* (i) A gross examination of the dams shall be made at least once each day, before daily treatment. The animals shall be observed by trained technicians who are blind with respect to the animal's treatment, using standardized procedures to maximize inter-observer reliability. Where possible, it is advisable that the same observer be used to evaluate the animals in a given study. If this is not possible, some demonstration of inter-observer reliability is required.

(ii) During the treatment and observation periods, cage-side observations shall include:

(A) Any responses with respect to body position, activity level, coordination of movement, and gait.

(B) Any unusual or bizarre behavior including, but not limited to headflicking, head searching, compulsive biting or licking, self-mutilation, circling, and walking backwards.

(C) The presence of:

(*1*) Convulsions.

(*2*) Tremors.

(*3*) Increased levels of lacrimation and/or red-colored tears.

(*4*) Increased levels of salivation.

(*5*) Piloerection.

(*6*) Pupillary dilation or constriction.

(*7*) Unusual respiration (shallow, labored, dyspneic, gasping, and retching) and/or mouth breathing.

(*8*) Diarrhea.

(*9*) Excessive or diminished urination.

(*10*) Vocalization.

(iii) Signs of toxicity shall be recorded as they are observed, including the time of onset, the degree and duration.

(iv) Animals shall be weighed at least weekly.

(v) The day of delivery of litters shall be recorded.

(7) *Study conduct*—(i) *Observation of offspring.* (A) All offspring shall be examined cage-side daily for gross signs of mortality and morbidity.

(B) All offspring shall be examined outside the cage for gross signs of toxicity whenever they are weighed or removed from their cages for behavioral testing. The offspring shall be observed by trained technicians, who are blind with respect to the animal's treatment using standardized procedures to maximize inter-observer reliability. Where possible, it is advisable that the same observer be used to evaluate the animals in a given study. If this is not possible, some demonstration of inter-observer reliability is required. At a minimum, the end points outlined in paragraph (c)(6)(ii) of this section shall be monitored as appropriate for the developmental stage being observed.

(C) Any gross signs of toxicity in the offspring shall be recorded as they are observed, including the time of onset, the degree, and duration.

(ii) *Developmental landmarks.* Live pups should be counted and litters weighed by weighing each individual pup at birth, or soon thereafter, and on days 4, 7, 13, 17, and 21, and biweekly thereafter. The age of the pups at the time of the appearance of the following developmental landmarks shall be determined:

(A) *Vaginal opening.* General procedure for this determination may be found in Adams et al. (1985) under paragraph (e)(1) of this section.

(B) *Testes descent.* General procedure for this determination may be found in Adams et al. (1985) under paragraph (e)(1) of this section.

(iii) *Motor activity.* (A) Motor activity shall be monitored specifically on days 13, 17, 21, 45 (±2 days), and 60 (±2 days). Motor activity shall be monitored by an automated activity recording apparatus. The device used shall be capable

of detecting both increases and decreases in activity, i.e., baseline activity as measured by the device shall not be so low as to preclude decreases nor so high as to preclude increases. Each device shall be tested by standard procedures to ensure, to the extent possible, reliability of operation across devices and testing of animals within dose groups shall be balanced across devices.

(B) Each animal shall be tested individually. The test session shall be long enough to demonstrate habituation of motor activity in control animals, i.e., to approach asymptotic levels by the last 20 percent of the session. Animals' activity counts shall be collected in equal time periods of no greater than 10 minutes duration. All sessions shall have the same duration. Treatment groups shall be counter-balanced across test times.

(C) Efforts shall be made to ensure that variations in the test conditions are minimal and are not systematically related to treatment. Among the variables which can affect motor activity are sound level, size, and shape of the test cage, temperature, relative humidity, lighting conditions, odors, use of home cage or novel test cage, and environmental distractions.

(D) Additional information on the conduct of a motor activity study may be obtained in the TSCA motor activity guideline, in § 798.6200 of this chapter.

(iv) *Auditory startle test.* An auditory startle habituation test shall be performed on the offspring on days 22 and 60. Details on the conduct of this testing may be obtained in Adams et al. (1985) under paragraph (e)(1) of this section. In performing the auditory startle task, the mean response amplitude on each block of 10 trials (5 blocks of 10 trials per session on each day of testing) shall be made. While use of prepulse inhibition is not a requirement, it may be used at the discretion of the investigator. Details on the conduct of this testing may be obtained from Ison (1984) under paragraph (e)(7) of this section.

(v) *Active avoidance test.* Active avoidance testing shall be conducted beginning at 60 to 61 days of age. Details on the apparatus may be obtained in Brush and Knaff (1959) and on the conduct of testing from Brush (1962), under paragraphs (e)(2) and (e)(4) of this section, respectively; reviews on active avoidance conditioning by Brush (1971) and McAllister and McAllister (1971) can be found under paragraphs (e)(3) and (e)(9) of this section, respectively. In performing the active avoidance task, the following measures should be made:

(A) Mean number of shuttles during the adaptation period preceding each daily session.

(B) Mean number and latency of avoidances per session, presented in blocks of 10 trials (2 blocks of 10 trials per session across 5 sessions).

(C) Mean number and latency of escapes per session, presented in blocks of 10 trials as above.

(D) Mean duration of shocks per session, presented in blocks of 10 trials as above.

(E) Mean number of shuttles during the inter-trial intervals.

(8) *Post-mortem evaluation*—(i) *Age of animals.* One male and one female per litter shall be sacrificed at weaning and the remainder following the last behavioral measures. Neuropathology and brain weight determinations shall be made on animals sacrificed at weaning and after the last behavioral measures.

(ii) *Neuropathology.* Details for the conduct of neuropathology evaluation may be obtained in the TSCA neuropathology guideline, in § 798.6400 of this chapter. At least 6 offspring per dose group shall be randomly selected from each sacrificed group (weaning and adulthood) for neuropathologic evaluation. These animals shall be balanced across litters, and equal numbers of males and females shall be used. The remaining sacrificed animals shall be used to determine brain weight. Animals shall be perfused *in situ* by a generally recognized technique. After perfusion, the brain and spinal cord shall be removed and gross abnormalities noted. Cross-sections of the following areas shall be examined: The forebrain, the center of the cerebrum and midbrain, the cerebellum and pons, and the medulla oblongata; the spinal cord at cervical and lumbar swelling; Gasserian ganglia, dorsal root ganglia,

dorsal and ventral root fibers, proximal sciatic nerve (mid-thigh and sciatic notch), sural nerve (at knee), and tibial nerve (at knee). Tissue samples from both the central and peripheral nervous system shall be further immersion-fixed and stored in appropriate fixative for further examination. After dehydration, tissue specimens shall be cleared with xylene and embedded in paraffin or paraplast except for the sural nerve which should be embedded in plastic. A method for plastic embedding is described by Spencer et al. under paragraph (e)(12) of this section. Tissue sections shall be prepared from the tissue blocks. The following general testing sequence is recommended for gathering histopathological data:

(A) *General staining.* A general staining procedure shall be performed on all tissue specimens in the highest treatment group. Hematoxylin and eosin (H&E) shall be used for this purpose. The staining shall be differentiated properly to achieve bluish nuclei with pinkish background.

(B) *Special stains.* Based on the results of the general staining, selected sites and cellular components shall be further evaluated by use of specific techniques. If H&E screening does not provide such information, a battery of stains shall be used to assess the following components in all appropriate required samples: Neuronal body (e.g., Einarson's gallocyanin), axon (e.g., Kluver's Luxol Fast Blue), and neurofibrils (e.g., Bielchosky). In addition, nerve fiber teasing shall be used. A section of normal tissue shall be included in each staining to assure that adequate staining has occurred. Any changes shall be noted and representative photographs shall be taken. If lesions are observed, the special techniques shall be repeated in the next lower treatment group until no further lesions are detectable.

(C) *Alternative technique.* If the anatomical locus of expected neuropathology is well-defined, epoxy-embedded sections stained with toluidine blue may be used for small sized tissue samples. This technique obviates the need for special stains.

(iii) *Brain weight.* At least 10 animals that are not sacrificed for histopathology shall be used to determine brain weight. The animals shall be decapitated and the brains carefully removed, blotted, chilled, and weighed. The following dissection shall be performed on an ice-cooled glass plate: First, the rhombencephalon is separated by a transverse section from the rest of the brain and dissected into the cerebellum and the medulla oblongata/pons. A transverse section is made at the level of the ''optic chiasma'' which delimits the anterior part of the hypothalamus and passes through the anterior commissure. The cortex is peeled from the posterior section and added to the anterior section. This divides the brain into four sections, the telencephalon, the diencephalon/midbrain, the medulla oblongata/pons, and the cerebellum. Sections shall be weighed as soon as possible after dissection to avoid drying. Detailed methodology is available in Glowinski and Iversen (1966) under paragraph (e)(6) of this section.

(d) *Data reporting and evaluation.* In addition to the reporting requirements specified in part 792, subpart J of this chapter, the final test report shall include the following information.

(1) *Description of system and test methods.* (i) A detailed description of the procedures used to standardize observation and operational definitions for scoring observations.

(ii) Positive control data from the laboratory performing the test that demonstrate the sensitivity of the procedures being used. These data do not have to be from studies using prenatal exposures. However, the laboratory must demonstrate competence in testing neonatal animals perinatally exposed to chemicals and establish test norms for the appropriate age group.

(iii) Procedures for calibrating and assuring the equivalence of devices and balancing treatment groups.

(iv) A short justification explaining any decisions where professional judgement is involved such as fixation technique and choice of stains.

(2) *Results.* The following information shall be arranged by test group dose level.

(i) In tabular form, data for each animal shall be provided showing:

(A) Its identification number and litter from which it came.

(B) Its body weight and score on each developmental landmark at each observation time; total session activity counts and intrasession subtotals on each day measured; auditory startle response magnitude session counts and intrasession subtotals on each day measured; avoidance session counts and intrasession counts on each day measured; time and cause of death (if appropriate); locations, nature or frequency, and severity of the lesions; total brain weight; absolute weight of each of the four sections; and weight of each section as a percentage of total brain weight. A commonly used scale such as 1+, 2+, 3+, and 4+ for degree of severity of lesions ranging from very slight to extensive may be used for morphologic evaluation. Any diagnoses derived from neurologic signs and lesions, including naturally occurring diseases or conditions, shall also be recorded.

(ii) Summary data for each group shall include:

(A) The number of animals at the start of the test.

(B) Body weights of the dams during gestation and lactation.

(C) Litter size and mean weight at birth.

(D) The number of animals showing each observation score at each observation time.

(E) The percentage of animals showing each abnormal sign at each observation time.

(F) The mean and standard deviation for each continuous end point at each observation time. These will include body weight, motor activity counts, acoustic startle responses, performance in active avoidance tests, and brain weights (both absolute and relative).

(G) The number of animals in which any lesion was found.

(H) The number of animals affected by each different type of lesion, the average grade of each type of lesion, and the frequency of each different type and/or location of lesions.

(3) *Evaluation of data.* An evaluation of the test results shall be made. The evaluation shall include the relationship between the doses of the test substance and the presence or absence, incidence, and severity of any neurotoxic effect. The evaluation shall include appropriate statistical analyses. The choice of analyses shall consider tests appropriate to the experimental design and needed adjustments for multiple comparisons.

(e) *References.* For additional background information on this test guideline, the following references should be consulted:

(1) Adams, J., Buelke-Sam, J., Kimmel, C.A., Nelson, C.J., Reiter, L.W., Sobotka, T.J., Tilson, H.A., and Nelson, B.K. ''Collaborative behavioral teratology study: Protocol design and testing procedure.'' *Neurobehavioral Toxicology and Teratology*. 7: 579–586. (1985).

(2) Brush, F.R. ''The effects of inter-trial interval on avoidance learning in the rat.'' *Journal of Comparative Physiology and Psychology*. 55: 888–892. (1962).

(3) Brush, F.R. ''Retention of aversively motivated behavior.'' In: ''Adverse Conditioning and Learning.'' Brush, F.R., ed., New York: Academic Press. (1971).

(4) Brush, F.R. and Knaff, P.R. ''A device for detecting and controlling automatic programming of avoidance-conditioning in a shuttle-box.'' *American Journal of Psychology*. 72: 275–278 (1959).

(5) Dixon, W.J. and Massey, E.J. ''Introduction to Statistical Analysis.'' 2nd ed. New York: McGraw-Hill. (1957).

(6) Glowinski, J. and Iversen, L.L. ''Regional studies of catecholamines in the rat brain-I.'' *Journal of Neurochemistry*. 13: 655–669. (1966).

(7) Ison, J.R. ''Reflex modification as an objective test for sensory processing following toxicant exposure.'' *Neurobehavioral Toxicology and Teratology*. 6: 437–445. (1984).

(8) Jensen, D.R. ''Some simultaneous multivariate procedures using Hotelling's T2 Statistics.'' *Biometrics*. 28: 39–53. (1972).

(9) McAllister, W.R. and McAllister, D.E. ''Behavioral measurement of conditioned fear.'' In: ''Adverse Conditioning and Learning.'' Brush, F.R., ed., New York: Academic Press (1971).

(10) Neter, J. and Wasserman, W. ''Applied Linear Statistical Models.'' Homewood: Richard D. Irwin, Inc. (1974).

(11) Sokal, R.P. and Rohlf, E.J. ''Biometry.'' San Francisco: W.H. Freeman and Co. (1969).

(12) Spencer, P.S., Bischoff, M.C., and Schaumburg, H.H., ''Neuropathological methods for the detection of neurotoxic disease.'' In: ''Experimental and Clinical Neurotoxicology.'' Spencer, P.S. and Schaumburg, H.H., eds., Baltimore, MD: Williams & Wilkins, pp. 743–757. (1980).

[53 FR 5957, Feb. 26, 1988]

PART 796—CHEMICAL FATE TESTING GUIDELINES

Subpart A [Reserved]

Subpart B—Physical and Chemical Properties

Sec.
796.1050 Absorption in aqueous solution: Ultraviolet/visible spectra.
796.1950 Vapor pressure.

Subpart C—Transport Processes

796.2750 Sediment and soil adsorption isotherm.

Subpart D—Transformation Processes

796.3100 Aerobic aquatic biodegradation.
796.3500 Hydrolysis as a function of pH at 25 °C.

AUTHORITY: 15 U.S.C. 2603.

Subpart A [Reserved]

Subpart B—Physical and Chemical Properties

§ 796.1050 Absorption in aqueous solution: Ultraviolet/visible spectra.

(a) *Introductory information*—(1) *Guidance information.* (i) Molecular formula.

(ii) Structural formula.

(2) *Standard documents.* The spectrophotometric method is based on national standards and consensus methods which are applied to measure the absorption spectra.

(b) *Method*—(1)(i) *Introduction, purpose, scope, relevance, application and limits of test.* (A) The primary environmental purpose in determining the ultraviolet-visible (UV–VIS) absorption spectrum of a chemical compound is to have some indication of the wavelengths at which the compounds may be susceptible to photochemical degradation. Since photochemical degradation is likely to occur in both the atmosphere and the aquatic environment, spectra appropriate to these media will be informative concerning the need for further persistence testing.

(B) Degradation will depend upon the total energy absorbed in specific wavelength regions. Such energy absorption is characterized by both molar absorption coefficient (molar extinction coefficient) and band width. However, the absence of measurable absorption does not preclude the possibility of photodegradation.

(ii) *Definitions and units.* The *UV–VIS absorption spectrum* of a solution is a function of the concentration, c_1, expressed in mol/L, of all absorbing species present; the path length, d, of the spectrophotometer cell, expressed in cm; and the molar absorption (extinction) coefficient, ε_i, of each species. The absorbance (optical density) A of the solution is then given by:

$$A = d\sum_i \varepsilon_{ici}$$

For a resolvable absorbance peak, the band width λ is the wavelength range, expressed in nm=10^{-9} m, of the peak at half the absorbance maximum.

(iii) *Reference substances.* (A) The reference substances need not be employed in all cases when investigating a new substance. They are provided primarily so that calibration of the method may be performed from time to time and to offer the chance to compare the results when another method is applied.

(B) Reference compounds appropriate for the calibration of the system are:

(*1*) Potassium dichromate (in 0.005 mol/L, H_2SO_4 solution) from J.A.A. Ketelaar, paragraph (d)(2) of this section:

log ε	3.56	3.63	3.16	3.50	
λ in nm	235	257	313	350	

(*2*) Fluoranthene (in methanol) from *C.R.C. Atlas of Spectral Data,* paragraph (d)(3) of this section:

log ε	4.75	4.18	4.73	3.91	3.92
λ in nm	237	236	288	339	357

(*3*) 4-nitrophenol (in methanol) from *C.R.C. Atlas of Spectral Data,* paragraph (d)(3) of this section:

log ε	3.88	4.04
λ in nm	288	311

See also paragraph (d)(1) of this section.

(iv) *Principle of the test method.* This method utilizes a double-beam spectrophotometer which records only the absorption differences between the blank and test solutions to give the spectrum of the chemical being tested.

(v) *Quality criteria—Reproducibility and sensitivity.* (A) Reproducibility and sensitivity, need not be measured directly. Instead, the accuracy of the system in measuring the spectra of reference compounds will be defined so as to assure appropriate reproducibility and sensitivity. It is preferable to use a recording double-beam spectrophotometer to obtain the UV–VIS spectrum of the test compound. Such an instrument should have a photometric accuracy of ±0.02 units over the absorbance range of 0 to 2 units. It should be capable of recording absorbances at wavelengths of 200 to 750 nanometers nm with a wavelength accuracy of ±0.5 nm. The cells employed with the instrument must necessarily be transparent over this wavelength range and must have a path length determined to within 1 percent. To ensure that the instrument is performing satisfactorily, spectra for test solutions of $K_2Cr_2O_7$ (for absorbance accuracy) and holmium glass (for wavelength accuracy) should be run periodically.

(B) In the event that a recording double-beam instrument is not available, it will be necessary to determine the absorbance of the test solution in a single-beam instrument at 5-nm intervals over the entire wavelength range and at 1-nm intervals where there are indicated absorbance maxima. Wavelength and absorbance tests should be done as with the double-beam instrument.

(2) *Description of the test procedure*—(i) *Preparation*—(A) *Preparation of test solutions. (1)* Solutions should be prepared by accurately weighing an appropriate amount of the purest form of the test substance available. This should be made up in a concentration which will result in at least one absorbance maximum in the range 0.5 to 1.5 units.

(*2*) The absorption of a compound is due to its particular chemical form. It is often the case that different forms are present, depending on whether the medium is acidic, basic, or neutral. Consequently, spectra under all three conditions are required where solubility and concentration allow. Where it is not possible to obtain sufficient concentrations in any of the aqueous media, a suitable organic solvent should be used (methanol preferred).

(*3*) The acid medium should have a pH of less than 2, and the basic medium should be at least pH 10. The solvent for the neutral solution, and for preparing the acidic and basic ones, should be distilled water, transparent to ultraviolet radiation down to 200 nm. If methanol must be used, acidic and basic solutions can be prepared by adding 10 percent by volume of HCl or NaOH in aqueous solution ([HCl], [NaOH]=1 mol/L).

(*4*) In theory, all chemical species other than that being tested are present in both beams and would therefore not appear in the recorded spectrum of a double-beam instrument. In practice, because the solvent is usually present in great excess, there is a threshold value of wavelength below which it is not possible to record the spectrum of the test chemical. Such a wavelength will be a property of the solvent or of the test medium. In general, distilled water is useful from 200 nm (dissolved ions will often increase this), methanol from 210 nm, hexane from 210 nm, acetonitrile from 215 nm and dichloromethane from 235 nm.

(B) *Blank solutions.* A blank must be prepared which contains the solvent and all chemical species other than the test chemical. The absorption spectrum of this solution should be recorded in a manner identical to that of the test solution and preferably on the same chart. This ''baseline'' spectrum should never record an absorbance reading varying more than ±0.05 from the nominal zero value.

(C) *Cells.* Cell pathlengths are usually between 0.1 cm and 10 cm. Cell lengths should be selected to permit recording of at least one maximum in the absorbance range of 0.5 to 1.5 units. Which set of cells should be used will be governed by the concentration and the absorbance of the test solution as indicated by the Beer-Lambert Law. The cells should be transparent over the range of the spectrum being recorded, and the path-lengths should be known to an accuracy of at least 1 per cent. Cells should be thoroughly cleaned in an appropriate manner (chromic acid is useful for quartz cells) and rinsed several times with the test or blank solutions.

(ii) *Performance of the test.* Both cells to be employed should be rinsed with

the blank solution and then filled with same. The instrument should be set to scan at a rate appropriate for the required wavelength resolution and the spectrum of the blank recorded. The sample cell should then be rinsed and filled with the test solution and the scanning repeated, preferably on the same spectrum chart, to display the baseline. The test should be carried out at 25 °C.

(c) *Data and reporting*—(1) *Treatment of results.* (i) The molar absorption coefficient ε should be calculated for all absorbance maxima of the test substance. The formula for this calculation is:

$$\varepsilon = \frac{A}{c_{,i} \times d},$$

where the quantities are as defined above (see Definitions and units).

(ii) For each peak which is capable of being resolved, either as recorded or by extrapolated symmetrical peaks, the bandwidth should be recorded.

(2) *Test report.* (i) The report should contain a copy of each of the three spectra (3 pH conditions). If neither water nor methanol solutions are feasible, there will be only one spectrum. Spectra should include a readable wave-length scale. Each spectrum should be clearly marked with the test conditions.

(ii) For each maximum in each spectrum, the ε value and bandwidth (when applicable) should be calculated and reported, along with the wavelength of the maximum. This should be presented in tabular form.

(iii) The various test conditions should be included, such as scan speed, the name and model of the spectrophotom-eter, the slit width (where available), cell type and path length, the concentrations of the test substance, and the nature and acidity of the solvent medium. A recent test spectrum on appropriate reference materials for photometric and wavelength accuracy should also be submitted (see Reproducibility and sensitivity).

(d) *Literature references.* For additional background information on this test guideline, the following references should be consulted:

(1) Milazzo, G., Caroli, S., Palumbo-Doretti, M., Violante, N., *Analytical Chemistry,* 49: 711 (1977).

(2) Katelaar, J.A.A., *Photoelectric Spectrometry Group Bulletin,* 8, (Cambridge, 1955).

(3) Chemical Rubber Company, *Atlas of Spectral Data,* (Cliffland, Ohio).

[50 FR 39472, Sept. 27, 1985]

§ 796.1950 Vapor pressure.

(a) *Introduction*—(1) *Background and purpose.* (i) Volatilization, the evaporative loss of a chemical, depends upon the vapor pressure of chemical and on environmental conditions which influence diffusion from a surface. Volatilization is an important source of material for airborne transport and may lead to the distribution of a chemical over wide areas and into bodies of water far from the site of release. Vapor pressure values provide indications of the tendency of pure substances to vaporize in an unperturbed situation, and thus provide a method for ranking the relative volatilities of chemicals. Vapor pressure data combined with water solubility data permit the calculation of Henry's law constant, a parameter essential to the calculation of volatility from water.

(ii) Chemicals with relatively low vapor pressures, high adsorptivity onto solids, or high solubility in water are less likely to vaporize and become airborne than chemicals with high vapor pressures or with low water solubility or low adsorptivity to solids and sediments. In addition, chemicals that are likely to be gases at ambient temperatures and which have low water solubility and low adsorptive tendencies are less likely to transport and persist in soils and water. Such chemicals are less likely to biodegrade or hydrolyze and are prime candidates for atmospheric oxidation and photolysis (e.g., smog formation or stratospheric alterations). On the other hand, nonvolatile chemicals are less frequently involved in atmosphere transport, so that concerns regarding them should focus on soils and water.

(iii) Vapor pressure data are an important consideration in the design of other chemical fate and effects tests;

for example, in preventing or accounting for the loss of violatile chemicals during the course of the test.

(2) *Definitions and units.* (i) ''Desorption efficiency'' of a particular compound applied to a sorbent and subsequently extracted with a solvent is the weight of the compound which can be recovered from the sorbent divided by the weight of the compound originally sorbed.

(ii) ''Pascal'' (Pa) is the standard international unit of vapor pressure and is defined as newtons per square meter (N/m^2). A newton is the force necessary to give acceleration of one meter per second squared to one kilogram of mass.

(iii) The ''torr'' is a unit of pressure which equals 133.3 pascals or 1 mm Hg at 0 °C.

(iv) ''Vapor pressure'' is the pressure at which a liquid or solid is in equilibrium with its vapor at a given temperature.

(v) ''Volatilization'' is the loss of a substance to the air from a surface or from solution by evaporation.

(3) *Principle of the test methods.* (i) The isoteniscope procedure uses a standardized technique [ASTM 1978] that was developed to measure the vapor pressure of certain liquid hydrocarbons. The sample is purified within the equipment by removing dissolved and entrained gases until the measured vapor pressure is constant, a process called ''degassing.'' Impurities more volatile than the sample will tend to increase the observed vapor pressure and thus must be minimized or removed. Results are subject to only slight error for samples containing nonvolatile impurities.

(ii) Gas saturation (or transpiration) procedures use a current of inert gas passed through or over the test material slowly enough to ensure saturation and subsequent analysis of either the loss of material or the amount (and sometimes kind) of vapor generated. Gas saturation procedures have been described by Spencer and Cliath (1969) under paragraph (d)(2) of this section. Results are easy to obtain and can be quite precise. The same procedures also can be used to study volatilization from laboratory scale environmental simulations. Vapor pressure is computed on the assumption that the total pressure of a mixture of gases is equal to the sum of the pressures of the separate or component gases and that the ideal gas law is obeyed. The partial pressure of the vapor under study can be calculated from the total gas volume and the weight of the material vaporized. If v is the volume which contains w grams of the vaporized material having a molecular weight M, and if p is the pressure of the vapor in equilibrium at temperature T (K), then the vapor pressure, p, of the sample is calculated by

$$p=(w/M)(RT/v),$$

where R is the gas constant (8.31 Pa m^2 mol^{-1} K^{-1}) when the pressure is in pascals (Pa) and the volume is in cubic meters. As noted by Spencer and Cliath (1970) under paragraph (d)(3) of this section, direct vapor pressure measurements by gas saturation techniques are more directly related to the volatilization of chemicals than are other techniques.

(iii) In an effort to improve upon the procedure described by Spencer and Cliath (1969) under paragraph (d)(2) of this section, and to determine the applicability of the gas saturation method to a wide variety of chemical types and structures, EPA has sponsored research and development work at SRI International (EPA 1982) under paragraph (d)(1) of this section. The procedures described in this Test Guideline are those developed under that contract and have been evaluated with a wide variety of chemicals of differing structure and vapor pressures.

(4) *Applicability and specificity.* (i) A procedure for measuring the vapor pressure of materials released to the environment ideally would cover a wide range of vapor pressure values, at ambient temperatures. No single procedure can cover this range, so two different procedures are described in this section, each suited for a different part of the range. The isoteniscope procedure is for pure liquids with vapor pressures from 0.1 to 100 kPa. For vapor pressures of 10^{-5} to 10^{3} Pa, a gas saturation procedure is to be used.

(ii) With respect to the isoteniscope method, if compounds that boil close to

or form azeotropes with the test material are present, it is necessary to remove the interfering compounds and use pure test material. Impurities more volatile than the sample will tend to increase the observed vapor pressure above its true value but the purification steps will tend to remove these impurities. Soluble, nonvolatile impurities will decrease the apparent vapor pressure. However, because the isoteniscope procedure is a static, fixed-volume method in which an insignificant fraction of the liquid sample is vaporized, it is subject to only slight error for samples containing nonvolatile impurities. That is, the nonvolatile impurities will not be concentrated due to vaporization of the sample.

(iii) The gas saturation method is applicable to solid or liquid chemicals. Since the vapor pressure measurements are made at ambient temperatures, the need to extrapolate data from high temperatures is not necessary and high temperature extrapolation, which can often cause serious errors, is avoided. The method is most reliable for vapor pressures below 10^3 Pa. Above this limit, the vapor pressures are generally overestimated, probably due to aerosol formation. Finally, the gas saturation method is applicable to the determination of the vapor pressure of impure materials.

(b) *Test procedures*—(1) *Test conditions.* (i) The apparatus in the isoteniscope method is described in paragraph (b)(2)(i) of this section.

(ii) The apparatus used in the gas saturation method is described in paragraph (b)(2)(ii) of this section.

(2) *Performance of the tests*—(i) *Isoteniscope Procedure.* The isoteniscope procedure described as ANSI/ASTM Method D 2879–86 is applicable for the measurement of vapor pressures of liquids with vapor pressures of 0.1 to 100 kilopascals (kPa) (0.75 to 750 torr). ASTM D 2879–86 is available for inspection at the Office of the Federal Register, 800 North Capitol Street, NW., suite 700, Washington, DC. This incorporation by reference was approved by the Director of the Office of the Federal Register. This material is incorporated as it exists on the date of approval and a notice of any change in this material will be published in the FEDERAL REGISTER. Copies of the incorporated material may be obtained from the Non-Confidential Information Center (NCIC) (7407), Office of Pollution Prevention and Toxics, U.S. Environmental Protection Agency, Room B–607 NEM, 401 M St., SW., Washington, DC 20460, between the hours of 12 p.m. and 4 p.m. weekdays excluding legal holidays, or from the American Society for Testing and Materials (ASTM), 1916 Race Street, Philadelphia, PA 19103. The isoteniscope method involves placing liquid sample in a thermostated bulb (the isoteniscope) connected to a manometer and a vacuum pump. Dissolved and entrained gases are removed from the sample in the isoteniscope by degassing the sample at reduced presssure. The vapor pressure of the sample at selected temperatures is determined by balancing the pressure due to the vapor of the sample against a known pressure of an inert gas. The vapor pressure of the test compound is determined in triplicate at 25±0.5 °C and at any other suitable temperatures (±0.5°). It is important that additional vapor pressure measurements be made at other temperatures, as necessary, to assure that there is no need for further degassing, as described in the ASTM method.

(ii) *Gas saturation procedure.* (A) The test procedures require the use of a constant-temperature box as depicted in the following Figure 1.

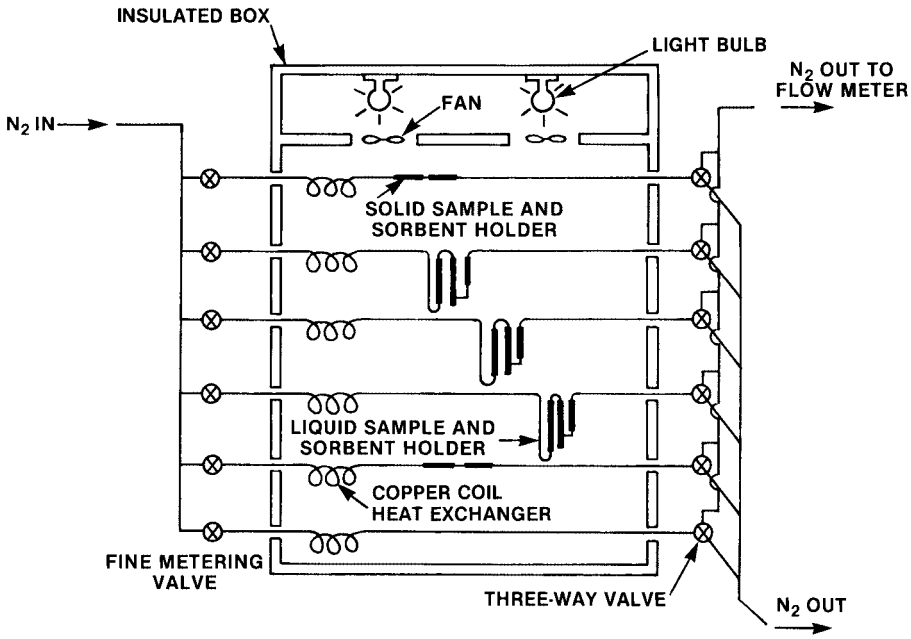

FIGURE 1—SCHEMATIC DIAGRAM OF VAPOR SATURATION APPARATUS

The insulated box, containing sample holders, may be of any suitable size and shape. The sketch in Figure 1 shows a box containing three solid sample holders and three liquid sample holders, which allows for the triplicate analysis of either a solid or liquid sample. The temperature within the box is controlled to ±0.5° or better. Nitrogen gas, split into six streams and controlled by fine needle valves (approximately 0.79 mm orifice), flows into the box via 3.8 mm (0.125 in.) i.d. copper tubing. After temperature equilibration, the gas flows through the sample and the sorbent trap and exits from the box. The flow rate of the effluent carrier gas is measured at room temperature with a bubble flow meter or other suitable device. The flow rate is checked frequently during the experiment to assure that there is an accurate value for the total volume of carrier gas. The flow rate is used to calculate the total volume (at room temperature) of gas that has passed through the sample and sorbent [(vol/time) × time = volume]. The vapor pressure of the test substance can be calculated from the total gas volume and the mass of sample vaporized. If v is the volume of gas that transported mass w of the vaporized test material having a molecular weight M, and if p is the equilibrium vapor pressure of the sample at temperature T, then p is calculated by the equation

$$p=(w/M)(RT/v).$$

In this equation, R is the gas constant (8.31 Pa $m^3 mol^{-1} K^{-1}$). The pressure is expressed in pascals (Pa), the volume in cubic meters (m^3), mass in grams and T in kelvins (K). T=273.15+t, if t is measured in degrees Celsius (°C).

(B) Solid samples are loaded into 5 mm i.d. glass tubing between glass wool plugs. The following Figure 2 depicts a drawing of a sample holder and absorber system.

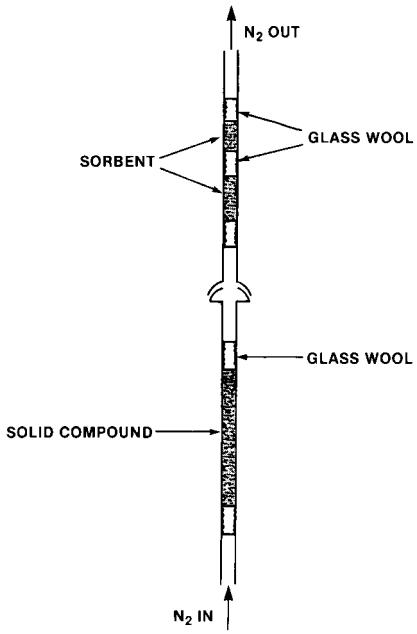

FIGURE 2—SOLID COMPOUND SAMPLING SYSTEM

(C) Liquid samples are contained in a holder as shown in the following Figure 3.

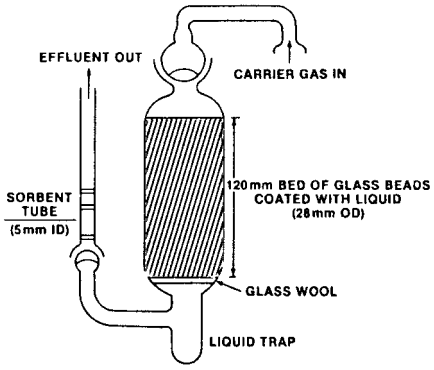

FIGURE 3—LIQUID COMPOUND SAMPLING SYSTEM

The most reproducible method for measuring the vapor pressure of liquids is to coat the liquid on glass beads and to pack the holder in the designated place with these beads.

(D) At very low vapor pressures and sorbent loadings, adsorption of the chemical on the glass wool separating the sample and the sorbent and on the glass surfaces may be a serious problem. Therefore, very low loadings should be avoided whenever possible. Incoming nitrogen gas (containing no interfering impurities) passes through a coarse frit and bubbles through a 38 cm column of liquid sample. The stream passes through a glass wool column to trap aerosols and then through a sorbent tube, as described above. The pressure drop across the glass wool column and the sorbent tube are negligible.

(E) With both solid and liquid samples, at the end of the sampling time, the front and backup sorbent sections are analyzed separately. The compound on each section is desorbed by adding the sorbent from that section to 1.0 ml of desorption solvent in a small vial and allowing the mixture to stand at a suitable temperature until no more test compound desorbs. It is extremely important that the desorption solvent contain no impurities which would interfere with the analytical method of choice. The resulting solutions are analyzed quantitatively by a suitable analytical method to determine the weight of sample desorbed from each section. The choice of the analytical method, sorbent, and desorption solvent is dictated by the nature of the test material. Commonly used sorbents include charcoal, Tenax GC, and XAD–2. Describe in detail the sorbent, desorption solvent, and analytical methods employed.

(F) Measure the desorption efficiency for every combination of sample, sorbent, and solvent used. The desorption efficiency is determined by injecting a known mass of sample onto a sorbent and later desorbing it and analyzing for the mass recovered. For each combination of sample, sorbent, and solvent used, carry out the determination in triplicate at each of three concentrations. Desorption efficiency may vary with the concentration of the actual sample and it is important to measure the efficiency at or near the concentration of sample under gas saturation test procedure conditions.

(G) To assure that the gas is indeed saturated with test compound vapor, sample each compound at three differing gas flow rates. Appropriate flow rates will depend on the test compound and test temperature. If the calculated vapor pressure shows no dependence on flow rate, then the gas is assumed to be saturated.

(c) *Data and reporting.* (1) Report the triplicate calculated vapor pressures for the test material at each temperature, the average calculated vapor pressure at each temperature, and the standard deviation.

(2) Provide a description of analytical methods used to analyze for the test material and all analytical results.

(3) For the isoteniscope procedure, include the plot of p vs. the reciprocal of the temperature in K, developed during the degasing step and showing linearity in the region of 298.15 K (25°C) and any other required test temperatures.

(4) For the gas saturation procedure, include the data on the calculation of vapor pressure at three or more gas flow rates at each test temperature, showing no dependence on flow rate. Include a description of sorbents and solvents employed and the desorption efficiency calculations.

(5) Provide a description of any difficulties experienced or any other pertinent information.

(d) *References.* For additional background information on this test guideline the following references should be consulted:

(1) U.S. Environmental Protection Agency. *Evaluation of Gas Saturation Methods to Measure Vapor Pressures: Final Report,* EPA Contract No. 68–01–5117 with SRI International, Menlo Park, California (1982).

(2) Spencer, W.F. and Cliath, M.M. ''Vapor Density of Dieldrin,'' *Journal of Agricultural and Food Chemistry,* 3:664–670 (1969).

(3) Spencer, W.F. and Cliath, M.M. ''Vapor Density and Apparent Vapor Pressure of Lindane,'' *Journal of Agricultural and Food Chemistry,* 18:529–530 (1970).

[50 FR 39252, Sept. 27, 1985, as amended at 53 FR 12525, Apr. 15, 1988; 53 FR 21641, June 9, 1988; 60 FR 34466, July 3, 1995]

Subpart C—Transport Processes

§ 796.2750 Sediment and soil adsorption isotherm.

(a) *Introduction*—(1) *Background and purpose.* The adsorption of chemicals to sediments and soils is an important process that affects a chemical's distribution in the environment. If a chemical is adsorbed to soil particles, it will remain on the soil surface and will not reach ground water. If a chemical is not adsorbed, it will leach through the soil profile and may reach ground waters and then surface waters. Similarly, if a chemical adsorbed to sediment, it will accumulate in the bed and suspended load of aquatic systems. If a chemical is not adsorbed to sediment, it will accumulate in the water column of aquatic systems. Information on the adsorption potential is needed under certain circumstances to assess the transport of chemicals in the environment. This section describes procedures that will enable sponsors to determine the adsorption isotherm of a chemical on sediments and soils.

(2) *Definitions and units.* (i) The ''cation exchange capacity'' (CEC) is the sum total of exchangeable cations that a sediment or soil can adsorb. The CEC is expressed in milliequivalents of negative charge per 100 grams (meq/100g) or milliequivalents of negative charge per gram (meq/g) of soil or sediment.

(ii) ''Clay mineral analysis'' is the estimation or determination of the kinds of clay-size minerals and the amount present in a sediment or soil.

(iii) ''Organic matter'' is the organic fraction of the sediment or soil; it includes plant and animal residues at various stages of decomposition, cells and tissues of soil organisms, and substances synthesized by the microbial population.

(iv) ''Particle size analysis'' is the determination of the various amounts of the different particle sizes in a sample (i.e., sand, silt, clay), usually by sedimentation, sieving, micrometry, or combinations of these methods. The names and diameter range commonly used in the United States are:

Name	Diameter range
Very coarse sand	2.0 to 1.0 mm
Coarse sand	1.0 to 0.5 mm
Medium sand	0.5 to 0.25 mm
Fine sand	0.25 to 0.125 mm
Very fine sand	0.125 to 0.062 mm
Silt	0.062 to 0.002 mm
Clay	<0.002 mm

(v) The ''pH'' of a sediment or soil is the negative logarithm to the base ten of the hydrogen ion activity of the sediment or soil suspension. It is usually measured by a suitable sensing electrode coupled with a suitable reference electrode at a 1/1 solid/solution ratio by weight.

(vi) The adsorption ratio, ''K_d,'' is the amount of test chemical adsorbed by a sediment or soil (i.e., the solid phase) divided by the amount of test chemical in the solution phase, which is in equilibrium with the solid phase, at a fixed solid/solution ratio.

(vii) ''Sediment'' is the unconsolidated inorganic and organic material that is suspended in and being transported by surface water, or has settled out and has deposited into beds.

(viii) ''Soil'' is the unconsolidated mineral material on the immediate surface of the earth that serves as a natural medium for the growth of land plants. Its formation and properties are determined by various factors such as parent material, climate, macro- and microorganisms, topography, and time.

(ix) ''Soil aggregate'' is the combination or arrangement of soil separates (sand, silt, clay) into secondary units. These units may be arranged in the soil profile in a distinctive characteristic pattern that can be classified according to size, shape, and degree of distinctness into classes, types, and grades.

(x) ''Soil classification'' is the systematic arrangement of soils into groups or categories. Broad groupings are based on general soil characteristics while subdivisions are based on more detailed differences in specific properties. The soil classification system used in this standard and the one used today in the United States is the 7th Approximation-Comprehensive System. The ranking of subdivisions under this system is: Order, Suborder, Great group, family, and series.

(xi) A ''soil horizon'' is a layer of soil approximately parallel to the land surface. Adjacent layers differ in physical, chemical, and biological properties such as color, structure, texture, consistency, kinds and numbers of organisms present, and degree of acidity or alkalinity.

(xii) ''Soil Order'' is the broadest category of soil classification and is based on the general similarities of soil physical/chemical properties. The formation of soil by similar general genetic processes causes these similarities. The Soil Orders found in the United States are: Alfisol, Aridisol, Entisol, Histosol, Inceptisol, Mollisol, Oxisol, Spodosol, Ultisol, and Vertisol.

(xiii) ''Soil series'' is the basic unit of soil classification and is a subdivision of a family. A series consists of soils that were developed under comparable climatic and vegetational conditions. The soils comprising a series are essentially alike in all major profile characteristics except for the texture of the ''A'' horizon (i.e., the surface layer of soil).

(xiv) ''Soil texture'' is a classification of soils that is based on the relative proportions of the various soil separates present. The soil textural classes are: clay, sandy clay, silty clay, clay loam, silty clay loam, sandy clay loam, loam, silt loam, silt, sandy loam, loamy sand, and sand.

(3) *Principle of the test method.* (i) The extent of adsorption of a chemical onto sediment or soil is measured, using this test guideline, by equilibrating aqueous solutions containing different, but environmentally realistic, concentrations of the test chemical with a known quantity of sediment or soil. After equilibrium is reached, the distribution of the chemical between the water phase and the solid phase is quantitatively measured by a suitable analytical method. Then, sorption constants are calculated by using the Freundlich equation:

Equation 1

$$x/m = C_s = KC_e^{1/n}$$

where:

C_e=Equilibrium concentration of the chemical in the solution phase

C_s=Equilibrium concentration of the chemical in the solid phase

K=Freundlich adsorption coefficient

m=The mass of the solid in grams

$^{l/n}$=Exponent where n is a constant
x=The mass in micrograms of the chemical adsorbed by m grams of solid.

Logarithmetic transformation of the Freundlich equation yields the following linear relationship:

Equation 2

$\log C_s = \log K + (l/n) \log C_e$

(ii) In order to estimate the environmental movement of the test chemical, the values K and l/n are compared with the values of other chemicals whose behavior in soil and sediment systems is well-documented in scientific literature.

(iii) The adsorption isotherm (AI) test has many desirable features. First, adsorption results are highly reproducible. The test provides excellent quantitative data readily amenable to statistical analyses. Also, it has relatively modest requirements for chemicals, soils, laboratory space, and equipment. It allows solution phase organic chemical determinations that are relatively uncomplicated. A chemical extraction-mass balance procedure to elicit information on chemical transformations occurring at colloid interfaces can be incorporated into this test. The ease of performing the isotherm test and mass balance will depend upon the physical/chemical properties of the test chemical and the availability of suitable analytical techniques to measure the chemical.

(iv) The papers by Aharonson and Kafkafi (1975) under paragraph (d)(1) of this section, Harvey (1974) under paragraph (d)(3) of this section, Murray (1975) under paragraph (d)(4) of this section, Saltzman (1972) under paragraph (d)(5) of this section, Weber (1971) under paragraph (d)(6) of this section, and Wu (1975) under paragraph (d)(7) of this section served as the basis for this section. The soil and colloid chemistry literature and the analytical chemistry literature substantiate the experimental conditions and procedures specified in this guideline as accepted, standard procedures.

(4) *Applicability and specificity.* The AI Test Guideline can be used to determine the soil and sediment adsorption potential of sparingly water soluble to infinitely soluble chemicals. In general, a chemical having a water solubility of less than 0.5 ppm need not be tested with soil as the solid phase, since the literature indicates that these chemicals are, in general, immobile in soils, see Goring and Hamaker (1972) under paragraph (d)(2) of this section. However, this does not preclude future soil adsorption/transformation testing of these chemicals if more refined data are needed for the assessment process.

(b) *Test procedures*—(1) *Test conditions*—(i) *Special laboratory equipment.* (A) Equilibrating solutions that contain, besides the test chemical, 0.01M calcium nitrate dissolved in sterilized, distilled-deionized H_2O adjusted to neutral pH 7 by boiling to remove CO_2.

(B) Containers shall be composed of material that (*1*) adsorb negligible amounts of test chemical, and (*2*) withstand high speed centrifugation. The volume of the container is not a major consideration; however, it is extremely important that the amount of soil or sediment and the solid/solution ratio used in the study result in minimal container headspace. It is also extremely important that the containers be sterilized before use.

(C) A 150 micron (100 mesh) stainless-steel or brass sieve.

(D) Drying oven, with circulating air, that can attain 100 °C.

(E) Vortex mixer or a comparable device.

(F) Rotary shaker or a comparable device.

(G) High speed temperature-controlled centrifuge capable of sedimenting particles greater than 0.5 micron from aqueous solution.

(ii) *Temperature.* 1'≤The test procedure shall be performed at 23±5 °C.

(iii) *Replications.* Three replications of the experimental treatments shall be used.

(iv) *Soil pretreatment.* The following soil pretreatment steps shall be performed under the following conditions:

(A) Decrease the water content, air or oven-dry soils at or below 50 °C.

(B) Reduce aggregate size before and during sieving, crush and grind dried soil very gently.

(C) Eliminate microbial growth during the test period using a chemical or

physical treatment that does not alter or minimally alters the soil surface properties.

(D) Sieve soils with a 100 mesh stainless-steel or brass sieve.

(E) Store all solutions and soils at temperatures between 0 and 5 °C.

(v) *Sediment pretreatment.* The following sediment pretreatment steps shall be performed under the following conditions:

(A) Decrease the H_2O content by air or oven-drying sediments at or below 50 °C. Sediments should not be dried completely and should remain moist at all times prior to testing and analysis.

(B) Eliminate microbial growth during the test period by using a chemical and/or physical treatment that does not alter or minimally alters the colloid surface's properties.

(C) Store at temperatures between 0 and 5°C.

(vi) *Solid/solution ratio.* The solid/solution ratio shall be equal to or greater than 1/10. If possible, the ratios should be equal to or greater than 1/5. The sediment or soil dry weight after drying for a 24-hour minimum at 90 °C is recommended for use as the weight of the solid for ratio and data calculations. If an insufficient amount of chemical remains in the water phase for quantification, the solid/solution ratio should be adjusted so that measurable amounts of the test chemical remain in solution.

(vii) *Equilibration time.* The equilibration time will depend upon the length of time needed for the parent chemical to attain an equilibrium distribution between the solid phase and the aqueous solution phase. The equilibration time shall be determined by the following procedure:

(A) Equilibrate one solution containing a known concentration of the test chemical with the sediment or soil in a solid/solution ratio equal to or greater than 1/10 and preferably equal to or greater than 1/5. It is important that the concentration of the test chemical in the equilibrating solution (*1*) does not exceed one-half of its solubility and (*2*) should be 10 ppm or less at the end of the equilibration period.

(B) Measure the concentration of the chemical in the solution phase at frequent intervals during the equilibration period.

(C) Determine the equilibration time by plotting the measured concentration versus time of sampling; the equilibration time is the minimum period of time needed to establish a rate of change of solution concentration of 5 percent or less per 24 hours.

(viii) *Centrifugation time.* Calculate the centrifugation time, t_c, necessary to remove particles from solution greater than approximately 0.5 μm (5×10^{-5} μm) equivalent diameter (which represents all particles except the fine clay fraction) using the following equation:

Equation 3

$$t_c(\text{min})=1.41\times10^9\ [\log(R_2/R_1)]/N^2$$

where:

t_c=centrifuge time in minutes

R_2=distance from centrifuge spindle to deposition surface of centrifuge

R_1=distance from spindle to surface of the sample

N=number of revolutions of the centrifuge per minute.

(ix) *Storage of solutions.* If the chemical analysis is delayed during the course of the experiment, store all solutions between 0 and 5 °C.

(x) *Solvents for extraction.* It is important that the solvent used to extract the chemical from the sediment or soil is reagent grade or better. Solvents shall contain no impurities which could interfere with the determination of the test compound.

(2) *Test procedure*—(i) *Equilibration.* Add six solutions containing different concentrations of the test chemical to at least one gram of each solid. The initial concentration of the test chemical in these solutions will depend on the affinity the chemical has for the sediment or soil. Therefore, after equilibrium is attained, it is extremely important that the highest concentration of the test chemical in the equilibrating solution does not exceed 10 ppm, is at least one order of magnitude greater than the lowest concentration reported, and does not exceed one half of its solubility.

(A) Immediately after the solutions are added to the solids, tightly cap the containers and vigorously agitate them

for several minutes with a vortex mixture or similar device.

(B) Shake the containers throughout the equilibration period at a rate that suspends all solids in the solution phase.

(ii) *Centrifugation.* When the equilibration time has expired, centrifuge the containers for t_c minutes.

(iii) *Chemical extraction.* (A) After centrifugation, remove the supernatant aqueous phase from the solid-solution mixture.

(B) Extract the chemical adsorbed on the sediment or soil colloid surfaces with solvent.

(iv) *Chemical analysis.* Determine the amount of parent test chemical in the aqueous equilibrating solution and organic solvent extractions. Use any method or combination of methods suitable for the identification and quantitative detection of the parent test chemical.

(c) *Reporting.* Report the following information:

(1) Temperature at which the test was conducted.

(2) Detailed description of the analytical technique(s) used in the chemical extraction, recovery, and quantitative analysis of the parent chemical.

(3) Amount of parent test chemical applied, the amount recovered, and the percent recovered.

(4) Extent of adsorption by containers and the approach used to correct the data for adsorption by containers.

(5) The individual observations, the mean values, and graphical plots of x/m as a function of C_e for each sediment or soil for (i) the equilibration time determination and (ii) the isotherm determination.

(6) The quantities K, n, and l/n.

(7) Soil information: Soil Order, series, texture, sampling location, horizon, general clay fraction mineralogy.

(8) Sediment information: sampling location, general clay fraction mineralogy.

(9) Sediment and soil physical-chemical properties: percent sand, silt, and clay (particle size analysis); percent organic matter; pH (1/1 solids/H_2O); and cation exchange capacity.

(10) The procedures used to determine the physical/chemical properties listed under paragraphs (c) (7) through (9) of this section.

(d) *References.* For additional background information on this test guideline the following references should be consulted:

(1) Aharonson, N., Kafkafi, U. ''Adsorption, mobility and persistence of thiabendazole and methyl 2-benzimidasole carbamate in soils,'' *Journal of Agricultural and Food Chemistry,* 23:720–724 (1975).

(2) Goring, C.A.I., Hamaker, J.W., (eds). *Organic Chemicals in the Soil Environment.* Vol. I & II (New York: Marcel Dekker, Inc., 1972).

(3) Harvey, R.G. et al. ''Soil adsorption and volatility of dinitroaniline herbicides,'' *Weed Science,* 22:120–124 (1974).

(4) Murray, D.S. et al. ''Comparative adsorption, desorption, and mobility of dipropetryn and prometryn in soil,'' *Journal of Agricultural and Food Chemistry,* 23:578–581 (1973).

(5) Saltzman, S.L. et al. ''Adsorption, desorption of parathion as affected by soil organic matter,'' *Journal of Agricultural and Food Chemistry,* 20:1224–1226 (1972).

(6) Weber, J.B. ''Model soil system, herbicide leaching, and sorption,'' *Weed Science,* 19:145–160 (1971).

(7) Wu, C.H., et al. ''Napropamide adsorption, desorption, and movement in soils,'' *Weed Science,* 23:454–457 (1975).

[50 FR 39252, Sept. 27, 1985, as amended at 52 FR 19058, May 20, 1987; 54 FR 29715, July 14, 1989]

Subpart D—Transformation Processes

§ 796.3100 Aerobic aquatic biodegradation.

(a) *Introduction*—(1) *Purpose.* (i) This Guideline is designed to develop data on the rate and extent of aerobic biodegradation that might occur when chemical substances are released to aquatic environments. A high biodegradability result in this test provides evidence that the test substance will be biodegradable in natural aerobic freshwater environments.

(ii) On the contrary, a low biodegradation result may have other causes than poor biodegradability of the test substance. Inhibition of the microbial inoculum by the test substance at the test concentration may be observed. In such cases, further work is needed to assess the aerobic aquatic biodegradability and to determine the concentrations at which toxic effects are evident. An estimate of the

expected environmental concentration will help to put toxic effects into perspective.

(2) *Definitions.* (i) ''Adaptation'' is the process by which a substance induces the synthesis of any degradative enzymes necessary to catalyze the transformation of that substance.

(ii) ''Ultimate Biodegradability'' is the breakdown of an organic compound to CO_2, water, the oxides or mineral salts of other elements and/or to products associated with normal metabolic processes of microorganisms.

(iii) ''Ready Biodegradability'' is an expression used to describe those substances which, in certain biodegradation test procedures, produce positive results that are unequivocal and which lead to the reasonable assumption that the substance will undergo rapid and ultimate biodegradation in aerobic aquatic environments.

(3) *Principle of the test method.* This Guideline method is based on the method described by William Gledhill (1975) under paragraph (d)(1) of this section. The method consists of a 2-week inoculum buildup period during which soil and sewage microorganisms are provided the opportunity to adapt to the test compound. This inoculum is added to a specially equipped Erlenmeyer flask containing a defined medium with test substance. A reservoir holding barium hydroxide solution is suspended in the test flask. After inoculation, the test flasks are sparged with CO_2-free air, sealed, and incubated, with shaking in the dark. Periodically, samples of the test mixture containing water-soluble test substances are analyzed for dissolved organic carbon (DOC) and the $Ba(OH)_2$ from the reservoirs is titrated to measure the amount of CO_2 evolved. Differences in the extent of DOC disappearance and CO_2 evolution between control flasks containing no test substance, and flasks containing test substance are used to estimate the degree of ultimate biodegradation.

(4) *Prerequisites.* The total organic carbon (TOC) content of the test substance shall be calculated or, if this is not possible, analyzed, to enable the percent of theoretical yield of carbon dioxide and percent of DOC loss to be calculated.

(5) *Guideline information.* (i) Information on the relative proportions of the major components of the test substance will be useful in interpreting the results obtained, particularly in those cases where the result lies close to a ''pass level.''

(ii) Information on the toxicity of the chemical may be useful in the interpretation of low results and in the selection of appropriate test concentrations.

(6) *Reference substances.* Where investigating a chemical substance, reference compounds may be useful and an inventory of suitable reference compounds needs to be identified. In order to check the activity of the inoculum the use of a reference compound is desirable. Aniline, sodium citrate, dextrose, phthalic acid and trimellitic acid will exhibit ultimate biodegradation under the conditions of this Test Guideline method. These reference substances must yield 60 percent of theoretical maximum CO_2 and show a removal of 70 percent DOC within 28 days. Otherwise the test is regarded as invalid and shall be repeated using an inoculum from a different source.

(7) *Reproducibility.* The reproducibility of the method has not yet been determined; however it is believed to be appropriate for a screening test which has solely an acceptance but no rejective function.

(8) *Sensitivity.* The sensitivity of the method is determined by the ability to measure the endogenous CO_2 production of the inoculum in the blank flask and by the sensitivity limit of the dissolved organic carbon analysis. If the test is adapted to handle ^{14}C-labeled test substances, test substance concentrations can be much lower.

(9) *Possibility of standardization.* This possibility exists. The major difficulty is to standardize the inoculum in such a way that interlaboratory reproducibility is ensured.

(10) *Possibility of automation.* None at present, although parts of the analyses may be automated.

(b) *Test procedures*—(1) *Preparations*—(i) *Apparatus.* The shake flask apparatus under the following Figure 1 contains 10 mL of 0.2N $Ba(OH)_2$ in an open container suspended over 1 liter of culture medium in a 2-liter Erlenmeyer flask.

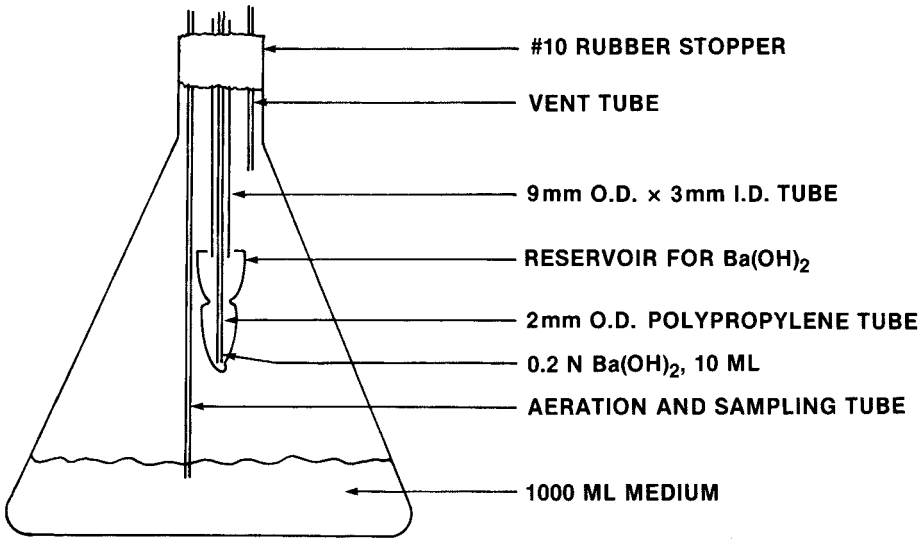

FIGURE 1—SHAKE-FLASK SYSTEM FOR CARBON DIOXIDE EVOLUTION

The $Ba(OH)_2$ container is made by placing a constriction just above the 10 mL mark of a 50 mL heavy-duty centrifuge tube and attaching the centrifuge tube to a 2 mm I.D.×9 mm O.D. glass tube by means of 3 glass support rods. The centrifuge tube opening is large enough to permit CO_2 to diffuse into the $Ba(OH)_2$, while the constriction permits transferal of the flask to and from the shaker without $Ba(OH)_2$ spillage into the medium. For periodic removal and addition of base from the center well, a polypropylene capillary tube, attached at one end to a 10 ml disposable syringe, is inserted through the 9 mm O.D. glass tube into the $Ba(OH)_2$ reservoir. The reservoir access port is easily sealed during incubation with a serum bottle stopper. Two glass tubes are added for sparging, venting, and medium sampling. The tops of these tubes are connected with a short section of flexible tubing during incubation.

(ii) *Reagents and stock solutions.* (A) Stock solutions, I, II, and III under the following Table 1.

(B) Yeast extract.

(C) Vitamin-free casamino acids.

(D) 70 percent O_2 in nitrogen or CO_2-free air.

(E) 0.2N $Ba(OH)_2$.

(F) 0.1 N HCl.

(G) 20 percent H_2SO_4.

(H) Phenolphthalein.

(I) Dilution water—distilled, deionized water (DIW).

(iii) *Soil inoculum.* A fresh sample of an organically rich soil is used as the inoculum in the ultimate biodegradation test. Soil is collected, prepared, and stored according to the recommendations of Pramer and Bartha (1972) under paragraph (d)(2) of this section. The soil surface is cleared of litter and a soil sample is obtained 10 to 20 cm below the surface. The sample is screened through a sieve with 2 to 5 mm openings and stored in a polyethylene bag at 2 to 4 °C for not more than 30 days prior to use. The soil is never allowed to air-dry, and shall not be frozen during storage.

TABLE 1—MEDIUM EMPLOYED FOR ASSAY OF CO_2 EVOLUTION

Solution [1]	Compound	Stock Solution Conc. (g/L)
I	NH_4Cl	35
	KNO_3	15
	$K_2HPO_4 \cdot 3H_2O$	750

TABLE 1—MEDIUM EMPLOYED FOR ASSAY OF CO_2 EVOLUTION—Continued

Solution [1]	Compound	Stock Solution Conc. (g/L)
	$NaH_2PO_4 \cdot H_2O$	25
II [2]	KCl	10
	$MgSO_4$	20
	$FeSO_4 \cdot 7H_2O$	1
III	$CaCl_2$	5
	$ZnCl_2$	0.05
	$MnCl_2 \cdot 4H_2O$	0.5
	$CuCl_2$	0.05
	$CoCl_2$	0.001
	$H_3 BO_3$	0.001
	MoO_3	0.0004

[1]= Each liter of test medium contains 1 mL of each solution.
[2]= Final pH is adjusted to 3.0 with 0.10 N HCl.

(iv) *Acclimation Medium.* Acclimation medium is prepared by adding, for each liter of distilled, deionized water (DIW): 1 mL each of solutions I, II, and III in Table 1 in paragraph (b)(1)(iii) of this section, 1.0 gm of soil inoculum (prepared according to paragraph (b)(1)(iii) of this section), 2.0 mL of aerated mixed liquor (obtained from an activated sludge treatment plant not more than 2 days prior to commencing the acclimation phase, and stored in the interim at 4 °C) and 50 mL raw domestic influent sewage. This medium is mixed for 15 minutes and filtered through a glass wool plug in a glass funnel. The filtrate is permitted to stand for 1 hour, refiltered through glass wool, and supplemented with 25 mg/L each of Difco vitamin-free casamino acids and yeast extract. Appropriate volumes are added to 2-liter Erlenmeyer flasks. Test compounds are added incrementally during the acclimation period at concentrations equivalent to 4, 8, and 8 mg/L carbon on days 0, 7, and 11, respectively. On day 14, the medium is refiltered through glass wool prior to use in the test. For evaluating the biodegradability of a series of functionally or structurally related chemicals, media from all inoculum flasks may be combined before final filtration.

(2) *Procedures.* (i) Inoculum (100 mL of acclimation medium) is added to 900 mL DIW containing 1 mL each of solutions I, II, and III in Table 1 under paragraph (b)(1)(iii) of this section in a 2-liter Erlenmeyer flask. Test compound equivalent to 10 mg/liter carbon is added to each of the replicate flasks containing the test medium. Ten mL of 0.2 N Ba $(OH)_2$ are added to the suspended reservoir in each flask and duplicate 10 mL samples of $Ba(OH)_2$ are also saved as titration blanks for analysis with test samples. Flasks are sparged with CO_2-free air (for volatile test materials, sparging is done prior to addition of the chemical), sealed, and placed on a gyrotary shaker (approximately 125 rpm) at 20 to 25 °C in the dark. For each set of experiments, each test, reference, inhibited, and control system should be analyzed at time zero and at a minimum of four other times from time zero through day 28. Sampling must be made with sufficient frequency to allow for a smooth plot of biodegradation with time. Sampling times should be varied by the investigator as deemed appropriate to match the rate of degradation of the test substance. Tests may be terminated when biodegradation reaches a plateau and is consistent (±10 percent) over 3 consecutive days or on day 28, whichever occurs first. For chemicals which are water soluble at the test concentration, an adequate volume (5 to 10 mL) of medium is removed for DOC analysis. Each sample for DOC analysis should be filtered through a membrane filter of 0.45 micrometer pore diameter before DOC analysis. For all test and reference compounds, $Ba(OH)_2$ from the center well is removed for analysis. The center well is rinsed with 10 mL CO_2-free DIW and is refilled with fresh base. Rinse water is combined with the $Ba(OH)_2$ sample to be analyzed. Flasks are resealed and placed on the shaker. On the day prior to terminating the test, 3 mL of 20 percent H_2SO_4 are added to the medium to release carbonate bound CO_2.

(ii) For each set of experiments, each test substance shall be tested in triplicate.

(iii) For each set of experiments, one or two reference compounds are included to assess the microbial activity of the test medium. Duplicate reference flasks are prepared by adding reference compound equivalent to 10 mg/liter carbon to each of two flasks containing the test medium. Reference compounds which are positive for ultimate biodegradability include: sodium

citrate, dextrose, phthalic acid, trimellitic acid, and aniline.

(iv) For each test set, triplicate controls receiving inoculated medium and no test compound, plus all test and reference flasks, are analyzed for CO_2 evolution and DOC removal. Results from analysis of the control flasks (DOC, CO_2 evolution, etc.) are subtracted from corresponding experimental flasks containing test compound in order to arrive at the net effect due to the test compound.

(v) A test system containing a growth inhibitor should be established as a control for each substance tested for biodegradation by this method. That inhibited system must contain the same amount of water, mineral nutrients, inoculum, and test substance used in the uninhibited test systems, plus 50 mg/L mercuric chloride ($HgCl_2$) to inhibit microbial activity.

(vi) Flasks shall be incubated in the dark to minimize both photochemical reactions and algal growth. Appropriate sterile controls or controls containing a metabolic inhibitor, such as 50 mg/1 $HgCl_2$, are needed to correct for interferences due to nonbiological degradation. With volatile organic materials, sparging with CO_2-free air is performed only once, just prior to addition of the test chemical. Analyses for CO_2 evolution and DOC removal are conducted within 2 to 3 hours of sampling to minimize interferences which may occur in storage. All glassware should be free of organic carbon contaminants.

(3) *Analytical measurements.* The quantity of CO_2 evolved is measured by titration of the entire $Ba(OH)_2$ sample (10 mL $Ba(OH)_2$+10 mL rinse water) with 0.1 N HCl to the phenolphthalein end point. $Ba(OH)_2$ blanks are also supplemented with 10 mL CO_2-free DIW and titrated in a similar manner. Samples (5 mL) for DOC are centrifuged and/or filtered and supernatant or filtrate analyzed by a suitable total organic carbon method.

(c) *Data and reporting*—(1) *Treatment of results.* (i) Test compound (10 mg carbon) is theoretically converted to 0.833 mmol CO_2. Absorbed CO_2 precipitates as $BaCO_3$ from $Ba(OH)_2$, causing a reduction in alkalinity by the equivalent of 16.67 mL of 0.1 N HCl for complete conversion of the test compound carbon to CO_2. Therefore, the percent theoretical CO_2 evolved from the test compound is calculated at any sampling time from the formula:

Percent CO_2 evolution=[(TF–CF)/16.67] 100 (for 10 mg/L test compound carbon)

where:

TF= mL 0.1 N HCl required to titrate $Ba(OH)_2$ samples from the test flask

CF= mL 0.1 N HCl required to titrate $Ba(OH)_2$ samples from the control flask.

(ii) The cumulative percent CO_2 evolution at any sample time is calculated as the summation of the percent CO_2 evolved at all sample points of the test.

(iii) The percent DOC disappearance from the test compound is calculated from the following equation:

Percent DOC Removal=$[1-(DTF_x-DCF_x)/(DTF_o-DCF_o)]$ 100

where:

DTF= Dissolved organic carbon from test flask

DCF= Dissolved organic carbon from control flask

o= Day zero measurements

x= Day of measurements during test.

(iv) The difference between the amount of 0.1 N HCl used for the $Ba(OH)_2$ titration blank samples and the $Ba(OH)_2$ samples from the control units (no test compound) is an indication of the activity of the microorganisms in the test system. In general, this difference is approximately 1 to 3 mL of 0.1 N HCl at each sampling time. A finding of no difference in the titration volumes between these two samples indicates a poor inoculum. In this case, the validity of the test results is questionable and the test set shall be rerun beginning with the acclimation phase.

(v) CO_2 evolution in the reference flasks is also indicative of the activity of the microbial test system. The suggested reference compounds should all yield final CO_2 evolution values of at least 60 percent of theoretical CO_2. If, for any test set, the percent theoretical CO_2 evolution value for the reference flasks is outside this range, the test results are considered invalid and the test is rerun.

(vi) Inhibition by the test compound is indicated by lower CO_2 evolution in the test flasks than in the control flasks. If inhibition is noted, the study for this compound is rerun beginning with the acclimation phase. During the test phase for inhibitory compounds, the test chemical is added incrementally according to the schedule: Day 0—0.5 mg/liter as organic carbon, Day 2—1 mg/liter C, Day 4—1.5 mg/liter C, Day 7—2 mg/liter C, Day 10—5 mg/liter C. For this case, the $Ba(OH)_2$ is sampled on Day 10, and weekly thereafter. The total test duration remains 28 days.

(vii) The use of ^{14}C-labeled chemicals is not required. If appropriately labeled test substance is readily available and if the investigator chooses to use this procedure with labeled test substance, this is an acceptable alternative. If this option is chosen, the investigator may use lower test substance concentrations if those concentrations are more representative of environmental levels.

(2) *Test report.* (i) For each test and reference compound, the following data shall be reported.

(ii) Information on the inoculum, including source, collection date, handling, storage and adaptation possibilities (i.e., that the inoculum might have been exposed to the test substance either before or after collection and prior to use in the test).

(iii) Results from each test, reference, inhibited (with $HgCl_2$) and control system at each sampling time, including an average result for the triplicate test substance systems and the standard deviation for that average.

(iv) Average cumulative percent theoretical CO_2 evolution over the test duration.

(v) Dissolved organic carbon due to test compound at each sampling time (DTF–DCF).

(vi) Average percent DOC removal at each sampling time.

(vii) Twenty-eight day standard deviation for percent CO_2 evolution and DOC removal.

(d) *References.* For additional background information on this test guideline the following references should be consulted:

(1) Gledhill, W.E. ''Screening Test for Assessment of Ultimate Biodegradability: Linear Alkyl Benzene Sulfonate,'' *Applied Microbiology,* 30:922–929 (1975).

(2) Pramer, D., Bartha, R. ''Preparation and Processing of Soil Samples for Biodegradation Testing,'' *Environmental Letters,* 2:217–224 (1972).

[50 FR 39252, Sept. 27, 1985, as amended at 52 FR 19058, May 20, 1987]

§ 796.3500 Hydrolysis as a function of pH at 25 °C.

(a) *Introduction*—(1) *Background and purpose.* (i) Water is one of the most widely distributed substances in the environment. It covers a large portion of the earth's surface as oceans, rivers, and lakes. The soil also contains water, as does the atmosphere in the form of water vapor. As a result of this ubiquitousness, chemicals introduced into the environment almost always come into contact with aqueous media. Certain classes of these chemicals, upon such contact, can undergo hydrolysis, which is one of the most common reactions controlling chemical stability and is, therefore, one of the main chemical degradation paths of these substances in the environment.

(ii) Since hydrolysis can be such an important degradation path for certain classes of chemicals, it is necessary, in assessing the fate of these chemicals in the environment, to know whether, at what rate, and under what conditions a substance will hydrolyze. Some of these reactions can occur so rapidly that there may be greater concern about the products of the transformation than about the parent compounds. In other cases, a substance will be resistant to hydrolysis under typical environmental conditions, while, in still other instances, the substance may have an intermediate stability that can result in the necessity for an assessment of both the original compound and its transformation products. The importance of transformation of chemicals via hydrolysis in aqueous media in the environment can be determined quantitatively from data on hydrolysis rate constants. This hydrolysis Test Guideline represents a test to allow one to determine rates of hydrolysis at any pH of environmental concern at 25°C.

(2) *Definitions and units.* (i) ''Hydrolysis'' is defined as the reaction of an organic chemical with water, such that

one or more bonds are broken and the reaction products of the transformation incorporate the elements of water (H_2O).

(ii) ''Elimination'' is defined in this Test Guideline to be a reaction of an organic chemical (RX) in water in which the X group is lost. These reactions generally follow the same type of rate laws that hydrolysis reactions follow and, thus, are also covered in this Test Guideline.

(iii) A ''first-order reaction'' is defined as a reaction in which the rate of disappearance of the chemical substance being tested is directly proportional to the concentration of the chemical substance and is not a function of the concentrations of any other substances present in the reaction mixture.

(iv) The ''half-life'' of a chemical is defined as the time required for the concentration of the chemical substance being tested to be reduced to one-half its initial value.

(v) ''Hydrolysis'' refers to a reaction of an organic chemical with water such that one or more bonds are broken and the reaction products incorporate the elements of water (H_2O). This type of transformation often results in the net exchange of a group X, on an organic chemical RX, for the OH group from water. This can be written as:

$$RX+HOH \rightarrow ROH+HX.$$

(A) Another result of hydrolysis can be the incorporation of both H and OH in a single product. An example of this is the hydrolysis of epoxides, which can be represented by

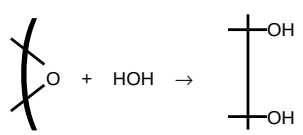

(B) The hydrolysis reaction can be catalyzed by acidic or basic species, including OH^- and $H_3O^=$ ($H^=$). The promotion of the reaction by H_3O^- or OH^- is called specific acid or specific base catalysis, respectively, as contrasted with general acid or base catalysis encountered with other cationic or anionic species. Usually, the rate law for chemical RX can be written as:

Equation 1

$$-d[RX]/_{d=} = k_h[RX]=k_A[H^=]\,[RX] + k_B[OH^-]\,[RX]+k'_N\,[H_2O]\,[RX],$$

where K_A, k_B and k'_N are the second-order rate constants for acid and base catalyzed and neutral water processes, respectively. In dilute solutions, such as are encountered in following this Test Guideline, water is present in great excess and its concentration is, thus, essentially constant during the course of the hydrolysis reaction. At fixed pH, the reaction, therefore, becomes pseudo first-order, and the rate constant (k_h) can be written as:

Equation 2

$$k_h=k_A\,[H^=]+k_B\,[OH^-]+k_N,$$

where k_N is the first-order neutral water rate constant. Since this is a pseudo first-order process, the half-life is independent of the concentration and can be written as:

Equation 3

$$t_{1/2}=0.693/k_h.$$

At constant pH, Equation 1 can be integrated to yield the first order rate expression

Equation 4

$$\log_{10}C=-\,(k_h\,t/_{2.303})+\log_{10}C_o,$$

where C is the concentration of the test chemical at time t and C_o is the initial chemical concentration (t=0).

(C) At a given pH, Equation 2 under paragraph (a)(2)(v)(B) of this section contains three unknowns, k_A, k_B, and k_N. Therefore, three equations (i.e., measurements at three different pH's at a fixed temperature) are required if one wishes to solve for these quantities. Making suitable approximations for quantities that are negligible, the expressions for k_A, k_B, and k_N using values of k_h measured at pH 3, 7, and 11 are:

Equation 5

$$k_A=10^3\,[k_h\,(3)-k_h\,(7)+10^{-4}\,k_h\,(11)]$$

$$k_B=10^3\,[k_h\,(11)-k_h\,(7)+10^{-4}\,k_h\,(3)]$$

$$k_N=k_h\,(7)-10^{-4}\,[k_h\,(3)+k_h\,(11)]$$

The calculated rate constants from equation 5 under this paragraph can be employed in equation 2 under paragraph (a)(2)(v)(B) of this section to calculate the hydrolysis rate of a chemical at any pH of environmental concern.

(D) The equations under paragraph (a)(2) of this section apply whether the test chemical has one or more hydrolyzable groups. In the latter case, the rate may be written as:

Equation 6

$$-d[RX]/_{dt}=[RX]=k_2\,[RX]+\ .\ .\ .\ .\ +k_n\,[RX]=(k_1+k_2+\ .\ .\ .\ .\ .\ k_n)\,[RX]=k_h\,[RX].$$

Equation 6 applies to the hydrolysis rate of a molecule having n hydrolyzable groups, each of which follows first-order reaction kinetics. The measured k_h is now the sum of the individual reaction rates and is the only rate constant required in this section.

(3) *Principle of the test method.* Procedures described in this section enable sponsors to obtain quantitative information on hydrolysis rates through a determination of hydrolysis rate constants and half-lives of chemicals at pH 3.00, 7.00, and 11.00 at 25 °C. The three measured rate constants are used to determine the acidic, basic, and neutral rate constants associated with a hydrolytic reaction. The latter constants can then be employed in determining the hydrolysis rates of chemicals at any pH of environmental concern at 25 °C.

(4) *Applicability and specificity.* There are several different common classes of organic chemicals that are subject to hydrolysis transformation, including esters, amides, lactones, carbamates, organophosphates, and alkyl halides. Processes other than nucleophilic displacement by water can also take place. Among these are elimination reactions that exhibit behavior similar to hydrolysis and, therefore, are also covered in this section.

(b) *Test procedures*—(1) *Test conditions*—(i) *Special laboratory equipment.* (A) A thermostatic bath that can be maintained at a temperature of 25±1 °C.

(B) A pH meter that can resolve differences of 0.05 pH units or less.

(C) Stoppered volumetric flasks (no grease) or glass ampoules that can be sealed.

(ii) *Purity of water.* Reagent-grade water (e.g., water meeting ASTM Type IIA standards or an equivalent grade) shall be used to minimize biodegradation. ASTM Type IIA water is described in ASTM D 1193–77 (Reapproved 1983), ''Standard Specification for Reagent Water.'' ASTM D 1193–77 (Reapproved 1983) is available for inspection at the Office of the Federal Register, 800 North Capitol Street, NW., suite 700, Washington, DC. This incorporation by reference was approved by the Director of the Office of the Federal Register. This material is incorporated as it exists on the date of approval and a notice of any change in this material will be published in the FEDERAL REGISTER. Copies of the incorporated material may be obtained from the Non-Confidential Information Center (NCIC) (7407), Office of Pollution Prevention and Toxics, U.S. Environmental Protection Agency, Room B–607 NEM, 401 M St., SW., Washington, DC 20460, between the hours of 12 p.m. and 4 p.m. weekdays excluding legal holidays, or from the American Society for Testing and Materials (ASTM), 1916 Race Street, Philadelphia, PA 19103.

(iii) *Sterilization.* All glassware shall be sterilized. Aseptic conditions shall be used in the preparation of all solutions and in carrying out all hydrolysis experiments to eliminate or minimize biodegradation. Glassware can be sterilized in an autoclave or by any other suitable method.

(iv) *Precautions for volatility.* If the chemical is volatile the reaction vessels shall be almost completely filled and sealed.

(v) *Temperature controls.* All hydrolysis reactions shall be carried out at 25 °C (±1 °C) and with the temperature controlled to ±0.1 °C.

(vi) *pH conditions.* It is recommended that all hydrolysis experiments be performed at pH 3.00, 7.00, and 11.00 ± 0.05 using the appropriate buffers described in paragraph (b)(2)(i)(A) of this section.

(vii) *Concentration of solutions of chemical substances.* The concentration of the test chemical shall be less than one-half the chemical's solubility in water but not greater than 10^{-3} M.

(viii) *Effect of acidic and basic groups.* Complications can arise upon measuring the rate of hydrolysis of chemicals that reversibly ionize or are protonated in the pH range 3.00 to 11.00. Therefore, for these chemicals, it is recommended that these hydrolysis tests be performed at pH 5.00, 7.00, and 900±0.05 using the appropriate buffers described in paragraphs (b)(2)(i) (A) and (B) of this section. If a test chemical reversibly ionizes or protonates in the pH range 5.00 to 9.00, then it is recommended that additional hydrolysis tests should be carried out at pH 6.00 and 8.00±0.05 using the buffers described in paragraph (b)(2)(i)(B) of this section.

(ix) *Buffer catalysis.* For certain chemicals, buffers may catalyze the hydrolysis reaction. If this is suspected, hydrolysis rate determination shall be carried out with the appropriate buffers and the same experiments repeated at buffer concentrations lowered by at least a factor of five. If the hydrolysis reaction produces a change of greater than 0.05 pH units in the lower concentration buffers at the end of the measurement time, the test chemical concentrations also shall be lowered by at least a factor of five. Alternatively, test chemical concentrations and buffer concentrations may both be lowered simultaneously by a factor of five. A sufficient criterion for minimization of buffer catalysis is an observed equality in the hydrolysis rate constant for two different solutions differing in buffer or test chemical concentration by a factor of five.

(x) *Photosensitive chemicals.* The solution absorption spectrum can be employed to determine whether a particular chemical is potentially subject to photolytic transformation upon exposure to light. For chemicals that absorb light of wavelengths greater than 290 nm, the hydrolysis experiment shall be carried out in the dark, under amber or red safelights, in amber or red glassware, or employing other suitable methods for preventing photolysis. The absorption spectrum of the chemical in aqueous solution can be measured under § 796.1050.

(xi) *Chemical analysis of solutions.* In determining the concentrations of the test chemicals in solution, any suitable analytical method may be employed, although methods which are specific for the compound to be tested are preferred. Chromatographic methods are recommended because of their compound specificity in analyzing the parent chemical without interferences from impurities. Whenever practicable, the chosen analytical method should have a precision within ±5 percent.

(2) *Preparation*—(i) *Reagents and solutions*—(A) *Buffer solutions.* Prepare buffer solutions using reagent-grade chemicals and reagent-grade water as follows:

(*1*) pH 3.00: use 250 mL of 0.100M potassium hydrogen phthalate; 111 mL of 0.100M hydrochloric acid; and adjust volume to 500 mL with reagent-grade water.

(*2*) pH 7.00: use 250 mL of 0.100M potassium dihydrogen phosphate; 145 mL of 0.100M sodium hydroxide; and adjust volume to 500 mL with reagent-grade water.

(*3*) pH 11.00: use 250 mL of 0.0500M sodium bicarbonate; 113 mL of 0.100M sodium hydroxide; and adjust volume to 500 mL with reagent-grade water.

(B) *Additional buffer solutions.* For chemicals that ionize or are protonated as discussed in paragraph (b)(1)(viii) of this section, prepare buffers using reagent-grade water and reagent-grade chemicals as follows:

(*1*) pH 5.00: use 250 mL of 0.100M potassium hydrogen phthalate; 113 mL of 0.100M sodium hydroxide; and adjust volume to 500 mL with reagent-grade water.

(*2*) pH 6.00: use 250 mL of 0.100M potassium dihydrogen phosphate; 28 mL of 0.100M sodium hydroxide; and adjust volume to 500 mL with reagent-grade water.

(*3*) pH 8.00: use 250 mL of 0.100M potassium dihydrogen phosphate; 234 mL of 0.100M sodium hydroxide; and adjust volume to 500 mL with reagent-grade water.

(*4*) pH 9.00: use 250 mL of 0.0250M borax (Na_2 B_4O_7); 23 mL of 0.100M hydrochloric aid; and adjust volume to 500 mL with reagent-grade water.

(C) *Adjustment of buffer concentrations.* (*1*) The concentrations of all the above buffer solutions are the maximum concentration to be employed in carrying out hydrolysis measurements. If the

initial concentration of the test chemical is less than 10^{-3} M, the buffer concentration shall be lowered by a corresponding amount; e.g., if the initial test chemical concentration is 10^{-4} M, the concentration of the above buffers shall be reduced by a factor of 10. In addition, for those reactions in which an acid or base is not a reaction product, the minimum buffer concentration necessary for maintaining the pH within +0.05 units shall be employed.

(*2*) Check the pH of all buffer solutions with a pH meter at 25 °C and adjust the pH to the proper value, if necessary.

(D) *Preparation of test solution.* (*1*) If the test chemical is readily soluble in water, prepare an aqueous solution of the chemical in the appropriate buffer and determine the concentration of the chemical. Alternatively, a solution of the chemical in water may be prepared and added to an appropriate buffer solution and the concentration of the chemical then determined. In the latter case, the aliquot shall be small enough so that the concentration of the buffer in the final solution and the pH of the solution remain essentially unchanged. Do not employ heat in dissolving the chemical. The final concentration shall not be greater than one-half the chemical's solubility in water and not greater than 10^{-3} M.

(*2*) If the test chemical is too insoluble in pure water to permit reasonable handling and analytical procedures, it is recommended that the chemical be dissolved in reagent-grade acetonitrile and buffer solution and then added to an aliquot of the acetonitrile solution. Do not employ heat to dissolve the chemical in acetonitrile. The final concentration of the test chemical shall not be greater than one-half the chemical's solubility in water and not greater than 10^{-3} M. In addition, the final concentration of the acetonitrile shall be one volume percent or less.

(3) *Performance of the test.* Carry out all hydrolysis experiments by employing one of the procedures described in this paragraph. Prepare the test solutions as described in paragraph (b)(2)(i) of this section at pH 3.00, 7.00, and 11.00±0.05, and determine the initial test chemical concentration (C_o) in triplicate. Analyze each reaction mixture in triplicate at regular intervals, employing one of the following procedures:

(i) *Procedure 1.* Analyze each test solution at regular intervals to provide a minimum of six measurements with the extent of hydrolysis between 20 to 70 percent. Rates should be rapid enough so that 60 to 70 percent of the chemical is hydrolyzed in 672 hours.

(ii) *Procedure 2.* If the reaction is too slow to conveniently follow hydrolysis to high conversion in 672 hours but still rapid enough to attain at least 20 percent conversion, take 15 to 20 time points at regular intervals after 10 percent conversion is attained.

(iii) *Procedure 3.* (A) If chemical hydrolysis is less than 20 percent after 672 hours, determine the concentration (C) after this time period.

(B) If the pH at the end of concentration measurements employing any of the above three procedures has changed by more than 0.05 units from the initial pH, repeat the experiment using a solution having a test chemical concentration lowered sufficiently to keep the pH variation within 0.05 pH units.

(iv) *Analytical methodology.* Select an analytical method that is most applicable to the analysis of the specific chemical being tested under paragraph (b)(1)(xi) of this section.

(c) *Data and reporting*—(1) *Treatment of results.* (i) If Procedure 1 or 2 were employed in making concentration measurements, use a linear regression analysis with Equation 4 under paragraph (a)(2)(v)(B) of this section to calculate k_h at 25 °C for each pH employed in the hydrolysis experiments. Calculate the coefficient of determination (R^2) for each rate constant. Use Equation 3 under paragraph (a)(2)(v)(B) of this section to calculate the hydrolysis half-life using k_h.

(ii) If Procedure 3 was employed in making rate measurements, use the mean initial concentration (C_o) and the mean concentration of chemical (C) in Equation 4 under paragraph (a)(2)(v)(B) of this section to calculate k_h for each pH used in the experiments. Calculate the hydrolysis half-life using k_h in Equation 3 under paragraph (a)(2)(v)(B) of this section.

(iii) For each set of three concentration replicates, calculate the mean value of C and the standard deviation.

(iv) For test chemicals that are not ionized or protonated between pH 3 and 11, calculate k_A, k_B, and k_N using Equation 5.

(2) *Specific analytical and recovery procedures.* (i) Provide a detailed description or reference for the analytical procedure used, including the calibration data and precision.

(ii) If extraction methods were used to separate the solute from the aqueous solution, provide a description of the extraction method as well as the recovery data.

(3) *Test data report.* (i) For Procedures 1 and 2, report k_h, the hydrolysis half-life ($t_{1/2}$), and the coefficient of determination (R^2) for each pH employed in the rate measurements. In addition, report the individual values, the mean value, and the standard deviation for each set of replicate concentration measurements. Finally, report k_A, k_B, and k_N.

(ii) For Procedure 3, report k_h and the half-life for each pH employed in the rate measurements. In addition, report the individual values, the mean value, and the standard deviation for each set of replicate concentration measurements. Finally, report k_A, k_B, and k_N.

(iii) If, after 672 hours, the concentration (C) is the same as the initial concentration (C_o) within experimental error, then k_h cannot be calculated and the chemical can be reported as being persistent with respect to hydrolysis.

[50 FR 39252, Sept. 27, 1985, as amended at 53 FR 10391, Mar. 31, 1988; 53 FR 12526, Apr. 15, 1988; 53 FR 22323, June 15, 1988; 60 FR 34467, July 3, 1995]

PART 797—ENVIRONMENTAL EFFECTS TESTING GUIDELINES

Subpart A [Reserved]

Subpart B—Aquatic Guidelines

Sec.

797.1050 Algal acute toxicity test.
797.1300 Daphnid acute toxicity test.
797.1330 Daphnid chronic toxicity test.
797.1400 Fish acute toxicity test.
797.1600 Fish early life stage toxicity test.
797.1930 Mysid shrimp acute toxicity test.
797.1950 Mysid shrimp chronic toxicity test.

AUTHORITY: 15 U.S.C. 2603.

SOURCE: 50 FR 39321, Sept. 27, 1985, unless otherwise noted.

Subpart A [Reserved]

Subpart B—Aquatic Guidelines

§ 797.1050 Algal acute toxicity test.

(a) *Purpose.* The guideline in this section is intended for use in developing data on the acute toxicity of chemical substances and mixtures (''chemicals'') subject to environmental effects test regulations under the Toxic Substances Control Act (TSCA) (Pub. L. 94–469, 90 Stat. 2003, 15 U.S.C. 2601 et seq.). This guideline prescribes test procedures and conditions using freshwater and marine algae to develop data on the phytotoxicity of chemicals. The United States Environmental Protection Agency (U.S. EPA) will use data from these tests in assessing the hazard of a chemical to the environment.

(b) *Definitions.* The definitions in section 3 of the Toxic Substances Control Act (TSCA) and the definitions in part 792—Good Laboratory Practice Standards of this chapter apply to this test guideline. The following definitions also apply to this guideline:

(1) *Algicidal* means having the property of killing algae.

(2) *Algistatic* means having the property of inhibiting algal growth.

(3) *ECx* means the experimentally derived chemical concentration that is calculated to effect X percent of the test criterion.

(4) *Growth* means a relative measure of the viability of an algal population based on the number and/or weight of algal cells per volume of nutrient medium or test solution in a specified period of time.

(5) *Static system* means a test container in which the test solution is not renewed during the period of the test.

(c) *Test procedures*—(1) *Summary of the test.* (i) In preparation for the test, fill test containers with appropriate volumes of nutrient medium and/or test solution. Start the test by introducing algae into the test and control containers in the growth chambers. Environmental conditions within the

growth chambers are established at predetermined limits.

(ii) At the end of 96 hours enumerate the algal cells in all containers to determine inhibition or stimulation of growth in test containers compared to controls. Use data to define the concentration-response curve, and calculate the EC_{10}, EC_{50}, and EC_{90} values.

(2) [Reserved]

(3) *Range-finding test.* (i) A range-finding test should be conducted to determine:

(A) If definitive testing is necessary.

(B) Test chemical concentrations for the definitive test.

(ii) Algae are exposed to a widely spaced (e.g., log interval) chemical concentration series. The lowest value in the series, exclusive of controls, should be at the chemical's detection limit. The upper value, for water soluble compounds, should be the saturation concentration. No replicates are required; and nominal concentrations of the chemical are acceptable unless definitive testing is not required.

(iii) The test is performed once for each of the recommended algal species or selected alternates. Test chambers should contain equal volumes of test solution and approximately 1×10^4 *Selenastrum* cells/ml or 7.7×10^4 *Skeletonema* cells/ml of test solution. The algae should be exposed to each concentration of test chemical for up to 96 hours. The exposure period may be shortened if data suitable for the purposes of the range-finding test can be obtained in less time.

(iv) Definitive testing is not necessary if the highest chemical concentration tested (water saturation concentration or 1000 mg/l) results in less than a 50 percent reduction in growth or if the lowest concentration tested (analytical detection limit) results in greater than a 50 percent reduction in growth.

(4) *Definitive test.* (i) The purpose of the definitive test is to determine the concentration response curves, the EC_{10}'s, EC_{50}'s, and EC_{90}'s for algal growth for each species tested, with a minimum amount of testing beyond the range-finding test.

(ii) Algae should be exposed to five or more concentrations of the test chemical in a geometric series in which the ratio is between 1.5 and 2.0 (e.g., 2, 4, 8, 16, 32, and 64 mg/l). Algae shall be placed in a minimum of three replicate test containers for each concentration of test chemical and control. More than three replicates may be required to provide sufficient quantities of test solution for determination of test substance concentration at the end of the test. Each test chamber should contain equal volumes of test solution and approximately 1×10^4 *Selenastrum* cells/ml or 7.7×10^4 *Skeletonema* cells/ml of test solution. The chemical concentrations should result in greater than 90 percent of algal growth being inhibited or stimulated at the highest concentrations of test substance compared to controls.

(iii) Every test shall include a control consisting of the same nutrient medium, conditions, procedures, and algae from the same culture, except that none of the test substance is added. If a carrier is present in any of the test chambers, a separate carrier control is required.

(iv) The test begins when algae from 5- to 10-day-old stock cultures are placed in the test chambers containing test solutions having the appropriate concentrations of the test substance. Algal growth in controls should reach the logarithmic growth phase by 96 hours. If logarithmic growth cannot be demonstrated, the test shall be repeated. At the end of 24, 48, 72, and 96 hours the algal growth response (number or weight of algal cells/ml) in all test containers and controls shall be determined by an indirect (spectrophotometry, electronic cell counters, dry weight, etc.) or a direct (actual microscopic cell count) method. Indirect methods shall be calibrated by a direct microscopic count. The percentage inhibition or stimulation of growth for each concentration, EC_{10}, EC_{50}, EC_{90} and the concentration-response curves are determined from these counts.

(v) At the end of the definitive test, the following additional analyses of algal growth response shall be performed:

(A) Determine whether the altered growth response between controls and test algae was due to a change in relative cell numbers, cell sizes or both. Also note any unusual cell shapes,

color differences, flocculations, adherence of algae to test containers, or aggregation of algal cells.

(B) In test concentrations where growth is maximally inhibited, algistatic effects may be differentiated from algicidal effects by the following two methods for *Skeletonema* and by the second method for *Selenastrum.*

(*1*) Add 0.5 ml of a 0.1 percent solution (weight/volume) of Evans blue stain to a 1 milliliter aliquot of algae from a control container and to a 1 milliliter aliquot of algae from the test container having the lowest concentration of test chemical which completely inhibited algal growth (if algal growth was not completely inhibited, select an aliquot of algae for staining from the test container having the highest concentration of test chemical which inhibited algal growth). Wait 10 to 30 minutes, examine microscopically, and determine the percent of the cells which stain blue (indicating cell mortality). A staining control shall be performed concurrently using heat-killed or formaldehyde-preserved algal cells; 100 percent of these cells shall stain blue.

(*2*) Remove 0.5 ml aliquots of test solution containing growth-inhibited algae from each replicate test container having the concentration of test substance evaluated in paragraph (c)(4)(v)(B)(*1*) of this section. Combine these aliquots into a new test container and add a sufficient volume of fresh nutrient medium to dilute the test chemical to a concentration which does not affect growth. Incubate this subculture under the environmental conditions used in the definitive test for a period of up to 9 days, and observe for algal growth to determine if the algistatic effect noted after the 96-hour test is reversible. This subculture test may be discontinued as soon as growth occurs.

(5) [Reserved]

(6) *Analytical measurements*—(i) *Chemical.* (A) Glass distilled or deionized water shall be used in the preparation of the nutrient medium. The pH of the test solution shall be measured in the control and test containers at the beginning and at the end of the definitive test. The concentration of test chemical in the test containers shall be determined at the beginning and end of the definitive test by standard analytical methods which have been validated prior to the test. An analytical method is unacceptable if likely degradation products of the chemical, such as hydrolysis and oxidation products, give positive or negative interference.

(B) At the end of the test and after aliquots have been removed for algal growth-response determinations, microscopic examination, mortal staining, or subculturing, the replicate test containers for each chemical concentration may be pooled into one sample. An aliquot of the pooled sample may then be taken and the concentration of test chemical determined. In addition, the concentration of test chemical associated with the algae alone should be determined. Separate and concentrate the algal cells from the test solution by centrifuging or filtering the remaining pooled sample and measure the test substance concentration in the algal-cell concentrate.

(ii) *Numerical.* Algal growth response (as percent of inhibition or stimulation in the test solutions compared to the controls) is calculated at the end of the test. Mean and standard deviation should be calculated and plotted for each treatment and control. Appropriate statistical analyses should provide a goodness-of-fit determination for the concentration response curves. The concentration response curves are plotted using the mean measured test solution concentrations obtained at the end of the test.

(d) *Test conditions*—(1) *Test species.* Species of algae recommended as test organisms for this test are the freshwater green alga, *Selenastrum capricornutum,* and the marine diatom, *Skeletonema costatum.* Algae to be used in acute toxicity tests may be initially obtained from commercial sources and subsequently cultured using sterile technique. Toxicity testing shall not be performed until algal cultures are shown to be actively growing (i.e., capable of logarithmic growth within the test period) in at least 2 subcultures lasting 7 days each prior to the start of the definitive test. All algae used for a particular test shall be from the same source and the same stock culture.

Test algae shall not have been used in a previous test, either in a treatment or a control.

(2) *Facilities*—(i) *General.* (A) Facilities needed to perform this test include: a growth chamber or a controlled environment room that can hold the test containers and will maintain the air temperature, lighting intensity and photoperiod specified in this test guideline; apparatus for culturing and enumerating algae; a source of distilled and/or deionized water; and apparatus for carrying out analyses of the test chemical.

(B) Disposal facilities should be adequate to accommodate spent glassware, algae and test solutions at the end of the test and any bench covering, lab clothing, or other contaminated materials.

(ii) *Test containers.* Erlenmeyer flasks should be used for test containers. The flasks may be of any volume between 125 and 500 ml as long as the same size is used throughout a test and the test solution volume does not exceed 50 percent of the flask volume.

(iii) *Cleaning and sterilization.* New test containers may contain substances which inhibit growth of algae. They shall therefore be cleaned thoroughly and used several times to culture algae before being used in toxicity testing. All glassware used in algal culturing or testing shall be cleaned and sterilized prior to use according to standard good laboratory practices.

(iv) *Conditioning.* Test containers should be conditioned by a rinse with the appropriate test solutions prior to the start of the test. Decant and add fresh test solutions after an appropriate conditioning period for the test chemical.

(v) *Nutrient medium.* (A) Formulation and sterilization of nutrient medium used for algal culture and preparation of test solutions should conform to those currently recommended by the U.S. EPA for freshwater and marine algal bioassays. No chelating agents are to be included in the nutrient medium used for test solution preparation. Nutrient medium should be freshly prepared for algal testing and may be dispensed in appropriate volumes in test containers and sterilized by autoclaving or filtration. The pH of the nutrient medium shall be 7.5 (±0.1) for *Selenastrum* and 8.1 (±0.1) for *Skeletonema* at the start of the test and may be adjusted prior to test chemical addition with 0.1N NaOH or HC1.

(B) Dilution water used for preparation of nutrient medium and test solutions should be filtered, deionized or glass distilled. Saltwater for marine algal nutrient medium and test solutions should be prepared by adding a commercial, synthetic, sea salt formulation or a modified synthetic seawater formulation to distilled/deionized water to a concentration of 30 parts per thousand.

(vi) *Carriers.* Nutrient medium shall be used in making stock solutions of the test chemical. If a carrier other than nutrient medium is absolutely necessary to dissolve the chemical, the volume used shall not exceed the minimum volume necessary to dissolve or suspend the chemical in the test solution.

(3) *Test parameters.* (i) The test temperature shall be 24 °C for *Selenastrum* and 20 °C for *Skeletonema.* Excursions from the test temperature shall be no greater than ±2 °C. Temperature should be recorded hourly during the test.

(ii) Test chambers containing *Selenastrum* shall be illuminated continuously and those containing *Skeletonema* shall be provided a 14-hour light and 10-hour dark photoperiod with a 30 minute transition period under fluorescent lamps providing 300 ± 25 uEin/m^2 sec (approximately 400 ft-c) measured adjacent to the test chambers at the level of test solution.

(iii) Stock algal cultures should be shaken twice daily by hand. Test containers shall be placed on a rotary shaking apparatus and oscillated at approximately 100 cycles/minute for *Selenastrum* and at approximately 60 cycles/minute for *Skeletonema* during the test. The rate of oscillation should be determined at least once daily during testing.

(iv) The pH of nutrient medium in which algae are subcultured shall be 7.5 (±0.1) for *Selenastrum* and 8.1 (±0.1) for *Skeletonema,* and is not adjusted after the addition of the algae. The pH of all test solutions shall be measured at the beginning and end of the test.

(v) Light intensity shall be monitored at least daily during the test at the level of the test solution.

(e) *Reporting.* The sponsor shall submit to the EPA all data developed by the test that are suggestive or predictive of acute phytotoxicity. In addition to the general reporting requirements prescribed in part 792—*Good Laboratory Practice Standards of this Chapter,* the following shall be reported:

(1) Detailed information about the test organisms, including the scientific name, method of verification, and source.

(2) A description of the test chambers and containers, the volumes of solution in the containers, the way the test was begun (e.g., conditioning, test substance additions, etc.), the number of replicates, the temperature, the lighting, and method of incubation, oscillation rates, and type of apparatus.

(3) The concentration of the test chemical in the control and in each treatment at the end of the test and the pH of the solutions.

(4) The number of algal cells per milliliter in each treatment and control and the method used to derive these values at the beginning, 24, 48, and 72 hours, and end of the test; the percentage of inhibition or stimulation of growth relative to controls; and other adverse effect in the control and in each treatment.

(5) The 96-hour EC_{10}, EC_{50}, and EC_{90} values, and when sufficient data have been generated, the 24, 48, and 72 hour LC_{50}'s and 95 percent confidence limits, the methods used to derive these values, the data used to define the shape of the concentration-response curve and the goodness-of-fit determination.

(6) Methods and data records of all chemical analyses of water quality and test substance concentrations, including method validations and reagent blanks.

(7) The results of any optional analyses such as: Microscopic appearance of algae, size or color changes, percent mortality of cells and the fate of subcultured cells, the concentration of test substance associated with algae and test solution supernate or filtrate.

(8) If the range-finding test showed that the highest concentration of the chemical tested (not less than 1000 mg/l or saturation concentration) had no effect on the algae, report the results and concentration and a statement that the chemical is of minimum phytotoxic concern.

(9) If the range-finding test showed greater than a 50 percent inhibition of algal growth at a test concentration below the analytical detection limit, report the results, concentration, and a statement that the chemical is phytotoxic below the analytical detection limit.

[50 FR 39321, Sept. 27, 1985, as amended at 52 FR 19058, May 20, 1987]

§ 797.1300 Daphnid acute toxicity test.

(a) *Purpose.* This guideline is intended for use in developing data on the acute toxicity of chemical substances and mixtures (''chemicals'') subject to environmental effects test regulations under the Toxic Substances Control Act (TSCA) (Pub. L. 94–469, 90 Stat. 2003, 15 U.S.C. 2601 *et seq.*). This guideline prescribes an acute toxicity test in which daphnids (*Daphnia magna* or *D. pulex*) are exposed to a chemical in static and flow-through systems. The United States Environmental Protection Agency will use data from this test in assessing the hazard a chemical may present in the aquatic environment.

(b) *Definitions.* The definitions in section 3 of the Toxic Substances Control Act (TSCA) and part 792—*Good Laboratory Practice Standards* of this chapter apply to this test guideline. In addition, the following definitions apply to this guideline:

(1) *Brood stock* means the animals which are cultured to produce test organisms through reproduction.

(2) EC_{50} means that experimentally derived concentration of test substance in dilution water that is calculated to affect 50 percent of a test population during continuous exposure over a specified period of time. In this guideline, the effect measured is immobilization.

(3) *Ephippium* means a resting egg which develops under the carapace in response to stress conditions in daphnids.

(4) *Flow-through* means a continuous or an intermittent passage of test solution or dilution water through a test

chamber or culture tank with no recycling.

(5) *Immobilization* means the lack of movement by the test organisms except for minor activity of the appendages.

(6) *Loading* means the ratio of daphnid biomass (grams, wet weight) to the volume (liters) of test solution in a test chamber at a point in time, or passing through the test chamber during a specific interval.

(7) *Static system* means a test system in which the test solution and test organisms are placed in the test chamber and kept there for the duration of the test without renewal of the test solution.

(c) *Test procedures*—(1) *Summary of the test.* (i) Test chambers are filled with appropriate volumes of dilution water. In the flow-through test, the flow of dilution water through each chamber is adjusted to the rate desired. The test chemical is introduced into each treatment chamber. The addition of test chemical in the flow-through system is conducted at a rate which is sufficient to establish and maintain the desired concentration in the test chamber. The test is started within 30 minutes after the test chemical has been added and uniformly distributed in static test chambers or after the concentration of test chemical in each flow-through test chamber reaches the prescribed level and remains stable. At the initiation of the test, daphnids which have been cultured and acclimated in accordance with the test design are randomly placed into the test chambers. Daphnids in the test chambers are observed periodically during the test, the immobile daphnids removed, and the findings recorded.

(ii) Dissolved oxygen concentration, pH, temperature, the concentration of test chemical and other water quality parameters are measured at specified intervals in selected test chambers. Data are collected during the test to develop concentration-response curves and determine EC_{50} values for the test chemical.

(2) [Reserved]

(3) *Range-finding test.* (i) A range-finding test should be conducted to establish test solution concentrations for the definitive test.

(ii) The daphnids should be exposed to a series of widely spaced concentrations of the test chemical (e.g., 1, 10, 100 mg/1, etc.), usually under static conditions.

(iii) A minimum of five daphnids should be exposed to each concentration of test chemical for a period of 48 hours. The exposure period may be shortened if data suitable for the purpose of the range-finding test can be obtained in less time. No replicates are required and nominal concentrations of the chemical are acceptable.

(4) *Definitive test.* (i) The purpose of the definitive test is to determine the concentration-response curves and the 24- and 48-hour EC_{50} values with the minimum amount of testing beyond the range-finding test.

(ii) A minimum of 20 daphnids per concentration shall be exposed to five or more concentrations of the chemical chosen in a geometric series in which the ratio is between 1.5 and 2.0 (e.g., 2, 4, 8, 16, 32, and 64 mg/l). An equal number of daphnids shall be placed in two or more replicates. If solvents, solubilizing agents or emulsifiers have to be used, they shall be commonly used carriers and shall not possess a synergistic or antagonistic effect on the toxicity of the test chemical. The concentration of solvent should not exceed 0.1 mg/l. The concentration ranges shall be selected to determine the concentration-response curves and EC_{50} values at 24 and 48 hours. Concentration of test chemical in test solutions should be analyzed prior to use.

(iii) Every test shall include controls consisting of the same dilution water, conditions, procedures and daphnids from the same population (culture container), except that none of the chemical is added.

(iv) The dissolved oxygen concentration, temperature and pH shall be measured at the beginning and end of the test in each chamber.

(v) The test duration is 48 hours. The test is unacceptable if more than 10 percent of the control organisms are immobilized during the 48-hour test period. Each test chamber shall be checked for immobilized daphnids at 24 and 48 hours after the beginning of the test. Concentration-response curves and 24-hour and 48-hour EC_{50} values for

immobilization shall be determined along with their 95 percent confidence limits.

(vi) In addition to immobility, any abnormal behavior or appearance shall also be reported.

(vii) Test organisms shall be impartially distributed among test chambers in such a manner that test results show no significant bias from the distributions. In addition, test chambers within the testing area shall be positioned in a random manner or in a way in which appropriate statistical analyses can be used to determine the variation due to placement.

(viii) The concentration of the test chemical in the chambers should be measured as often as is feasible during the test. In the static test the concentration of test chemical shall be measured, at a minimum, at the beginning of the test and at the end of the test in each test chamber. In the flow-through test the concentration of test chemical shall be measured at a minimum:

(A) In each chamber at the beginning of the test and at 48 hours after the start of the test;

(B) In at least one appropriate chamber whenever a malfunction is detected in any part of the test substance delivery system.

Among replicate test chambers of a treatment concentration, the measured concentration of the test chemical shall not vary more than ±20 percent.

(5) [Reserved]

(6) *Analytical measurements.* (i) *Test chemical.* Deionized water should be used in making stock solutions of the test chemical. Standard analytical methods should be used whenever available in performing the analyses. The analytical method used to measure the amount of test chemical in a sample shall be validated before beginning the test by appropriate laboratory practices. Any analytical method is not acceptable if likely degradation products of the test chemical, such as hydrolysis and oxidation products, give positive or negative interferences which cannot be systematically identified and corrected mathematically.

(ii) *Numerical.* The number of immobilized daphnids shall be counted during each definitive test. Appropriate statistical analyses should provide a goodness-of-fit determination for the concentration-response curves. A 24- and 48-hour EC_{50} and corresponding 95 percent interval shall be calculated.

(d) *Test conditions*—(1) *Test species*—(i) *Selection.* (A) The cladocerans, *Daphnia magna* or *D. pulex,* are the test species to be used in this test. Either species may be used for testing of a particular chemical. The species identity of the test organisms should be verified using appropriate systematic keys. First instar daphnids, ≦24 hours old, are to be used to start the test.

(B) Daphnids to be used in acute toxicity tests should be cultured at the test facility. Records should be kept regarding the source of the initial stock and culturing techniques. All organisms used for a particular test shall have originated from the same culture population.

(C) Daphnids shall not be used for a test (*1*) if cultures contain ephippia; (*2*) if adults in the cultures do not produce young before day 12; (*3*) if more than 20 percent of the culture stock die during the 2 days preceding the test; (*4*) if adults in the culture do not produce an average of at least 3 young per adult per day over the 7-day period prior to the test and (*5*) if daphnids have been used in any portion of a previous test, either in a treatment or in a control.

(ii) *Acclimation.* (A) Brood daphnids shall be maintained in 100-percent dilution water at the test temperature for at least 48 hours prior to the start of the test. This is easily accomplished by culturing them in the dilution water at the test temperature. During production of neonates, daphnids should not be fed.

(B) During culturing and acclimation to the dilution water, daphnids should be maintained in facilities with background colors and light intensities similar to those of the testing area.

(iii) *Care and handling.* (A) Daphnids should be cultured in dilution water under similar environmental conditions to those used in the test. Organisms should be handled as little as possible. When handling is necessary it should be done as gently, carefully, and quickly as possible. During culturing and acclimation, daphnids should be observed carefully for ephippia and

other signs of stress, physical damage and mortality. Dead and abnormal individuals shall be discarded. Organisms that touch dry surfaces or are dropped or injured in handling shall be discarded.

(B) Smooth glass tubes (I.D. greater than 5 mm) equipped with rubber bulb should be used for transferring daphnids with minimal culture media carry-over. Care should be exercised to introduce the daphnids below the surface of any solution to avoid trapping air under the carapace.

(iv) *Feeding.* A variety of foods (e.g., unicellular green algae) have been demonstrated to be adequate for daphnid culture. Daphnids shall not be fed during testing.

(2) *Facilities*—(i) *Apparatus.* (A) Facilities needed to perform this test include: (*1*) Containers for culturing and acclimating daphnids; (*2*) a mechanism for controlling and maintaining the water temperature during the culturing, acclimation, and test periods; (*3*) apparatus for straining particulate matter, removing gas bubbles, or aerating the water as necessary; and (*4*) an apparatus for providing a 16-hour light and 8-hour dark photoperiod with a 15 to 30 minute transition period. In addition, the flow-through system shall contain appropriate test chambers in which to expose daphnids to the test chemical and an appropriate test substance delivery system.

(B) Facilities should be well ventilated and free of fumes and disturbances that may affect the test organisms.

(C) Test chambers shall be loosely covered to reduce the loss of test solution or dilution water due to evaporation and to minimize the entry of dust or other particulates into the solutions.

(ii) *Construction materials.* (A) Materials and equipment that contact test solutions should be chosen to minimize sorption of test chemicals from the dilution water and should not contain substances that can be leached into aqueous solution in quantities that can affect the test results.

(B) For static tests, daphnids can be conveniently exposed to the test chemical in 250 ml beakers or other suitable containers.

(C) For flow-through tests, daphnids can be exposed in glass or stainless steel containers with stainless steel or nylon screen bottoms. The containers should be suspended in the test chamber in such a manner to insure that the test solution flows regularly into and out of the container and that the daphnids are always submerged in at least 5 centimeters of test solution. Test chambers can be constructed using 250 ml beakers or other suitable containers equipped with screened overflow holes, standpipes or V-shaped notches.

(iii) *Dilution water.* (A) Surface or ground water, reconstituted water or dechlorinated tap water are acceptable as dilution water if daphnids will survive in it for the duration of the culturing, acclimation and testing periods without showing signs of stress. The quality of the dilution water should be constant and should meet the following specifications:

Substance	Maximum concentration
Particulate matter	20 mg/liter.
Total organic carbon or	2 mg/liter.
Chemical oxygen demand	5 mg/liter.
Un-ionized ammonia	1 μ g/liter.
Residual chlorine	<3 μ g/liter.
Total organophosphorus pesticides	50 ng/liter.
Total organochlorine pesticides plus polychlorinated biphenyls (PCBs) or.	50 ng/liter.
Organic chlorine	25 ng/liter.

(B) The above water quality parameters under paragraph (d)(2)(iii)(A) of this section shall be measured at least twice a year or whenever it is suspected that these characteristics may have changed significantly. If dechlorinated tap water is used, daily chlorine analysis shall be performed.

(C) If the diluent water is from a ground or surface water source, conductivity and total organic carbon (TOC) or chemical oxygen demand (COD) shall be measured. Reconstituted water can be made by adding specific amounts of reagent-grade chemicals to deionized or distilled water. Glass distilled or carbon-filtered deionized water with a conductivity less than 1 μohm/cm is acceptable as the diluent for making reconstituted water.

(iv) *Cleaning.* All test equipment and test chambers shall be cleaned before

each use using standard laboratory procedures.

(v) *Test substance delivery system.* In flow-through tests, proportional diluters, metering pump systems, or other suitable devices should be used to deliver test chemical to the test chambers. The system shall be calibrated before each test. Calibration includes determining the flow rate through each chamber and the concentration of the test chemical in each chamber. The general operation of the test substance delivery system should be checked twice during a test. The 24-hour flow through a test chamber shall be equal to at least 5 times the volume of the test chamber. During a test, the flow rates should not vary more than 10 percent from any one test chamber to another.

(3) *Test parameters.* Environmental parameters of the water contained in test chambers shall be maintained as specified below:

(i) The test temperature shall be 20 °C. Excursions from the test temperature shall be no greater than ±2 °C.

(ii) Dissolved oxygen concentration between 60 and 105 percent saturation. Aeration, if needed to achieve this level, shall be done before the addition of the test chemical. All treatment and control chambers shall be given the same aeration treatment.

(iii) The number of daphnids placed in a test chamber shall not affect test results. Loading shall not exceed 40 daphnids per liter test solution in the static system. In the flow-through test, loading limits will vary depending on the flow rate of dilution water. Loading shall not cause the dissolved oxygen concentration to fall below the recommended levels.

(iv) Photoperiod of 16 hours light and 8 hours darkness.

(e) *Reporting.* The sponsor shall submit to the U.S. EPA all data developed by the test that are suggestive or predictive of acute toxicity and all concomitant gross toxicological manifestations. In addition to the reporting requirements prescribed in part 792—*Good Laboratory Practice Standards* of this chapter, the reporting of test data shall include the following:

(1) The name of the test, sponsor, testing laboratory, study director, principal investigator, and dates of testing.

(2) A detailed description of the test chemical including its source, lot number, composition (identity and concentration or major ingredients and major impurities), known physical and chemical properties and any carriers or other additives used and their concentrations.

(3) The source of the dilution water, its chemical characteristics (e.g., conductivity, hardness, pH, etc.) and a description of any pretreatment.

(4) Detailed information about the daphnids used as brood stock, including the scientific name and method of verification, age, source, treatments, feeding history, acclimation procedures, and culture method. The age of the daphnids used in the test shall be reported.

(5) A description of the test chambers, the volume of solution in the chambers, the way the test was begun (e.g., conditioning, test chemical additions), the number of test organisms per test chamber, the number of replicates per treatment, the lighting, the method of test chemical introduction or the test substance delivery system and the flow rate (in flow-through test) expressed as volume additions per 24 hours.

(6) The concentration of the test chemical in each test chamber at times designated for static and flow-through tests.

(7) The number and percentage of organisms that were immobilized or showed any adverse effects in each test chamber at each observation period.

(8) Utilizing the average measured test chemical concentration, concentration-response curves should be fitted to immobilization data at 24 and 48 hours. A statistical test of goodness-of-fit should be performed and the results reported.

(9) The 24- and 48-hour EC_{50} values and their respective 95 percent confidence limits using the mean measured test chemical concentration and the methods used to calculate both the EC_{50} values and their confidence limits.

(10) All chemical analyses of water quality and test chemical concentrations, including methods, method validations and reagent blanks.

(11) The data records of the culture, acclimation and test temperatures.

(12) Any deviation from this test guideline and anything unusual about the test, e.g., diluter failure, temperature fluctuations, etc.

[50 FR 39321, Sept. 27, 1985, as amended at 52 FR 19059, May 20, 1987]

§ 797.1330 Daphnid chronic toxicity test.

(a) *Purpose.* This guideline is intended for use in developing data on the chronic toxicity of chemical substances and mixtures (''chemicals'') subject to environmental effects test regulations under the Toxic Substances Control Act (TSCA) (Pub. L. 94–469, 90 Stat. 2003, 15 U.S.C. 2601 *et seq.*). This guideline prescribes a chronic toxicity test in which daphnids are exposed to a chemical in a renewal or a flow-through system. The United States Environmental Protection Agency will use data from this test in assessing the hazard a chemical may present to the aquatic environment.

(b) *Definitions.* The definitions in section 3 of the Toxic Substances Control Act (TSCA), and the definitions in part 792 *Good Laboratory Practice Standards* of this chapter apply to this test guideline. In addition, the following definitions apply to this guideline:

(1) *Brood stock* means the animals which are cultured to produce test organisms through reproduction.

(2) *Chronic toxicity test* means a method used to determine the concentration of a substance in water that produces an adverse effect on a test organism over an extended period of time. In this test guideline, mortality and reproduction (and optionally, growth) are the criteria of toxicity.

(3) EC_{50} means that experimentally derived concentration of test substance in dilution water that is calculated to affect 50 percent of a test population during continuous exposure over a specified period of time. In this guideline, the effect measured is immobilization.

(4) *Ephippium* means a resting egg which develops under the carapace in response to stress conditions in daphnids.

(5) *Flow-through* means a continuous or intermittent passage of test solution or dilution water through a test chamber or culture tank with no recycling.

(6) *Immobilization* means the lack of movement by daphnids except for minor activity of the appendages.

(7) *Loading* means the ratio of daphnid biomass (grams, wet weight) to the volume (liters) of test solution in a test chamber at a point in time or passing through the test chamber during a specific interval.

(8) *MATC (Maximum Acceptable Toxicant Concentration)* means the maximum concentration at which a chemical can be present and not be toxic to the test organism.

(9) *Renewal system* means the technique in which test organisms are periodically transferred to fresh test solution of the same composition.

(c) *Test procedures*—(1) *Summary of the test.* (i) Test chambers are filled with appropriate volumes of dilution water. In the flow-through test the flow of dilution water through each chamber is then adjusted to the rate desired. The test substance is introduced into each test chamber. The addition of test substance in the flow-through system is done at a rate which is sufficient to establish and maintain the desired concentration of test substance in the test chamber.

(ii) The test is started within 30 minutes after the test substance has been added and uniformly distributed in the test chambers in the renewal test or after the concentration of test substance in each test chamber of the flow-through test system reaches the prescribed level and remains stable. At the initiation of the test, daphnids which have been cultured or acclimated in accordance with the test design, are randomly placed into the test chambers. Daphnids in the test chambers are observed periodically during the test, immobile adults and offspring produced are counted and removed, and the findings are recorded. Dissolved oxygen concentration, pH, temperature, the concentration of test substance, and other water quality parameters are measured at specified intervals in selected test chambers. Data are collected during the test to determine any significant differences ($p \leqq 0.05$) in immobilization and reproduction as compared to the control.

(2) [Reserved]

(3) *Range-finding test.* (i) A range-finding test should be conducted to establish test solution concentrations for the definitive test.

(ii) The daphnids should be exposed to a series of widely spaced concentrations of the test substance (e.g., 1, 10, 100 mg/l), usually under static conditions.

(iii) A minimum of five daphnids should be exposed to each concentration of test substance for a period of time which allows estimation of appropriate chronic test concentrations. No replicates are required and nominal concentrations of the chemical are acceptable.

(4) *Definitive test.* (i) The purpose of the definitive test is to determine concentration-response curves, EC_{50} values and effects of a chemical on immobilization and reproduction during chronic exposure.

(ii) A minimum of 20 daphnids per concentration shall be exposed to five or more concentrations of the chemical chosen in a geometric series in which the ratio is between 1.5 and 2.0 (e.g., 2, 4, 8, 16, 32, 64 mg/l). An equal number of daphnids shall be placed in two or more replicates. The concentration ranges shall be selected to determine the concentration-response curves, EC_{50} values and MATC. Solutions shall be analyzed for chemical concentration at designated times during the test.

(iii) Every test shall include controls consisting of the same dilution water, conditions, procedures and daphnids from the same population (culture container), except that none of the chemical is added.

(iv) The test duration is 21 days. The test is unacceptable if:

(A) More than 20 percent of the control organisms appear to be immobilized, stressed or diseased during the test.

(B) Each control daphnid living the full 21 days produces an average of less than 60 young.

(C) Any ephippia are produced by control animals.

(v) The number of immobilized daphnids in each chamber shall be recorded on day 21 of the test. After offspring are produced, they shall be counted and removed from the test chambers every 2 or 3 days. Concentration-response curves, EC_{50} values and associated 95 percent confidence limits for adult immobilization shall be determined for day 21. An MATC shall be determined for the most sensitive test criteria measured (number of adult animals immobilized, number of young per adult, and number of immobilized young per adult).

(vi) In addition to immobility, any abnormal behavior or appearance shall also be reported.

(vii) Test organisms shall be impartially distributed among test chambers in such a manner that test results show no significant bias from the distributions. In addition, test chambers within the testing area shall be positioned in a random manner as in a way in which appropriate statistical analyses can be used to determine the variation due to placement.

(5) [Reserved]

(6) *Analytical measurements.* (i) *Test chemical.* Deionized water should be used in making stock solutions of the test substance. Standard analytical methods should be used whenever available in performing the analyses. The analytical method used to measure the amount of test substance in a sample shall be validated before beginning the test by appropriate laboratory practices. An analytical method is not acceptable if likely degradation products of the test substance, such as hydrolysis and oxidation products, give positive or negative interferences which cannot be systematically identified and corrected mathematically.

(ii) *Numerical.* The number of immobilized adults, total offspring per adult, and immobilized offspring per adult shall be counted during each test. Appropriate statistical analyses should provide a goodness-of-fit determination for the adult immobilization concentration-response curves calculated on day 21. A 21-day EC_{50} based on adult immobilization and corresponding 95 percent confidence intervals shall also be calculated. Appropriate statistical tests (e.g., analysis of variance, mean separation test) should be used to test for significant chemical effects on chronic test criteria (cumulative number of immobilized adults, cumulative

number of offspring per adult and cumulative number of immobilized offspring per adult) on day 21. An MATC shall be calculated using these chronic test criteria.

(d) *Test conditions*—(1) *Test species*—(i) *Selection*. (A) The cladocerans, *Daphnia magna* or *D. pulex*, are the species to be used in this test. Either species can be utilized for testing of a particular chemical. The species identity of the test organisms should be verified using appropriate systematic keys.

(B) First instar daphnids, ≦24 hours old, are to be used to start the test.

(ii) *Acquisition*. (A) Daphnids to be used in chronic toxicity tests should be cultured at the test facility. Records should be kept regarding the source of the initial stock and culturing techniques. All organisms used for a particular test shall have originated from the same culture population.

(B) Daphnids shall not be used for a test if:

(*1*) Cultures contain ephippia.

(*2*) Adults in the cultures do not produce young before day 12.

(*3*) More than 20 percent of the culture stock die in the 2 days preceding the test.

(*4*) Adults in the culture do not produce an average of at least 3 young per adult per day over the 7-day period prior to the test.

(*5*) Daphnids have been used in any portion of a previous test either in a treatment or in a control.

(iii) *Feeding*. (A) During the test the daphnids shall be fed the same diet and with the same frequency as that used for culturing and acclimation. All treatments and control(s) shall receive, as near as reasonably possible, the same ration of food on a per-animal basis.

(B) The food concentration depends on the type used. Food concentrations should be sufficient to support normal growth and development and to allow for asexual (parthenogenic) reproduction. For automatic feeding devices, a suggested rate is 5 to 7 mg food (either solids or algal cells, dry weight) per liter dilution water or test solution. For manual once-a-day feeding, a suggested rate is 15 mg food (dry weight) per liter dilution water or test solution.

(iv) *Loading*. The number of test organisms placed in a test chamber shall not affect test results. Loading shall not exceed 40 daphnids per liter in the renewal system. In the flow-through test, loading limits will vary depending on the flow rate of the dilution water. Loading shall not cause the dissolved oxygen concentration to fall below the recommended level.

(v) *Care and handling of test organisms*. (A) Daphnids should be cultured in dilution water under similar environmental conditions to those used in the test. A variety of foods have been demonstrated to be adequate for daphnid culture. They include algae, yeasts and a variety of mixtures.

(B) Organisms should be handled as little as possible. When handling is necessary it should be done as gently, carefully, and quickly as possible. During culturing and acclimation, daphnids should be observed carefully for ephippia and other signs of stress, physical damage, and mortality. Dead and abnormal individuals shall be discarded. Organisms that touch dry surfaces or are dropped or injured during handling shall be discarded.

(C) Smooth glass tubes (I.D. greater than 5mm) equipped with a rubber bulb can be used for transferring daphnids with minimal culture media carryover.

(D) Care should be exercised to introduce the daphnids below the surface of any solution so as not to trap air under the carapace.

(vi) *Acclimation*. (A) Brood daphnids shall be maintained in 100 percent dilution water at the test temperature for at least 48 hours prior to the start of the test. This is easily accomplished by culturing them in dilution water at the test temperature. During acclimation, daphnids shall be fed the same food as will be used for the definitive test.

(B) During culturing and acclimation to the dilution water, daphnids should be maintained in facilities with background colors and light intensities similar to those of the testing area.

(2) *Facilities*—(i) *General*. (A) Facilities needed to perform this test include:

(*1*) Containers for culturing and acclimating daphnids.

(*2*) A mechanism for controlling and maintaining the water temperature during the culturing, acclimation and test periods.

(*3*) Apparatus for straining particulate matter, removing gas bubbles, or aerating the water when water supplies contain particulate matter, gas bubbles, or insufficient dissolved oxygen, respectively.

(*4*) An apparatus for providing a 16-hour light and 8-hour dark photoperiod.

(*5*) An apparatus to introduce food if continuous or intermittent feeding is used.

(*6*) In addition, the flow-through test shall contain appropriate test chambers in which to expose daphnids to the test substance and an appropriate test substance delivery system.

(B) Facilities should be well ventilated and free of fumes and other disturbances that may affect the test organisms.

(ii) *Test chambers.* (A) Materials and equipment that contact test solutions should be chosen to minimize sorption of test chemicals from the dilution water and should not contain substances that can be leached into aqueous solution in quantities that can affect test results.

(B) For renewal tests, daphnids can be conveniently exposed to the test solution in 250 ml beakers or other suitable containers.

(C) For flow-through tests daphnids can be exposed in glass or stainless steel containers with stainless steel or nylon screen bottoms. Such containers shall be suspended in the test chamber in such a manner to ensure that the test solution flows regularly into and out of the container and that the daphnids are always submerged in at least 5 centimeters of test solution. Test chambers can be constructed using 250 ml beakers or other suitable containers equipped with screened overflow holes, standpipes or V-shaped notches.

(D) Test chambers shall be loosely covered to reduce the loss of test solution or dilution water due to evaporation and to minimize the entry of dust or other particulates into the solutions.

(iii) *Test substance delivery system.* (A) In the flow-through test, proportional diluters, metering pump systems or other suitable systems should be used to deliver the test substance to the test chambers.

(B) The test substance delivery system shall be calibrated before each test. Calibration includes determining the flow rate through each chamber and the concentration of the test substance in each chamber. The general operation of the test substance delivery system should be checked twice daily during a test. The 24-hour flow rate through a test chamber shall be equal to at least five times the volume of the test chamber. During a test, the flow rates shall not vary more than 10 percent from any one test chamber to another. For the renewal test, test substance dilution water shall be completely replaced at least once every 3 days.

(iv) *Dilution water.* (A) Surface or ground water, reconstituted water, or dechlorinated tap water are acceptable as dilution water if daphnids will survive in it for the duration of the culturing, acclimation, and testing periods without showing signs of stress. The quality of the dilution water should be constant and should meet the following specificiations:

Substance	Maximum concentration
Particulate matter	20 mg/l.
Total organic carbon or	2 mg/l.
Chemical oxygen demand	5 mg/l.
Un-ionized ammonia	20 µg/l.
Residual chlorine	<3 µg/l.
Total organophosphorus pesticides	50 ng/l.
Total organochlorine pesticides plus polychlorinated biphenyls (PCBs).	50 ng/l.
or organic chlorine	25 ng/l.

(B) The water quality characteristics listed above shall be measured at least twice a year or when it is suspected that these characteristics may have changed significantly. If dechlorinated tap water is used, daily chlorine analysis shall be performed.

(C) If the diluent water is from a ground or surface water source, conductivity and total organic carbon (TOC) or chemical oxygen demand

(COD) shall be measured. Reconstituted water can be made by adding specific amounts of reagent-grade chemicals to deionized or distilled water. Glass distilled or carbon filtered deionized water with a conductivity of less than 1 microohm/cm is acceptable as the diluent for making reconstituted water.

(D) If the test substance is not soluble in water an appropriate carrier should be used.

(v) *Cleaning of test system.* All test equipment and test chambers shall be cleaned before each use following standard laboratory procedures. Cleaning of test chambers may be necessary during the testing period.

(3) *Test parameters.* (i) Environmental conditions of the water contained in test chambers should be maintained as specified in this paragraph:

(A) The test temperature shall be 20 °C. Excursions from the test temperature shall be no greater than ±2 °C.

(B) Dissolved oxygen concentration between 60 and 105 percent saturation. Aeration, if needed to achieve this level, shall be done before the addition of the test substance. All treatment and control chambers shall be given the same aeration treatment.

(C) Photoperiod of 16-hours light and 8-hours darkness.

(ii) Additional measurements include:

(A) The concentration of the test substance in the chambers shall be measured during the test.

(B) At a minimum, the concentration of test substance should be measured as follows:

(*1*) In each chamber before the test.

(*2*) In each chamber on days 7, 14, and 21 of the test.

(*3*) In at least one appropriate chamber whenever a malfunction is detected in any part of the test substance delivery system. Equal aliquots of test solution may be removed from each replicate chamber and pooled for analysis. Among replicate test chambers of a treatment concentration, the measured concentration of the test substance should not vary more than 20 percent.

(*4*) An apparatus for providing a 16-hour light and 8-hour dark photoperiod.

(C) The dissolved oxygen concentration, temperature and pH shall be measured at the beginning of the test and on days 7, 14, and 21 in at least two chambers of the high, middle, low, and control test concentrations.

(e) *Reporting.* The sponsor shall submit to the U.S. Environmental Protection Agency all data developed by the test that are suggestive or predictive of chronic toxicity and all associated toxicologic manifestations. In addition to the reporting requirements prescribed in the part 792—*Good Laboratory Practice Standards* of this chapter the reporting of test data shall include the following:

(1) The name of the test, sponsor, testing laboratory, study director, principal investigator, and dates of testing.

(2) A detailed description of the test substance including its source, lot number, composition (identity and concentration of major ingredients and major impurities), known physical and chemical properties, and any carriers or other additives used and their concentrations.

(3) The source of the dilution water, its chemical characteristics (e.g., conductivity, hardness, pH), and a description of any pretreatment.

(4) Detailed information about the daphnids used as brood stock, including the scientific name and method of verification, age, source, treatments, feeding history, acclimation procedures, and culture methods. The age of the daphnids used in the test shall be reported.

(5) A description of the test chambers, the volume of solution in the chambers, the way the test was begun (e.g., conditioning, test substance additions), the number of test organisms per test chamber, the number of replicates per treatment, the lighting, the renewal process and schedule for the renewal chronic test, the test substance delivery system and flow rate expressed as volume additions per 24 hours for the flow-through chronic test, and the method of feeding (manual or continuous) and type of food.

(6) The concentration of the test substance in test chambers at times designated for renewal and flow-through tests.

(7) The number and percentage of organisms that show any adverse effect in each test chamber at each observation period.

(8) The cumulative adult and offspring immobilization values and the progeny produced at designated observation times, the time (days) to first brood and the number of offspring per adult in the control replicates and in each treatment replicate.

(9) All chemical analyses of water quality and test substance concentrations, including methods, method validations and reagent blanks.

(10) The data records of the culture, acclimation, and test temperatures.

(11) Any deviation from this test guideline, and anything unusual about the test, (e.g., dilution failure, temperature fluctuations).

(12) The MATC to be reported is calculated as the geometric mean between the lowest measured test substance concentration that had a significant ($p \leqq 0.05$) effect and the highest measured test substance concentration that had no significant ($p \leqq 0.05$) effect on day 21 of the test. The most sensitive of the test criteria (number of adult animals immobilized, the number of young per female and the number of immobilized young per female) is used to calculate the MATC. The criterion selected for MATC computation is the one which exhibits an effect (a statistically significant difference between treatment and control groups; $p \leqq 0.05$) at the lowest test substance concentration for the shortest period of exposure. Appropriate statistical tests (analysis of variance, mean separation test) shall be used to test for significant test substance effects. The statistical tests employed and the results of these tests shall be reported.

(13) Concentration-response curves utilizing the average measured test substance concentration shall be fitted to cumulative adult immobilization data at 21 days. A statistical test of goodness-of-fit shall be performed and the results reported.

(14) An EC_{50} value based on adult immobilization with corresponding 95 percent confidence limits when sufficient data are present for day 21. These calculations shall be made using the average measured concentration of the test substance.

[50 FR 39321, Sept. 27, 1985, as amended at 52 FR 19060, May 20, 1987]

§ 797.1400 Fish acute toxicity test.

(a) *Purpose.* This guideline may be used to develop data on the acute toxicity of chemical substances and mixtures (''chemicals'') subject to environmental effects test regulations under the Toxic Substances Control Act (TSCA) (Pub. L. 94–469, 90 Stat. 2003, 15 U.S.C. 2601 *et seq.*). This guideline prescribes tests to be used to develop data on the acute toxicity of chemicals to fish. The United States Environmental Protection Agency (EPA) will use data from these tests in assessing the hazard of a chemical to the environment.

(b) *Definitions.* The definitions in section 3 of the Toxic Substances Control Act (TSCA), and the definitions in part 792—*Good Laboratory Practice Standards* of this chapter apply to this test guideline. The following definitions also apply to this guideline:

(1) *Acclimation* means the physiological compensation by test organisms to new environmental conditions (e.g., temperature, hardness, pH).

(2) *Acute toxicity test* means a method used to determine the concentration of a substance that produces a toxic effect on a specified percentage of test organisms in a short period of time (e.g., 96 hours). In this guideline, death is used as the measure of toxicity.

(3) *Carrier* means a solvent used to dissolve a test substance prior to delivery to the test chamber.

(4) *Conditioning* means the exposure of construction materials, test chambers, and testing apparatus to dilution water or to test solutions prior to the start of a test in order to minimize the sorption of the test substance onto the test facilities or the leaching of substances from the test facilities into the dilution water or test solution.

(5) *Death* means the lack of opercular movement by a test fish.

(6) *Flow-through* means a continuous or an intermittent passage of test solution or dilution water through a test chamber, or a holding or acclimation tank with no recycling.

(7) *Incipient* LC_{50} means that test substance concentration, calculated from

experimentally-derived mortality data, that is lethal to 50 percent of a test population when exposure to the test substance is continued until the mean increase in mortality does not exceed 10 percent in any concentration over a 24-hour period.

(8) LC_{50} means that test substance concentration, calculated from experimentally-derived mortality data, that is lethal to 50 percent of a test population during continuous exposure over a specified period of time.

(9) *Loading* means the ratio of fish biomass (grams, wet weight) to the volume (liters) of test solution in a test chamber or passing through it in a 24-hour period.

(10) *Static* means the test solution is not renewed during the period of the test.

(11) *Test solution* means the test substance and the dilution water in which the test substance is dissolved or suspended.

(c) *Test procedures*—(1) *Summary of the test.* (i) Test chambers are filled with appropriate volumes of dilution water. If a flow-through test is performed, the flow of dilution water through each chamber is adjusted to the rate desired.

(ii) The test substance is introduced into each test chamber. In a flow-through test, the amount of test substance which is added to the dilution water is adjusted to establish and maintain the desired concentration of test substance in each test chamber.

(iii) Test fish which have been acclimated in accordance with the test design are introduced into the test and control chambers by stratified random assignment.

(iv) Fish in the test and control chambers are observed periodically during the test; dead fish are removed at least twice each day and the findings are recorded.

(v) The dissolved oxygen concentration, pH, temperature and the concentration of test substance are measured at intervals in selected test chambers.

(vi) Concentration-response curves and LC_{50} values for the test substance are developed from the mortality data collected during the test.

(2) [Reserved]

(3) *Range finding test.* If the toxicity of the test substance is not already known, a range finding test should be performed to determine the range of concentrations to be used in the definitive test. The highest concentration of test substance for use in the range finding test should not exceed its solubility in water or the permissible amount of the carrier used.

(4) *Definitive test.* (i) A minimum of 20 fish should be exposed to each of five or more test substance concentrations. The range of concentrations to which the fish are exposed should be such that in 96 hours there are at least two partial mortality exposures bracketing 50 percent survival.

(ii) For exposure to each concentration of a test substance, an equal number of test fish shall be placed in two or more replicate test chambers. Test fish shall be impartially distributed among test chambers in such a manner that test results show no significant bias from the distributions.

(iii) Every test shall include a control consisting of the same dilution water, conditions, procedures, and fish from the same group used in the test, except that none of the test substance is added.

(iv) Mortality data collected during the test are used to calculate a 96-hour LC_{50}. The 24-, 48-, and 72-hour values should be calculated whenever there is sufficient mortality data to determine such values. If the 96-hour LC_{50} is less than 50 percent of the estimated 48-hour LC_{50} in a flow-through test, the test shall be continued until the mean increase in mortality at any test concentration does not exceed 10 percent over a 24-hour period or until 14 days.

(v) Test fish shall not be fed while they are being exposed to the test substance under static conditions or during the first 96 hours of flow-through testing. If the test continues past 96 hours, the fish should be fed a suitable food at a maintenance level every other day beginning on test day 5. Any excess food and the fecal material should be removed when observed.

(5) *Test results.* (i) Death is the primary criterion used in this test guideline to evaluate the toxicity of the test substance.

(ii) In addition to death, any abnormal behavior such as, but not limited to, erratic swimming, loss of reflex, increased excitability, lethargy, or any changes in appearance or physiology such as discoloration, excessive mucous production, hyperventilation, opaque eyes, curved spine, or hemorrhaging shall be recorded.

(iii) Observations on compound solubility shall be recorded. The investigator shall report the appearance of surface slicks, precipitates, or material adhering to the sides of the test chamber.

(iv) Each test and control chamber shall be checked for dead fish and observations recorded at 24, 48, 72, and 96 hours after the beginning of the test or within one hour of the designated times. If the test is continued past 96 hours, additional observations shall be made every 24 hours until termination.

(v) The mortality data is used to calculate LC_{50}'s and their 95 percent confidence limits, and to plot concentration-response curves for each time interval whenever sufficient data exists. The methods recommended for use in calculating LC_{50}'s include probit, logit, binomial, and moving average angle.

(vi) A test is unacceptable if more than 10 percent of the control fish die or exhibit abnormal behavior during a 96-hour test. If a flow-through test is continued past 96 hours, the maximum allowable additional mortality is 10 percent.

(6) *Analytical measurements*—(i) *Water quality analysis.* (A) The hardness, acidity, alkalinity, pH, conductivity, TOC or COD, and particulate matter of the dilution water should be measured at the beginning of each static test and at the beginning and end of each flow-through test. The month to month variation of the above values should be less than 10 percent and the pH should vary less than 0.4 units.

(B) During static tests, the dissolved oxygen concentration, temperature, and pH shall be measured in each test chamber at the beginning and end of the test. The test solution volume shall not be reduced by more than 10 percent as a result of these measurements.

(C) During flow-through tests, dissolved oxygen, temperature and pH measurements shall be made in each chamber at the beginning and end of the test.

(ii) *Collection of samples for measurement of test substance.* Test solution samples to be analyzed for the test substance should be taken midway between the top, bottom, and sides of the test chamber. These samples should not include any surface scum or material dislodged from the bottom or sides. Samples should be analyzed immediately or handled and stored in a manner which minimizes loss of test substance through microbial degradation, photodegradation, chemical reaction, volatilization, or sorption.

(iii) *Measurement of test substance.* (A) For static tests, the concentration of the test substance shall be measured at a minimum in each test chamber at each test concentration at the beginning (0-hour, before fish are added) and at the end of the test. During flow-through tests, the concentration of test substance shall be measured as follows:

(*1*) In at least the chamber of each test concentration at 0-hour.

(*2*) In at least the chamber of each test concentration at 96-hours and every 4 days thereafter, as long as the test is continued.

(*3*) In at least one appropriate chamber whenever a malfunction is detected in any part of the test substance delivery system.

(*4*) Equal aliquots of test solution may be removed from each replicate chamber and pooled for analysis.

(B) Filters and their holders used for determining the dissolved test substance concentrations should be prewashed with several volumes of distilled water and undergo a final rinse with test solution. Glass or stainless steel filter holders are best for organic test substances, while plastic holders are best for metals. The sample should be filtered within 30 minutes after it is taken from the test chamber.

(C) The analytical methods used to measure the amount of test substance in a sample shall be validated before beginning the test. The accuracy of a method should be verified by a method such as using known additions. This involves adding a known amount of the test substance to three water samples

taken from a chamber containing dilution water and the same number and species of fish as are used in the test. The nominal concentration of the test substance in those samples should span the concentration range to be used in the test.

(D) An analytical method is not acceptable if likely degradation products of the test substance give positive or negative interferences, unless it is shown that such degradation products are not present in the test chambers during the test.

(E) In addition to analyzing samples of test solution, at least one reagent blank, containing all reagents used, should also be analyzed.

(F) If the measured concentrations of dissolved test substance are considerably lower (e.g., <50 percent) than the nominal concentrations, the total test substance concentration should be measured in the highest test concentration.

(G) Among replicate test chambers, the measured concentrations shall not vary more than 20 percent. The measured concentration of the test substance in any chamber during the test should not vary more than 30 percent from the measured concentration at time 0.

(H) The mean measured concentration of test substance shall be used to calculate all LC_{60}'s and to plot all concentration-response curves.

(d) *Test conditions*—(1) *Test species*—(i) *Selection*. The test species for this test are the rainbow trout (*Salmo gairdneri*), bluegill (*Lepomis macrochirus*) and fathead minnow (*Pimephales promelas*). The particular species of fish to be used will be prescribed in the test rule.

(ii) *Age and condition of fish*. (A) Juvenile fish shall be used. Fish used in a particular test shall be the same age and be of normal size and appearance for their age. The longest fish shall not be more than twice the length of the shortest.

(B) All newly acquired fish should be quarantined and observed for at least 14 days prior to use in a test.

(C) Fish shall not be used for a test if they appear stressed or if more than five percent die during the 48 hours immediately prior to the test.

(iii) *Acclimation of test fish*. (A) If the holding water is not from the same source as the test dilution water, acclimation to the dilution water should be done gradually over a 48-hour period. The fish should then be held an additional 14 days in the dilution water prior to testing. Any changes in water temperature should not exceed 3 °C per day. Fish should be held for a minimum of 7 days at the test temperature prior to testing.

(B) During the final 48-hours of acclimation, fish should be maintained in facilities with background colors and light intensities similar to those of the testing area and should not be fed.

(2) *Facilities*—(i) *General*. Facilities needed to perform this test include:

(A) Flow-through tanks for holding and acclimating fish.

(B) A mechanism for controlling and maintaining the water temperature during the holding, acclimation and test periods.

(C) Apparatus for straining particulate matter, removing gas bubbles, or insufficient dissolved oxygen, respectively.

(D) Apparatus for providing a 16-hour light and 8-hour dark photoperiod with a 15- to 30-minute transition period.

(E) Chambers for exposing test fish to the test substance.

(F) A test substance delivery system for flow-through tests.

(ii) *Construction materials*. Construction materials and commercially purchased equipment that may contact the stock solution, test solution, or dilution water should not contain substances that can be leached or dissolved into aqueous solutions in quantities that can alter the test results. Materials and equipment that contact stock or test solutions should be chosen to minimize sorption of test chemicals. Glass, stainless steel, and perfluorocarbon plastic should be used whenever possible. Concrete, fiberglass, or plastic (e.g., PVC) may be used for holding tanks, acclimation tanks, and water supply systems, but they should be used to remove rust particles. Rubber, copper, brass, galvanized metal, epoxy glues, and lead should not come in contact with the dilution water, stock solution, or test solution.

(iii) *Test substance delivery system.* In flow-through tests, diluters, metering pump systems, or other suitable devices should be used to deliver the test substance to the test chambers. The system used should be calibrated before each test. Calibration includes determining the flow rate through each chamber and the concentration of the test substance delivered to each chamber. The general operation of the test substance delivery system should be checked twice daily during a test. The 24-hour flow rate through a test chamber should be a minimum of 6 tank volumes. During a test, the flow rates should not vary more than 10 percent from one test chamber to another.

(iv) *Test chambers.* Test chambers made of stainless steel should be welded, not soldered. Test chambers made of glass should be fused or bonded using clear silicone adhesive. As little adhesive as possible should be left exposed in the interior of the chamber.

(v) *Cleaning of test system.* Test substance delivery systems and test chambers should be cleaned before each test. They should be washed with detergent and then rinsed in sequence with clean water, pesticide-free acetone, clean water, and 5 percent nitric acid, followed by two or more changes of dilution water.

(vi) *Dilution water.* (A) Clean surface or ground water reconstituted water, or dechlorinated tap water is acceptable as dilution water if the test fish will survive in it for the duration of the holding, acclimating, and testing periods without showing signs of stress, such as discoloration, hemorrhaging, disorientation or other unusual behavior. The quality of the dilution water should be constant and should meet the following specifications measured at least twice a year:

Substance	Maximum
Particulate matter	20 mg/liter.
Total organic carbon or	2 mg/liter.
chemical oxygen demand	5 mg/liter.
Un-ionized ammonia	1 µg/liter.
Residual chlorine	1 µg/liter.
Total organochloring pesticides	50 µg/liter.
Total organocholorine pesticides plus polychlorinated biphenyls (PCBs).	50 µg/liter.
or organic chlorine	25 µg/liter.

(B) The concentration of dissolved oxygen in the dilution water should be between 90 and 100 percent saturation; 9.8 to 10.9 mg/l for tests with trout, and 8.0 to 8.9 mg/l for tests with bluegill or fathead minnow at sea level. If necessary, the dilution water can be aerated before the addition of the test substance. All reconstituted water should be aerated before use. Buffered soft water should be aerated before but not after the addition of buffers.

(C) If disease organisms are present in the dilution water in sufficient numbers to cause infection, they should be killed or removed by suitable equipment.

(D) Glass distilled or carbon filtered deionized water with a conductivity less than 1 micromho/cm is acceptable for use in making reconstituted water. If the reconstituted water is prepared from a ground or surface water source, conductivity, and total organic carbon (TOC) or chemical oxygen demand (COD) should be measured on each batch.

(vii) *Carriers.* (A) Distilled water should be used in making stock solutions of the test substance. If the stock volume however is more than 10 percent of the test solution volume, dilution water should be used. If a carrier is absolutely necessary to dissolve the test substance, the volume used should not exceed the minimum volume necessary to dissolve or suspend the test substance in the test solution. If the test substance is a mixture, formulation, or commercial product, none of the ingredients is considered a carrier unless an extra amount is used to prepare the stock solution.

(B) Triethylene glycol and dimethyl formamide are the prefered carriers, but acetone may also be used. The concentration of triethylene glycol in the test solution should not exceed 80 mg/1. The concentration of dimethyl formamide or acetone in the test solution should not exceed 5.0 mg/1.

(3) *Test parameters*—(i) *Loading.* The number of fish placed in a test chamber should not be so great as to affect the results of the test. The loading should not be so great that the test substance concentrations are decreased by more than 20 percent due to uptake by the fish. In static tests, loading should not exceed 0.5 grams of fish per liter of solution in the test chamber at any one

time. In flow-through tests loading should not exceed 0.5 grams of fish per liter of test solution passing through the chamber in 24 hours. These loading rates should be sufficient to maintain the dissolved oxygen concentration above the recommended levels and the ammonia concentration below 20 µg/l.

(ii) *Dissolved oxygen concentration.* (A) During static tests with rainbow trout the dissolved oxygen in each test chamber shall be greater than 5.5 mg/1. In tests with bluegill and fathead minnows, the DO shall be maintained above 4.5 mg/1.

(B) During flow-through tests the dissolved oxygen concentration shall be maintained above 8.2 mg/1 in tests with trout and above 6.6 mg/l in tests with bluegills or fathead minnows.

(iii) *Temperature.* The test temperature shall be 22 °C for bluegill and fathead minnow and 12 °C for rainbow trout. Excursions from the test temperature shall be no greater than ±2 °C. The temperature shall be measured at least hourly in one test chamber.

(iv) *Light.* A 16-hour light and 8-hour dark photoperiod should be maintained.

(e) *Reporting.* The sponsor shall submit to the EPA all data developed by the test that are suggestive or predictive of toxicity. In addition to the reporting requirements prescribed in part 792—*Good Laboratory Practice Standards* of this chapter, the reported test data shall include the following:

(1) The source of the dilution water, a description of any pretreatment, and the measured hardness, acidity, alkalinity, pH, conductivity, TOC or COD and particulate matter.

(2) A description of the test chambers, the depth and volume of solution in the chamber, the specific way the test was begun (e.g., conditioning, test substance additions), and for flow-through tests, a description of the test substance delivery system.

(3) Detailed information about the test fish, including the scientific name and method of verification, average weight (grams, wet weight), standard length, age, source, history, observed diseases, treatments, and mortalities, acclimation procedures, and food used.

(4) The number of replicates used, the number of organisms per replicate, the loading rate, and the flow rate for flow-through tests.

(5) The measured DO, pH and temperature and the lighting regime.

(6) The solvent used, the test substance concentration in the stock solution, the highest solvent concentration in the test solution and a description of the solubility determinations in water and solvents if used.

(7) The concentrations of the test substance at each test concentration just before the start of the test and at all subsequent sampling periods.

(8) The number of dead and live tests organisms, the percentage of organisms that died, and the number that showed any abnormal effects in the control and in each test chamber at each observation period.

(9) The 96-hour LC_{50}, and when sufficient data have been generated, the 24–, 48–, 72–, and incipient LC_{50} values, their 95 percent confidence limits, and the methods used to calculate the LC_{50} values and their confidence limits.

(10) When observed, the observed no effect concentration (the highest concentration tested at which there were no mortalities or abnormal behavioral or physiological effects).

(11) The concentration-response curve at each observation period for which a LC_{50} was calculated.

(12) Methods and data records of all chemical analyses of water quality parameters and test substance concentrations, including method validations and reagent blanks.

[50 FR 39321, Sept. 27, 1985, as amended at 52 FR 19062, May 20, 1987; 54 FR 29715, July 14, 1989; 54 FR 33148, Aug. 11, 1989]

§ 797.1600 Fish early life stage toxicity test.

(a) *Purpose.* This guideline is intended to be used for assessing the propensity of chemical substances to produce adverse effects to fish during the early stages of their growth and development. This guideline describes the conditions and procedures for the continuous exposure of several representative species to a chemical substance during egg, fry and early juvenile life stages. The Environmental Protection Agency (EPA) will use data from this test in assessing the potential hazard

of the test substance to the aquatic environment.

(b) *Definitions.* The definitions in section 3 of the Toxic Substances Control Act (TSCA) and the definitions in part 792—*Good Laboratory Practice Standards*, apply to this section. In addition, the following definitions are applicable to this specific test guideline:

(1) ''Acclimation'' physiological or behavioral adaptation of organisms to one or more environmental conditions associated with the test method (e.g., temperature, hardness, pH).

(2) ''Carrier'' solvent or other agent used to dissolve or improve the solubility of the test substance in dilution water.

(3) ''Conditioning'' exposure of construction materials, test chambers, and testing apparatus to dilution water or to the test solution prior to the start of the test in order to minimize the sorption of test substance onto the test facilities or the leachig of substances from test facilities into the dilution water or the test solution.

(4) ''Control'' an exposure of test organisms to dilution water only or dilution water containing the test solvent or carrier (no toxic agent is intentionally or inadvertently added).

(5) ''Dilution water'' the water used to produce the flow-through conditions of the test to which the test substance is added and to which the test species is exposed.

(6) ''Early life stage toxicity test'' a test to determine the minimum concentration of a substance which produces a statistically significant observable effect on hatching, survival, development and/or growth of a fish species continuously exposed during the period of their early development.

(7) ''Embryo cup'' a small glass jar or similar container with a screened bottom in which the embryos of some species (i.e., minnow) are placed during the incubation period and which is normally oscillated to ensure a flow of water through the cup.

(8) ''Flow through'' refers to the continuous or very frequent passage of fresh test solution through a test chamber with no recycling.

(9) ''Hardness'' the total concentration of the calcium and magnesium ions in water expressed as calcium carbonate (mg $CaCO_3$/liter).

(10) ''Loading'' the ratio of biomass (grams of fish, wet weight) to the volume (liters) of test solution passing through the test chamber during a specific interval (normally a 24-hr. period).

(11) ''No observed effect concentration (NOEC)'' the highest tested concentration in an acceptable early life stage test: (i) which did not cause the occurrence of any specified adverse effect (statistically different from the control at the 95 percent level); and (ii) below which no tested concentration caused such an occurrence.

(12) ''Observed effect concentration (OEC)'' the lowest tested concentration in an acceptable early life stage test: (i) Which caused the occurrence of any specified adverse effect (statistically different from the control at the 95 percent level); and (ii) above which all tested concentrations caused such an occurrence.

(13) ''Replicate'' two or more duplicate tests, samples, organisms, concentrations, or exposure chambers.

(14) ''Stock solution'' the source of the test solution prepared by dissolving the test substance in dilution water or a carrier which is then added to dilution water at a specified, selected concentration by means of the test substance delivery system.

(15) ''Test chamber'' the individual containers in which test organisms are maintained during exposure to test solution.

(16) ''Test solution'' dilution water with a test substance dissolved or suspended in it.

(17) ''Test substance'' the specific form of a chemical substance or mixture that is used to develop data.

(c) *Test Procedures*—(1) *Summary of test.* (i) The early life stage toxicity test with fish involves exposure of newly fertilized embryos to various concentrations of a test substance. Exposure continues for 28 days post hatch for the minnows and 60 days post hatch for the trout species. During this time various observations and measurements are made in a specific manner and schedule in order to determine the lowest effect and highest no-effect concentrations of the test substance.

(ii) A minimum of five exposure (treatment) concentrations of a test substance and one control are required to conduct an early life stage toxicity test. The concentration of the test substance in each treatment is usually 50 percent of that in the next higher treatment level.

(iii) For each exposure concentration of the test substance and for each control (i.e., regular control and carrier control is required) there shall be:

(A) At least two replicate test chambers, each containing one or more embryo incubation trays or cups; and there shall be no water connections between the replicate test chambers;

(B) At least 60 embryos divided equally in such a manner that test results show no significant bias from the distributions, between the embryo incubation trays or cups for each test concentration and control (i.e., 30 per embryo cup with 2 replicates);

(C) All surviving larvae divided equally between the test chambers for each test concentration and control (e.g., 30 larvae per test chamber with 2 replicates).

(iv) *Duration.* (A) For fathead minnow and sheepshead minnow a test begins when the newly fertilized minnow embryos (less than 48-hours old) are placed in the embryo cups and are exposed to the test solution concentrations. The test terminates following 28 days of post-hatch exposure, i.e., 28 days after the newly hatched fry are transferred from the embryo cups into the test chambers.

(B) For brook trout and rainbow trout a test begins when newly fertilized trout embryos (less than 96-hours old) are placed in the embryo trays or cups and are exposed to the test solution concentrations. The test terminates following 60 days of post-hatch exposure (for an approximate total exposure period of 90 days).

(C) For silverside a test begins with newly fertilized embryos (less than or equal to 48 hours old) and is terminated 28 days after hatching. The chorionic fibrils should be cut before randomly placing the embryos in the egg incubation cups.

(2) [Reserved]

(3) *Range-finding test.* (i) A range finding test is normally performed with the test substance to determine the test concentrations to be used in the early life stage toxicity test, especially when the toxicity is unknown. It is recommended that the test substance concentrations be selected based on information gained from a 4- to 10-day flow-through toxicity test with juveniles of the selected test species.

(ii) The highest concentration selected for the early life stage toxicity test should approximate the lowest concentration indicated in any previous testing to cause a significant reduction in survival. The range of concentrations selected is expected to include both observed effect and no-observed effect levels. The dilution factor between concentrations is normally 0.50, however, other dilution factors may be used as necessary.

(4) *Definitive test*—(i) *General.* (A) A test shall not be initiated until after the test conditions have been met and the test substance delivery system has been observed functioning properly for 48-hours. This includes temperature stability, flow requirements of dilution water, lighting requirements, and the function of strainers and air traps included in the water-supply system, and other conditions as specified previously.

(B) New holding and test facilities should be tested with sensitive organisms (i.e., juvenile test species or daphnids) before use to assure that the facilities or substances possibly leaching from the equipment will not adversely affect the test organisms during an actual test.

(C) Embryos should be acclimated for as long as practical to the test temperature and dilution water prior to the initiation of the test.

(D) When embryos are received from an outside culture source (i.e., rainbow and brook trout) at a temperature at variance with the recommended test temperature they shall be acclimated to the test temperature. When eggs are received, they should be immediately unpacked and the temperature of the surrounding water determined. Sudden temperature changes should be avoided. Acclimation to the appropriate test temperature should be accomplished within a period of 6 hours, and should incorporate the use of dilution water.

(E) Embryos should be visually inspected prior to placement in the embryo cups or screen trays. All dead embryos shall be discarded. Dead embryos can be discerned by a change in coloration from that of living embryos (e.g., trout embryos turn white when dead). During visual inspection, empty shells, opaque embryos, and embryos with fungus or partial shells attached shall be removed and discarded. If less than 50 percent of the eggs to be used appear to be healthy, all embryos in such a lot shall be discarded.

(ii) *Embryo incubation procedures.* (A) Embryos can be distributed to the embryo cups or screen trays using a pipette with a large bore or a similar apparatus. Newly-hatched silverside fry are very sensitive to handling; the egg incubation cups should not be handled at all the first 5 days after hatching begins. Just before hatching is expected to begin, the embryos should be transferred to clean incubation cups. Trout embryos can be distributed by using a small container which has been precalibrated to determine the approximate number of embryos it can hold; embryos are measured volumetrically in this manner, and are then poured onto the screen tray (or embryo cup). Trout embryos should be separated on the screen tray so that they are not in contact with each other. A final count will ensure the actual number on the screen tray. After random assignment, the screen trays or embryo cups are placed in the test chambers.

(B) Each day until hatch the embryos are visually examined. Minnow embryos may be examined with the aid of a magnifying viewer. Trout embryos should not be touched. Trout embryos should be maintained in low intensity light or in darkness until 1-week post hatch, and are usually examined with the aid of a flashlight or under low intensity light. Dead embryos should be removed and discarded. Any embryos which are heavily infected with fungus shall be discarded and shall be subtracted from the initial number of embryos used as a basis for the calculations of percentage hatch.

(C) When embryos begin to hatch they should not be handled.

(iii) *Initiation of fry exposure.* (A) Forty-eight hours after the first hatch in each treatment level, or when hatching is completed, the live young fish shall be counted and transferred from each embryo cup into the appropriate test chamber. For silverside, all surviving fry are not counted until six days after hatching and are not transferred to embryo cups. All of the normal and abnormal fry shall be gently released into the test chamber by allowing the fry to swim out of each embryo cup; nets shall not be used. The trout embryos incubated on screen trays will hatch out in the test chambers, therefore handling of fish is not necessary.

(B) If necessary, fry can be transferred from one replicate embryo cup to the other replicate within a test concentration to achieve equal numbers in each replicate chamber.

(C) The number of live fry, live normal fry, live embryos, dead embryos and unaccounted for embryos for each cup shall be recorded when hatching is deemed complete. Those fry which are visibly (without the use of a dissecting scope or magnifying viewer) lethargic or grossly abnormal (either in swimming behavior or physical appearance) shall be counted. Late hatching embryos shall be left in the embryo cups to determine if they will eventually hatch or not. The range of time-to-hatch (to the nearest day) for each cup shall be recorded.

(iv) *Time to first feeding.* (A) The first feeding for the fathead and sheepshead minnow fry shall begin shortly after transfer of the fry from the embryo cups to the test chambers. Silversides are fed the first day after hatch. Trout species initiate feeding at swim-up. The trout fry shall be fed trout starter mash three times a day *ad libitum,* with excess food siphoned off daily. The minnow fry shall be fed live newly-hatched brine shrimp nauplii (*Artemia salina*) at least three times a day.

(B) For the first seven days, feeding shall be done at minimum intervals of four hours (i.e., 8 am, 12 noon, and 4 pm); thereafter the fry shall be fed as indicated below.

(v) *Feeding.* (A) The fathead and sheepshead minnow fry shall be fed newly hatched brine shrimp nauplii for the duration of the test at approximately 4-hour intervals three times a

day during the week and twice on the weekend after the first week. Trout fry shall be fed at similar intervals and may receive live brine shrimp nauplii in addition to the trout starter food after the first week. Between days 1 and 8 after first hatching, silverside fry are fed the rotifer, *Brachionus plicatilis*, three times daily at a concentration of 5,000 to 10,000 organisms per egg cup (based on 15 fish/cup). From days 9 to 11, the fry shall be fed approximately 2,500 newly hatched brine shrimp (*Artemia*) nauplii and 5,000 to 10,000 rotifers twice daily. For the remainder of the test, the fish will be fed brine shrimp exclusively. The number of organisms used should be gradually increased to approximately 5,000 nauplii by test day 28.

(B) An identical amount of food should be provided to each chamber. Fish should be fed *ad libitum* for 30 minutes with excess food siphoned off the bottom once daily if necessary.

(C) Fish should not be fed for the last 24 hours prior to termination of the test.

(vi) *Carriers.* Water should be used in making up the test stock solutions. If carriers other than water are absolutely necessary, the amount used should be the minimum necessary to achieve solution of the test substance. Triethylene glycol and dimethyl formamide are preferred, but ethanol and acetone can be used if necessary. Carrier concentrations selected should be kept constant at all treatment levels.

(vii) *Controls.* Every test requires a control that consists of the same dilution water, conditions, procedures, and test organisms from the same group used in the other test chambers, except that none of the test substance is added. If a carrier (solvent) is used, a separate carrier control is required in addition to the regular control. The carrier control shall be identical to the regular control except that the highest amount of carrier present in any treatment is added to this control. If the test substance is a mixture, formulation, or commercial product, none of the ingredients is considered a carrier unless an extra amount is used to prepare the stock solution.

(viii) *Randomization.* The location of all test chambers within the test system shall be randomized. A representative sample of the test embryos should be impartially distributed by adding to each cup or screen tray no more than 20 percent of the number of embryos to be placed in each cup or screen tray and repeating the process until each cup or screen tray contains the specified number of embryos. Alternatively, the embryos can be assigned by random assignment of a small group (e.g., 1 to 5) of embryos to each embryo cup or screen tray, followed by random assignment of a second group of equal number to each cup or tray, which is continued until the appropriate number of embryos are contained in each embryo cup or screen tray. The method of randomization used shall be reported.

(ix) *Observations.* During the embryo exposure period observations shall be made to check for mortality. During the exposure period of the fry, observations shall be made to check for mortality and to note the physical appearance and behavior of the young fish. The biological responses are used in combination with physical and chemical data in evaluating the overall lethal and sublethal effects of the test substance. Additional information on the specific methodology for the data obtained during the test procedure are discussed in the following sections.

(x) *Biological data.* (A) Death of embryos shall be recorded daily.

(B) When hatching commences, daily records of the number of embryos remaining in each embryo cup are required. This information is necessary to quantify the hatching success. A record of all deformed larvae shall be kept throughout the entire post-hatch exposure. Time to swim-up shall be recorded for the trout. Upon transfer of fry from the embryo cups to the test chambers, daily counts of the number of live fish should be made. At a minimum, live fish shall be counted on days 4, 11, 18, 25 and (weekly thereafter for the trout species) finally on termination of the test.

(C) The criteria for death of young fish is usually immobility, especially absence of respiratory movement, and lack of reaction to gentle prodding. Deaths should be recorded daily and dead fish removed when discovered.

(D) Daily and at termination of the test, the number of fish that appear (without the use of a magnifying viewer) to be abnormal in behavior (e.g., swimming erratic or uncoordinated, obviously lethargic, hyperventilating, or over excited, etc.) or in physical appearance (e.g., hemorrhaging, producing excessive mucous, or are discolored, deformed, etc.) shall be recorded and reported in detail.

(E) All physical abnormalities (e.g., stunted bodies, scoliosis, etc.) shall be photographed and the deformed fish which die, or are sacrificed at the termination of the test, shall be preserved for possible future pathological examination.

(F) At termination, all surviving fish shall be measured for growth. Standard length measurements should be made directly with a caliper, but may be measured photographically. Measurements shall be made to the nearest millimeter (0.1 mm is desirable). Weight measurements shall also be made for each fish alive at termination (wet, blotted dry, and to the nearest 0.01 g for the minnows and 0.1 g for the trout). If the fish exposed to the toxicant appear to be edematous compared to control fish, determination of dry, rather than wet, weight is recommended.

(G) Special physiological, biochemical and histological investigations on embryos, fry, and juveniles may be deemed appropriate and shall be performed on a case by case basis.

(5) *Test results.* (i) Data from toxicity tests are usually either continuous (e.g. length or weight measurements) or dichotomous (e.g. number hatching or surviving) in nature. Several methods are available and acceptable for statistical analysis of data derived from early life stage toxicity tests; however, the actual statistical methodology to analyze and interpret the test results shall be reported in detail.

(ii) The significance level for all statistical testing shall be a minimum of P=0.05 (95 percent confidence level).

(A) *Example of statistical analysis.* (*1*) Mortality data for the embryonic stage, fry stage and for both stages in replicate exposure chambers should first be analyzed using a two-way analysis of variance (ANOVA) with interaction model. This analysis will determine if replicates are significantly different from each other. If a significant difference between replicates or a significant interaction exists, cause for the difference should be determined. Modification should then be made in the test apparatus or in handling procedures for future toxicity tests. Further calculations should incorporate the separation of replicates. If no significant difference is observed, replicates may be pooled in further analyses.

(*2*) After consideration of replicate responses, mortality data should then be subjected to one-way ANOVA. The purpose of this analysis is to determine if a significant difference exists in the percentage mortality between control fish and those exposed to the test material.

(*3*) If the one-way ANOVA results in a F ratio that is significant, it would be acceptable to perform t-tests on the control versus each concentration. A second technique is to identify treatment means that are significantly different; this method should involve the additional assumption that the true mean response decreases generally with increasing concentration. The researcher may also be interested in determining significant differences between concentrations.

(*4*) Growth data should also be analyzed by one-way ANOVA with the inclusion of a covariate to account for possible differences in growth of surviving fry in embryo cup(s) that contain fewer individuals. This condition can occur in cases when the same amount of food is given to each test chamber regardless of the number of survivors.

(B) *Test data to be analyzed.* Data to be statistically analyzed are:

(*1*) Percentage of healthy, fertile embryos at 40–48 hours after initiation of the test. Percentage is based upon initial number used.

(*2*) Percentage of embryos that produce live fry for release into test chambers. Percentage is based on number of embryos remaining after thinning.

(*3*) Percentage of embryos that produce live, normal fry for release into test chambers. Percentage is based

upon number of embryos remaining after thinning.

(*4*) Percentage of fry survival at swim-up for trout. Percentage is based upon number of embryos remaining after thinning.

(*5*) Percentage of embryos that produce live fish at end of test. Percentage is based upon number of embryos remaining after thinning.

(*6*) Percentage of embryos that produce live, normal fish at end of test. Percentage is based upon number of embryos remaining after thinning.

(*7*) Weights and lengths of individual fish alive at the end of the test.

(C) It is important that fish length and weight measurements be associated with individual test chambers since the density of the fish and available food should be considered in the growth of the organism.

(iii) *Acceptability criteria.* (A) An early life stage toxicity test is not acceptable unless at least one of the following criteria is significantly different (p=0.05) from control organisms when compared with treated organisms, and the responses are concentration-dependent: mortality of embryos, hatching success, mortality of fry (at swim-up for trout), total mortality throughout the test, and growth (i.e. weight). If no significant effects occur, but the concentrations tested were the highest possible due to solubility or other physio-chemical limitations, the data will be considered for acceptance.

(B) In addition to obtaining significant effects on the exposed test species, a measure of acceptability in the response of control fish is also required.

(C) A test is not acceptable if the average survival of the control fish at the end of the test is less than 80 percent or if survival in any one control chamber is less than 70 percent. For silversides, a test is not acceptable if the average overall survival of the control embryos and fish at the end of the test is less than 60 percent.

(D) If a carrier is used, the criteria for effect (mortality of embryos and fry, growth, etc.) used in the comparison of control and exposed test organisms shall also be applied to the control and control with carrier chambers. For the test to be considered acceptable, no significant difference shall exist between these criteria.

(E) A test is not acceptable if the relative standard deviation (RSD=100 times the standard deviation divided by the mean) of the weights of the fish that were alive at the end of the test in any control test chamber is greater than 40 percent.

(6) *Analytical measurements*—(i) *Analysis of water quality.* Measurement of certain dilution water quality parameters shall be performed every 6 months, to determine the consistency of the dilution water quality. In addition, if data in 30-day increments are not available to show that freshwater dilution water is constant, measurements of hardness, alkalinity, pH, acidity, conductivity, TOC or COD and particulate matter should be conducted once a week in the highest test substance concentration. Measurement of calcium, magnesium, sodium, potassium, chloride, and sulfate is desirable.

(ii) *Dissolved oxygen measurement.* The dissolved oxygen concentration shall be measured in each test chamber at the beginning of the test and at least once weekly thereafter (as long as live organisms are present) in two replicates of the control and the high, medium, and low test substance concentrations.

(iii) *Temperature measurement.* Temperatures shall be recorded in all test chambers at the beginning of the test, once weekly thereafter and at least hourly in one test chamber. When possible, the hourly measurement shall be alternated between test chambers and between replicates.

(iv) *Test substance measurement.* (A) Prior to the addition of the test substance to the dilution water, it is recommended that the test substance stock solution be analyzed to verify the concentration. After addition of the test substance, the concentration of test substance should be measured at the beginning of the test in each test concentration and control(s), and at least once a week thereafter. Equal aliquots of test solution may be removed from each replicate chamber and pooled for analysis. If a malfunction in the delivery system is discovered, water samples shall be taken

from the affected test chambers immediately and analyzed.

(B) The measured concentration of test substance in any chamber should be no more than 30 percent higher or lower than the concentration calculated from the composition of the stock solution and the calibration of the test substance delivery system. If the difference is more than 30 percent, the concentration of test substance in the solution flowing into the exposure chamber (influent) should be analyzed. These results will indicate whether the problem is in the stock solution, the test substance delivery system or in the test chamber. Measurement of degradation products of the test substance is recommended if a reduction of the test substance concentration occurs in the test chamber.

(v) *Sampling and analysis methodology.* (A) Generally, total test substance measurements are sufficient; however, the chemical characteristics of the test substance may require both dissolved and suspended test substance measurements.

(B) For measurement of the test substance, water samples shall be taken midway between the top, bottom, and sides of the test chamber and should not include any surface scum or material stirred up from the bottom or sides. Samples of test solutions shall be handled and stored appropriately to minimize loss of test substance by microbial degradation, photodegradation, chemical reaction, volatilization, or sorption.

(C) Chemical and physical analyses shall be performed using standardized methods whenever possible. The analytical method used to measure the concentration of the test substance in the test solution shall be validated before the beginning of the test. At a minimum, a measure of the accuracy of the method should be obtained on each of two separate days by using the method of known additions, and using dilution water from a tank containing test organisms. Three samples should be analyzed at the next-to-lowest test substance concentration. It is also desirable to study the accuracy and precision of the analytical method for test guideline determination by use of reference (split) samples, or interlaboratory studies, and by comparison with alternative, reference, or corroborative methods of analysis.

(D) An analytical method is not acceptable if likely degradation products of the test substance, such as hydrolysis and oxidation products, give positive or negative interferences, unless it is shown that such degradation products are not present in the test chambers during the test. In general, atomic absorption spectrophotometric methods for metals and gas chromatographic methods for organic compounds are preferable to colorimetric methods.

(E) In addition to analyzing samples of test solution, at least one reagent blank also should be analyzed when a reagent is used in the analysis. Also, at least one sample for the method of known additions should be prepared by adding test substance at the concentration used in the toxicity test.

(d) *Test conditions*—(1) *Test species.* (i) One or more of the recommended test species will be specified in rules under part 799 of this chapter requiring testing of specific chemicals. The recommended test species are:

(A) Fathead minnow (*Pimephales promelas* Rafinesque).

(B) Sheepshead minnow (*Cyprinodon variegatus*).

(C) Brook trout (*Salvelinus fontinalis*).

(D) Rainbow trout (*Salmo gairdneri*).

(E) Atlantic silverside (*Menidia menidia*).

(F) Tidewater silverside (*Menidia peninsulae*).

(ii) Embryos used to initiate the early life stage test shall be less than 48 hours old for the fathead and sheepshead minnows, silversides, and less than 96 hours old for the brook trout and rainbow trout. In addition, the following requirements shall be met:

(A) All embryos used in the test shall be from the same source. Embryos shall be obtained from a stock cultured in-house when possible, and maintained under the same parameters as specified for the test conditions. When it is necessary to obtain embryos from an external source, caution should be exercised to ensure embryo viability and to minimize the possibility of fungal growth. A description of the brood

stock history or embryo source shall be made available to EPA upon request.

(B) Test species shall be cared for and handled properly in order to avoid unnecessary stress. To maintain test species in good condition and to maximize growth, crowding shall be prevented, and the dissolved oxygen level shall be maintained near saturation.

(C) Embryos and fish shall be handled as little as possible. Embryos shall be counted and periodically inspected until hatching begins. When larvae begin to hatch, they shall not be handled. Transfer of minnow larvae from embryo cups to test chambers shall not involve the use of nets. No handling is necessary following introduction into the test chambers until termination of the test.

(D) If fathead minnow embryos are obtained from in-house culture units, the embryos should be gently removed from the spawning substrate. The method for separating the fertilized eggs from the substrate is important and can affect the viability of the embryos; therefore the finger-rolling procedure is recommended.

(E) Disease treatment. Chemical treatments to cure or prevent diseases should not be used before, and should not be used during a test. All prior treatments of brood stock should be reported in detail. Severely diseased organisms should be destroyed.

(2) *Test facilities*—(i) *Construction materials.* Construction materials and equipment that contact stock solutions, test solutions, or dilution water into which test embryos or fish are placed should not contain any substances that can be leached or dissolved into aqueous solutions in quantities that can affect test results. Materials and equipment that contact stock or test solutions should be chosen to minimize sorption of test chemicals from dilution water. Glass, #316 stainless steel, nylon screen and perfluorocarbon plastic (e.g., Teflon#) are acceptable materials. Concrete or rigid (unplasticized) plastic may be used for holding and acclimation tanks, and for water supply systems, but they should be thoroughly conditioned before use. If cast iron pipe is used in freshwater supply systems, colloidal iron may leach into the dilution water and strainers should be used to remove rust particles. Natural rubber, copper, brass, galvanized metal, epoxy glues, and flexible tubing should not come in contact with dilution water, stock solutions, or test solutions.

(ii) *Test chambers* (exposure chambers). (A) Stainless steel test chambers should be welded or glued with silicone adhesive, and not soldered. Glass should be fused or bonded using clear silicone adhesive. Epoxy glues are not recommended, but if used ample curing time should be allowed prior to use. As little adhesive as possible should be in contact with the water.

(B) Many different sizes of test chambers have been used successfully. The size, shape and depth of the test chamber is acceptable if the specified flow rate and loading requirements can be achieved.

(C) The actual arrangement of the test chambers can be important to the statistical analysis of the test data. Test chambers can be arranged totally on one level (tier) side by side, or on two levels with each level having one of the replicate test substance concentrations or controls. Regardless of the arrangement, it shall be reported in detail and considered in the data analysis.

(iii) *Embryo incubation apparatus.* (A) Recommended embryo incubation apparatus include embryo cups for the minnow species and screen trays for the trout species, although embryo cups can be used for the trout species. Embryo cups are normally constructed from approximately 4–5 cm inside diameter, 7–8 cm high, glass jars with the end cut off or similar sized sections of polyethylene tubing. One end of the jar or tubing is covered with stainless steel or nylon screen (approximately 40 meshes per inch is recommended). Embryo cups for silversides are normally constructed by using silicone adhesive to glue a 10-cm high, 363-um nylon mesh tube inside a 9-cm I.D. glass Petri dish bottom. The embryo cups shall be appropriately labeled and then suspended in the test chamber in such a manner as to ensure that the test solution regularly flows through the cup and that the embryos are always submerged but are not agitated too vigorously. Cups may be oscillated by a

rocker arm apparatus with a low rpm motor (e.g., 2 rpm) to maintain the required flow of test water. The vertical-travel distance of the rocker arm apparatus during oscillation is normally 2.5–4.0 cm. The water level in the test chambers may also be varied by means of a self-starting siphon in order to ensure exchange of water in the embryo cups.

(B) The trout embryo incubation trays can be made from stainless steel screen (or other acceptable material such as plastic) of about 3–4 mm mesh. The screen tray should be supported above the bottom of the test chamber by two folds of screen or other devices which function as legs or supports. The edges of the screen tray should be turned up to prevent bump spills and to prevent the embryos from rolling off in the event of excessive turbulence. Suspending or supporting the screen tray off the bottom ensures adequate water circulation around the embryos and avoids contact of embryos with possible bottom debris.

(iv) *Test substance delivery system.* (A) The choice of a specific delivery system depends upon the specific properties and requirements of the test substance. The apparatus used should accurately and precisely deliver the appropriate amount of stock solution and dilution water to the test chambers. The system selected shall be calibrated before each test. Calibration includes determining the flow rate through each chamber, and the proportion of stock solution to dilution water delivered to each chamber. The general operation of the test substance delivery system shall be checked at least twice daily for normal operation throughout the test. A minimum of five test substance concentrations and one control shall be used for each test.

(B) The proportional diluter and modified proportional diluter systems and metering pump systems have proven suitable and have received extensive use.

(C) Mixing chambers shall be used between the diluter and the test chamber(s). This may be a small container or flow-splitting chamber to promote mixing of test substance stock solution and dilution water, and is positioned between the diluter and the test chambers for each concentration. If a proportional diluter is used, separate delivery tubes shall run from the flow-splitting chamber to each replicate test chamber. Daily checks on this latter system shall be made.

(D) Silverside fry are injured easily and are susceptible to impingement on the mesh of the incubation cups. Consequently, water flow into and out of the cups when counting fry must be at a slow rate. This can be accomplished by using small diameter (e.g., 2 mm I.D.) capillary tubes to drain the test solution from spitter boxes into the replicate test chambers. The use of a self-starting siphon to gradually lower (i.e., less than or equal to 1 min.) the water level approximately 2 cm in the test chamber is recommended. A minimum water depth of 5 cm should be maintained in the cups. Although it may be satisfactory, a rocker-arm type apparatus has not yet been used with silversides.

(v) *Other equipment required.* (A) An apparatus for removing undesirable organisms, particulate matter and air bubbles.

(B) An apparatus for aerating water.

(C) A suitable magnifying viewer for examination of minnow embryos.

(D) A suitable apparatus for the precise measurement of growth of the fish, including both length (e.g., with metric or ruler caliper or photographic equipment) and weight.

(E) Facilities for providing a continuous supply of live brine shrimp nauplii (*Artemia salina*).

(F) For silversides, facilities for providing a supply of rotifers (*Brachionus plicatilis*) for approximately 11 days.

(G) Facilities (or access to facilities) for performing the required water chemistry analyses.

(vi) *Cleaning of equipment.* (A) Test substance delivery systems and test chambers should be cleaned before use. Test chambers should be cleaned during the test as needed to maintain the dissolved oxygen concentration, and to prevent clogging of the embryo cup screens and narrow flow passages.

(B) Debris can be removed with a rubber bulb and large pipette or by siphoning with a glass tube attached to a flexible hose. Debris should be run into

a bucket light enough to observe that no live fish are accidentally discarded.

(vii) *Dilution water*—(A) *General.* (*1*) A constant supply of acceptable dilution water should be available for use throughout the test. Dilution water shall be of a minimum quality such that the test species selected will survive in it for the duration of testing without showing signs of stress (e.g., loss of pigmentation, disorientation, poor response to external stimuli, excessive mucous secretion, lethargy, lack of feeding, or other unusual behavior). A better criterion for an acceptable dilution water for tests on early life stages should be such that the species selected for testing will survive, grow, and reproduce satisfactorily in it.

(*2*) The concentration of dissolved oxygen in the dilution water (fresh or salt) shall be between 90 percent and 100 percent saturation. When necessary, dilution water should be aerated by means of airstones, surface aerators, or screen tubes before the introduction of the test substance.

(*3*) Water that is contaminated with undesirable microoganisms (e.g., fish pathogens) shall not be used. If such contamination is suspected, the water should be passed through a properly maintained ultraviolet sterilizer equipped with an intensity meter before use. Efficacy of the sterilizer can be determined by using standard plate count methods.

(B) *Freshwater.* (*1*) Natural water (clean surface or ground water) is preferred, however, dechlorinated tap water may be used as a last resort. Reconstituted freshwater is not recommended as a practical dilution water for the early life stage toxicity test because of the large volume of water required.

(*2*) Particulate and dissolved substance concentrations should be measured at least twice a year and should meet the following specifications:

Substance	Concentration maximum
Particulate matter	<20 mg/liter.
Total organic carbon (TOC)	<2 mg/liter.
Chemical oxygen demand (COD)	<5 mg/liter.
Un-ionized ammonia	<1 μg/liter.
Residual chlorine	<1 μg/liter.
Total organoposphorus pesticides	<50 ng/liter.
Total organochlorine pesticides plus polychlorinated biphenyls (PCBs).	<50 ng/liter.
Total organic chlorine	<25 ng/liter.

(*3*) During any one month, freshwater dilution water should not vary more than 10 percent from the respective monthly averages of hardness, alkalinity and specific conductance; the monthly pH range should be less than 0.4 pH units.

(C) *Saltwater.* (*1*) Marine dilution water is considered to be of constant quality if the minimum salinity is greater than 15‰ and the weekly range of the salinity is less than 15‰. The monthly range of pH shall be less than 0.8 pH units. Saltwater shall be filtered to remove larval predators. A pore size of ≦20 micrometers (um) is recommended. For silversides, the recommended salinity is 20 ppt and shall be maintained between 15 and 25 ppt throughout testing.

(*2*) Artificial sea salts may be added to natural seawater during periods of low salinity to maintain salinity above 15‰.

(3) *Test parameters*—(i) *Dissolved oxygen concentration.* It is recommended that the dissolved oxygen concentration be maintained between 90 and 100 percent saturation; but it shall be no less than 75 percent saturation at all times for both minnow species and between 90 and 100 percent saturation for the trout species in all test chambers. Dilution water in the head box may be aerated, but the test solution itself shall not be aerated.

(ii) *Loading and flow rate.* (A) The loading in test chambers should not exceed 0.1 grams of fish per liter of test solution passing through the test chamber in 24 hours. The flow rate to each chamber should be a minimum of 6 tank volumes per 24 hours. During a test, the flow rates should not vary more than 10 percent from any one test chamber to any other.

(B) A lower loading or higher flow rate or both shall be used if necessary to meet the following three criteria at all times during the test in each chamber containing live test organisms:

(*1*) The concentration of dissolved oxygen shall not fall below 75 percent

saturation for the fathead and sheepshead minnows and 90 percent for the rainbow and brook trout;

(*2*) The concentration of un-ionized ammonia should not exceed 1 μ g/1; and

(*3*) The concentration of toxicant should not be lowered (i.e., caused by uptake by the test organisms and/or materials on the sides and bottoms of the chambers) more than 20 percent of the mean measured concentration.

(iii) *Temperature.* (A) The recommended test temperatures are:

(*1*) Fathead minnow——25 °C for all life stages.

(*2*) Sheepshead minnow——30 °C for all life stages.

(*3*) Rainbow and brook trout——10 °C for embryos. 12 °C for fry and alevins.

(*4*) Atlantic and tidewater silversides——25 °C for all life stages.

(B) Excursions from the test temperature shall be no greater than ±2.0°C. It is recommended that the test system be equipped with an automatic alarm system to alert staff of instantaneous temperature changes in excess of 2 °C. If the water is heated (i.e., for minnow species), precautions should be taken to ensure that supersaturation of dissolved gases is avoided. Temperatures shall be recorded in all test chambers at the beginning of the test and weekly thereafter. The temperature shall be recorded at least hourly in one test chamber throughout the test.

(iv) *Light.* (A) Brook and rainbow trout embryos shall be maintained in darkness or very low light intensity through one week post-hatch, at which time a 14-hour light and 10-hour dark photoperiod shall be provided.

(B) For fathead and sheepshead minnows, a 16-hour light and 8-hour dark (or 12:12) photoperiod shall be used throughout the test period.

(C) For silversides, a 14-hour light and 10-hour dark photoperiod shall be used throughout the test period.

(D) A 15-minute to 30-minute transition period between light and dark is optional.

(E) Light intensities ranging from 30 to 100 lumens at the water surface shall be provided; the intensity selected should be duplicated as closely as possible for all test chambers.

(e) *Reporting.* A report of the results of an early life stage toxicity test shall include the following:

(1) Name of test, sponsor, investigator, laboratory, and dates of test duration.

(2) Detailed description of the test substance including its source, lot number, composition (identity and concentration of major ingredients and major impurities), known physical and chemical properties, and any carriers (solvents) or other additives used.

(3) The source of the dilution water, its chemical characteristics, and a description of any pretreatment.

(4) Detailed information about the test organisms including scientific name and how verified and source history, observed diseases, treatments, acclimation procedure, and concentration of any contaminants and the method of measurement.

(5) A description of the experimental design and the test chambers, the depth and volume of the solution in the chambers, the way the test was begun, the number of organisms per treatment, the number of replicates, the loading, the lighting, a description of the test substance delivery system, and the flow rate as volume additions per 24 hours.

(6) Detailed information on feeding of fish during the toxicity test, including type of food used, its source, feeding frequency and results of analysis (i.e., concentrations) for contaminants.

(7) Number of embryos hatched, number of healthy embryos, time to hatch, mortality of embryos and fry, measurements of growth (weight and length), incidence of pathological or histological effects and observations of other effects or clinical signs, number of healthy fish at end of test.

(8) Number of organisms that died or showed an effect in the control and the results of analysis for concentration(s) of any contaminant in the control(s) should mortality occur.

(9) Methods used for, and the results of (with standard deviation), all chemical analyses of water quality and test substance concentration, including validation studies and reagent blanks; the average and range of the test temperature(s).

(10) Anything unusual about the test, any deviation from these procedures, and any other relevant information.

(11) A description of any abnormal effects and the number of fish which were affected during each period between observations in each chamber, and the average concentration of test substance in each test chamber.

(12) Reference to the raw data location.

[50 FR 39321, Sept. 27, 1985, as amended at 52 FR 19064, May 20, 1987]

§ 797.1930 Mysid shrimp acute toxicity test.

(a) *Purpose.* This guideline is intended for use in developing data on the acute toxicity of chemical substances and mixtures (''chemicals'') subject to environmental effects test regulations under the Toxic Substances Control Act (TSCA) (Pub. L. 94–469, 90 Stat. 2003, 15 U.S.C. 2601 *et seq.*). This guideline prescribes a test using mysid shrimp as test organisms to develop data on the acute toxicity of chemicals. The United States Environmental Protection Agency (EPA) will use data from these tests in assessing the hazard of a chemical to the aquatic environment.

(b) *Definitions.* The definitions in section 3 of the Toxic Substances Control Act (TSCA) and in part 792—*Good Laboratory Practice Standards* of this chapter, apply to this test guideline. The following definitions also apply to this guideline.

(1) ''Death'' means the lack of reaction of a test organism to gentle prodding.

(2) ''Flow-through'' means a continuous or an intermittent passage of test solution or dilution water through a test chamber or a holding or acclimation tank, with no recycling.

(3) ''LC_{50}'' means that experimentally derived concentration of test substance that is calculated to kill 50 percent of a test population during continuous exposure over a specified period of time.

(4) ''Loading'' means the ratio of test organisms biomass (grams, wet weight) to the volume (liters) of test solution in a test chamber.

(5) ''Retention chamber'' means a structure within a flow-through test chamber which confines the test organisms, facilitating observation of test organisms and eliminating loss of organisms in outflow water.

(6) ''Static system'' means a test chamber in which the test solution is not renewed during the period of the test.

(c) *Test procedures*—(1) *Summary of the test.* In preparation for the test, test chambers are filled with appropriate volumes of dilution water. If a flow-through test is performed, the flow of dilution water through each chamber is adjusted to the rate desired. The test substance is introduced into each test chamber. In a flow-through test, the rate at which the test substance is added is adjusted to establish and maintain the desired concentration of test substance in each test chamber. The test is started by randomly introducing mysids acclimated in accordance with the test design into the test chambers. Mysids in the test chambers are observed periodically during the test, the dead mysids removed and the findings recorded. Dissolved oxygen concentration, pH, temperature, salinity, the concentration of test substance, and other water quality characteristics are measured at specified intervals in test chambers. Data collected during the test are used to develop concentration-response curves and LC_{50} values for the test substance.

(2) [Reserved]

(3) *Range-finding test.* (i) A range-finding test should be conducted to determine:

(A) Which life stage (juvenile or young adult) is to be utilized in the definitive test.

(B) The test solution concentrations for the definitive test.

(ii) The mysids should be exposed to a series of widely spaced concentrations of test substance (e.g., 1, 10, 100 mg/l, etc.), usually under static conditions.

(iii) This test should be conducted with both newly hatched juvenile (< 24 hours old) and young adult (5 to 6 days old) mysids. For each age class (juvenile or young adult), a minimum of 10 mysids should be exposed to each concentration of test substance for up to 96 hours. The exposure period may be shortened if data suitable for the purpose of the range-finding test can be

obtained in less time. The age class which is most sensitive to the test substance in the range-finding test shall be utilized in the definitive test. When no apparent difference in sensitivity of the two life stages is found, juveniles shall be utilized in the definitive test. No replicates are required, and nominal concentrations of the chemical are acceptable.

(4) *Definitive test.* (i) The purpose of the definitive test is to determine the concentration-response curves and the 48- and 96-hour LC_{50} values with the minimum amount of testing beyond the range-finding test.

(ii) The definitive test shall be conducted on the mysid life stage (juveniles or young adults) which is most sensitive to the test substance being evaluated.

(iii) A minimum of 20 mysids per concentration shall be exposed to five or more concentrations of the chemical chosen in a geometric series in which the ratio is between 1.5 and 2.0 (e.g., 2, 4, 8, 16, 32, and 64 mg/l). An equal number of mysids shall be placed in two or more replicates. If solvents, solubilizing agents or emulsifiers have to be used, they shall be commonly used carriers and shall not possess a synergistic or antagonistic effect on the toxicity of the test substance. The concentration of solvent shall not exceed 0.1 ml/1. The concentration ranges shall be selected to determine the concentration-response curves and LC_{50} values at 48 and 96 hours.

(iv) Every test shall include controls consisting of the same dilution water, conditions, procedures, and mysids from the same population or culture container, except that none of the chemical is added.

(v) The dissolved oxygen concentration temperature, salinity, and pH shall be measured at the beginning and end of the test in each chamber.

(vi) The test duration is 96 hours. The test is unacceptable if more than 10 percent of the control organisms die or exhibit abnormal behavior during the 96 hour test period. Each test chamber should be checked for dead mysids at 24, 48, 72, and 96 hours after the beginning of the test. Concentration-response curves and 24-, 48-, 72- and 96-hour LC_{50} values should be determined along with their 95 percent confidence limits.

(vii) In addition to death, any abnormal behavior or appearance shall also be reported.

(viii) Test organisms shall be impartially distributed among test chambers in such a manner that test results show no significant bias from the distributions. In addition, test chambers within the testing area shall be positioned in a random manner or in a way in which appropriated statistical analyses can be used to determine the variation due to placement.

(ix) The concentration of the test substance in the chambers should be measured as often as is feasible during the test. At a minimum, during static tests the concentration of test substance shall be measured at each concentration at the beginning and at the end of the test. During the flow-through test, the concentration of test substance should be measured at the beginning and end of the test and in at least one appropriate chamber whenever a malfunction is detected in any part of the test substance delivery system. Equal aliquots of test solution may be removed from each replicate chamber and pooled for analysis. Among replicate test chambers of a treatment concentration, the measured concentration of the test substance should not vary more than 20 percent.

(5) [Reserved]

(6) *Analytical measurements*—(i) *Test chemical.* Deionized water should be used in making stock solutions of the test substance. Standard analytical methods should be used whenever available in performing the analyses. The analytical method used to measure the amount of test substance in a sample shall be validated before beginning the test by appropriate laboratory practices. An analytical method is not acceptable if likely degradation products of the test substance, such as hydrolysis and oxidation products, give positive or negative interferences which cannot be systematically identified and corrected mathematically.

(ii) *Numerical.* The number of dead mysids shall be counted during each definitive test. Appropriate statistical analyses should provide a goodness-of-

fit determination for the concentration-response curves. A 48- and 96-hour LC_{50} and corresponding 95 percent interval shall be calculated.

(d) *Test conditions*—(1) *Test species*—(i) *Selection*. (A) The mysid shrimp, *Mysidopsis bahia,* is the organism specified for these tests. Either juvenile (<24 hours old) or young adult (5 to 6 days old) mysids are to be used to start the test.

(B) Mysids to be used in chronic toxicity tests should originate from laboratory cultures in order to ensure the individuals are of similar age and experimental history. Mysids used for establishing laboratory cultures may be purchased commercially or collected from appropriate natural areas. Because of similarities with other mysids species, taxonomic verification should be obtained from the commercial supplier by experienced laboratory personnel or by an outside expert.

(C) Mysids used in a particular test shall be of similar age and be of normal size and appearance for their age. Mysids shall not be used for a test if they exhibit abnormal behavior or if they have been used in a previous test, either in a treatment or in a control group.

(ii) *Acclimation*. (A) Any change in the temperature and chemistry of the dilution water used for holding or culturing the test organisms to those of the test shall be gradual. Within a 24-hour period, changes in water temperature shall not exceed 1 °C, while salinity changes shall not exceed 5 percent.

(B) During acclimation mysids should be maintained in facilities with background colors and light intensities similar to those of the testing areas.

(iii) *Care and handling.* Methods for the care and handling of mysids such as those described in paragraph (f)(1) of this section can be used during holding, culturing and testing periods.

(iv) *Feeding.* Mysids should be fed during testing. Any food utilized should support survival, growth and reproduction of the mysids. A recommended food is live *Artemia* spp. (48-hour-old nauplii).

(2) *Facilities*—(i) *Apparatus.* (A) Facilities which may be needed to perform this test include: (*1*) flow-through or recirculating tanks for holding and acclimating mysids; (*2*) a mechanism for controlling and maintaining the water temperature during the holding, acclimation and test periods; (*3*) apparatus for straining particulate matter, removing gas bubbles, or aerating the water, as necessary; and (*4*) an apparatus for providing a 14-hour light and 10-hour dark photoperiod with a 15 to 30 minute transition period. In addition, for flow-through tests, flow-through chambers and a test substance delivery system are required. Furthermore, it is recommended that mysids be held in retention chambers within test chambers to facilitate observations and eliminate loss of test organisms through outflow water. For static tests, suitable chambers for exposing test mysids to the test substance are required. Facilities should be well ventilated and free of fumes and disturbances that may affect the test organisms.

(B) Test chambers shall be loosely covered to reduce the loss of test solution or dilution water due to evaporation and to minimize the entry of dust or other particulates into the solutions.

(ii) *Cleaning.* Test substance delivery systems and test chambers shall be cleaned before each test following standard laboratory practices.

(iii) *Construction materials.* (A) Materials and equipment that contact test solutions should be chosen to minimize sorption of test chemicals from dilution water and should not contain substances that can be leached into aqueous solution in quantities that can affect test results.

(B) For use in the flow-through test, retention chambers utilized for confinement of test organisms can be constructed with netting material of appropriate mesh size.

(iv) *Dilution water.* (A) Natural or artificial seawater is acceptable as dilution water if mysids will survive and successfully reproduce in it for the duration of the holding, acclimating and testing periods without showing signs of stress, such as reduced growth and fecundity. Mysids shall be cultured and tested in dilution water from the same origin.

(B) Natural seawater shall be filtered through a filter with a pore size of <20 microns prior to use in a test.

(C) Artificial seawater can be prepared by adding commercially available formulations or by adding specific amounts of reagent-grade chemicals to deionized water. Deionized water with a conductivity less than 1 μ ohm/cm at 12 °C is acceptable for making artificial seawater. When deionized water is prepared from a ground or surface water source, conductivity and total organic carbon (or chemical oxygen demand) shall be measured on each batch.

(v) *Test substance delivery system.* In flow-through tests, proportional diluters, metering pumps, or other suitable systems should be used to deliver test substance to the test chambers. The system used shall be calibrated before each test. Calibration includes determining the flow rate through each chamber and the concentration of the test substance in each chamber. The general operation of the test substance delivery system should be checked twice daily during a test. The 24-hour flow through a test chamber shall be equal to at least 5 times the volume of the test chamber. During a test, the flow rates should not vary more than 10 percent among test chambers or across time.

(3) *Test parameters.* Environmental parameters of the water contained in test chambers shall be maintained as specified below:

(i) The test temperature shall be 25°C. Excursions from the test temperature shall be not greater than ± 2°C.

(ii) Dissolved oxygen concentration between 60 and 105 percent saturation. Aeration, if needed to achieve this level, shall be done before the addition of the test substance. All treatment and control chambers shall be given the same aeration treatment.

(iii) The number of mysids placed in a test solution shall not be so great as to affect results of the test. Loading shall not exceed 30 mysids per liter for a static test. Loading requirements for the flow-through test will vary depending on the flow rate of dilution water. The loading shall not cause the dissolved oxygen concentration to fall below the recommended levels.

(iv) Photoperiod of 14 hours light and 10 hours darkness, with a 15 to 30 minute transition period.

(v) Salinity of 20 parts per thousand ±3 percent.

(e) *Reporting.* The sponsor shall submit to the EPA all data developed during the test that are suggestive or predictive of acute toxicity and all concomitant toxicologic manifestations. In addition to the general reporting requirements prescribed in part 792—*Good Laboratory Practice Standards* of this chapter, the reporting of test data shall include the following:

(1) The source of the dilution water, its chemical characteristics (e.g., salinity, pH, etc.) and a description of any pretreatment.

(2) Detailed information about the test organisms, including the scientific name and method of verification, age, source, history, abnormal behavior, acclimation procedures and food used.

(3) A description of the test chambers, the depth and volume of solution in the chamber, the way the test was begun (e.g., conditioning, test substance additions, etc.), the number of organisms per treatment, the number of replicates, the loading, the lighting, the test substance delivery system and the flow rate expressed as volume additions per 24 hours.

(4) The measured concentration of test substance in test chambers at the times designated.

(5) The number and percentage of organisms that died or showed any other adverse effects in the control and in each treatment at each observation period.

(6) Concentration-response curves shall be fitted to mortality data collected at 24, 48, 72, and 96 hours. A statistical test of goodness-of-fit shall be performed and the results reported.

(7) The 96-hour LC_{50} and when sufficient data have been generated, the 24-, 48-, and 72-hour LC_{50}'s and the corresponding 95-percent confidence limits and the methods used to calculate the values. These calculations shall be made using the average measured concentration of the test substance.

(8) Methods and data records of all chemical analyses of water quality and

test substance concentrations, including method validations and reagent blanks.

(9) The data records of the holding, acclimation and test temperature and salinity.

(f) *References.* For additional background information on this test guideline the following references should be consulted:

(1) U.S. Environmental Protection Agency, ''Bioassay Procedures for the Ocean Disposal Permit Program,'' EPA Report No. 600–9–78–010 (Gulf Breeze, Florida, 1978).

(2) [Reserved]

[50 FR 39321, Sept. 27, 1985, as amended at 52 FR 19068, May 20, 1987; 52 FR 26150, July 13, 1987]

§ 797.1950 Mysid shrimp chronic toxicity test.

(a) *Purpose.* This guideline is intended for use in developing data on the chronic toxicity of chemical substances and mixtures (''chemicals'') subject to environmental effects test regulations under the Toxic Substances Control Act (TSCA) (Pub. L. 94–469, 90 Stat. 2003, 15 U.S.C. 2601 *et seq.*). This guideline prescribes tests using mysids as test organisms to develop data on the chronic toxicity of chemicals. The United States Environmental Protection Agency (EPA) will use data from these tests in assessing the hazard of a chemical to the aquatic environment.

(b) *Definitions.* The definitions in section 3 of the Toxic Substances Control Act (TSCA) and in part 792—*Good Laboratory Practice Standards* of this chapter apply to this test guideline. The following definitions also apply to this guideline:

(1) ''Chronic toxicity test'' means a method used to determine the concentration of a substance that produces an adverse effect from prolonged exposure of an organism to that substance. In this test, mortality, number of young per female and growth are used as measures of chronic toxicity.

(2) ''Death'' means the lack of reaction of a test organism to gentle prodding.

(3) ''Flow-through'' means a continuous or an intermittent passage of test solution or dilution water through a test chamber or a holding or acclimation tank, with no recycling.

(4) ''G1 (Generation 1)'' means those mysids which are used to begin the test, also referred to as adults; G2 (Generation 2) are the young produced by G1.

(5) ''LC_{50}'' means that experimentally derived concentration of test substance that is calculated to kill 50 percent of a test population during continuous exposure over a specified period of time.

(6) ''Loading'' means the ratio of test organism biomass (gram, wet weight) to the volume (liters) of test solution in a test chamber.

(7) ''MATC'' (Maximum Acceptable Toxicant Concentration) means the maximum concentration at which a chemical can be present and not be toxic to the test organism.

(8) ''Retention chamber'' means a structure within a flow-through test chamber which confines the test organisms, facilitating observation of test organisms and eliminating washout from test chambers.

(c) *Test procedures*—(1) *Summary of the test.* (i) In preparation for the test, the flow of test solution through each chamber is adjusted to the rate desired. The test substance is introduced into each test chamber. The rate at which the test substance is added is adjusted to establish and maintain the desired concentration of test substance in each test chamber. The test is started by randomly introducing mysids acclimated in accordance with the test design into retention chambers within the test and the control chambers. Mysids in the test and control chambers are observed periodically during the test, the dead mysids removed and the findings reported.

(ii) Dissolved oxygen concentration, pH, temperature, salinity, the concentration of test substance and other water quality characteristics are measured at specified intervals in selected test chambers.

(iii) Data collected during the test are used to develop a MATC (Maximum Acceptable Toxicant Concentration) and quantify effects on specific chronic parameters.

(2) [Reserved]

(3) *Range-finding test.* (i) A range-finding test should be conducted to establish test solution concentrations for the definitive test.

(ii) The mysids should be exposed to a series of widely spaced concentrations of the test substance (e.g., 1, 10, 100 mg/l), usually under static conditions.

(iii) A minimum of 10 mysids should be exposed to each concentration of test substance for a period of time which allows estimation of appropriate chronic test concentrations. No replicates are required and nominal concentrations of the chemical are acceptable.

(4) *Definitive test.* (i) The purpose of the definitive test is to determine concentration-response curves, LC_{50} values, and effects of a chemical on growth and reproduction during chronic exposure.

(ii) A minimum of 40 mysids per concentration shall be exposed to four or more concentrations of the chemical chosen in a geometric series in which the ratio is between 1.5 and 2.0 (e.g., 2, 4, 8, 16, 32, and 64 mg/1). An equal number of mysids shall be placed in two or more replicates. If solvents, solubilizing agents or emulsifiers have to be used, they shall be commonly used carriers and shall not possess a synergistic or antagonistic effect on the toxicity of the test substance. The concentration of solvent should not exceed 0.1 ml/1. The concentration ranges should be selected to determine the concentration response curves, LC_{50} values and MATC. Concentration of test substance in test solutions should be analyzed prior to use.

(iii) Every test should include controls consisting of the same dilution water, conditions, procedures and mysids from the same population or culture container, except that none of the chemical is added.

(iv) The dissolved oxygen concentration, temperature, salinity, and pH shall be measured weekly in each chamber.

(v) The test duration is 28 days. The test is unacceptable if more than 20 percent of the control organisms die, appear stressed or are diseased during the test. The number of dead mysids in each chamber shall be recorded on days 7, 14, 21, and 28 of the test. At the time when sexual characteristics are discernible in the mysids (approximately 10 to 12 days in controls; possible delays may occur in mysids exposed to test substances), the number of males and females (identified by ventral brood pouch) in each chamber shall be recorded. Body length (as measured by total midline body length, from the anterior tip of the carapace to the posterior margin of the uropod) shall be recorded for males and females at the time when sex can be determined simultaneously for all mysids in control and treatment groups. This time cannot be specified because of possible delays in sexual maturation of mysids exposed to test substances. A second observation of male and female body lengths shall be conducted on day 28 of the test. To reduce stress on the mysids, body lengths can be recorded by photography through a stereomicroscope with appropriate scaling information. As offspring are produced by the G1 mysids (approximately 13 to 16 days in controls), the young shall be counted and separated into retention chambers at the same test substance concentration as the chambers where they originated. If available prior to termination of the test, observations on the mortality, number of males and females and male and female body length shall be recorded for the G2 mysids. Concentration-response curves, LC_{50} values and associated 95 percent confidence limits for the number of dead mysids (G1) shall be determined for days 7, 14, 21, and 28. An MATC shall be determined for the most sensitive test criteria measured (cumulative mortality of adult mysids, number of young per female, and body lengths of adult males and females).

(vi) In addition to death, any abnormal behavior or appearance shall also be reported.

(vii) Test organisms shall be impartially distributed among test chambers in such a manner that test results show no significant bias from the distributions. In addition, test chambers within the testing area shall be positioned in a random manner or in a way in which appropriate statistical analyses can be used to determined the variation due to placement.

(viii) The concentration of the test substance in the chambers should be measured as often as is feasible during

the test. The concentration of test substance shall be measured:

(A) At each test concentration at the beginning of the test and on days 7, 14, 21, and 28; and

(B) In at least one appropriate chamber whenever a malfunction is detected in any part of the test substance delivery system.

Equal aliquots of test solutions may be removed from each test chamber and pooled for analysis. Among replicate test chambers of a treatment concentration, the measured concentration of the test substance should not vary more than 20 percent.

(5) [Reserved]

(6) *Analytical measurements*—(i) *Test chemical.* Deionized water should be used in making stock solutions of the test substance. Standard analytical methods should be employed whenever available in performing the analyses. The analytical method used to measure the amount of test substance in a sample shall be validated before beginning the test by appropriate laboratory practices. An analytical method is not acceptable if likely degradation products of the test substance, such as hydrolysis and oxidation products, give positive or negative interferences which cannot be systematically identified and corrected mathematically.

(ii) *Numerical.* (A) The number of dead mysids, cumulative young per female, and body lengths of male and female mysids shall be recorded during each definitive test. Appropriate statistical analyses shall provide a goodness-of-fit determination for the day 7, 14, 21 and 28 adult (Gl) death concentration-response curves.

(B) A 7-, 14-, 21- and 28-day LC_{50}, based on adult (Gl) death, and corresponding 95 percent confidence intervals shall be calculated. Appropriate statistical tests (e.g., analysis of variance, mean separation test) should be used to test for significant chemical effects on chronic test criteria (cumulative mortality of adults, cumulative number of young per female and body lengths of adult male and females) on designated days. An MATC shall be calculated using these chronic tests criteria.

(d) *Test conditions*—(1) *Test species*—(i) *Selection.* (A) The mysid shrimp, *Mysidopsis bahia,* is the organism specified for these tests. Juvenile mysids, ≦24 hours old, are to be used to start the test.

(B) Mysids to be used in chronic toxicity tests should originate from laboratory cultures in order to ensure the individuals are of similar age and experimental history. Mysids used for establishing laboratory cultures may be purchased commercially or collected from appropriate natural areas. Because of similarities with other mysid species, taxonomic verification should be obtained from the commercial supplier, by experienced laboratory personnel, or by an outside expert.

(C) Mysids used in a particular test shall be of similar age and be of normal size and appearance for their age.

(D) Mysids shall not be used for a test if they exhibit abnormal behavior, or if they have been used in a previous test, either in a treatment or in a control group.

(ii) *Acclimation.* (A) Any change in the temperature and chemistry of the water used for holding or culturing the test organisms to those of the test should be gradual. Within a 24-hour period, changes in water temperature should not exceed 1 °C, while salinity changes should not exceed 5 percent.

(B) During acclimation mysids should be maintained in facilities with background colors and light intensities similar to those of the testing areas.

(iii) *Care and handling.* Methods for the care and handling of mysids such as those described in paragraph (f)(1) of this section can be used during holding, culturing and testing periods.

(iv) *Feeding.* Mysids should be fed during testing. Any food utilized should support survival, growth and reproduction of the mysids. A recommended food is live *Artemia* spp. nauplii (approximately 48 hours old).

(2) *Facilities*—(i) *Apparatus.* (A) Facilities which may be needed to perform this test include: (*1*) flow-through or recirculating tanks for holding and acclimating mysids; (*2*) a mechanism for controlling and maintaining the water temperature during the holding, acclimation and test periods; (*3*) apparatus for straining particulate matter, removing gas bubbles, or aerating the

water, as necessary; and (*4*) an apparatus for providing a 14-hour light and 10-hour dark photoperiod with a 15- to 30-minute transition period. In addition, flow-through chambers and a test substance delivery system are required. It is recommended that mysids be held in retention chambers within test chambers to facilitate observations and eliminate loss through outflow water.

(B) Facilities should be well ventilated and free of fumes and disturbances that may affect test organisms.

(C) Test chambers shall be loosely covered to reduce the loss of test solution or dilution water due to evaporation and to minimize the entry of dust or other particulates into the solutions.

(ii) *Cleaning.* Test substance delivery systems and test chambers shall be cleaned before each use following standard laboratory practices.

(iii) *Construction materials.* (A) Materials and equipment that contact test solutions should be chosen to minimize sorption of test chemicals from the dilution water and should not contain substances that can be leached into aqueous solution in quantities that can affect the test results.

(B) Retention chambers utilized for confinement of test organisms can be constructed with netting material of appropriate mesh size.

(iv) *Dilution water.* (A) Natural or artificial seawater is acceptable as dilution water if mysids will survive and successfully reproduce in it for the duration of the holding, acclimating and testing periods without showing signs of stress, such as reduced growth and fecundity. Mysids shall be cultured and tested in dilution water from the same origin.

(B) Natural seawater shall be filtered through a filter with a pore size of >20 microns prior to use in a test.

(C) Artificial seawater can be prepared by adding commercially available formulations or by adding specific amounts of reagent-grade chemicals to deionized or glass-distilled water. Deionized water with a conductivity less than 1 μ ohm/cm at 12 °C is acceptable as the diluent for making artificial seawater. When deionized water is prepared from a ground or surface water source, conductivity and total organic carbon (or chemical oxygen demand) shall be measured on each batch.

(v) *Test substance delivery system.* Proportional diluters, metering pumps, or other suitable systems should be used to deliver test substance to the test chambers. The system used shall be calibrated before each test. Calibration includes determining the flow rate and the concentration of the test substance in each chamber. The general operation of the test substance delivery system should be checked twice daily during a test. The 24-hour flow rate through a chamber shall be equal to at least 5 times the volume of the chamber. The flow rates should not vary more than 10 percent among chambers or across time.

(3) *Test parameters.* Environmental parameters of the water contained in test chambers shall be maintained as specified below:

(i) The test temperature shall be 25 °C. Excursions from the test temperature shall be no greater than ±2 °C.

(ii) Dissolved oxygen concentration between 60 and 105 percent saturation. Aeration, if needed to achieve this level, shall be done before the addition of the test substance. All treatment and control chambers shall be given the same aeration treatment.

(iii) The number of mysids placed in a test solution shall not be so great as to affect results of the test. Loading requirements for the test will vary depending on the flow rate of dilution water. The loading shall not cause the dissolved oxygen concentration to fall below the recommended levels.

(iv) Photoperiod of 14 hours light and 10 hours darkness, with a 15–30 minute transition period.

(v) Salinity of 20 parts per thousand ±3 percent.

(e) *Reporting.* The sponsor shall submit to the EPA all data developed by the test that are suggestive or predictive of chronic toxicity and all concomitant toxicologic manifestations. In addition to the general reporting requirements prescribed in part 792—*Good Laboratory Practice Standards* of this chapter, the reporting of test data shall include the following:

(1) The source of the dilution water, its chemical characteristics (e.g., salinity, pH, etc.) and a description of any pretreatment.

(2) Detailed information about the test organisms, including the scientific name and method of verification, average length, age, source, history, observed diseases, treatments, acclimation procedures and food used.

(3) A description of the test chambers, the depth and volume of solution in the chamber, the way the test was begun (e.g., conditioning, test substance additions, etc.), the number of organisms per treatment, the number of replicates, the loading, the lighting, the test substance delivery system, and the flow rate expressed as volume additions per 24 hours.

(4) The measured concentration of test substance in test chambers at the times designated.

(5) The first time (day) that sexual characteristics can be observed in controls and in each test substance concentration.

(6) The length of time for the appearance of the first brood for each concentration.

(7) The means (average of replicates) and respective 95 percent confidence intervals for:

(i) Body length of males and females at the first observation day (depending on time of sexual maturation) and on day 28.

(ii) Cumulative number of young produced per female on day 28.

(iii) Cumulative number of dead adults on day 7, 14, 21 and 28.

(iv) If available prior to test termination (day 28), effects on G2 mysids (number of males and females, body length of males and females and cumulative mortality).

(8) The MATC is calculated as the geometric mean between the lowest measured test substance concentration that had a significant ($P<0.05$) effect and the highest measured test substance concentration that had no significant ($P<0.05$) effect in the chronic test. The most sensitive of the test criteria for adult (Gl) mysids (cumulative number of dead mysids, body lengths of males and females or the number of young per female) is used to calculate the MATC. The criterion selected for MATC computation is the one which exhibits an effect (a statistically significant difference between treatment and control groups; $P<0.05$) at the lowest test substance concentration for the shortest period of exposure. Appropriate statistical tests (analysis of variance, mean separation test) should be used to test for significant chemical effects. The statistical tests employed and the results of these tests shall be reported.

(9) Concentration-response curves shall be fitted to the cumulative number of adult dead for days 7, 14, 21, and 28. A statistical test of goodness-of-fit shall be performed and the results reported.

(10) An LC_{50} value based on the number of dead adults with corresponding 95 percent confidence intervals for days 7, 14, 21 and 28. These calculations shall be made using the average measured concentration of the test substance.

(11) Methods and data records of all chemical analyses of water quality and test substance concentrations, including method validations and reagent blanks.

(12) The data records of the holding, acclimation and test temperature and salinity.

(f) *References.* For additional background information on this test guideline the following references should be consulted:

(1) U.S. Environmental Protection Agency, ''Bioassay Procedures for the Ocean Disposal Permit Program,'' EPA Report No. 600/9–78–010 (Gulf Breeze, Florida, 1978).

(2) [Reserved]

[50 FR 39321, Sept. 27, 1985, as amended at 52 FR 19069, May 20, 1987]

PART 798—HEALTH EFFECTS TESTING GUIDELINES

Subpart A–B [Reserved]

Subpart C—Subchronic Exposure

Sec.
798.2250 Dermal toxicity.
798.2450 Inhalation toxicity.
798.2650 Oral toxicity.

Subpart D—Chronic Exposure

798.3260 Chronic toxicity.
798.3300 Oncogenicity.

798.3320 Combined chronic toxicity/oncogenicity.

Subpart E—Specific Organ/Tissue Toxicity

798.4100 Dermal sensitization.
798.4350 Inhalation developmental toxicity study.
798.4700 Reproduction and fertility effects.
798.4900 Developmental toxicity study.

Subpart F—Genetic Toxicity

798.5195 Mouse biochemical specific locus test.
798.5200 Mouse visible specific locus test.
798.5265 The salmonella typhimurium reverse mutation assay.
798.5275 Sex-linked recessive lethal test in drosophila melanogaster.
798.5300 Detection of gene mutations in somatic cells in culture.
798.5375 In vitro mammalian cytogenetics.
798.5385 In vivo mammalian bone marrow cytogenetics tests: Chromosomal analysis.
798.5395 In vivo mammalian bone marrow cytogenetics tests: Micronucleus assay.
798.5450 Rodent dominant lethal assay.
798.5460 Rodent heritable translocation assays.
798.5500 Differential growth inhibition of repair proficient and repair deficient bacteria: ''Bacterial DNA damage or repair tests.''
798.5955 Heritable translocation test in drosophila melanogaster.

Subpart G—Neurotoxicity

798.6050 Functional observational battery.
798.6200 Motor activity.
798.6400 Neuropathology.
798.6500 Schedule-controlled operant behavior.
798.6560 Subchronic delayed neurotoxicity of organophosphorus substances.

AUTHORITY: 15 U.S.C. 2603.

SOURCE: 50 FR 39397, Sept. 27, 1985, unless otherwise noted.

Subpart A–B [Reserved]

Subpart C—Subchronic Exposure

§ 798.2250 Dermal toxicity.

(a) *Purpose.* In the assessment and evaluation of the toxic characteristics of a chemical, the determination of subchronic dermal toxicity may be carried out after initial information on toxicity has been obtained by acute testing. The subchronic dermal study has been designed to permit the determination of the no-observed-effect level and toxic effects associated with continuous or repeated exposure to a test substance for a period of 90 days. The test is not capable of determining those effects that have a long latency period for development (e.g., carcinogenicity and life shortening). It provides information on health hazards likely to arise from repeated exposure by the dermal route over a limited period of time. It will provide information on target organs, the possibilities of accumulation, and can be of use in selecting dose levels for chronic studies and for establishing safety criteria for human exposure.

(b) *Definitions.* (1) Subchronic dermal toxicity is the adverse effects occurring as a result of the repeated daily exposure of experimental animals to a chemical by dermal application for part (approximately 10 percent) of a life span.

(2) Dose in a dermal test is the amount of test substance applied to the skin (applied daily in subchronic tests). Dose is expressed as weight of the substance (g, mg) per unit weight of test animal (e.g., mg/kg).

(3) No-effect level/No-toxic-effect level/No-adverse-effect level/No-observed-effect level is the maximum dose used in a test which produces no observed adverse effects. A no-observed-effect level is expressed in terms of the weight of a test substance given daily per unit weight of test animal (mg/kg).

(4) Cumulative toxicity is the adverse effects of repeated doses occurring as a result of prolonged action on, or increased concentration of the administered test substance or its metabolites in susceptible tissues.

(c) *Principle of the test method.* The test substance is applied daily to the skin in graduated doses to several groups of experimental animals, one dose level per unit group, for a period of 90 days. During the period of application the animals are observed daily to detect signs of toxicity. Animals which die during the test are necropsied, and at the conclusion of the test the surviving animals are sacrificed and necropsied and appropriate histopathological examinations carried out.

(d) *Limit test.* If a test at one dose level of at least 1,000 mg/kg body weight (expected human exposure may indicate the need for a higher dose level), using the procedures described for this study, produces no observable toxic effects and if toxicity would not be expected based upon data of structurally related compounds, then a full study using three dose levels might not be necessary.

(e) *Test procedures*—(1) *Animal selection*—(i) *Species and strain.* A mammalian species shall be used for testing. The rat, rabbit, or guinea pig may be used, although the albino rabbit is preferred. The albino rabbit is preferred because of its size, skin permeability, and extensive data base. Commonly used laboratory strains shall be employed. If another mammalian species is used, the tester shall provide justification/reasoning for its selection.

(ii) *Age.* Young adult animals shall be used. The following weight ranges at the start of the test are suggested in order to provide animals of a size which facilitates the conduct of the test: rats, 200 to 300 g; rabbits, 2.0 to 3.0 kg; guinea pigs, 350 to 450 g.

(iii) *Sex.* (A) Equal numbers of animals of each sex with healthy skin shall be used at each dose level.

(B) The females shall be nulliparous and nonpregnant.

(iv) *Numbers.* (A) At least 20 animals (10 females and 10 males) shall be used at each dose level.

(B) If interim sacrifices are planned, the number shall be increased by the number of animals scheduled to be sacrificed before completion of the study.

(2) *Control groups.* A concurrent control group is required. This group shall be an untreated or sham-treated control group or, if a vehicle is used in administering the test substance, a vehicle control group. If the toxic properties of the vehicle are not known or cannot be made available, both untreated and vehicle control groups are required.

(3) *Satellite group.* A satellite group of 20 animals (10 animals per sex) may be treated with the high dose level for 90 days and observed for reversibility, persistence, or delayed occurrence, of toxic effects for a posttreatment period of appropriate length, normally not less than 28 days.

(4) *Dose level and dose selection.* (i) In subchronic toxicity tests, it is desirable to have a dose-response relationship as well as a no-observed-toxic-effect level. Therefore, at least 3 dose levels with a control and, where appropriate, a vehicle control (corresponding to the concentration of vehicle at the highest exposure level) shall be used. Doses should be spaced appropriately to produce test groups with a range of toxic effects. The data shall be sufficient to produce a dose-response curve.

(ii) The highest dose level should result in toxic effects but not produce severe skin irritation or an incidence of fatalities which would prevent a meaningful evaluation.

(iii) The lowest dose level should not produce any evidence of toxicity. Where there is a usable estimation of human exposure, the lowest dose level should exceed this.

(iv) Ideally, the intermediate dose level(s) should produce minimal observable toxic effects. If more than one intermediate dose is used, the dose levels should be spaced to produce a gradation of toxic effects.

(v) In the low and intermediate groups and in the controls the incidence of fatalities should be low, to permit a meaningful evaluation of the results.

(5) *Exposure conditions.* The animals are treated with test substance, ideally for at least 6 hours per day on a 7-day per week basis, for a period of 90 days. However, based primarily on practical considerations, application on a 5-day per week basis is considered to be acceptable.

(6) *Observation period.* (i) Duration of observation shall be at least 90 days.

(ii) Animals in the satellite group scheduled for followup observations should be kept for at least 28 days further without treatment to detect recovery from, or persistence of, toxic effects.

(7) *Preparation of animal skin.* (i) Shortly before testing, fur shall be clipped from the dorsal area of the trunk of the test animals. Shaving may be employed, but it should be carried out approximately 24 hours before the

test. Repeat clipping or shaving is usually needed at approximately weekly intervals. When clipping or shaving the fur, care should be taken to avoid abrading the skin, which could alter its permeability.

(ii) Not less than 10 percent of the body surface area should be clear for the application of the test substance. The weight of the animal should be taken into account when deciding on the area to be cleared and on the dimensions of any covering used.

(iii) When testing solids, which may be pulverized if appropriate, the test substance should be moistened sufficiently with water or, where necessary, a suitable vehicle to ensure good contact with the skin. When a vehicle is used, the influence of the vehicle on toxicity of and penetration of the skin by the test substance should be taken into account.

(8) *Application of the test substance.* (i) The test substance shall be applied uniformly over an area which is approximately 10 percent of the total body surface area. With highly toxic substances, the surface area covered may be less, but as much of the area shall be covered with as thin and uniform a film as possible.

(ii) During the exposure period, the test substance shall be held in contact with the skin with a porous gauze dressing and nonirritating tape. The test site shall be further covered in a suitable manner to retain the gauze dressing and test substance and ensure that the animals cannot ingest the test substance. Restrainers may be used to prevent the ingestion of the test substance, but complete immobilization is not a recommended method.

(9) *Observation of animals.* (i) Each animal shall be observed daily, and if necessary handled to appraise its physical condition.

(ii) Additional observations shall be made daily with appropriate actions taken to minimize loss of animals to the study (e.g., necropsy or refrigeration of those animals found dead and isolation or sacrifice of weak or moribund animals).

(iii) Signs of toxicity shall be recorded as they are observed, including the time of onset, the degree, and duration.

(iv) Cage-side observations shall include, but not be limited to, changes in skin and fur, eyes and mucous membranes, respiratory, circulatory, autonomic and central nervous systems, somatomotor activity and behavior pattern.

(v) Animals shall be weighed weekly. Feed consumption shall also be determined weekly if abnormal body weight changes are observed.

(vi) At the end of the study period, all survivors in the nonsatellite treatment groups shall be sacrificed. Moribund animals shall be removed and sacrificed when noticed.

(10) *Clinical examinations.* (i) The following examinations shall be made on all animals of each sex in each group:

(A) Certain hematology determinations shall be carried out at least two times during the test period on all groups of animals including concurrent controls: After 30 days of test and just prior to terminal sacrifice at the end of the test period. Hematology determinations which are appropriate to all studies: Hematocrit, hemoglobin concentration, erythrocyte count, total and differential leukocyte count, and a measure of clotting potential such as clotting time, prothrombin time, thromboplastin time, or platelet count.

(B) Certain clinical biochemistry determinations on blood should be carried out at least two times during the test period on all groups of animals including concurrent controls: After 30 days of test and just prior to terminal sacrifice at the end of the test period. Clinical biochemistry test areas which are considered appropriate to all studies: Electrolyte balance, carbohydrate metabolism, and liver and kidney function. The selection of specific tests will be influenced by observations on the mode of action of the substance. Suggested determinations: Calcium, phosphorus, chloride, sodium, potassium, fasting glucose (with period of fasting appropriate to the species), serum glutamic pyruvic transaminase (now known as serum alanine aminotransferase), serum glutamic oxaloacetic transaminase (now known as serum aspartate aminotransferase), ornithine decarboxylase, gamma glutamyl transpeptidase, urea nitrogen, albumen blood creatinine, total bilirubin, and

total serum protein measurements. Other determinations which may be necessary for an adequate toxicological evaluation include: Analyses of lipids, hormones, acid/base balance, methemoglobin, and cholinesterase activity. Additional clinical biochemistry may be employed, where necessary, to extend the investigation of observed effects.

(ii) The following examinations shall be made on high dose and control groups. If changes in the eyes are detected all animals should be examined.

(A) Ophthalmological examination, using an ophthalmoscope or equivalent suitable equipment, shall be made prior to exposure to the test substance and at the termination of the study.

(B) Urinalysis is not recommended on a routine basis, but only when there is an indication based on expected or observed toxicity.

(11) *Gross necropsy*. (i) All animals shall be subjected to a full gross necropsy which includes examination of the external surface of the body, all orifices, and the cranial, thoracic, and abdominal cavities and their contents.

(ii) The liver, kidneys, adrenals, brain, and gonads shall be weighed wet, as soon as possible after dissection, to avoid drying. In addition, for the rodent, the brain; for the non-rodent, the thyroid with parathyroids also shall be weighed wet.

(iii) The following organs and tissues, or representative samples thereof, shall be preserved in a suitable medium for possible future histopathological examination: All gross lesions; lungs—which should be removed intact, weighed, and treated with a suitable fixative to ensure that lung structure is maintained (perfusion with the fixative is considered to be an effective procedure); nasopharyngeal tissues; brain—including sections of medulla/pons, cerebellar cortex, and cerebral cortex; pituitary; thyroid/parathyroid; thymus; trachea; heart; sternum with bone marrow; salivary glands; liver; spleen; kidneys; adrenals; pancreas; gonads; uterus; accessory genital organs (epididymis, prostate, and, if present, seminal vesicles); aorta; (skin); gall bladder (if present); esophagus; stomach; duodenum; jejunum; ileum; cecum; colon; rectum; urinary bladder; representative lymph node; (mammary gland); (thigh musculature); peripheral nerve; (eyes); (femur—including articular surface); (spinal cord at three levels—cervical, midthoracic, and lumbar); and (zymbal and exorbital lachrymal glands).

(12) *Histopathology*. The following histopathology shall be performed:

(i) Full histopathology on normal and treated skin and on organs and tissues, listed above, of all animals in the control and high dose groups.

(ii) All gross lesions in all animals.

(iii) Target organs in all animals.

(iv) The tissues listed in parenthesis in paragraph (e)(11)(iii) of this section, if indicated by signs of toxicity or expected target organ involvement.

(v) Lungs of animals (rodents) in the low and intermediate dose groups shall be subjected to histopathological examination for evidence of infection, since this provides a convenient assessment of the state of health of the animals.

(vi) When a satellite group is used, histopathology shall be performed on tissues and organs identified as showing effects in the treated groups.

(f) *Data and reporting*—(1) *Treatment of results*. (i) Data shall be summarized in tabular form, showing for each test group the number of animals at the start of the test, the number of animals showing lesions, the types of lesions, and the percentage of animals displaying each type of lesion.

(ii) All observed results, quantitative and incidental, should be evaluated by an appropriate statistical method. Any generally accepted statistical method may be used; the statistical methods should be selected during the design of the study.

(2) *Evaluation of results*. The findings of a subchronic dermal toxicity study should be evaluated in conjunction with the findings of preceding studies and considered in terms of the observed toxic effects and the necropsy and histopathological findings. The evaluation should include the relationship between the dose of the test substance and the presence or absence, the incidence and severity, of abnormalities, including behavioral and clinical abnormalities, gross lesions, identified

target organs, body weight changes, effect on mortality and any other general or specific toxic effects. A properly conducted subchronic test should provide a satisfactory estimation of a no-effect level.

(3) *Test report.* In addition to the reporting requirements as specified in the EPA Good Laboratory Practice Standards under 40 CFR part 792, subpart J, the following specific information shall be reported.

(i) *Group animal data.* Tabulation of toxic response data by species, strain, sex and exposure level for:

(A) Number of animals dying.

(B) Number of animals showing signs of toxicity.

(C) Number of animals exposed.

(ii) *Individual animal data.* (A) Date of death during the study or whether animals survived to termination.

(B) Date of observation of each abnormal sign and its subsequent course.

(C) Body weight data.

(D) Feed consumption data when collected.

(E) Hematological tests employed and all results.

(F) Clinical biochemistry tests employed and all results.

(G) Necropsy findings.

(H) Detailed description of all histopathological findings.

(I) Statistical treatment of results where appropriate.

(g) *References.* For additional background information on this test guideline the following references should be consulted:

(1) Draize, J.H. ''Dermal toxicity,'' *Appraisal of Chemicals in Food, Drugs and Cosmetics.* The Association of Food and Drug Officials of the United States (1959, 3rd printing 1975). pp. 46–59.

(2) Fitzhugh, O.G. ''Subacute toxicity,'' *Appraisal of the Safety of Chemicals in Foods, Drugs and Cosmetics.* The Association of Food and Drug Officials of the United States (1959, 3rd printing 1975). pp. 26–35.

(3) National Academy of Sciences. ''Principles and Procedures for Evaluating the Toxicity of Household Substances,'' a report prepared by the Committee for the Revision of NAS Publication 1138, under the auspices of the Committee on Toxicology, National Research Council, National Academy of Sciences, Washington, DC (1977).

(4) World Health Organization. ''Part I. Environmental Health Criteria 6,''*Principles and Methods for Evaluating the Toxicity of Chemicals.* (Geneva: World Health Organization, 1978).

[50 FR 39397, Sept. 27, 1985, as amended at 52 FR 19072, May 20, 1987; 53 FR 49149, Dec. 6, 1988; 54 FR 21064, May 16, 1989]

§ 798.2450 Inhalation toxicity.

(a) *Purpose.* In the assessment and evaluation of the toxic characteristics of a gas, volatile substance, or aerosol/particulate, determination of subchronic inhalation toxicity may be carried out after initial information on toxicity has been obtained by acute testing. The subchronic inhalation study has been designed to permit the determination of the no-observed-effect level and toxic effects associated with continuous or repeated exposure to a test substance for a period of 90 days. The test is not capable of determining those effects that have a long latency period for development (e.g., carcinogenicity and life shortening). It provides information on health hazards likely to arise from repeated exposures by the inhalation route over a limited period of time. It will provide information on target organs, the possibilities of accumulation, and can be of use in selecting dose levels for chronic studies and for establishing safety criteria for human exposure. Hazards of inhaled substances are influenced by the inherent toxicity and by physical factors such as volatility and particle size.

(b) *Definitions.* (1) Subchronic inhalation toxicity is the adverse effects occurring as a result of the repeated daily exposure of experimental animals to a chemical by inhalation for part (approximately 10 percent) of a life span.

(2) Aerodynamic diameter applies to the size of particles of aerosols. It is the diameter of a sphere of unit density which behaves aerodynamically as the particle of the test substance. It is used to compare particles of different size and densities and to predict where in the respiratory tract such particles may be deposited. This term is used in contrast to measured or geometric diameter which is representative of actual diameters which in themselves cannot be related to deposition within the respiratory tract.

(3) The geometric mean diameter or the median diameter is the calculated

aerodynamic diameter which divides the particles of an aerosol in half based on the weight of the particles. Fifty percent of the particles by weight will be larger than the median diameter and 50 percent of the particles will be smaller than the median diameter. The median diameter describes the particle size distribution of any aerosol based on the weight and size of the particles.

(4) Inhalable diameter refers to that aerodynamic diameter of a particle which is considered to be inhalable for the organism. It is used to refer to particles which are capable of being inhaled and may be deposited anywhere within the respiratory tract from the trachea to the alveoli. For man, inhalable diameter is considered as 15 micrometers or less.

(5) Dose refers to an exposure level. Exposure is expressed as weight or volume of test substance per volume of air (mg/l), or as parts per million (ppm).

(6) No-effect level/No-toxic-effect level/No-adverse-effect level/No-observed-effect level is the maximum dose used in a test which produces no observed adverse effects. A no-observed-effect level is expressed in terms of weight or volume of test substance given daily per unit volume of air (mg/l or ppm).

(7) Cumulative toxicity is the adverse effects of repeated doses occuring as a result of prolonged action on, or increased concentration of the administered test substance or its metabolites in susceptible tissues.

(c) *Principle of the test method.* Several groups of experimental animals are exposed daily for a defined period to the test substance in graduated concentrations, one concentration being used per group, for a period of 90 days. During the period of administration, the animals are observed daily to detect signs of toxicity. Animals which die during the test are necropsied and at the conclusion of the test, surviving animals are sacrificed and necropsied and appropriate histopathological examinations carried out.

(d) *Test procedures*—(1) *Animal selection*—(i) *Species and strain.* A mammalian species shall be used for testing. A variety of rodent species may be used, although the rat is the preferred species. Commonly used laboratory strains shall be employed. If another mammalian species is used, the tester shall provide justification/ reasoning for its selection.

(ii) *Age.* Young adult animals shall be used. At the commencement of the study the weight variation of animals shall not exceed ±20 percent of the mean weight for each sex.

(iii) *Sex.* (A) Equal numbers of animals of each sex shall be used at each dose level.

(B) Females shall be nulliparous and nonpregnant.

(iv) *Numbers.* (A) At least 20 rodents (10 females and 10 males) shall be used for each test group. If another mammalian species is selected (e.g. dog, rabbit, or non-human primate), at least 8 animals (4 males and 4 females) shall be used.

(B) If interim sacrifices are planned, the number of animals shall be increased by the number of animals scheduled to be sacrificed before the completion of the study.

(2) *Control groups.* A concurrent control group is required. This group shall be an untreated or sham-treated control group. Except for treatment with the test substance, animals in the control group shall be handled in a manner identical to the test group animals. Where a vehicle is used to help generate an appropriate concentration of the substance in the atmosphere, a vehicle control group shall be used. If the toxic properties of the vehicle are not known or cannot be made available, both untreated and vehicle control groups are required.

(3) *Satellite group.* A satellite group of 20 animals (10 animals per sex) may be treated with the high concentration level for 90 days and observed for reversibility, persistence, or delayed occurrence of toxic effects for a post-treatment period of appropriate length, normally not less than 28 days.

(4) *Dose levels and dose selection.* (i) In subchronic toxicity tests, it is desirable to have a concentration-response relationship as well as a no-observed-toxic-effect level. Therefore, at least 3 concentration levels with a control and, where appropriate, a vehicle control (corresponding to the concentration of vehicle at the highest exposure level) shall be used. Concentrations

should be spaced appropriately to produce test groups with a range of toxic effects. The data should be sufficient to produce a concentration-response curve.

(ii) The highest concentration should result in toxic effects but not produce an incidence of fatalities which would prevent a meaningful evaluation.

(iii) The lowest concentration should not produce any evidence of toxicity. Where there is a usable estimation of human exposure the lowest concentration should exceed this.

(iv) Ideally, the intermediate concentration level(s) should produce minimal observable toxic effects. If more than one intermediate concentration level is used, the concentrations should be spaced to produce a gradation of toxic effects.

(v) In the low and intermediate groups and in the controls the incidence of fatalities should be low, to permit a meaningful evaluation of the results.

(vi) In the case of potentially explosive test substances, care should be taken to avoid generating explosive concentrations.

(5) *Exposure conditions.* The animals should be exposed to the test substance, ideally for 6 hours per day on a 7-day per week basis, for a period of 90 days. However, based primarily on practical considerations, exposure on a 5-day-per-week basis for 6 hours per day is the minimum acceptable exposure period.

(6) *Observation period.* (i) Duration of observation shall be for at least 90 days.

(ii) Animals in a satellite group scheduled for followup observations should be kept for at least 28 days further without treatment to detect recovery from, or persistence of, toxic effects.

(7) *Inhalation exposure.* (i) The animals shall be tested in inhalation equipment designed to sustain a minimum dynamic air flow of 12 to 15 air changes per hour and ensure an adequate oxygen content of 19 percent and an evenly distributed exposure atmosphere. Where a chamber is used, its design should minimize crowding of the test animals and maximize their exposure to the test substance. This is best accomplished by individual caging. To ensure stability of a chamber atmosphere, the total ''volume'' of the test animals shall not exceed 5 percent of the volume of the test chamber. Oronasal or head-only exposure may be used if it is desirable to avoid concurrent exposure by the dermal or oral routes.

(ii) A dynamic inhalation system with a suitable flow control system shall be used. The rate of air flow shall be adjusted to ensure that conditions throughout the exposure chamber are essentially the same. Maintenance of slight negative pressure inside the chamber will prevent leakage of the test substance into surrounding areas.

(iii) The temperature at which the test is performed should be maintained at 22 °C (±2°). Ideally, the relative humidity should be maintained between 40 to 60 percent, but in certain instances (e.g., tests of aerosols, use of water vehicle) this may not be practicable.

(8) *Physical measurements.* Measurements or monitoring shall be made of the following:

(i) The rate of air flow shall be monitored continuously and recorded at least every 30 minutes.

(ii) The actual concentrations of the test substance shall be measured in the breathing zone. During the exposure period the actual concentrations of the test substance shall be held as constant as practicable, monitored continuously or intermittently depending on the method of analysis, and recorded at least at the beginning, at an intermediate time, and at the end of the exposure period.

(iii) During the development of the generating system, particle size analysis shall be performed to establish the stability of aerosol concentrations with respect to particle size. During exposure, analysis shall be conducted as often as necessary to determine the consistency of particle size distribution.

(iv) Temperature and humidity shall be monitored continuously but shall be recorded at least every 30 minutes.

(9) *Feed and water during exposure period.* Feed shall be withheld during exposure. Water may also be withheld during exposure.

(10) *Observation of animals.* (i) Each animal shall be observed daily and, if necessary, handled to appraise its physical condition.

(ii) Additional observations should be made daily with appropriate actions taken to minimize loss of animals to the study (e.g., necropsy or refrigeration of those animals found dead and isolation or sacrifice of weak or moribund animals).

(iii) Signs of toxicity shall be recorded as they are observed including the time of onset, the degree, and duration.

(iv) Cage-side observations should include, but not be limited to, changes in the skin and fur, eyes and mucous membranes, respiratory, circulatory, autonomic and central nervous systems, somatomotor activity and behavior pattern.

(v) Animals shall be weighed weekly. Feed consumption shall also be determined weekly if abnormal body weight changes are observed.

(vi) At the end of the study period all survivors in the nonsatellite treatment groups shall be sacrificed. Moribund animals shall be removed and sacrificed when noticed.

(11) *Clinical examinations.* (i) The following examinations shall be made on all animals of each sex in each group:

(A) Certain hematology determinations shall be carried out at least two times during the test period on all groups of animals including concurrent controls: After 30 days of test and just prior to terminal sacrifice at the end of the test period. Hematology determinations which are appropriate to all studies: Hematocrit, hemoglobin concentration, erythrocyte count, total and differential leukocyte count, and a measure of clotting potential such as clotting time, prothrombin time, thromboplastin time, or platelet count.

(B) Certain clinical biochemistry determinations on blood should be carried out at least two times during the test period on all groups of animals including concurrent controls: After 30 days of test and just prior to terminal sacrifice at the end of the test period. Clinical biochemistry test areas which are considered appropriate to all studies: Electrolyte balance, carbohydrate metabolism, and liver and kidney function. The selection of specific tests will be influenced by observations on the mode of action of the substance. Suggested determinations: calcium, phosphorus, chloride, sodium, potassium, fasting glucose (with period of fasting appropriate to the species), serum glutamic-pyruvic transaminase, (now known as serum alanine aminotransferase), serum glutamic-oxaloacetic transaminase (now known as serum aspartate aminotransferase), ornithine decarboxylase, gamma glutamyl transpeptidase, urea nitrogen, albumen, blood creatinine, total bilirubin, and total serum protein measurements. Other determinations which may be necessary for an adequate toxicological evaluation include: Analyses of lipids, hormones, acid/base balance, methemoglobin, and cholinesterase activity. Additional clinical biochemistry may be employed, where necessary, to extend the investigation of observed effects.

(ii) The following examinations shall be made on high dose and control groups. If changes in the eyes are detected, all animals shall be examined:

(A) Ophthalmological examination, using an ophthalmoscope or equivalent suitable equipment, shall be made prior to exposure to the test substance and at the termination of the study.

(B) Urinalysis is not recommended on a routine basis, but only when there is an indication based on expected and/or observed toxicity.

(12) *Gross pathology*. (i) All animals shall be subjected to a full gross necropsy which includes examination of the external surface of the body, all orifices and the cranial, thoracic, and abdominal cavities and their contents.

(ii) At least the liver, kidneys, adrenals, brain, and gonads shall be weighed wet, as soon as possible after dissection to avoid drying. In addition, for the rodent, the brain; for the nonrodent, the thyroid with parathyroids also shall be weighed wet.

(iii) The following organs and tissues, or representative samples thereof, shall be preserved in a suitable medium for possible future histopathological examination: All gross lesions; lungs—which should be removed intact, weighed, and treated with a suitable fixative to ensure that lung structure is maintained

(perfusion with the fixative is considered to be an effective procedure); nasopharyngeal tissues; brain—including sections of medulla/pons cerebellar cortex and cerebral cortex; pituitary; thyroid/parathyroid; thymus; trachea; heart; sternum with bone marrow; salivary glands; liver; spleen; kidneys; adrenals; pancreas; gonads; uterus; accessory genital organs (epididymis, prostate, and, if present, seminal vesicles); aorta; (skin); gall bladder (if present); esophagus; stomach; duodenum; jejunum; ileum; cecum; colon; rectum; urinary bladder; representative lymph node; (mammary gland); (thigh musculature); peripheral nerve; (eyes); (femur—including articular surface); (spinal cord at three levels—cervical, midthoracic, and lumbar); and (zymbal and exorbital lachrymal glands).

(13) *Histopathology*. The following histopathology shall be performed:

(i) Full histopathology on the respiratory tract and other organs and tissues, listed above, of all animals in the control and high dose groups.

(ii) All gross lesions in all animals.

(iii) Target organs in all animals.

(iv) The tissues mentioned in brackets (listed above) if indicated by signs of toxicity or target organ involvement.

(v) Lungs of animals (rodents) in the low and intermediate dose groups shall also be subjected to histopathological examination, primarily for evidence of infection since this provides a convenient assessment of the state of health of the animals.

(vi) When a satellite group is used, histopathology shall be performed on tissues and organs identified as showing effects in the treated groups.

(e) *Data and reporting*—(1) *Treatment of results*. (i) Data shall be summarized in tabular form, showing for each test group the number of animals at the start of the test, the number of animals showing lesions, the types of lesions, and the percentage of animals displaying each type of lesion.

(ii) All observed results, quantitative and incidental, should be evaluated by an appropriate statistical method. Any generally accepted statistical method may be used; the statistical methods should be selected during the design of the study.

(2) *Evaluation of results*. The findings of the subchronic inhalation toxicity study should be evaluated in conjunction with the findings of preceding studies and considered in terms of the observed toxic effects and the necropsy and histopathological findings. The evaluation will include the relationship between the concentration of the test substance and duration of exposure, and the presence or absence, the incidence and severity, of abnormalities, including behavioral and clinical abnormalities, gross lesions, identified target organs, body weight changes, effects on mortality and any other general or specific toxic effects. A properly conducted subchronic test should provide a satisfactory estimation of a no-effect level.

(3) *Test report*. In addition to the reporting requirements as specified under EPA Good Laboratory Practice Standards, 40 CFR part 792, subpart J, the following specific information shall be reported:

(i) *Test conditions*. (A) Description of exposure apparatus, including design, type, dimensions, source of air, system for generating particulates and aerosols, method of conditioning air, treatment of exhaust air, and the method of housing animals in a test chamber.

(B) The equipment for measuring temperature, humidity, and particulate aerosol concentrations and size shall be described.

(ii) *Exposure data*. These shall be tabulated and presented with mean values and measure of variability (e.g., standard deviation) and shall include:

(A) Airflow rates through the inhalation equipment.

(B) Temperature and humidity of air.

(C) Nominal concentration (total amount of test substance fed into the inhalation equipment divided by volume of air).

(D) Actual concentration in test breathing zone.

(E) Particle size distribution (e.g., median aerodynamic diameter of particles with standard deviation from the mean).

(iii) *Group animal data.* Tabulation of toxic response data by species, strain, sex, and exposure level for:

(A) Number of animals dying.

(B) Number of animals showing signs of toxicity.

(C) Number of animals exposed.

(iv) *Individual animal data.* (A) Date of death during the study or whether animals survived to termination.

(B) Date of observation of each abnormal sign and its subsequent course.

(C) Body weight data.

(D) Feed consumption data when collected.

(E) Hematological tests employed and all results.

(F) Clinical biochemistry tests employed and all results.

(G) Necropsy findings.

(H) Detailed description of all histopathological findings.

(I) Statistical treatment of results where appropriate.

(f) *References.* For additional background information on this test guideline the following references should be consulted:

(1) Cage, J.C. ''Experimental Inhalation Toxicology,'' *Methods in Toxicology*. Ed. G.E. Paget. (Philadelphia: F.A. Davis Co. 1970, pp. 258–277.

(2) Casarett, L.J., Doull, J. ''Chapter 9.'' *Toxicology: The Basic Science of Poisons* (New York: Macmillan Publishing Co. Inc. 1975).

(3) MacFarland, H.N. ''Respiratory Toxicology,'' *Essays in Toxicology*. Ed. W.J. Hayes. Vol. 7 (New York: Academic Press, 1976) pp. 121–154.

(4) National Academy of Sciences. ''Principles and Procedures for Evaluating the Toxicity of Household Substances,'' a report prepared by the Committee for the Revision of NAS Publication 1138, under the auspices of the Committee on Toxicology, National Research Council, National Academy of Sciences, Washington, DC (1977).

(5) World Health Organization. ''Part I. Environmental Health Criteria 6,'' *Principles and Methods for Evaluating the Toxicity of Chemicals.* (Geneva: World Health Organization, 1978).

[50 FR 39397, Sept. 27, 1985, as amended at 52 FR 19073, May 20, 1987; 52 FR 26150, July 13, 1987; 53 FR 49150, Dec. 6, 1988; 54 FR 21064, May 16, 1989]

§ 798.2650 Oral toxicity.

(a) *Purpose.* In the assessment and evaluation of the toxic characteristics of a chemical, the determination of subchronic oral toxicity may be carried out after initial information on toxicity has been obtained by acute testing. The subchronic oral study has been designed to permit the determination of the no-observed-effect level and toxic effects associated with continuous or repeated exposure to a test substance for a period of 90 days. The test is not capable of determining those effects that have a long latency period for development (e.g., carcinogenicity and life shortening). It provides information on health hazards likely to arise from repeated exposure by the oral route over a limited period of time. It will provide information on target organs, the possibilities of accumulation, and can be of use in selecting dose levels for chronic studies and for establishing safety criteria for human exposure.

(b) *Definitions.* (1) Subchronic oral toxicity is the adverse effects occurring as a result of the repeated daily exposure of experimental animals to a chemical by the oral route for a part (approximately 10 percent) of a life span.

(2) Dose is the amount of test substance administered. Dose is expressed as weight of test substance (g, mg) per unit weight of test animal (e.g., mg/kg), or as weight of test substance per unit weight of food or drinking water.

(3) No-effect level/No-toxic-effect level/No-adverse-effect level/No-observed-effect level is the maximum dose used in a test which produces no observed adverse effects. A no-observed-effect level is expressed in terms of the weight of a substance given daily per unit weight of test animal (mg/kg). When administered to animals in food or drinking water the no-observed-effect level is expressed as mg/kg of food or mg/ml of water.

(4) Cumulative toxicity is the adverse effects of repeated doses occurring as a result of prolonged action on, or increased concentration of, the administered test substance or its metabolites in susceptible tissue.

(c) *Principle of the test method.* The test substance is administered orally in graduated daily doses to several groups of experimental animals, one dose level per group, for a period of 90 days. During the period of administration the animals are observed daily to detect

signs of toxicity. Animals which die during the period of administration are necropsied. At the conclusion of the test all animals are necropsied and histo-pathological examinations carried out.

(d) *Limit test.* If a test at one dose level of at least 1,000 mg/kg body weight (expected human exposure may indicate the need for a higher dose level), using the procedures described for this study, produces no observable toxic effects and if toxicity would not be expected based upon data of structurally related compounds, then a full study using three dose levels might not be necessary.

(e) *Test procedures*—(1) *Animal selection*—(i) *Species and strain.* A mammalian species shall be used for testing. A variety of rodent species may be used, although the rat is the preferred species. Commonly used laboratory strains shall be employed. The commonly used nonrodent species is the dog, preferably of a defined breed; the beagle is frequently used. If other mammalian species are used, the tester shall provide justification/reasoning for his or her selection.

(ii) *Age*—(A) *General.* Young adult animals shall be employed. At the commencement of the study the weight variation of animals used shall not exceed ± 20 percent of the mean weight for each sex.

(B) *Rodents.* Dosing shall begin as soon as possible after weaning, ideally before the rats are 6, and in any case, not more than 8 weeks old.

(C) *Non-rodent.* In the case of the dog, dosing shall commence after acclimatization, preferably at 4 to 6 months and not later than 9 months of age.

(iii) *Sex.* (A) Equal numbers of animals of each sex shall be used at each dose level.

(B) The females shall be nulliparous and nonpregnant.

(iv) *Numbers*—(A) *Rodents.* At least 20 animals (10 females and 10 males) shall be used at each dose level.

(B) *Non-rodents.* At least eight animals (four females and four males) shall be used at each dose level.

(C) If interim sacrifices are planned, the number shall be increased by the number of animals scheduled to be sacrificed before the completion of the study.

(2) *Control groups.* A concurrent control group is required. This group shall be an untreated or sham-treated control group or, if a vehicle is used in administering the test substance, a vehicle control group. If the toxic properties of the vehicle are not known or cannot be made available, both untreated and vehicle control groups are required.

(3) *Satellite group.* (Rodent) A satellite group of 20 animals (10 animals per sex) may be treated with the high dose level for 90 days and observed for reversibility, persistence, or delayed occurrence of toxic effects for a post-treatment period of appropriate length, normally not less than 28 days.

(4) *Dose levels and dose selection.* (i) In subchronic toxicity tests, it is desirable to have a dose response relationship as well as a no-observed-toxic-effect level. Therefore, at least 3 dose levels with a control and, where appropriate, a vehicle control (corresponding to the concentration of vehicle at the highest exposure level) shall be used. Doses should be spaced appropriately to produce test groups with a range of toxic effects. The data should be sufficient to produce a dose-response curve.

(ii) The highest dose level in rodents should result in toxic effects but not produce an incidence of fatalities which would prevent a meaningful evaluation; for non-rodents there should be no fatalities.

(iii) The lowest dose level should not produce any evidence of toxicity. Where there is a usable estimation of human exposure the lowest dose level should exceed this.

(iv) Ideally, the intermediate dose level(s) should produce minimal observable toxic effects. If more than one intermediate dose is used, the dose levels should be spaced to produce a gradation of toxic effects.

(v) For rodents, the incidence of fatalities in low and intermediate dose groups and in the controls should be low, to permit a meaningful evaluation of the results; for non-rodents, there should be no fatalities.

(5) *Exposure conditions.* The animals are dosed with the test substance ideally on a 7-day per week basis over a period of 90 days. However, based primarily on practical considerations, dosing in gavage or capsule studies on a 5-day per week basis is considered to be acceptable.

(6) *Observation period.* (i) Duration of observation shall be for at least 90 days.

(ii) Animals in the satellite group scheduled for followup observations should be kept for at least 28 days further without treatment to detect recovery from, or persistence of, toxic effects.

(7) *Administration of the test substance.* (i) The test substance may be administered in the diet or in capsules. In addition, for rodents it may also be administered by gavage or in the drinking water.

(ii) All animals shall be dosed by the same method during the entire experimental period.

(iii) Where necessary, the test substance is dissolved or suspended in a suitable vehicle. If a vehicle or diluent is needed, ideally it should not elicit important toxic effects itself nor substantially alter the chemical or toxicological properties of the test substance. It is recommended that wherever possible the usage of an aqueous solution be considered first, followed by consideration of a solution of oil and then by possible solution in other vehicles.

(iv) For substances of low toxicity, it is important to ensure that when administered in the diet the quantities of the test substance involved do not interfere with normal nutrition. When the test substance is administered in the diet either a constant dietary concentration (ppm) or a constant dose level in terms of the animals' body weight shall be used; the alternative used shall be specified.

(v) For a substance administered by gavage or capsule, the dose shall be given at approximately the same time each day, and adjusted at intervals (weekly or bi-weekly) to maintain a constant dose level in terms of animal body weight.

(8) *Observation of animals.* (i) Each animal shall be observed daily and, if necessary, handled to appraise its physical condition.

(ii) Additional observations shall be made daily with appropriate actions taken to minimize loss of animals to the study (e.g., necropsy or refrigeration of those animals found dead and isolation or sacrifice of weak or moribund animals).

(iii) Signs of toxicity shall be recorded as they are observed including the time of onset, degree and duration.

(iv) Cage-side observations shall include, but not be limited to, changes in skin and fur, eyes and mucous membranes, respiratory, circulatory, autonomic and central nervous systems, somatomotor activity and behavior pattern.

(v) Measurements shall be made weekly of feed consumption or water consumption when the test substance is administered in the feed or drinking water, respectively.

(vi) Animals shall be weighed weekly.

(vii) At the end of the 90-day period all survivors in the nonsatellite treatment groups shall be sacrificed. Moribund animals shall be removed and sacrificed when noticed.

(9) *Clinical examinations.* (i) The following examinations shall be made on all animals of each sex in each group for rodents and all animals when nonrodents are used as test animals.

(A) Certain hematology determinations shall be carried out at least two times during the test period on all groups of animals including concurrent controls: After 30 days of test and just prior to terminal sacrifice at the end of the test period. Hematology determinations which are appropriate to all studies: Hematocrit, hemoglobin concentration, erythrocyte count, total and differential leukocyte count, and a measure of clotting potential such as clotting time, prothrombin time, thromboplastin time, or platelet count.

(B) Certain clinical biochemistry determinations on blood should be carried out at least two times during the test period on all groups of animals including concurrent controls: After 30 days of test and just prior to terminal sacrifice at the end of the test period. Clinical biochemistry test areas which are considered appropriate to all studies: Electrolyte balance, carbohydrate

metabolism, and liver and kidney function. The selection of specific tests will be influenced by observations on the mode of action of the substance. Suggested determinations: Calcium, phosphorus, chloride, sodium, potassium, fasting glucose (with period of fasting appropriate to the species), serum glutamic-pyruvic transaminase (now known as serum alanine aminotransferase), serum glutamic oxaloacetic transaminase (now known as serum aspartate aminotransferase), ornithine decarboxylase, gamma glutamyl transpeptidase, urea nitrogen, albumen, blood creatinine, total bilirubin, and total serum protein measurements. Other determinations which may be necessary for an adequate toxicological evaluation include: Analyses of lipids, hormones, acid/base balance, methemoglobin, and cholinesterase activity. Additional clinical biochemistry may be employed, where necessary, to extend the investigation of observed effects.

(ii) The following examinations shall be made on high dose and control groups. If changes in the eyes are detected, all animals should be examined.

(A) Ophthalmological examination, using an ophthalmoscope or equivalent suitable equipment, shall be made prior to the administration of the test substance and at the termination of the study.

(B) Urinalysis is not recommended on a routine basis, but only when there is an indication based on expected and or observed toxicity.

(10) *Gross necropsy*. (i) All animals shall be subjected to a full gross necropsy which includes examination of the external surface of the body, all orifices, and the cranial, thoracic and abdominal cavities and their contents.

(ii) At least the liver, kidneys, adrenals, and gonads shall be weighed wet, as soon as possible after dissection to avoid drying. In addition, for the rodent, the brain; for the non-rodent, the thyroid with parathyroids also shall be weighed wet.

(iii) The following organs and tissues, or representative samples thereof, shall be preserved in a suitable medium for possible future histopathological examination: All gross lesions; lungs—which should be removed intact, weighed, and treated with a suitable fixative to ensure that lung structure is maintained (perfusion with the fixative is considered to be an effective procedure); nasopharyngeal tissues; brain— including sections of medulla/pons, cerebellar cortex, and cerebral cortex; pituitary; thyroid/parathyroid; thymus; trachea; heart; sternum with bone marrow; salivary glands; liver; spleen; kidneys; adrenals; pancreas; gonads; uterus; accessory genital organs (epididymis, prostate, and, if present, seminal vesicles); aorta; (skin); gall bladder (if present); esophagus; stomach; duodenum; jejunum; ileum; cecum; colon; rectum; urinary bladder; representative lymph node; (mammary gland); (thigh musculature); peripheral nerve; (eyes); (femur—including articular surface); (spinal cord at three levels—cervical, midthoracic, and lumbar); and (zymbal and exorbital lachrymal glands); and (rodent–zymbal glands).

(11) *Histopathology*. The following histopathology shall be performed:

(i) Full histopathology on the organs and tissues, listed above, of all rodents in the control and high dose groups, all non-rodents, and all rodents that died or were killed during the study.

(ii) All gross lesions in all animals.

(iii) Target organs in all animals.

(iv) The tissues mentioned in brackets (listed above) if indicated by signs of toxicity of target organ involvement.

(v) Lungs, liver and kidneys of all animals. Special attention to examination of the lungs of rodents shall be made for evidence of infection since this provides a convenient assessment of the state of health of the animals.

(vi) When a satellite group is used (rodents), histopathology shall be performed on tissues and organs identified as showing effects in the treated groups.

(f) *Data and reporting*—(1) *Treatment of results.* (i) Data shall be summarized in tabular form, showing for each test group the number of animals at the start of the test, the number of animals showing lesions, the types of lesions and the percentage of animals displaying each type of lesion.

(ii) All observed results, quantitative and incidental, should be evaluated by an appropriate statistical method. Any

generally accepted statistical methods may be used; the statistical methods should be selected during the design of the study.

(2) *Evaluation of the study results.* (i) The findings of a subchronic oral toxicity study should be evaluated in conjunction with the findings of preceding studies and considered in terms of the toxic effects and the necropsy and histopathological findings. The evaluation will include the relationship between the dose of the test substance and the presence or absence, the incidence and severity, of abnormalities, including behavioral and clinical abnormalities, gross lesions, identified target organs, body weight changes, effects on mortality and any other general or specific toxic effects. A properly conducted subchronic test should provide a satisfactory estimation of a no-effect level.

(ii) In any study which demonstrates an absence of toxic effects, further investigation to establish absorption and bioavailability of the test substance should be considered.

(3) *Test report.* In addition to the reporting requirements as specified under EPA Good Laboratory Practice Standards, 40 CFR part 792, subpart J, the following specific information shall be reported:

(i) *Group animal data.* Tabulation of toxic response data by species, strain, sex and exposure level for:

(A) Number of animals dying.

(B) Number of animals showing signs of toxicity.

(C) Number of animals exposed.

(ii) *Individual animal data.* (A) Date of death during the study or whether animals survived to termination.

(B) Date of observation of each abnormal sign and its subsequent course.

(C) Body weight data.

(D) Feed consumption data when collected.

(E) Hematological tests employed and all results.

(F) Clinical biochemistry tests employed and all results.

(G) Necropsy findings.

(H) Detailed description of all histopathological findings.

(I) Statistical treatment of results where appropriate.

(g) *References.* For additional background information on this test guideline the following references should be consulted:

(1) Boyd, E.M. ''Chapter 14—Pilot Studies, 15—Uniposal Clinical Parameters, 16—Uniposal Autopsy Parameters.'' *Predictive Toxicometrics.* (Baltimore: Williams and Wilkins, 1972).

(2) Fitzhugh, O.G. ''Subacute Toxicity,'' *Appraisal of the Safety of Chemicals in Foods, Drugs and Cosmetics.* The Association of Food and Drug Officials of the United States (1959, 3rd Printing 1975) pp. 26–35.

(3) Food Safety Council. ''Subchronic Toxicity Studies,'' *Proposed System for Food Safety Assessment.* (Columbia: Food Safety Council, 1978) pp. 83–96.

(4) National Academy of Sciences. ''Principles and Procedures for Evaluating the Toxicity of Household Substances,'' a report prepared by the Committee for the Revision of NAS Publication 1138, under the auspices of the Committee on Toxicology, National Research Council, National Academy of Sciences, Washington, DC (1977).

(5) World Health Organization. ''Part I. Environmental Health Criteria 6,'' *Principles and Methods for Evaluating the Toxicity of Chemicals.* (Geneva: World Health Organization, 1978).

[50 FR 39397, Sept. 27, 1985, as amended at 52 FR 19074, May 20, 1987; 53 FR 49150, Dec. 6, 1988; 54 FR 21064, May 16, 1989]

Subpart D—Chronic Exposure

§ 798.3260 Chronic toxicity.

(a) *Purpose.* The objective of a chronic toxicity study is to determine the effects of a substance in a mammalian species following prolonged and repeated exposure. Under the conditions of the chronic toxicity test, effects which require a long latency period or which are cumulative should become manifest. The application of this guideline should generate data on which to identify the majority of chronic effects and shall serve to define long term dose-response relationships. The design and conduct of chronic toxicity tests should allow for the detection of general toxic effects, including neurological, physiological, biochemical, and hematological effects and exposure-related morphological (pathology) effects.

(b) *Test procedures*—(1) *Animal selection*—(i) *Species and strain.* Testing should be performed with two mammalian species, one a rodent and another

a non-rodent. The rat is the preferred rodent species and the dog is the preferred non-rodent species. Commonly used laboratory strains should be employed. If other mammalian species are used, the tester should provide justification/reasoning for their selection.

(ii) *Age.* (A) Dosing of rats should begin as soon as possible after weaning, ideally before the rats are 6, but in no case more than 8 weeks old.

(B) Dosing of dogs should begin between 4 and 6 months of age and in no case later than 9 months of age.

(C) At commencement of the study the weight variation of animals used should not exceed ±20 percent of the mean weight for each sex.

(iii) *Sex.* (A) Equal numbers of animals of each sex should be used at each dose level.

(B) The females should be nulliparous and non-pregnant.

(iv) *Numbers.* (A) For rodents, at least 40 animals (20 females and 20 males) and for non-rodents (dogs) at least 8 animals (4 females and 4 males) should be used at each dose level.

(B) If interim sacrifices are planned, the number should be increased by the number of animals scheduled to be sacrificed during the course of the study.

(C) The number of animals at the termination of the study must be adequate for a meaningful and valid statistical evaluation of chronic effects.

(2) *Control groups.* (i) A concurrent control group is suggested. This group should be an untreated or sham treated control group or, if a vehicle is used in administering the test substance, a vehicle control group. If the toxic properties of the vehicle are not known or cannot be made available, both untreated and vehicle control groups are strongly suggested.

(ii) In special circumstances such as in inhalation studies involving aerosols or the use of an emulsifier of uncharacterized biological activity in oral studies, a concurrent negative control group should be utilized. The negative control group should be treated in the same manner as all other test animals except that this control group should not be exposed to either the test substance or any vehicle.

(3) *Dose levels and dose selections.* (i) In chronic toxicity tests, it is necessary to have a dose-response relationship as well as a no-observed-toxic-effect level. Therefore, at least three dose levels should be used in addition to the concurrent control group. Dose levels should be spaced to produce a gradation of effects.

(ii) The high dose level in rodents should elicit some signs of toxicity without causing excessive lethality; for non-rodents, there should be signs of toxicity but there should be no fatalities.

(iii) The lowest dose level should not produce any evidence of toxicity. Where there is a usable estimation of human exposure the lowest dose level should exceed this even though this dose level may result in some signs of toxicity.

(iv) Ideally, the intermediate dose level(s) should produce minimal observable toxic effects. If more than one intermediate dose is used, the dose level should be spaced to produce a gradation of toxic effects.

(v) For rodents, the incidence of fatalities in low and intermediate dose groups and in the controls should be low to permit a meaningful evaluation of the results. For non-rodents, there should be no fatalities.

(4) *Exposure conditions.* The animals are dosed with the test substance ideally on a 7-day per week basis over a period of at least 12 months. However, based primarily on practical considerations, dosing on a 5-day per week basis is considered to be acceptable.

(5) *Observation period.* Duration of observation should be for at least 12 months, and may be concurrent with or subsequent to dosing. If there is a post-exposure observation period, an interim sacrifice should be performed on no fewer than half of the animals of each sex at each dose level immediately upon termination of exposure.

(6) *Administration of the test substance.* The three main routes of administration are oral, dermal, and inhalation. The choice of the route of administration depends upon the physical and chemical characteristics of the test substance and the form typifying exposure in humans.

(i) *Oral studies.* (A) The animals should receive the test substance in their diet, dissolved in drinking water,

or given by gavage or capsule for a period of at least 12 months.

(B) If the test substance is administered in the drinking water, or mixed in the diet, exposure is continuous.

(C) For a diet mixture, the highest concentration should not exceed 5 percent.

(ii) *Dermal studies.* (A) The animals are treated by topical application with the test substance, ideally for at least 6 hours per day.

(B) Fur should be clipped from the dorsal area of the trunk of the test animals. Care must be taken to avoid abrading the skin which could alter its permeability.

(C) The test substance should be applied uniformly over a shaved area which is approximately 10 percent of the total body surface area. With highly toxic substances, the surface area covered may be less, but as much of the area should be covered with as thin and uniform a film as possible.

(D) During the exposure period, the test substance may be held if necessary, in contact with the skin with a porous gauze dressing and non-irritating tape. The test site should be further covered in a suitable manner to retain the gauze dressing and test substance and ensure that the animals cannot ingest the test substance.

(iii) *Inhalation studies.* (A) The animals should be tested with inhalation equipment designed to sustain a dynamic air flow of 12 to 15 air changes per hour, ensure an adequate oxygen content of 19 percent and an evenly distributed exposure atmosphere. Where a chamber is used, its design should minimize crowding of the test animals and maximize their exposure to the test substance. This is best accomplished by individual caging. As a general rule to ensure stability of a chamber atmosphere, the total ''volume'' of the test animals should not exceed 5 percent of the volume of the test chamber. Alternatively, oro-nasal, head-only or whole body individual chamber exposure may be used.

(B) The temperature at which the test is performed should be maintained at 22 °C (±2°). Ideally, the relative humidity should be maintained between 40 to 60 percent, but in certain instances (e.g., tests of aerosols, use of water vehicle) this may not be practicable.

(C) Feed and water should be withheld during each daily 6 hour exposure period.

(D) A dynamic inhalation system with a suitable analytical concentration control system should be used. The rate of air flow should be adjusted to ensure that conditions throughout the equipment are essentially the same. Maintenance of slight negative pressure inside the chamber will prevent leakage of the test substance into the surrounding areas.

(7) *Observation of animals.* (i) Each animal should be handled and its physical condition appraised at least once each day.

(ii) Additional observations should be made daily with appropriate actions taken to minimize loss of animals to the study (e.g., necropsy or refrigeration of those animals found dead and isolation or sacrific of weak or moribund animals).

(iii) Clinical signs of toxicity including suspected tumors and mortality should be recorded as they are observed, including the time of onset, the degree and duration.

(iv) Cage-side observations should include, but not be limited to, changes in skin and fur, eyes and mucous membranes, respiratory, circulatory, autonomic and central nervous systems, somatomotor activity and behavior pattern.

(v) Body weights should be recorded individually for all animals once a week during the first 13 weeks of the test period and at least once every 4 weeks thereafter unless signs of clinical toxicity suggest more frequent weighings to facilitate monitoring of health status.

(vi) When the test substance is administered in the feed or drinking water, measurements of feed or water consumption, respectively, should be determined weekly during the first 13 weeks of the study and then at approximately monthly intervals unless health status or body weight changes dictate otherwise.

(vii) At the end of the study period all survivors should be sacrificed. Moribund animals should be removed and sacrificed when noticed.

(8) *Physical measurements.* For inhalation studies, measurements or monitoring should be made of the following:

(i) The rate of air flow should be monitored continuously, but should be recorded at intervals of at least once every 30 minutes.

(ii) During each exposure period the actual concentrations of the test substance should be held as constant as practicable, monitored continuously and measured at least three times during the test period: at the beginning, at an intermediate time and at the end of the period.

(iii) During the development of the generating system, particle size analysis should be performed to establish the stability of aerosol concentrations. During exposure, analysis should be conducted as often as necessary to determine the consistency of particle size distribution and homogeneity of the exposure stream.

(iv) Temperature and humidity should be monitored continuously, but should be recorded at intervals of at least once every 30 minutes.

(9) *Clinical examinations.* The following examinations should be made on at least 10 rats of each sex per dose and on all non-rodents.

(i) Certain hematology determinations (e.g., hemoglobin content, packed cell volume, total red blood cells, total white blood cells, platelets, or other measures of clotting potential) should be performed at termination and should be performed at 3 months, 6 months and at approximately 6 month intervals thereafter (for studies extending beyond 12 months) on blood samples collected from all non-rodents and from 10 rats per sex of all groups. These collections should be from the same animals at each interval. If clinical observations suggest a deterioration in health of the animals during the study, a differential blood count of the affected animals should be performed. A differential blood count should be performed on samples from those animals in the highest dosage group and the controls. Differential blood counts should be performed for the next lower group(s) if there is a major discrepancy between the highest group and the controls. If hematological effects were noted in the subchronic test, hematological testing should be performed at 3, 6, 12, 18, and 24 months for a two year study and at 3, 6, and 12 months for a 1-year study.

(ii) Certain clinical biochemistry determinations on blood should be carried out at least three times during the test period: just prior to initiation of dosing (base line data), near the middle and at the end of the test period. Blood samples should be drawn for clinical chemistry measurements from all non-rodents and at least ten rodents per sex of all groups; if possible, from the same rodents at each time interval. Test areas which are considered appropriate to all studies: electrolyte balance, carbohydrate metabolism and liver and kidney function. The selection of specific tests will be influenced by observations on the mode of action of the substance and signs of clinical toxicity. Suggested chemical determinations: calcium, phosphorus, chloride, sodium, potassium, fasting glucose (with period of fasting appropriate to the species), serum glutamic-pyruvic transaminase (now known as serum alanine aminotransferase), serum glutamic oxaloacetic transaminase (now known as serum aspartate aminotransferase), ornithine decarboxylase, gamma glutamyl transpeptidase, blood urea nitrogen, albumen, blood creatinine, creatinine phosphokinase, total cholesterol, total bilirubin and total serum protein measurements. Other determinations which may be necessary for an adequate toxicological evaluation include analyses of lipids, hormones, acid/base balance, methemoglobin and cholinesterase activity. Additional clinical biochemistry may be employed where necessary to extend the investigation of observed effects.

(iii) Urine samples from rodents at the same intervals as the hematological examinations under paragraph (b)(9)(i) of this section should be collected for analysis. The following determinations should be made from either individual animals or on a pooled sample/sex/group for rodents: appearance (volume and specific gravity), protein, glucose, ketones, bilirubin, occult blood (semi-quantitatively); and microscopy of sediment (semi-quantitatively).

(iv) Ophthalmological examination, using an ophthalmoscope or equivalent suitable equipment, should be made prior to the administration of the test substance and at the termination of the study. If changes in eyes are detected all animals should be examined.

(10) *Gross necropsy*. (i) A complete gross examination should be performed on all animals, including those which died during the experiment or were killed in moribund conditions.

(ii) The liver, kidneys, adrenals, brain and gonads should be weighed wet, as soon as possible after dissection to avoid drying. For these organs, at least 10 rodents per sex per group and all non-rodents should be weighed.

(iii) The following organs and tissues, or representative samples thereof, should be preserved in a suitable medium for possible future histopathological examination: All gross lesions and tumors; brain—including sections of medulla/pons, cerebellar cortex, and cerebral cortex; pituitary; thyroid/parathyroid; thymus; lungs; trachea; heart; sternum and/or femur with bone marrow; salivary glands; liver; spleen; kidneys; adrenals; esophagus; stomach; duodenum; jejunum; ileum; cecum; colon; rectum; urinary bladder; representative lymph nodes; pancreas; gonads; uterus; accessory genital organs (epididymis, prostate, and, if present, seminal vesicles; female mammary gland; aorta; gall bladder (if present); skin; musculature; peripheral nerve; spinal cord at three levels—cervical, midthoracic, and lumbar; and eyes. In inhalation studies, the entire respiratory tract, including nose, pharynx, larynx, and paranasal sinuses should be examined and preserved. In dermal studies, skin from sites of skin painting should be examined and preserved.

(iv) Inflation of lungs and urinary bladder with a fixative is the optimal method for preservation of these tissues. The proper inflation and fixation of the lungs in inhalation studies is considered essential for appropriate and valid histopathological examination.

(v) If other clinical examinations are carried out, the information obtained from these procedures should be available before microscopic examination, since they may provide significant guidance to the pathologist.

(11) *Histopathology*. (i) The following histopathology should be performed:

(A) Full histopathology on the organs and tissues, listed above, of all non-rodents, of all rodents in the control and high dose groups and of all rodents that died or were killed during the study.

(B) All gross lesions in all animals.

(C) Target organs in all animals.

(D) Lungs, liver and kidneys of all animals. Special attention to examination of the lungs of rodents should be made for evidence of infection since this provides an assessment of the state of health of the animals.

(ii) If excessive early deaths or other problems occur in the high dose group compromising the significance of the data, the next dose level should be examined for complete histopathology.

(iii) In case the results of an experiment give evidence of substantial alteration of the animals' normal longevity or the induction of effects that might affect a toxic response, the next lower dose level should be examined fully, as described under paragraph (b)(11)(i) of this section.

(iv) An attempt should be made to correlate gross observations with microscopic findings.

(c) *Data and reporting*—(1) *Treatment of results.* (i) Data should be summarized in tabular form, showing for each test group the number of animals at the start of the test, the number of animals showing lesions, the types of lesions and the percentage of animals displaying each type of lesion.

(ii) All observed results, quantitative and incidental, should be evaluated by an appropriate statistical method. Any generally accepted statistical methods may be used; the statistical methods should be selected during the design of the study.

(2) *Evaluation of study results.* (i) The findings of a chronic toxicity study should be evaluated in conjunction with the findings of preceding studies and considered in terms of the toxic effects, the necropsy and histopathological findings. The evaluation will include the relationship between the dose of the test substance and the presence, incidence and severity of abnormalities

(including behavioral and clinical abnormalities), gross lesions, identified target organs, body weight changes, effects on mortality and any other general or specific toxic effects.

(ii) In any study which demonstrates an absence of toxic effects, further investigation to establish absorption and bioavailability of the test substance should be considered.

(3) *Test report.* (i) In addition to the reporting requirements as specified under 40 CFR part 792 subpart J, the following specific information should be reported:

(A) *Group animal data.* Tabulation of toxic response data by species, strain, sex and exposure level for:

(*1*) Number of animals dying.

(*2*) Number of animals showing signs of toxicity.

(*3*) Number of animals exposed.

(B) *Individual animal data.* (*1*) Time of death during the study or whether animals survived to termination.

(*2*) Time of observation of each abnormal sign and its subsequent course.

(*3*) Body weight data.

(*4*) Feed and water consumption data, when collected.

(*5*) Results of ophthalmological examination, when performed.

(*6*) Hematological tests employed and all results.

(*7*) Clinical biochemistry tests employed and all results.

(*8*) Necropsy findings.

(*9*) Detailed description of all histopathological findings.

(*10*) Statistical treatment of results, where appropriate.

(ii) In addition, for inhalation studies the following should be reported:

(A) *Test conditions.* (*1*) Description of exposure apparatus including design, type, dimensions, source of air, system for generating particulates and aerosols, method of conditioning air, treatment of exhaust air and the method of housing the animals in a test chamber.

(*2*) The equipment for measuring temperature, humidity, and particulate aerosol concentrations and size should be described.

(B) *Exposure data.* These should be tabulated and presented with mean values and a measure of variability (e.g., standard deviation) and should include:

(*1*) Airflow rates through the inhalation equipment.

(*2*) Temperature and humidity of air.

(*3*) Nominal concentration (total amount of test substance fed into the inhalation equipment divided by volume of air).

(*4*) Actual concentration in test breathing zone.

(*5*) Particle size distribution (e.g., median aerodynamic diameter of particles with standard deviation from the mean).

(d) *References.* For additional background information on this test guideline the following references should be consulted:

(1) Benitz, K.F. ''Measurement of Chronic Toxicity,'' *Methods of Toxicology*. Ed. G.E. Paget. (Oxford: Blackwell Scientific Publications, 1970) pp. 82–131.

(2) D'Aguanno, W. ''Drug Safety Evaluation—Pre-Clinical Considerations,'' *Industrial Pharmacology: Neuroleptics.* Vol. I, Ed. S. Fielding and H. Lal. (Mt. Kisco: Futura Publishing Co. 1974) pp. 317–332.

(3) Fitzhugh, O.G. Third Printing: 1975. ''Chronic Oral Toxicity,'' *Appraisal of the Safety of Chemicals in Foods, Drugs and Cosmetics.* The Association of Food and Drug Officials of the United States (1959, 3rd Printing 1975) pp. 36–45.

(4) Goldenthal, E.I., D'Aguanno, W. ''Evaluation of Drugs,'' *Appraisal of the Safety of Chemicals in Foods, Drugs, and Cosmetics.* The Association of Food and Drug Officials of the United States (1959, 3rd Printing 1975) pp. 60–67.

(5) National Academy of Sciences. ''Principles and Procedures for Evaluating the Toxicity of Household Substances,'' a report prepared by the Committee for the Revision of NAS Publication 1138, under the auspices of the Committee on Toxicology, National Research Council, National Academy of Sciences, Washington, DC (1977).

(6) National Center for Toxicological Research. ''Appendix B,'' *Report of Chronic Studies Task Force Committee, April 13–21, 1972.* (Rockville: National Center for Toxicological Research, 1972).

(7) Page, N.P. ''Chronic Toxicity and Carcinogenicity Guidelines,'' *Journal of Environmental Pathology and Toxicology,* 1:161–182 (1977).

(8) Schwartz, E. ''Toxicology of Neuroleptic Agents,'' *Industrial Pharmacology: Neuroleptics* Ed. S. Fielding and H. Lal. (Mt. Kisco, Futura Publishing Co., 1974) pp. 203–221.

(9) United States Pharmaceutical Manufacturers Association. *Guidelines for the Assessment of Drug and Medical Device Safety in Animals.* (1977).

(10) World Health Organization. ''Guidelines for Evaluation of Drugs for Use in Man,'' *WHO Technical Report Series No. 563.* (Geneva: World Health Organization, 1975).

(11) World Health Organization. ''Part I. Environmental Health Criteria 6,'' *Principles and Methods for Evaluating the Toxicity of Chemicals.* (Geneva: World Health Organization, 1978).

(12) World Health Organization. ''Principles for Pre-Clinical Testing of Drug Safety,'' *WHO Technical Report Series No. 341.* (Geneva: World Health Organization, 1966).

[50 FR 39397, Sept. 27, 1985, as amended at 54 FR 21064, May 16, 1989]

§ 798.3300 Oncogenicity.

(a) *Purpose.* The objective of a long-term oncogenicity study is to observe test animals for a major portion of their life span for the development of neoplastic lesions during or after exposure to various doses of a test substance by an appropriate route of administration.

(b) *Test procedures*—(1) *Animal selection*—(i) *Species and strain.* A compound of unknown activity shall be tested on two mammalian species. Rats and mice are the species of choice because of their relatively short life spans, the limited cost of their maintenance, their widespread use in pharmacological and toxicological studies, their susceptibility to tumor induction, and the availability of inbred or sufficiently characterized strains. Commonly used laboratory strains shall be employed. If other species are used, the tester shall provide justification/reasoning for their selection.

(ii) *Age.* (A) Dosing of rodents shall begin as soon as possible after weaning, ideally before the animals are 6 weeks old, but in no case more than 8 weeks old.

(B) At commencement of the study, the weight variation of animals used shall not exceed ±20 percent of the mean weight for each sex.

(C) Studies using prenatal or neonatal animals may be recommended under special conditions.

(iii) *Sex.* (A) Animals of each sex shall be used at each dose level.

(B) The females shall be nulliparous and non-pregnant.

(iv) *Numbers.* (A) For rodents, at least 100 animals (50 females and 50 males) shall be used at each dose level and concurrent control.

(B) If interim sacrifices are planned the number shall be increased by the number of animals scheduled to be sacrificed during the course of the study.

(C) The number of animals at the termination of the study should be adequate for a meaningful and valid statistical evaluation of long term exposure. For a valid interpretation of negative results, it is essential that survival in all groups does not fall below 50 percent at the time of termination.

(2) *Control groups.* (i) A concurrent control group is required. This group shall be an untreated or sham treated control group or, if a vehicle is used in administering the test substance, a vehicle control group. If the toxic properties of the vehicle are not known or cannot be made available, both untreated and vehicle control groups are required.

(ii) In special circumstances such as in inhalation studies involving aerosols or the use of an emulsifier of uncharacterized biological activity in oral studies, a concurrent negative control group shall be utilized. The negative control group shall be treated in the same manner as all other test animals except that this control group shall not be exposed to either the test substance or any vehicle.

(iii) The use of historical control data (i.e., the incidence of tumors and other suspect lesions normally occurring under the same laboratory conditions and in the same strain of animals employed in the test) is desirable for assessing the significance of changes observed in exposed animals.

(3) *Dose levels and dose selection.* (i) For risk assessment purposes, at least 3 dose levels shall be used, in addition to the concurrent control group. Dose levels should be spaced to produce a gradation of chronic effects.

(ii) The high dose level should elicit signs of minimal toxicity without substantially altering the normal life span.

(iii) The lowest dose should not interfere with normal growth, development and longevity of the animal; and it should not otherwise cause any indication of toxicity. In general, this should

not be lower than ten percent of the high dose.

(iv) The intermediate dose(s) should be established in a mid-range between the high and low doses, depending upon the toxicokinetic properties of the chemical, if known.

(v) The selection of these dose levels should be based on existing data, preferably on the results of subchronic studies.

(4) *Exposure conditions.* The animals are dosed with the test substance ideally on a 7 day per week basis over a period of at least 24 months for rats, and 18 months for mice. However, based primarily on practical considerations, dosing on a 5 day per week basis is considered to be acceptable.

(5) *Observations period.* It is necessary that the duration of an oncogenicity test comprise the majority of the normal life span of the strain of animals to be used. This time period shall not be less than 24 months for rats and 18 months for mice, and ordinarily not longer than 30 months for rats and 24 months for mice. For longer time periods, and where any other species are used, consultation with the Agency in regard to the duration of the test is advised.

(6) *Administration of the test substance.* The three main routes of administration are oral, dermal, and inhalation. The choice of the route of administration depends upon the physical and chemical characteristics of the test substance and the form typifying exposure in humans.

(i) *Oral studies.* (A) The animals shall receive the test substance in their diet, dissolved in drinking water at levels that do not exceed the maximum solubility of the test chemical under testing condition.

(B) If the test substance is administered in the drinking water, or mixed in the diet, exposure shall be continuous.

(C) For a diet mixture, the highest concentration should not exceed 5 percent.

(ii) *Dermal studies.* (A) The animals are treated by topical application with the test substance, ideally for at least 6 hours per day.

(B) Fur should be clipped from the dorsal area of the trunk of the test animals. Care should be taken to avoid abrading the skin which could alter its permeability.

(C) The test substance shall be applied uniformly over a shaved area which is approximately 10 percent of the total body surface area. With highly toxic substances, the surface area covered may be less, but as much of the area shall be covered with as thin and uniform a film as possible.

(D) During the exposure period, the test substance may be held, if necessary, in contact with the skin with a porous gauze dressing and non-irritating tape. The test site should be further covered in a suitable manner to retain the gauze dressing and test substance and ensure that the animals cannot ingest the test substance.

(iii) *Inhalation studies.* (A) The animals shall be tested with inhalation equipment designed to sustain a minimum dynamic air flow of 12 to 15 air changes per hour, ensure an adequate oxygen content of 19 percent and an evenly distributed exposure atmosphere. Where a chamber is used, its design should minimize crowding of the test animals and maximize their exposure to the test substance. This is best accomplished by individual caging. To ensure stability of a chamber atmosphere, the total ''volume'' of the test animals shall not exceed 5 percent of the volume of the test chamber. Alternatively, oro-nasal, head-only, or whole-body individual chamber exposure may be used.

(B) The temperature at which the test is performed should be maintained at 22 °C (±2°). Ideally, the relative humidity should be maintained between 40 to 60 percent, but in certain instances (e.g. tests of aerosols, use of water vehicle) this may not be practicable.

(C) Feed and water shall be withheld during each daily 6-hour exposure period.

(D) A dynamic inhalation system with a suitable flow control system shall be used. The rate of air flow shall be adjusted to ensure that conditions throughout the equipment are essentially the same. Maintenance of slight negative pressure inside the chamber will prevent leakage of the test substance into the surrounding areas.

(7) *Observations of animals.* (i) Each animal shall be observed daily and if necessary should be handled to appraise its physical condition.

(ii) Additional observations shall be made daily with appropriate actions taken to minimize loss of animals to the study (e.g., necropsy or refrigeration of those animals found dead and isolation or sacrifice of weak or moribund animals).

(iii) Clinical signs and mortality shall be recorded for all animals. Special attention should be paid to tumor development. The day of onset, location, dimensions, appearance and progression of each grossly visible or palpable tumor shall be recorded.

(iv) Body weights shall be recorded individually for all animals once a week during the first 13 weeks of the test period and at least once every 4 weeks thereafter unless signs of clinical toxicity suggest more frequent weighings to facilitate monitoring of health status.

(v) When the test substance is administered in the feed or drinking water, measurements of feed or water consumption, respectively, shall be determined weekly during the first 13 weeks of the study and then at approximately monthly intervals unless health status or body weight changes dictate otherwise.

(vi) At the end of the study period all survivors are sacrificed. Moribund animals shall be removed and sacrificed when noticed.

(8) *Physical measurements.* For inhalation studies, measurements or monitoring should be made of the following:

(i) The rate of air flow shall be monitored continuously and recorded at intervals of at least once every 30 minutes.

(ii) During each exposure period the actual concentrations of the test substance shall be held as constant as practicable, monitored continuously and recorded at least three times during the test period: at the beginning, at an intermediate time and at the end of the period.

(iii) During the development of the generating system, particle size analysis shall be performed to establish the stability of aerosol concentrations with respect to particle size. During exposure, analyses shall be conducted as often as necessary to determine the consistency of particle size, distribution, and homogeneity of the exposure stream.

(iv) Temperature and humidity shall be monitored continuously, but shoud be recorded at intervals of at least once every 30 minutes.

(9) *Clinical examinations.* At 12 months, 18 months, and at sacrifice, a blood smear shall be obtained from all animals. A differential blood count shall be performed on blood smears from those animals in the highest dosage group and the controls. If these data, or data from the pathological examination indicate a need, then the 12- and 18-month blood smears from other dose levels shall also be examined. Differential blood counts shall be performed for the next lower group(s) if there is a major discrepancy between the highest group and the controls. If clinical observations suggest a deterioration in health of the animals during the study, a differential blood count of the affected animals shall be performed.

(10) *Gross necropsy*. (i) A complete gross examination shall be performed on all animals, including those which died during the experiment or were killed in moribund conditions.

(ii) The following organs and tissues or representative samples thereof, shall be preserved in a suitable medium for possible future histopathological examination: All gross lesions and tumors of all animals shall be preserved; brain—including sections of medulla/pons, cerebellar cortex and cerebral cortex; pituitary; thyroid/parathyroid; thymus; lungs; trachea; heart; spinal cord at three levels—cervical, midthoracic and lumbar; sternum and/or femur with bone marrow; salivary glands; liver; spleen; kidneys; adrenals; esophagus; stomach; duodenum; jejunum; ileum; cecum; colon; rectum; urinary bladder; representative lymph nodes; pancreas; gonads; uterus; accessory genital organs (epididymis, prostate, and, if present, seminal vesicles); mammary gland; skin; musculature; peripheral nerve; and eyes. In inhalation studies, the entire respiratory tract shall be preserved, including nasal cavity, pharynx, larynx and paranasal sinuses. In

dermal studies, skin from sites of skin painting shall be examined and preserved.

(iii) Inflation of lungs and urinary bladder with a fixative is the optimal method for preservation of these tissues. The proper inflation and fixation of the lungs in inhalation studies is required for appropriate and valid histopathological examination.

(iv) If other clinical examinations are carried out, the information obtained from these procedures shall be available before microscopic examination, since they may provide significant guidance to the pathologist.

(11) *Histopathology*. (i) The following histopathology shall be performed:

(A) Full histopathology on organs and tissues listed above of all animals in the control and high dose groups and all animals that died or were killed during the study.

(B) All gross lesions in all animals.

(C) Target organs in all animals.

(ii) If a significant difference is observed in hyperplastic, pre-neoplastic or neoplastic lesions between the highest dose and control groups, microscopic examination shall be made on that particular organ or tissue of all animals in the study.

(iii) If excessive early deaths or other problems occur in the high dose group, compromising the significance of the data, the next lower dose level shall be examined for complete histopathology.

(iv) In case the results of an experiment give evidence of substantial alteration of the animals' normal longevity or the induction of effects that might affect a neoplastic response, the next lower dose level shall be examined fully as described in this section.

(v) An attempt shall be made to correlate gross observations with microscopic findings.

(c) *Data and reporting*—(1) *Treatment of results*. (i) Data shall be summarized in tabular form, showing for each test group the number of animals at the start of the test, the number of animals showing lesions, the types of lesions and the percentage of animals displaying each type of lesion.

(ii) All observed results, quantitative and incidental, shall be evaluated by an appropriate statistical method. Any generally accepted statistical method may be used; the statistical methods shall be selected during the design of the study.

(2) *Evaluation of study results*. (i) The findings of an oncogenic toxicity study shall be evaluated in conjunction with the findings of preceding studies and considered in terms of the toxic effects, the necropsy and histopathological findings. The evaluation shall include the relationship between the dose of the test substance and the presence, incidence and severity of abnormalities (including behavioral and clinical abnormalities), gross lesions, identified target organs, body weight changes, effects on mortality and any other general or specific toxic effects.

(ii) In any study which demonstrates an absence of toxic effects, further investigation to establish absorption and bioavailability of the test substance should be considered.

(iii) In order for a negative test to be acceptable, it shall meet the following criteria: no more than 10 percent of any group is lost due to autolysis, cannibalism, or management problems; and survival in each group should be no less than 50 percent at 18 months for mice and hamsters and at 24 months for rats.

(3) *Test report*. (i) In addition to the reporting requirements as specified under 40 CFR part 792, subpart J the following specific information shall be reported:

(A) *Group animal data*. Tabulation of toxic response data by species, strain, sex and exposure level for:

(*1*) Number of animals dying.

(*2*) Number of animals showing signs of toxicity.

(*3*) Number of animals exposed.

(B) *Individual animal data*. (*1*) Time of death during the study or whether animals survived to termination.

(*2*) Time of observation of each abnormal sign and its subsequent course.

(*3*) Body weight data.

(*4*) Feed and water consumption data, when collected.

(*5*) Results of ophthalmological examination, when performed.

(*6*) Hematological tests employed and all results.

(*7*) Clinical biochemistry tests employed and all results.

(*8*) Necropsy findings.

(*9*) Detailed description of all histopathological findings.

(*10*) Statistical treatment of results, where appropriate.

(*11*) Historical control data, if taken into account.

(ii) In addition, for inhalation studies the following shall be reported:

(A) *Test conditions.* (1) Description of exposure apparatus including design, type, dimensions, source of air, system for generating particulates and aerosols, method of conditioning air, treatment of exhaust air and the method of housing the animals in a test chamber.

(*2*) The equipment for measuring temperature, humidity, and particulate aerosol concentrations and size shall be described.

(B) *Exposure data.* These shall be tabulated and presented with mean values and a measure of variability (e.g., standard deviation) and shall include:

(*1*) Airflow rates through the inhalation equipment.

(*2*) Temperature and humidity of air.

(*3*) Nominal concentration (total amount of test substance fed into the inhalation equipment divided by volume of air).

(*4*) Actual concentration in test breathing zone.

(*5*) Particle size distribution (e.g., median aerodynamic diameter of particles with standard deviation from the mean).

(d) *References.* For additional background information on this test guideline the following references should be consulted:

(1) Department of Health and Welfare. *The Testing of Chemicals* for Carcinogenicity, Mutagenicity, Teratogenicity. Minister of Health and Welfare. (Canada: Department of Health and Welfare, 1975).

(2) Food and Drug Administration Advisory Committee on Protocols for Safety Evaluation: Panel on Carcinogenesis. ''Report on Cancer Testing in the Safety of Food Additives and Pesticides,'' *Toxicology and Applied Pharmacology*. 20:419–438 (1971).

(3) International Union Against Cancer. ''Carcinogenicity Testing,'' *IUCC Technical Report Series.* Vol. 2., Ed. I. Berenblum. (Geneva: International Union Against Cancer, 1969).

(4) Leong, B.K.J., Laskin, S. ''Number and Species of Experimental Animals for Inhalation Carcinogenicity Studies'' Paper presented at Conference on Target Organ Toxicity, September 1975, Cincinnati, Ohio.

(5) National Academy of Sciences. ''Principles and Procedures for Evaluating the Toxicity of Household Substances.'' A report prepared by the Committee for the Revision of NAS Publication 1138, under the auspices of the Committee on Toxicology, National Research Council, National Academy of Sciences, Washington, DC (1977).

(6) National Cancer Institute. *Report of the Subtask Group on Carcinogen Testing to the Interagency Collaborative Group on Environmental Carcinogenesis.* (Bethesda: United States National Cancer Institute, 1976).

(7) National Center for Toxicological Research. ''Appendix B,'' *Report of Chronic Studies Task Force Committee.* April 13–21 (Rockville: National Center for Toxicological Research, 1972).

(8) Page, N.P. ''Chronic Toxicity and Carcinogenicity Guidelines,'' *Journal of Environmental Pathology and Toxicology*. 1:161–182 (1977).

(9) Page, N.P. ''Concepts of a Bioassay Program in Environmental Carcinogenesis,'' *Advances in Modern Toxicology Vol. 3,* Ed. Kraybill and Mehlman. (Washington, DC: Hemisphere Publishing Corporation, 1977) pp. 87–171.

(10) Sontag, J.M., Page N.P., Saffiotti, U. *Guidelines for Carcinogen Bioassay in Small Rodents.* NCI–CS–TR–1. (Bethesda: United States Cancer Institute, Division of Cancer Control and Prevention, Carcinogenesis Bioassay Program, 1976).

(11) United States Pharmaceutical Manufacturers Association. *Guidelines for the Assessment of Drug and Medical Device Safety in Animals.* (1977).

(12) World Health Organization. ''Principles for the Testing and Evaluation of Drugs for Carcinogenicity,'' *WHO Technical Report Series No. 426.* (Geneva: World Health Organization, 1969).

(13) World Health Organization. ''Part I. Environmental Health Criteria 6,'' *Principles and Methods for Evaluating the Toxicity of Chemicals.* (Geneva: World Health Organization, 1978).

[50 FR 39397, Sept. 27, 1985, as amended at 52 FR 19075, May 20, 1987; 54 FR 21064, May 16, 1989]

§ 798.3320 Combined chronic toxicity/oncogenicity.

(a) *Purpose.* The objective of a combined chronic toxicity/oncogenicity study is to determine the effects of a substance in a mammalian species following prolonged and repeated exposure. The application of this guideline should generate data which identify the majority of chronic and oncogenic effects and determine dose-response relationships. The design and conduct

should allow for the detection of neoplastic effects and a determination of oncogenic potential as well as general toxicity, including neurological, physiological, biochemical, and hematological effects and exposure-related morphological (pathology) effects.

(b) *Test procedures*—(1) *Animal selection*—(i) *Species and strain.* Preliminary studies providing data on acute, subchronic, and metabolic responses should have been carried out to permit an appropriate choice of animals (species and strain). As discussed in other guidelines, the mouse and rat have been most widely used for assessment of oncogenic potential, while the rat and dog have been most often studied for chronic toxicity. The rat is the species of choice for combined chronic toxicity and oncogenicity studies. The provisions of this guideline are designed primarily for use with the rat as the test species. If other species are used, the tester should provide justification/reasoning for their selection. The strain selected should be susceptible to the oncogenic or toxic effect of the class of substances being tested, if known, and provided it does not have a spontaneous background too high for meaningful assessment. Commonly used laboratory strains should be employed.

(ii) *Age.* (A) Dosing of rats should begin as soon as possible after weaning, ideally before the rats are 6 weeks old, but in no case more than 8 weeks old.

(B) At commencement of the study, the weight variation of animals used should not exceed ±20 percent of the mean weight for each sex.

(C) Studies using prenatal or neonatal animals may be recommended under special conditions.

(iii) *Sex.* (A) Equal numbers of animals of each sex should be used at each dose level.

(B) The females should be nulliparous and nonpregnant.

(iv) *Numbers.* (A) At least 100 rodents (50 females and 50 males) should be used at each dose level and concurrent control for those groups not intended for early sacrifice. At least 40 rodents (20 females and 20 males) should be used for satellite dose group(s) and the satellite control group. The purpose of the satellite group is to allow for the evaluation of pathology other than neoplasia.

(B) If interim sacrifices are planned, the number of animals should be increased by the number of animals scheduled to be sacrificed during the course of the study.

(C) The number of animals at the termination of each phase of the study should be adequate for a meaningful and valid statistical evaluation of long term exposure. For a valid interpretation of negative results, it is essential that survival in all groups not fall below 50 percent at the time of termination.

(2) *Control groups.* (i) A concurrent control group (50 females and 50 males) and a satellite control group (20 females and 20 males) are recommended. These groups should be untreated or sham treated control groups or, if a vehicle is used in administering the test substance, vehicle control groups. If the toxic properties of the vehicle are not known or cannot be made available, both untreated and vehicle control groups are recommended. Animals in the satellite control group should be sacrificed at the same time the satellite test group is terminated.

(ii) In special circumstances such as inhalation studies involving aerosols or the use of an emulsifier of uncharacterized biological activity in oral studies, a concurrent negative control group should be utilized. The negative control group should be treated in the same manner as all other test animals, except that this control group should not be exposed to the test substance or any vehicle.

(iii) The use of historical control data (i.e., the incidence of tumors and other suspect lesions normally occuring under the same laboratory conditions and in the same strain of animals employed in the test) is desirable for assessing the significance of changes observed in exposed animals.

(3) *Dose levels and dose selection.* (i) For risk assessment purposes, at least three dose levels should be used, in addition to the concurrent control group. Dose levels should be spaced to produce a gradation of effects.

(ii) The highest dose level in rodents should elicit signs of toxicity without

substantially altering the normal life span due to effects other than tumors.

(iii) The lowest dose level should produce no evidence of toxicity. Where there is a usable estimation of human exposure, the lowest dose level should exceed this even though this dose level may result in some signs of toxicity.

(iv) Ideally, the intermediate dose level(s) should produce minimal observable toxic effects. If more than one intermediate dose is used the dose levels should be spaced to produce a gradation of toxic effects.

(v) For rodents, the incidence of fatalities in low and intermediate dose groups and in the controls should be low to permit a meaningful evaluation of the results.

(vi) For chronic toxicological assessment, a high dose treated satellite and a concurrent control satellite group should be included in the study design. The highest dose for satellite animals should be chosen so as to produce frank toxicity, but not excessive lethality, in order to elucidate a chronic toxicological profile of the test substance. If more than one dose level is selected for satellite dose groups, the doses should be spaced to produce a gradation of toxic effects.

(4) *Exposure conditions.* The animals are dosed with the test substance ideally on a 7-day per week basis over a period of at least 24 months for rats, and 18 months for mice and hamsters, except for the animals in the satellite groups which should be dosed for 12 months.

(5) *Observation period.* It is necessary that the duration of the oncogenicity test comprise the majority of the normal life span of the animals to be used. It has been suggested that the duration of the study should be for the entire lifetime of all animals. However, a few animals may greatly exceed the average lifetime and the duration of the study may be unnecessarily extended and complicate the conduct and evaluation of the study. Rather, a finite period covering the majority of the expected life span of the strain is preferred since the probability is high that, for the great majority of chemicals, induced tumors will occur within such an observation period. The following guidelines are recommended:

(i) Generally, the termination of the study should be at 18 months for mice and hamsters and 24 months for rats; however, for certain strains of animals with greater longevity and/or low spontaneous tumor rate, termination should be at 24 months for mice and hamsters and at 30 months for rats. For longer time periods, and where any other species are used, consultation with the Agency in regard to duration of the test is advised.

(ii) However, termination of the study is acceptable when the number of survivors of the lower doses or of the control group reaches 25 percent. In the case where only the high dose group dies prematurely for obvious reasons of toxicity, this should not trigger termination of the study.

(iii) The satellite groups and the concurrent satellite control group should be retained in the study for at least 12 months. These groups should be scheduled for sacrifice for an estimation of test-substance-related pathology uncomplicated by geriatric changes.

(6) *Administration of the test substance.* The three main routes of administration are oral, dermal, and inhalation. The choice of the route of administration depends upon the physical and chemical characteristics of the test substance and the form typifying exposure in humans.

(i) *Oral studies.* (A) The animals should receive the test substance in their diet, dissolved in drinking water, or given by gavage or capsule for a period of at least 24 months for rats and 18 months for mice and hamsters.

(B) If the test substance is administered in the drinking water, or mixed in the diet, exposure is continuous.

(C) For a diet mixture, the highest concentration should not exceed 5 percent.

(ii) *Dermal studies.* (A) The animals are treated by topical application with the test substance, ideally for at least 6 hours per day.

(B) Fur should be clipped from the dorsal area of the trunk of the test animals. Care should be taken to avoid abrading the skin which could alter its permeability.

(C) The test substance should be applied uniformly over a shaved area which is approximately 10 percent of

the total body surface area. With highly toxic substances, the surface area covered may be less, but as much of the area as possible should be covered with as thin and uniform a film as possible.

(D) During the exposure period, the test substance may be held, if necessary, in contact with the skin with a porous gauze dressing and nonirritating tape. The test site should be further covered in a suitable manner to retain the gauze dressing and test substance and ensure that the animals cannot ingest the test substance.

(iii) *Inhalation studies.* (A) The animals should be tested with inhalation equipment designed to sustain a dynamic air flow of 12 to 15 air changes per hour, to ensure an adequate oxygen content of 19 percent and an evenly distributed exposure atmosphere. Where a chamber is used, its design should minimize crowding of the test animals and maximize their exposure to the test substance. This is best accomplished by individual caging. As a general rule, to ensure stability of a chamber atmosphere, the total ''volume'' of the test animals should not exceed 5 percent of the volume of the test chamber. Alternatively, oro-nasal, head only, or whole body individual chamber exposure may be used.

(B) The temperature at which the test is performed should be maintained at 22 °C (±2°). Ideally, the relative humidity should be maintained between 40 to 60 percent, but in certain instances (e.g., tests of aerosols, use of water vehicle) this may not be practicable.

(C) Feed and water should be withheld during each daily 6-hour exposure period.

(D) A dynamic inhalation system with a suitable analytical concentration control system should be used. The rate of air flow should be adjusted to ensure that conditions throughout the equipment are essentially the same. Maintenance of slight negative pressure inside the chamber will prevent leakage of the test substance into the surrounding areas.

(7) *Observation of animals.* (i) Each animal should be handled and its physical condition appraised at least once each day.

(ii) Additional observations should be made daily with appropriate actions taken to minimize loss of animals to the study (e.g., necropsy or refrigeration of those animals found dead and isolation or sacrifice of weak or moribund animals).

(iii) Clinical signs and mortality should be recorded for all animals. Special attention should be paid to tumor development. The time of onset, location, dimensions, appearance and progression of each grossly visible or palpable tumor should be recorded.

(iv) Body weights should be recorded individually for all animals once a week during the first 13 weeks of the test period and at least once every 4 weeks thereafter, unless signs of clinical toxicity suggest more frequent weighings to facilitate monitoring of health status.

(v) When the test substance is administered in the feed or drinking water, measurements of feed or water consumption, respectively, should be determined weekly during the first 13 weeks of the study and then at approximately monthly intervals unless health status or body weight changes dictate otherwise.

(vi) At the end of the study period, all survivors are sacrificed. Moribund animals should be removed and sacrificed when noticed.

(8) *Physical measurements.* For inhalation studies, measurements or monitoring should be made of the following:

(i) The rate of airflow should be monitored continuously, but should be recorded at intervals of at least once every 30 minutes.

(ii) During each exposure period the actual concentrations of the test substance should be held as constant as practicable, monitored continuously and recorded at least three times during the test period: At the beginning, at an intermediate time and at the end of the period.

(iii) During the development of the generating system, particle size analysis should be performed to establish the stability of aerosol concentrations. During exposure, analyses should be conducted as often as necessary to determine the consistency of particle size distribution and homogeneity of the exposure stream.

(iv) Temperature and humidity should be monitored continuously, but should be recorded at intervals of at least once every 30 minutes.

(9) *Clinical examinations.* (i) The following examinations should be made on at least 20 rodents of each sex per dose level:

(A) Certain hematology determinations (e.g., hemoglobin content, packed cell volume, total red blood cells, total white blood cells, platelets, or other measures of clotting potential) should be performed at termination and should be performed at 3 months, 6 months and at approximately 6-month intervals thereafter (for those groups on test for longer than 12 months) on blood samples collected from 20 rodents per sex of all groups. These collections should be from the same animals at each interval. If clinical observations suggest a deterioration in health of the animals during the study, a differential blood count of the affected animals should be performed. A differential blood count should be performed on samples from animals in the highest dosage group and the controls. Differential blood counts should be performed for the next lower group(s) if there is a major discrepancy between the highest group and the controls. If hematological effects were noted in the subchronic test, hematological testing should be performed at 3, 6, 12, 18 and 24 months for a year study.

(B) Certain clinical biochemistry determinations on blood should be carried out at least three times during the test period: Just prior to initiation of dosing (baseline data), near the middle and at the end of the test period. Blood samples should be drawn for clinical measurements from at least ten rodents per sex of all groups; if possible, from the same rodents at each time interval. Test areas which are considered appropriate to all studies: electrolyte balance, carbohydrate metabolism and liver and kidney function. The selection of specific tests will be influenced by observations on the mode of action of the substance and signs of clinical toxicity. Suggested chemical determinations: Calcium, phosphorus, chloride, sodium, potassium, fasting glucose (with period of fasting appropriate to the species), serum glutamic-pyruvic transaminase (now known as serum alanine aminotransferase), serum glutamic oxaloacetic transaminase (now known as serum aspartate aminotransferase), ornithine decarboxylase, gamma glutamyl transpeptidase, blood urea nitrogen, albumen, creatinine phosphokinase, total cholesterol, total bilirubin and total serum protein measurements. Other determinations which may be necessary for an adequate toxicological evaluation include analyses of lipids, hormones, acid/base balance, methemoglobin and cholinesterase activity. Additional clinical biochemistry may be employed where necessary to extend the investigation of observed effects.

(ii) The following should be performed on at least 10 rodents of each sex per dose level:

(A) Urine samples from the same rodents at the same intervals as hematological examination above, should be collected for analysis. The following determinations should be made from either individual animals or on a pooled sample/sex/group for rodents: appearance (volume and specific gravity), protein, glucose, ketones, bilirubin, occult blood (semi-quantitatively) and microscopy of sediment (semi-quantitatively).

(B) Ophthalmological examination, using an ophthalmoscope or equivalent suitable equipment, should be made prior to the administration of the test substance and at the termination of the study. If changes in the eyes are detected, all animals should be examined.

(10) *Gross necropsy.* (i) A complete gross examination should be performed on all animals, including those which died during the experiment or were killed in moribund conditions.

(ii) The liver, kidneys, adrenals, brain and gonads should be weighed wet, as soon as possible after dissection to avoid drying. For these organs, at least 10 rodents per sex per group should be weighed.

(iii) The following organs and tissues, or representative samples thereof, should be preserved in a suitable medium for possible future histopathological examination: All gross lesions and

tumors; brain-including sections of medulla/pons, cerebellar cortex, and cerebral cortex; pituitary; thyroid/parathyroid; thymus; lungs; trachea; heart; sternum and/or femur with bone marrow; salivary glands; liver; spleen; kidneys; adrenals; esophagus; stomach; duodenum; jejunum; ileum; cecum; colon; rectum; urinary bladder; representative lymph nodes; pancreas; gonads; uterus; accessory genital organs (epididymis, prostate, and, if present, seminal vesicles); female mammary gland; aorta; gall bladder (if present); skin; musculature; peripheral nerve; spinal cord at three levels—cervical, midthoracic, and lumbar; and eyes. In inhalation studies, the entire respiratory tract, including nose, pharynx, larynx and paranasal sinuses should be examined and preserved. In dermal studies, skin from sites of skin painting should be examined and preserved.

(iv) Inflation of lungs and urinary bladder with a fixative is the optimal method for preservation of these tissues. The proper inflation and fixation of the lungs in inhalation studies is considered essential for appropriate and valid histopathological examination.

(v) If other clinical examinations are carried out, the information obtained from these procedures should be available before microscopic examination, since they may provide significant guidance to the pathologist.

(11) *Histopathology.* (i) The following histopathology should be performed:

(A) Full histopathology on the organs and tissues, listed above, of all non-rodents, of all rodents in the control and high dose groups and of all rodents that died or were killed during the study.

(B) All gross lesions in all animals.

(C) Target organs in all animals.

(D) Lungs, liver and kidneys of all animals. Special attention to examination of the lungs of rodents should be made for evidence of infection since this provides an assessment of the state of health of the animals.

(ii) If excessive early deaths or other problems occur in the high dose group compromising the significance of the data, the next dose level should be examined for complete histopathology.

(iii) In case the results of the experiment give evidence of substantial alteration of the animals' normal longevity or the induction of effects that might affect a toxic response, the next lower dose level should be examined as described above.

(iv) An attempt should be made to correlate gross observations with microscopic findings.

(c) *Data and reporting*—(1) *Treatment of results.* (i) Data should be summarized in tabular form, showing for each test group the number of animals at the start of the test, the number of animals showing lesions, the types of lesions and the percentage of animals displaying each type of lesion.

(ii) All observed results, quantitative and incidental, should be evaluated by an appropriate statistical method. Any generally accepted statistical methods may be used; the statistical methods should be selected during the design of the study.

(2) *Evaluation of study results.* (i) The findings of a combined chronic toxicity/oncogenicity study should be evaluated in conjunction with the findings of preceding studies and considered in terms of the toxic effects, the necropsy and histopathological findings. The evaluation will include the relationship between the dose of the test substance and the presence, incidence and severity of abnormalities (including behavioral and clinical abnormalities), gross lesions, identified target organs, body weight changes, effects on mortality and any other general or specific toxic effects.

(ii) In any study which demonstrates an absence of toxic effects, further investigation to establish absorption and bioavailablity of the test substance should be considered.

(iii) In order for a negative test to be acceptable, it should meet the following criteria: No more than 10 percent of any group is lost due to autolysis, cannibalism, or management problems; and survival in each group is no less than 50 percent at 18 months for mice and hamsters and at 24 months for rats.

(3) *Test report.* (i) In addition to the reporting requirements as specified under 40 CFR part 792, subpart J the

following specific information should be reported:

(A) *Group animal data.* Tabulation of toxic response data by species, strain, sex and exposure level for:

(*1*) Number of animals dying.

(*2*) Number of animals showing signs of toxicity.

(*3*) Number of animals exposed.

(B) *Individual animal data.* (*1*) Time of death during the study or whether animals survived to termination.

(*2*) Time of observation of each abnormal sign and its subsequent course.

(*3*) Body weight data.

(*4*) Feed and water consumption data, when collected.

(*5*) Results of ophthalmological examination, when performed.

(*6*) Hematological tests employed and all results.

(*7*) Clinical biochemistry tests employed and all results.

(*8*) Necropsy findings.

(*9*) Detailed description of all histopathological findings.

(*10*) Statistical treatment of results where appropriate.

(*11*) Historical control data, if taken into account.

(ii) In addition, for inhalation studies the following should be reported:

(A) *Test conditions.* (*1*) Description of exposure apparatus including design, type, dimensions, source of air, system for generating particulates and aerosols, method of conditioning air, treatment of exhaust air and the method of housing the animals in a test chamber.

(*2*) The equipment for measuring temperature, humidity, and particulate aerosol concentrations and size should be described.

(B) *Exposure data.* These should be tabulated and presented with mean values and a measure of variability (e.g. standard deviation) and should include:

(*1*) Airflow rates through the inhalation equipment.

(*2*) Temperature and humidity of air.

(*3*) Nominal concentration (total amount of test substance fed into the inhalation equipment divided by volume of air).

(*4*) Actual concentration in test breathing zone.

(*5*) Particle size distribution (e.g. median aerodynamic diameter of particles with standard deviation from the mean).

(d) *References.* For additional background information on this test guideline the following references should be consulted:

(1) Benitz, K.F. ''Measurement of Chronic Toxicity,'' *Methods of Toxicology.* Ed. G.E. Paget. (Oxford: Blackwell Scientific Publications, 1970) pp. 82–131.

(2) D'Aguanno, W. ''Drug Safety Evaluation—Pre-Clinical Considerations,'' ''*Industrial Pharmacology: Neuroleptics.* Vol. I Ed. S. Fielding and H. Lal. (Mt. Kisco, New York: Futura Publishing Co., 1974) pp. 317–332.

(3) Department of Health and Welfare. *The Testing of Chemicals for Carcinogenicity, Mutagenicity, Teratogenicity. Minister of Health and Welfare. (Canada: Department of Health and Welfare, 1975).*

(4) Fitzhugh, O.G. ''Chronic Oral Toxicity,'' *Appraisal of the Safety of Chemicals in Foods, Drugs and Cosmetics.* The Association of Food and Drug Officials of the United States (1959, 3rd Printing 1975). pp. 36–45.

(5) Food and Drug Administration Advisory Committee on Protocols for Safety Evaluation: Panel on Carcinogenesis. ''*Report on Cancer Testing in the Safety of Food Additives and Pesticides,'' Toxicology and Applied Pharmacology.* 20:419–438 (1971).

(6) Goldenthal, E.I., and D'Aguanno, W. ''Evaluation of Drugs,'' *Appraisal of the Safety of Chemicals in Foods, Drugs, and Cosmetics.* The Association of Food and Drug Officials of the United States (1959, 3rd printing 1975) pp.60–67.

(7) International Union Against Cancer. ''Carcinogenicity Testing,'' *IUCC Technical Report Series* Vol. 2, Ed. I. Berenblum. (Geneva: International Union Against Cancer, 1969).

(8) Leong, B.K.J., and Laskin, S. ''Number and Species of Experimental Animals for Inhalation Carcinogenicity Studies,'' Paper presented at Conference on Target Organ Toxicity. September, 1975, Cincinnati, Ohio.

(9) National Academy of Sciences. ''Principles and Procedures for Evaluating the Toxicity of Household Substances,'' A report prepared by the Committee for the Revision of NAS Publication 1138, under the auspices of the Committee on Toxicology, National Research Council, National Academy of Sciences, Washington, DC (1977).

(10) National Cancer Institute. *Report of the Subtask Group on Carcinogen Testing to the Interagency Collaborative Group on Environmental Carcinogenesis.* (Bethesda: United States National Cancer Institute, 1976).

(11) National Center for Toxicological. *Report of Chronic Studies Task Force Research Committee. ''Appendix B, (Rockville: National Center for Toxicological Research, 1972)).*

(12) Page, N.P. ''Chronic Toxicity and Carcinogenicity Guidelines,'' *Journal Environmental Pathology and Toxicology*. 1:161–182 (1977).

(13) Page, N.P. ''Concepts of a Bioassay Program in Environmental Carcinogenesis,'' *Advances in Modern Toxicology* Volume 3, Ed. Kraybill and Mehlman. (Washington, D.C.: Hemisphere Publishing Corp., 1977) pp. 87–171.

(14) Schwartz, E. 1974. ''Toxicology of Neuroleptic Agents,'' *Industrial Pharmacology: Neuroleptics*. Ed. S. Fielding and H. Lal. (Mt. Kisco, New York: Futura Publishing Co, 1974) pp. 203–221.

(15) Sontag, J.M., Page, N.P., and Saffiotti, U. *Guidelines for Carcinogen Bioassay in Small Rodents*. NCI–CS–TR–1 (Bethesda: United States Cancer Institute, Division of Cancer Control and Prevention, Carcinogenesis Bioassay Program, 1976).

(16) United States Pharmaceutical Manufacturers Association. *Guidelines for the Assessment of Drug and Medical Device Safety in Animals*. (1977).

(17) World Health Organization. ''Principles for the Testing and Evaluation of Drugs for Carcinogenicity,'' *WHO Technical Report Series No. 426*. (Geneva: World Health Organization, 1969).

(18) World Health Organization. ''Guidelines for Evaluation of Drugs for Use in Man,'' *WHO Technical Report Series No. 563*. (Geneva: World Health Organization, 1975).

(19) World Health Organization. ''Part I. Environmental Health Criteria 6,'' *Principles and Methods for Evaluating the Toxicity of Chemicals*. (Geneva: World Health Organization, 1978).

(20) World Health Organization. ''Principles for Pre-Clinical Testing of Drug Safety,'' *WHO Technical Report Series No. 341*. (Geneva: World Health Organization, 1966).

[50 FR 39397, Sept. 27, 1985, as amended at 54 FR 21064, May 16, 1989]

Subpart E—Specific Organ/Tissue Toxicity

§ 798.4100 Dermal sensitization.

(a) *Purpose*. In the assessment and evaluation of the toxic characteristics of a substance, determination of its potential to provoke skin sensitization reactions is important. Information derived from tests for skin sensitization serves to identify the possible hazard to a population repeatedly exposed to a test substance. While the desirability of skin sensitization testing is recognized, there are some real differences of opinion about the best method to use. The test selected should be a reliable screening procedure which should not fail to identify substances with significant allergenic potential, while at the same time avoiding false negative results.

(b) *Definitions*. (1) Skin sensitization (allergic contact dermatitis) is an immunologically mediated cutaneous reaction to a substance. In the human, the responses may be characterized by pruritis, erythema, edema, papules, vesicles, bullae, or a combination of these. In other species the reactions may differ and only erythema and edema may be seen.

(2) Induction period is a period of at least 1 week following a sensitization exposure during which a hypersensitive state is developed.

(3) Induction exposure is an experimental exposure of a subject to a test substance with the intention of inducing a hypersensitive state.

(4) Challenge exposure is an experimental exposure of a previously treated subject to a test substance following an induction period, to determine whether the subject will react in a hypersensitive manner.

(c) *Principle of the test method*. Following initial exposure(s) to a test substance, the animals are subsequently subjected, after a period of not less than 1 week, to a challenge exposure with the test substance to establish whether a hypersensitive state has been induced. Sensitization is determined by examining the reaction to the challenge exposure and comparing this reaction to that of the initial induction exposure.

(d) *Test procedures*. (1) Any of the following seven test methods is considered to be acceptable. It is realized, however, that the methods differ in their probability and degree of reaction to sensitizing substances.

(i) Freund's complete adjuvant test.

(ii) Guinea-pig maximization test.

(iii) Split adjuvant technique.

(iv) Buehler test.

(v) Open epicutaneous test.

(vi) Mauer optimization test.

(vii) Footpad technique in guinea pig.

(2) Removal of hair is by clipping, shaving, or possibly by depilation, depending on the test method used.

(3) *Animal selection*—(i) *Species and strain*. The young adult guinea pig is the preferred species. Commonly used

laboratory strains should be employed. If other species are used, the tester should provide justification/reasoning for their selection.

(ii) *Number and sex.* (A) The number and sex of animals used will depend on the method employed.

(B) The females should be nulliparous and nonpregnant.

(4) *Control animals.* (i) Periodic use of a positive control substance with an acceptable level of reliability for the test system selected is recommended;

(ii) Animals may act as their own controls or groups of induced animals can be compared to groups which have received only a challenge exposure.

(5) *Dose levels.* The dose level will depend upon the method selected.

(6) *Observation of animals.* (i) Skin reactions should be graded and recorded after the challenge exposures at the time specified by the methodology selected. This is usually at 24, 48, and 72, hours. Additional notations should be made as necessary to fully describe unusual responses;

(ii) Regardless of method selected, initial and terminal body weights should be recorded.

(7) *Procedures.* The procedures to be used are those described by the methodology chosen.

(e) *Data and reporting.* (1) Data should be summarized in tabular form, showing for each individual animal the skin reaction, results of the induction exposure(s) and the challenge exposure(s) at times indicated by the method chosen. As a minimum, the erythema and edema should be graded and any unusual finding should be recorded.

(2) *Evaluation of the results.* The evaluation of results will provide information on the proportion of each group that became sensitized and the extent (slight, moderate, severe) of the sensitization reaction in each individual animal.

(3) *Test report.* In addition to the reporting requirements as specified under 40 CFR part 792, subpart J, the following specific information should be reported:

(i) A description of the method used and the commonly accepted name.

(ii) Information on the positive control study, including positive control used, method used, and time conducted.

(iii) The number and sex of the test animals.

(iv) Species and strain.

(v) Individual weights of the animals at the start of the test and at the conclusion of the test.

(vi) A brief description of the grading system.

(vii) Each reading made on each individual animal.

(f) *References.* For additional background information on this test guideline the following references should be consulted:

(1) Buehler, E.V. ''Delayed Contact Hypersensitivity in the Guinea Pig,'' *Archives Dermatology*. 91:171 (1965).

(2) Draize, J.H. ''Dermal Toxicity,'' *Food Drug Cosmetic Law Journal.* 10:722–732 (1955).

(3) Klecak, G. ''Identification of Contact Allergens: Predictive Tests in Animals,'' *Advances in Modern Toxicology: Dermatology and Pharmacology*. Ed. F.N. Marzulli and H.I. Maibach. (Washington, D.C.: Hemisphere Publishing Corp., 1977) 4:305–339).

(4) Klecak, G., Geleick, H., Grey, J.R. ''Screening of Fragrance Materials for Allergenicity in the Guinea Pig.–1. Comparison of Four Testing Methods,'' *Journal of the Society of Cosmetic Chemists.* 28:53–64 (1977).

(5) Magnusson, B., Kligman, A.M. ''The Identification of Contact Allergens by Animal Assay,'' The Guinea Pig Maximization Test. *The Journal of Investigative Dermatology*. 52:268–276 (1973).

(6) Maguire, H.C. ''The Bioassay of Contact Allergens in the Guinea Pig'' *Journal of the Society of Cosmetic Chemists.* 24:151–162 (1973).

(7) Maurer, T., Thomann, P., Weirich, E.G., Hess, R. ''The Optimization Test in the Guinea Pig. A Method for the Predictive Evaluation of the Contact Allergenicity of Chemicals,'' *Agents and Actions.* (Basel: Birkhauser Verlag, 1975) Vol. 5/2.

(8) Maurer, T., Thomann, P., Weirich, E.G., Hess, R. ''The Optimization Test in the Guinea Pig: A Method for the Predictive Evaluation of the Contact Allergenicity of Chemicals,'' *International Congress Series Excerpta Medica No. 376,* (1975) Vol. 203.

§ 798.4350 Inhalation developmental toxicity study.

(a) *Purpose.* In the assessment and evaluation of the toxic characteristics of an inhalable material such as a gas, volatile substance, or aerosol/particulate, determination of the potential developmental toxicity is important. The inhalation developmental toxicity

study is designed to provide information on the potential hazard to the unborn which may arise from exposure of the mother during pregnancy.

(b) *Definitions.* (1) Developmental toxicity is the property of a chemical that causes in utero death, structural or functional abnormalities or growth retardation during the period of development.

(2) ''Aerodynamic diameter'' applies to the behavioral size of particles of aerosols. It is the diameter of a sphere of unit density which behaves aerodynamically like the particles of the test substance. It is used to compare particles of different sizes, shapes, and densities and to predict where in the respiratory tract such particles may be deposited. This term is used in contrast to ''optical,'' ''measured'' or ''geometric'' diameters which are representation of actual diameters which in themselves cannot be related to deposition within the respiratory tract.

(3) ''Geometric mean diameter'' or ''median diameter'' is the calculated aerodynamic diameter which divides the particles of an aerosol in half based on the weight of the particles. Fifty percent of the particles by weight will be larger than the median diameter and 50 percent of the particles will be smaller than the median diameter. The median diameter and its geometeric standard deviation are used to statistically describe the particle size distribution of any aerosol based on the weight and size of the particles.

(4) ''Inhalable diameter'' refers to that aerodynamic diameter of a particle which is considered to be inhalable for the organism. It is used to refer to particles which are capable of being inhaled and may be deposited anywhere within the respiratory tract from the trachea to the deep lung (the alveoli). For man, the inhalable diameter is considered here as 15 micrometers or less.

(5) ''Concentration'' refers to an exposure level. Exposure is expressed as weight or volume of test substance per volume of air (mg/1), or as parts per million (ppm).

(6) ''No-observed-effect level'' is the maximum concentration in a test which produces no observed adverse effects. A no-observed-effect level is expressed in terms of weight or volume of test substance given daily per unit volume of air.

(c) *Principle of the test method.* The test substance is administered in graduated concentrations, for at least that part of the pregnancy covering the major period of organogenesis, to several groups of pregnant experimental animals, one exposure level being used per group. Shortly before the expected date of delivery, the pregnant females are sacrificed, the uteri removed, and the contents examined for embryonic or fetal deaths, and live fetuses.

(d) *Limit test.* If a test at an exposure of 5 mg/1 (actual concentration of respirable substances) or, where this is not possible due to physical or chemical properties of the test substance, the maximum attainable concentration, produces no observable developmental toxicity, then a full study using three exposure levels might not be necessary.

(e) *Test procedures*—(1) *Animal selection*—(i) *Species and strain.* Testing shall be performed in at least two mamalian species. Commonly used species include the rat, mouse, rabbit, and hamster. If other mamalian species are used, the tester shall provide justification/reasoning for their selection. Commonly used laboratory strains shall be employed. The strain shall not have low fecundity and shall preferably be characterized for its sensitivity to developmental toxins.

(ii) *Age.* Young adult animals (nulliparous females) shall be used.

(iii) *Sex.* Pregnant female animals shall be used at each exposure level.

(iv) *Number of animals.* At least 20 pregnant rats, mice, or hamsters or 12 pregnant rabbits are required at each exposure level. The objective is to ensure that sufficient pups are produced to permit meaningful evaluation of the potential developmental toxicity of the test substance.

(2) *Control group.* A concurrent control group shall be used. This group shall be exposed to clean, filtered air under conditions identical to those used for the group exposed to the substance of interest. In addition, a vehicle-exposed group may be necessary

when the substance under study requires a vehicle for delivery. It is recommended that during preliminary range finding studies, air vs. vehicle exposure be compared. If there is no substantial difference, air exposure itself would be an appropriate control. If vehicle and air exposure yield different results, both vehicle and air exposed control groups are recommended.

(3) *Concentration levels and concentration selection*. (i) At least three concentration levels with a control and, where appropriate, a vehicle control, shall be used.

(ii) The vehicle shall neither be developmentally toxic nor have effects on reproduction.

(iii) To select the appropriate concentration levels, a pilot or trial study may be advisable. Since pregnant animals have an increased minute ventilation as compared to non-pregnant animals, it is recommended that the trial study be conducted in pregnant animals. Similarly, since presumably the minute ventilation will vary with progression of pregnancy, the animals should be exposed during the same period of gestation as in the main study. In the trial study, the concentration producing embryonic or fetal lethalities or maternal toxicity should be determined.

(iv) Unless limited by the physical/chemical nature or biological properties of the substance, the highest concentration level shall induce some overt maternal toxicity such as reduced body weight or body weight gain, but not more than 10 percent maternal deaths.

(v) The lowest concentration level should not produce any grossly observable evidence of either maternal or developmental toxicity.

(vi) Ideally, the intermediate concentration level(s) shall produce minimal observable toxic effects. If more than one intermediate concentration is used, the concentration levels shall be spaced to produce a gradation of toxic effects.

(4) *Exposure duration*. The duration of exposure shall be at least six hours daily allowing appropriate additional time for chamber equilibrium.

(5) *Observation period*. Day 0 in the test is the day on which a vaginal plug and/or sperm are observed. The exposure period shall cover the period of major organogenesis. This may be taken as days 6 to 15 for rat and mouse, 6 to 14 for hamster, or 6 to 18 for rabbit.

(6) *Inhalation exposure*. (i)(A) The animals shall be tested in inhalation equipment designed to sustain a minimum dynamic air flow of 12 to 15 air changes per hour and ensure an adequate oxygen content of 19 percent and an evenly distributed exposure atmosphere. Where a chamber is used, its design should minimize crowding of the test animals and maximize their exposure to the test substance. This is best accomplished by individual caging. To ensure stability of a chamber atmosphere, the total ''volume'' of the test animals shall not exceed 5 percent of the volume of the test chamber.

(B) Pregnant animals shall not be subjected to beyond the minimum amount of stress. Since whole-body exposure appears to be the least stressful mode of exposure, it is the method preferred. In general oro-nasal or head-only exposure, which is sometimes used to avoid concurrent exposure by the dermal or oral routes, is not recommended because of the associated stress accompanying the restraining of the animals. However, there may be specific instances where it may be more appropriate than whole-body exposure. The tester shall provide justification/reasoning for its selection.

(ii) A dynamic inhalation system with a suitable flow control system shall be used. The rate of air flow shall be adjusted to ensure that conditions throughout the exposure chamber are essentially the same. Test material distribution should be established before animals are committed to dosing. Maintenance of slight negative pressure inside the chamber will prevent leakage of the test substance into the surrounding areas.

(iii) The temperature at which the test is performed should be maintained at 22 °C (±2°) for rodents or 20 °C (±3°) for rabbits. Ideally, the relative humidity should be maintained between 40 to 60 percent, but in certain instances (e.g., tests of aerosols, use of water vehicle) this may not be practicable.

(7) *Physical measurements.* Measurements or monitoring should be made of the following:

(i) The rate of airflow shall be monitored continuously but shall be recorded at least every 30 minutes.

(ii) The actual concentration of the test substance shall be measured in the breathing zone. During the exposure period the actual concentrations of the test substance shall be held as constant as practicable, monitored continously or intermittently depending on the method of analysis and measured at least at the beginning, at an intermediate time and at the end of the exposure period.

(iii) During the development of the generating system, particle size analysis shall be performed to establish the stability of aerosol concentrations with respect to particle size. During exposure, analysis shall be conducted as often as necessary to determine the consistency of particle size distribution.

(iv) Temperature and humidity shall be monitored continuously and be recorded at least every 30 minutes.

(8) *Food and water during exposure period.* Food should be withheld during exposure. Water may or may not be withheld. If it is not withheld it should not come in direct contact with the test atmospheres.

(9) *Observation of animals.* (i) A gross examination shall be made at least once each day.

(ii) Additional observations should be made daily with appropriate actions taken to minimize loss of animals to the study (e.g., necropsy or refrigeration of animals found dead and isolation or sacrifice of weak or moribund animals).

(iii) Signs of toxicity shall be recorded as they are observed, including the time of onset, the degree and duration.

(iv) Cage-side observations shall include, but not be limited to: Changes in skin and fur, eye and mucous membranes, as well as respiratory, autonomic and central nervous systems, somatomotor activity and behavioral pattern. Particular attention should be directed to observation of tremors, convulsions, salivation, diarrhea, lethargy, sleep, and coma.

(v) Measurements should be made weekly of food consumption for all animals in the study.

(vi) Animals shall be weighed at least weekly.

(vii) Females showing signs of abortion or premature delivery shall be sacrificed and subjected to a thorough macroscopic examination.

(10) *Gross necropsy.* (i) At the time of sacrifice or death during the study, the dam shall be examined macroscopically for any structural abnormalities or pathological changes which may have influenced the pregnancy.

(ii) Immediately after sacrifice or death, the uterus shall be removed, weighed, and the contents examined for embryonic or fetal deaths and the number of viable fetuses. Gravid uterine weights should not be obtained from dead animals if autolysis or where decomposition has occurred. The degree of resorption shall be described in order to help estimate the relative time of death.

(iii) The number of corpora lutea shall be determined for all species except mice.

(iv) The sex of the fetuses shall be determined and they shall be weighed individually, the weights recorded, and the mean fetal weight derived.

(v) Following removal, each fetus shall be examined externally.

(vi) For rats, mice and hamsters, one-third to one-half of each litter shall be prepared and examined for skeletal anomalies, and the remaining part of each litter shall be prepared and examined for soft tissue anomalies using appropriate methods.

(vii) For rabbits, each fetus shall be examined by careful dissection for visceral anomalies and then examined for skeletal anomalies.

(f) *Data and reporting*—(1) *Treatment of results.* Data shall be summarized in tabular form, showing for each test group: the number of animals at the start of the test, the number of pregnant animals, the number and percentages of live fetuses and the number of fetuses with any soft tissue or skeletal abnormalities.

(2) *Evaluation of results.* The findings of a developmental toxicity study shall be evaluated in terms of the observed

effects and the exposure levels producing effects. It is necessary to consider the historical developmental toxicity data on the species/strain tested. A properly conducted developmental toxicity study should provide a satisfactory estimation of a no-effect level.

(3) *Test report.* In addition to the reporting requirements as specified under 40 CFR part 792, subpart J, the following specific information shall be reported:

(i) *Test conditions.* (A) Description of exposure apparatus including design, type, dimensions, source of air, system for generating particulates and aerosols, methods of conditioning air, and the method of housing the animals in a test chamber when this apparatus is used.

(B) The equipment for measuring temperature, humidity, and particulate aerosol concentrations and size shall be described.

(ii) *Exposure data.* These shall be tabulated and presented with mean values and a measure of variability (e.g., standard deviation) and shall include:

(A) Airflow rates through the inhalation equipment.

(B) Temperature of air.

(C) Nominal concentration—total amount of test substance fed into the inhalation equipment divided by volume of air (no standard deviation).

(D) Measured total concentrations (particulate and/or gaseous phases) in test breathing zone.

(E) Particle size distribution (e.g., median aerodynamic diameter of particles with geometric standard deviation) including estimates of the percents of inhalable and non-inhalable portions for the test animals.

(iii) *Animal data.* (A) Toxic response data by concentration.

(B) Species and strain.

(C) Date of death during the study or whether animals survived to termination.

(D) Date of onset and duration of each abnormal sign and its subsequent course.

(E) Feed, body weight and uterine weight data.

(F) Pregnancy and litter data.

(G) Fetal data (live/dead, sex, soft tissue and sketetal defects, resorptions).

(g) *References.* For additional background information on this test guideline the following references should be consulted:

(1) Department of Health and Welfare. *The Testing of Chemicals for Carcinogenicity, Mutagenicity and Teratogenicity.* Minister of Health and Welfare (Canada: Department of Health and Welfare, 1975).

(2) National Academy of Sciences. ''Principles and Procedures for Evaluating the Toxicity of Household Substances.'' A report prepared by the Committee for the Revision of NAS Publication 1138, under the auspices of the Committee on Toxicology, National Research Council, National Academy of Sciences, Washington, DC (1977).

(3) World Health Organization. *Principles for the Testing of Drugs for Teratogenicity.* WHO Technical Report Series No. 364. (Geneva: World Health Organization, 1967).

[50 FR 39397, Sept. 27, 1985, as amended at 52 FR 19076, May 20, 1987; 52 FR 26150, July 13, 1987; 54 FR 21064, May 16, 1989]

§ 798.4700 Reproduction and fertility effects.

(a) *Purpose.* This guideline for two-generation reproduction testing is designed to provide general information concerning the effects of a test substance on gonadal function, conception, parturition, and the growth and development of the offspring. The study may also provide information about the effects of the test substance on neonatal morbidity, mortality, and preliminary data on teratogenesis and serve as a guide for subsequent tests.

(b) *Principle of the test method.* The test substance is administered to parental (P) animals prior to their mating, during the resultant pregnancies, and through the weaning of their F_1 offspring. The substance is then administered to selected F_1 offspring during their growth into adulthood, mating, and production of an F_2 generation, up until the F_2 generation is weaned.

(c) *Test procedures*—(1) *Animal selection*—(i) *Species and strain.* The rat is the preferred species. If another mammalian species is used, the tester shall provide justification/reasoning for its selection. Strains with low fecundity shall not be used.

(ii) *Age.* Parental (P) animals shall be about 5 to 8 weeks old at the start of dosing.

(iii) *Sex.* (A) For an adequate assessment of fertility, both males and females shall be studied.

(B) The females shall be nulliparous and non-pregnant.

(iv) *Number of animals.* Each test and control group shall contain at least 20 males and a sufficient number of females to yield at least 20 pregnant females at or near term.

(2) *Control groups.* (i) A concurrent control group shall be used. This group shall be an untreated or sham treated control group or if a vehicle is used in administering the test substance, a vehicle control group.

(ii) If a vehicle is used in administering the test substance, the control group shall receive the vehicle in the highest volume used.

(iii) If a vehicle or other additive is used to facilitate dosing, it shall not interfere significantly with absorption of the test substance or produce toxic effects.

(3) *Dose levels and dose selection.* (i) At least three dose levels and a concurrent control shall be used.

(ii) The highest dose level should induce toxicity but not high levels of mortality in the parental (P) animals.

(iii) The lowest dose level should not produce any grossly observable evidence of toxicity.

(iv) Ideally the intermediate dose level(s) should produce minimal observable toxic effects. If more than one intermediate dose is used, dose levels should be spaced to produce a gradation of toxic effects.

(4) *Exposure conditions.* The animals should be dosed with the test substance, ideally, on a 7 days per week basis.

(i) Dosing, mating, delivery, and sacrifice schedule.

(A) Daily dosing of the parental (P) males and females shall begin when they are 5 to 8 weeks old. For both sexes, dosing shall be continued for at least 10 weeks before the mating period.

(B) Dosing of P males shall continue through the 3 week mating period. At the end of the mating period, P males may be sacrificed and examined, or may be retained for possible production of a second litter. If these animals are retained for a second litter, dosing shall be continued. Dosing of the F_1 males saved for mating shall continue from the time they are weaned through the period they are mated with the F_1 females (11 weeks). F_1 males may be sacrificed after the F_1 mating period.

(C) Daily dosing of the P females shall continue through the three week mating period, pregnancy, and to the weaning of the F_1 offspring. Dosing of the F_1 females saved for mating shall continue from the time they are weaned, through the period they are mated with the F_1 males (11 weeks from the time of weaning) pregnancy, and to the weaning of the F_2 offspring.

(ii) All animals are sacrificed as scheduled.

(A) All P males should be sacrificed at the end of the 3-week mating period, or may be retained for possible production of a second litter. If these animals are retained for a second litter, dosing shall be continued.

(B) F_1 males selected for mating should be sacrificed at the end of the three week period of the F_1 mating.

(C) F_1 males and females not selected for mating should be sacrified when weaned.

(D) The P females should be sacrificed upon weaning of their F_1 offspring.

(E) F_1 dams and their F_2 offspring are sacrificed when the offspring are weaned.

(5) *Administration of the test substance*—(i) *Oral studies.* (A) It is recommended that the test substance be administered in the diet or drinking water.

(B) If administered by gavage or capsule, the dosage administered to each animal prior to mating shall be based on the individual animal's body weight and adjusted weekly. During pregnancy the dosage shall be based on the body weight at day 0 and 6 of pregnancy.

(ii) If another route of administration is used, the tester should provide justification and reasoning for its selection.

(6) *Mating procedure*—(i) *Parental.* (A) For each mating, each female shall be placed with a single male from the same dose level until pregnancy occurs or 1 week has elapsed. If mating has not occurred after 1 week, the female shall be placed with a different male.

Paired matings should be clearly identified.

(B) Those pairs that fail to mate should be evaluated to determine the cause of the apparent infertility. This may involve such procedures as additional opportunities to mate with proven fertile males or females, histological examination of the reproductive organs, and examination of the estrus or spermatogenic cycles.

(C) Each day, the females shall be examined for presence of sperm or vaginal plugs. Day 0 of pregnancy is defined as the day vaginal plugs or sperm are found.

(ii) *F_1* cross. (A) For mating the F_1 offspring, one male and one female are randomly selected at weaning from each litter for cross mating with another pup of the same dose level but different litter, to produce the F_2 generation.

(B) F_1 males and females not selected for mating are sacrificed upon weaning.

(iii) *Special housing.* After evidence of copulation, pregnant animals shall be caged separately in delivery or maternity cages. Pregnant animals shall be provided with nesting materials when parturition is near.

(iv) *Standardization of litter sizes.* (A) On day 4 after birth, the size of each litter should be adjusted by eliminating extra pups by random selection to yield, as nearly as possible, 4 males and 4 females per litter.

(B) Whenever the number of male or female pups prevents having 4 of each sex per litter, partial adjustment (for example, 5 males and 3 females) is permitted. Adjustments are not appropriate for litters of less than 8 pups.

(C) Elimination of runts only is not appropriate.

(D) Adjustments of the F_2 litters is conducted in the same manner.

(7) *Observation of animals.* (i) A gross examination shall be made at least once each day. Pertinent behavioral changes, signs of difficult or prolonged parturition, and all signs of toxicity, including mortality, shall be recorded. These observations shall be reported for each individual animal. Food consumption for all animals shall be monitored weekly except during the mating period.

(ii) The duration of gestation shall be calculated from day 0 of pregnancy.

(iii) Each litter should be examined as soon as possible after delivery for the number of pups, stillbirths, live births, sex, and the presence of gross anomalies. Live pups should be counted and litters weighed at birth or soon thereafter, and on days 4, 7, 14, and 21 after parturition.

(iv) Physical or behavioral abnormalities observed in the dams of offspring shall be recorded.

(v) P males and females shall be weighed on the first day of dosing and weekly thereafter. F_1 litters shall be weighed at birth, or soon thereafter, and on days 4, 7, 14, and 21. In all cases, litter weights shall be calculated from the weights of the individual pups.

(8) *Gross necropsy.* (i) A complete gross examination shall be performed on all adult animals, including those which died during the experiment or were killed in moribund conditions.

(ii) Special attention shall be directed to the organs of the reproductive system.

(iii) The following organs and tissues, or representative samples thereof, shall be preserved in a suitable medium for possible future histopathological examination: Vagina; uterus; ovaries; testes; epididymides; seminal vesicles; prostate, pituitary gland; and, target organ(s) when previously identified of all P and F_1 animals selected for mating.

(9) *Histopathology.* Except if carried out in other studies of comparable duration and dose levels the following histopathology shall be performed:

(i) Full histopathology on the organs listed above for all high dose, and control P_1 and F_1 animals selected for mating.

(ii) Organs demonstrating pathology in these animals shall then be examined in animals from the other dose groups.

(iii) Microscopic examination shall be made of all tissues showing gross pathological changes.

(d) *Data and reporting*—(1) *Treatment of results.* Data shall be summarized in tabular form, showing for each test group the number of animals at the start of the test, the number of animals pregnant, the types of change and

the percentage of animals displaying each type of change.

(2) *Evaluation of study results.* (i) An evaluation of test results, including the statistical analysis, based on the clinical findings, the gross necropsy findings, and the microscopic results shall be made and supplied. This should include an evaluation of the relationship, or lack thereof, between the animals' exposure to the test substance and the incidence and severity of all abnormalities.

(ii) In any study which demonstrates an absence of toxic effects, further investigation to establish absorption and bioavailability of the test substance should be considered.

(3) *Test report.* In addition to the reporting requirements as specified under 40 CFR part 792, subpart J the following specific information shall be reported:

(i) Toxic response data by sex and dose, including fertility, gestation, viability and lactation indices, and length of gestation.

(ii) Species and strain.

(iii) Date of death during the study or whether animals survived to termination.

(iv) Toxic or other effects on reproduction, offspring, or postnatal growth.

(v) Date of observation of each abnormal sign and its subsequent course.

(vi) Body weight data for P, F_1, and F_2 animals.

(vii) Necropsy findings.

(viii) Detailed description of all histopathological findings.

(ix) Statistical treatment of results where appropriate.

(e) *References.* For additional background information on this test guideline the following references should be consulted:

(1) Clermont, Y., Perry, B. ''Quantitative Study of the Cell Population of the Seminiferous Tubules in Immature Rats,'' *American Journal of Anatomy*. 100:241–267 (1957).

(2) Goldenthal, E.I. *Guidelines for Reproduction Studies for Safety Evaluation of Drugs for Human Use.* Drug Review Branch, Division of Toxicological Evaluation, Bureau of Science, Food and Drug Administration, Washington, DC (1966).

(3) Hasegawa, T., Hayashi, M., Ebling, F.J.G., Henderson, I.W. *Fertility and Sterility*. (New York: American Elsevier Publishing Co., Inc., 1973).

(4) Oakberg, E.F. ''Duration of Spermatogenesis in the Mouse and Timing of Stages of the Cycle of the Seminiferous Epithelium,'' *American Journal of Anatomy*. 9:507–516 (1956).

(5) Roosen-Runge, E.C. ''The Process of Spermatogenesis in Mammals,'' *Biological Review*. 37:343–377 (1962).

[50 FR 39397, Sept. 27, 1985, as amended at 52 FR 19077, May 20, 1987]

§ 798.4900 Developmental toxicity study.

(a) *Purpose.* In the assessment and evaluation of the toxic characteristics of a chemical, determination of the potential developmental toxicity is important. The developmental toxicity study is designed to provide information on the potential hazard to the unborn which may arise from exposure of the mother during pregnancy.

(b) *Definitions.* (1) Developmental toxicity is the property of a chemical that causes in utero death, structural or functional abnormalities or growth retardation during the period of development.

(2) Dose is the amount of test substance administered. Dose is expressed as weight of test substance (g, mg) per unit weight of a test animal (e.g., mg/kg).

(3) No-observed-effect level is the maximum concentration in a test which produces no observed adverse effects. A no-observed-effect level is expressed in terms of weight of test substance given daily per unit weight of test animal (mg/kg)

(c) *Principle of the test method.* The test substance is administered in graduated doses for at least part of the pregnancy covering the major period of organogenesis, to several groups of pregnant experimental animals, one dose level being used per group. Shortly before the expected date of delivery, the pregnant females are sacrificed, the uteri removed, and the contents examined for embryonic or fetal deaths, and live fetuses.

(d) *Limit test.* If a test at an exposure of at least 1000 mg/kg body weight, using the procedures described for this study, produces no observable developmental toxicity, then a full study using three dose levels might not be necessary.

(e) *Test procedures*—(1) *Animal selection*—(i) *Species and strain.* Testing

shall be performed in at least 2 mammalian species. Commonly used species include the rat, mouse, rabbit, and hamster. If other mammalian species are used, the tester shall provide justification/reasoning for their selection. Commonly used laboratory strains shall be employed. The strain shall not have low fecundity and shall preferably be characterized for its sensitivity to developmental toxins.

(ii) *Age.* Young adult animals (nulliparous females) shall be used.

(iii) *Sex.* Pregnant female animals shall be used at each dose level.

(iv) *Number of animals.* At least 20 pregnant rats, mice or hamsters or 12 pregnant rabbits are required at each dose level. The objective is to ensure that sufficient pups are produced to permit meaningful evaluation of the potential developmental toxicity of the test substance.

(2) *Control group.* A concurrent control group shall be used. This group shall be an untreated or sham treated control group, or, if a vehicle is used in administering the test substance, a vehicle control group. Except for treatment with the test substance, animals in the control group(s) shall be handled in an identical manner to test group animals.

(3) *Dose levels and dose selection.* (i) At least 3 dose levels with a control and, where appropriate, a vehicle control, shall be used.

(ii) The vehicle shall neither be developmentally toxic nor have effects on reproduction.

(iii) To select the appropriate dose levels, a pilot or trial study may be advisable. It is not always necessary to carry out a trial study in pregnant animals. Comparison of the results from a trial study in non-pregnant, and the main study in pregnant animals will demonstrate if the test substance is more toxic in pregnant animals. If a trial study is carried out in pregnant animals, the dose producing embryonic or fetal lethalities or maternal toxicity shall be determined.

(iv) Unless limited by the physical/chemical nature or biological properties of the substance, the highest dose level shall induce some overt maternal toxicity such as reduced body weight or body weight gain, but not more than 10 percent maternal deaths.

(v) The lowest dose level should not produce any grossly observable evidence of either maternal or developmental toxicity.

(vi) Ideally, the intermediate dose level(s) should produce minimal observable toxic effects. If more than one intermediate concentration is used, the concentration levels should be spaced to produce a gradation of toxic effects.

(4) *Observation period.* Day 0 in the test is the day on which a vaginal plug and/or sperm are observed. The dose period shall cover the period of major organogenesis. This may be taken as days 6 to 15 for rat and mouse, 6 to 14 for hamster, or 6 to 18 for rabbit.

(5) *Administration of test substance.* The test substance or vehicle is usually administered orally, by oral intubation unless the chemical or physical characteristics of the test substance or pattern of human exposure suggest a more appropriate route of administration. The test substance shall be administered approximately the same time each day.

(6) *Exposure conditions.* The female test animals are treated with the test substance daily throughout the appropriate treatment period. When given by gavage, the dose may be based on the weight of the females at the start of substance administration, or, alternatively, in view of the rapid weight gain which takes place during pregnancy, the animals may be weighed periodically and the dosage based on the most recent weight determination.

(7) *Observation of animals.* (i) A gross examination shall be made at least once each day.

(ii) Additional observations shall be made daily with appropriate actions taken to minimize loss of animals to the study (e.g., necropsy or refrigeration of those animals found dead and isolation or sacrifice of weak or moribund animals).

(iii) Signs of toxicity shall be recorded as they are observed, including the time of onset, the degree and duration.

(iv) Cage-side observations shall include, but not be limited to: changes in

skin and fur, eye and mucous membranes, as well as respiratory, autonomic and central nervous systems, somatomotor activity and behavioral pattern.

(v) Measurements should be made weekly of food consumption for all animals in the study.

(vi) Animals shall be weighed at least weekly.

(vii) Females showing signs of abortion or premature delivery shall be sacrificed and subjected to a thorough macroscopic examination.

(8) *Gross necropsy*. (i) At the time of sacrifice or death during the study, the dam shall be examined macroscopically for any structural abnormalities or pathological changes which may have influenced the pregnancy.

(ii) Immediately after sacrifice or as soon as possible after death, the uterus shall be removed and the contents examined for embryonic or fetal deaths and the number of viable fetuses. The degree of resorption shall be described in order to help estimate the relative time of death of the conceptus. The weight of the gravid uterus should be recorded for dams that are sacrificed. Gravid uterine weights should not be obtained from dead animals if autolysis or decomposition has occurred.

(iii) The number of corpora lutea shall be determined for all species except mice.

(iv) The sex of the fetuses shall be determined and they shall be weighed individually, the weights recorded, and the mean fetal weight derived.

(v) Following removal, each fetus shall be examined externally.

(vi) For rats, mice and hamsters, one-third to one-half of each litter shall be prepared and examined for skeletal anomalies, and the remaining part of each litter shall be prepared and examined for soft tissue anomalies using appropriate methods.

(vii) For rabbits, each fetus shall be examined by careful dissection for visceral anomalies and then examined for skeletal anomalies.

(f) *Data and reporting*—(1) *Treatment of results*. Data shall be summarized in tablular form, showing for each test group: the number of animals at the start of the test, the number of pregnant animals, the number and percentages of live fetuses and the number of fetuses with any soft tissue or skeletal abnormalities.

(2) *Evaluation of results*. The findings of a developmental toxicity study shall be evaluated in terms of the observed effects and the exposure levels producing effects. It is necessary to consider the historical developmental toxicity data on the species/strain tested. A properly conducted developmental toxicity study should provide a satisfactory estimation of a no-effect level.

(3) *Test report*. In addition to the reporting requirements as specified under 40 CFR part 792, subpart J the following specific information shall be reported:

(i) Toxic response data by concentration.

(ii) Species and strain.

(iii) Date of death during the study or whether animals survived to termination.

(iv) Date of onset and duration of each abnormal sign and its subsequent course.

(v) Food, body weight and uterine weight data.

(vi) Pregnancy and litter data.

(vii) Fetal data (live/dead, sex, soft tissue and skeletal defects, resorptions).

(g) *References*. For additional background information on this test guideline the following references should be consulted:

(1) Department of Health and Welfare. *The Testing of Chemicals for Carcinogenicity, mutagenicity and Teratogenicity*. Minister of Health and Welfare (Canada: Department of Health and Welfare, 1975).

(2) National Academy of Sciences. ''Principles and Procedures for Evaluating the Toxicity of Household Substances.'' A report prepared by the Committee for the Revision of NAS Publication 1138, under the auspices of the Committee on Toxicology, National Research Council, National Academy of Sciences, Washington, DC (1977).

(3) World Health Organization. *Principles for the Testing of Drugs for Teratogenicity*. WHO Technical Report Series No. 364. (Geneva: World Health Organization, (1967).

[50 FR 39397, Sept. 27, 1985, as amended at 52 FR 19077, May 20, 1987]

Subpart F—Genetic Toxicity

§ 798.5195 Mouse biochemical specific locus test.

(a) *Purpose.* The mouse biochemical specific locus test (MBSL) may be used to detect and quantitate mutations originating in the germ line of a mammalian species.

(b) *Definitions.* (1) A biochemical specific locus mutation is a genetic change resulting from a DNA lesion causing alterations in proteins that can be detected by electrophoretic methods.

(2) The germ line is comprised of the cells in the gonads of higher eukaryotes, which are the carriers of the genetic information for the species.

(c) *Reference substances.* Not applicable.

(d) *Test method*—(1) *Principle.* The principle of the MBSL is that heritable damage to the genome can be detected by electrophoretic analysis of proteins in the tissues of the progeny of mice treated with germ cell mutagens.

(2) *Description.* For technical reasons, males rather than females are generally treated with the test chemical. Treated males are then mated to untreated females to produce F1 progeny. Both blood and kidney samples are taken from progeny for electrophoretic analysis. Up to 33 loci can be examined by starch-gel electrophoresis and broad-range isoelectric focussing. Mutants are identified by variations from the normal electrophoretic pattern. Presumed mutants are bred to confirm the genetic nature of the change.

(3) *Animal selection*—(i) *Species and strain.* Mice shall be used as the test species. Although the biochemical specific locus test could be performed in a number of in bred strains, in the most frequently used cross, C57BL/6 females are mated to DBA/2 males to produce (C57BL/6×DBA/2) F1 progeny for screening.

(ii) *Age.* Healthy, sexually-mature (at least 8 weeks old) animals shall be used for treatment and breeding.

(iii) *Number.* A decision on the minimum number of treated animals should take into account possible effects of the test chemical on the fertility of the treated animals. Other considerations should include:

(A) The production of concurrent spontaneous controls.

(B) The use of positive controls.

(C) The power of the test.

(4) *Control groups*—(i) *Concurrent controls.* An appropriate number of concurrent control loci shall be analyzed in each experiment. These should be partly derived from matings of untreated animals (from 5 to 20 percent ofthe treated matings), although some data on control loci can be taken from the study of the alleles transmitted from the untreated parent in the experimental cross. However, any laboratory which has had no prior experience with the test shall produce a spontaneous control sample of about 5,000 progeny animals and a positive control (using 100 mg/kg ethylnitrosourea) sample of at least 1,200 offspring.

(ii) *Historical controls.* Long-term, accumulated spontaneous control data (currently, 1 mutation in 1,200,000 control loci screened) are available for comparative purposes.

(5) *Test chemicals*—(i) *Vehicle.* When possible, test chemicals shall be dissolved or suspended in distilled water or buffered isotonic saline. Water-insoluble chemicals shall be dissolved or suspended in appropriate vehicles. The vehicle used shall neither interfere with the test chemical nor produce major toxic effects. Fresh preparations of the test chemical should be employed.

(ii) *Dose levels.* Usually, only one dose need be tested. This should be the maximum tolerated dose (MTD), the highest dose tolerated without toxic effects. Any temporary sterility induced due to elimination of spermatogonia at this dose must be of only moderate duration, as determined by are turn of males to fertility within 80 days after treatment. For evaluation of dose-response, it is recommended that at least two dose levels be tested.

(iii) *Route of administration.* Acceptable routes of administration include, but are not limited to, gavage, inhalation, and mixture with food or water, and intraperitoneal or intravenous injections.

(e) *Test performance*—(1) *Treatment and mating.* Male DBA/2 mice shall be treated with the test chemical and

mated to virgin C57BL/6 females immediately after cessation of treatment. Each treated male shall be mated to new virgin C57BL/6 females each week. Each pairing will continue for a week until the next week's mating is to begin. This mating schedule permits sampling of all post-spermatogonial stages of germ-cell development during the first 7 weeks after exposure. Spermatogonial stem cells are studied thereafter. Repeated mating cycles should be conducted until sufficient offspring have been obtained to meet the power criterion of the assay for spermatogonial stem cells.

(2) *Examination of offspring*—(i) *Birth and weaning.* Offspring shall be examined at birth and at weaning for externally detectable changes in morphology and behavior; these could be due to dominant mutations. Such characteristics may include, but are not limited to, variations in coat color, appearance of eyes, size (in which case weighing of variant animals and littermates should be carried out), fur texture, etc. Gross changes in external form and behavior shall also be sought. Scrutiny of such visible characteristics of all animals shall be made during all subsequent manipulations of the animals.

(ii) *Tissue sampling.* Blood (about 0.1 mL) and one kidney shall be removed from progeny mice under anesthesia. Both tissues are then prepared for analysis by electrophoresis.

(iii) *Electrophoresis.* The gene products of 6 loci shall be analyzed in the blood sample by broad-range isoelectric focussing and of 27 loci in the kidney sample by starch-gel electrophoresis and enzyme-specific staining. Details on these procedures are included in paragraphs (g)(1) through (g)(3) of this section.

(iv) *Mutant identification.* Presumptive electrophoretic mutants shall be identified by variation from the normal electrophoretic banding patterns. Reruns of all variant samples shall be performed to confirm the presence of altered banding patterns. Samples from parents of progeny exhibiting banding pattern variations shall be assayed to determine whether the variant was induced by the experimental treatment or was pre-existing. All treatment-induced variants are bred to determine the genetic nature of the change.

(f) *Data and reports*—(1) *Treatment of results.* Data shall be presented in tabular form and shall permit independent analysis of cell stage-specific effects, and dose-dependent phenomena. The data shall be recorded and analyzed in such a way that clusters of identical mutations are clearly identified. The individual mutants detected shall be thoroughly described. In addition, concurrent positive control data (if employed) and spontaneous control data shall also be tabulated. These concurrent controls shall be added to, as well as compared with, the historical control data.

(2) *Statistical evaluation.* Data shall be evaluated by appropriate statistical methods.

(3) *Interpretation of results.* (i) There are several criteria for determining a positive response, one of which is a statistically significant dose-related increase in the frequency of electrophoretic mutations. Another criterion may be based upon detection of a reproducible and statistically significant positive response for at least one of these test points.

(ii) A test chemical which does not produce a statistically significant increase in the frequency of electrophoretic mutations over the spontaneous frequency, or a statistically significant and reproducible positive response for at least one of the test points, is considered nonmutagenic in this system, provided that the sample size is sufficient to exclude a biologically significant increase in mutation frequency.

(iii) Both biological and statistical significance should be considered together in the evaluation.

(4) *Test evaluation.* (i) Positive results in the MBSL indicate that, under the test conditions, the test chemical induces heritable gene mutations in a mammalian species.

(ii) Negative results indicate that, under the test conditions, the test chemical does not induce heritable genemutations in a mammalian species.

(5) *Test report.* In addition to the reporting requirements as specified under

40 CFR part 792, subpart J, and paragraph (h) of this section, the following specific information shall be reported:

(i) Strain, age and weight of animals used; numbers of animals of each sex in experimental and control groups.

(ii) Test chemical vehicle, doses used, rationale for dose selection, and toxicity data, if available.

(iii) Route and duration of exposure.

(iv) Mating schedule.

(v) Number of loci screened for both treated and spontaneous data.

(vi) Criteria for scoring mutants.

(vii) Number of mutants found/locus.

(viii) Loci at which mutations were found.

(ix) Use of concurrent negative and positive controls.

(x) Dose-response relationship, if applicable.

(g) *References.* For additional background information on this test guideline, the following references should be consulted:

(1) Personal communication from Susan E. Lewis, Ph.D. to Dr. Michael Cimino, U.S. EPA, OPPT, October 5, 1989.

(2) Johnson, F.M., G.T. Roberts, R.K. Sharma, F.Chasalow, R. Zweidinger, A. Morgan, R.W. Hendren, and S.E.Lewis. ''The detection of mutants in mice by electrophoresis: Results of a model induction experiment with procarbazine.'' *Genetics* 97:113–124 (1981).

(3) Johnson, F.M. and S.E. Lewis. ''Mutation rate determinations based on electrophoretic analysis of laboratory mice.'' *Mutation Research* 82:125–135 (1981a).

(4) Johnson, F.M. and S.E. Lewis. ''Electrophoretically detected germinal mutations induced by ethylnitrosourea in the mouse.'' *Proceedings of the National Academy of Sciences* 78:3138–93141 (1981b).

(5) Lewis, S.E., C. Felton, L.B. Barnett, W. Generoso, N. Cacheiro, and M.D. Shelby. ''Dominant visible and electrophoretically expressed mutations induced in male mice exposed to ethylene oxide by inhalation.'' *Environmental Mutagenesis* 8:867–872 (1986).

(h) *Additional requirements.* Testing facilities conducting the mouse biochemical specific locus test in accordance with this section shall, in addition to adhering to the provisions of §§ 792.190 and 792.195 of this chapter, obtain, adequately identify, and retain for at least 10 years, acceptable 35–mm photographs (and their negatives) of the stained isoelectric-focussing columns and the stained starch-gels obtained following analyses of blood and kidney preparations, respectively, from mutant mice, their siblings, and their parents.

[55 FR 12641, Apr. 5, 1990]

§ 798.5200 Mouse visible specific locus test.

(a) *Purpose.* The mouse visible specific locus test (MSLT) may be used to detect and quantitate mutations in the germ line of a mammalian species.

(b) *Definitions.* (1) A visible specific locus mutation is a genetic change that alters factors responsible for coat color and other visible characteristics of certain mouse strains.

(2) The germ line is the cells in the gonads of higher eukaryotes which are the carriers of the genetic information for the species.

(c) *Reference substances.* Not applicable.

(d) *Test method*—(1) *Principle.* (i) The principle of the MSLT is to cross individuals who differ with respect to the genes present at certain specific loci, so that a genetic alteration involving the standard gene at any one of these loci will produce an offspring detectably different from the standard heterozygote. The genetic change may be detectable by various means, depending on the loci chosen to be marked.

(ii) Three variations of the method currently exist for detecting newly arising point mutations in mouse germ cells:

(A) The visible specific locus test using either 5 or 7 loci.

(B) The biochemical specific locus test using up to 20 enzymes.

(C) The test for mutations at histocompatibility loci.

(iii) Of the three tests, the visible specific locus test has been most widely used in assessing genetic hazard due to environmental agents. It is the method described in this guideline.

(2) *Description.* For technical reasons, males rather than females are generally treated with the test agent. Treated males are then mated to females which are genetically homozygous for certain specific visible marker loci. Offspring are examined in the next generation for evidence that a new mutation has arisen.

(3) *Animal selection*—(i) *Species and strain.* Mice shall be used as the test species. Male mice shall be either $(C_3H\times101)F_1$ or $(101\times C_3H)F_1$ hybrids. Females shall be T stock virgins.

(ii) *Age.* Healthy sexually mature animals shall be used.

(iii) *Number.* A decision on the minimum number of treated animals should take into account the spontaneous variation of the biological characterization being evaluated. Other considerations should include:

(A) The use of either historical or concurrent controls.

(B) The power of the test.

(C) The minimal rate of induction required.

(D) The use of positive controls.

(E) The level of significance desired.

(iv) *Assignment to groups.* Animals shall be randomized and assigned to treatment and control groups.

(4) *Control groups*—(i) *Concurrent controls.* The use of positive or spontaneous controls is left to the discretion of the investigator. However, any laboratory which has had no prior experience with the test shall, at its first attempt, produce a negative control sample of 20,000 and a positive control, using 100 mg/kg 1-ethyl-nitrosourea, in a sample of 5,000 offspring.

(ii) *Historical controls.* Long term, accumulated spontaneous control data of 43/801,406 are available for comparative purposes.

(5) *Test chemicals*—(i) *Vehicle.* When possible, test chemicals should be dissolved or suspended in distilled water or isotonic saline buffered appropriately, if needed, for stability. Water-insoluble chemicals shall be dissolved or suspended in appropriate vehicles. The vehicle used shall neither interfere with the test compound nor produce major toxic effects. Fresh preparations of the test chemical should be employed.

(ii) *Dose levels.* Usually, only one dose level need be tested. This should be the highest dose tolerated without toxic effects, provided that any temporary sterility induced due to elimination of spermatagonia is of only moderate duration, as determined by a return of males to fertility within 80 days after treatment. For evaluation of dose-response, it is recommended that at least two dose levels be tested.

(iii) *Route of administration.* Acceptable routes of administration include gavage, inhalation, admixture with food or water, and IP or IV injections.

(e) *Test performance*—(1) *Treatment and mating.* Hybrid F_1 (C_3 H×101 or 101×C_3 H) male mice shall be treated with the test substance and immediately mated to virgin T stock females. Each treated male shall be mated to a fresh group of 2 to 4 virgin females each week for 7 weeks, after which he shall be returned to the first group of females and rotated through the seven sets of females repeatedly. This mating schedule generally permits sampling of all postspermatagonial stages of germ cell development during the first 7 weeks and rapid accumulation of data for exposed spermatagonial stem cells thereafter. Repeated mating cycles should be conducted until the entire spermatogonial cycle has been evaluated and enough offspring have been obtained to meet the power criterion of the assay.

(2) *Examination of offspring.* (i) Offspring may be examined at (or soon after) birth but must be examined at about 3 weeks of age at which time the numbers of mutant and nonmutant offspring in each litter shall be recorded.

(ii) Nonmutant progeny should be discarded. Mutant progeny shall be subjected to genetic tests for verification.

(f) *Data and report*—(1) *Treatment of results.* Data shall be presented in tabular form and shall permit independent analysis of cell stage specific effects and dose dependent phenomena. The data shall be recorded and analyzed in such a way that clusters of identical mutations are clearly identified. The individual mutants detected shall be thoroughly described. In addition, concurrent positive and negative control data, if they are available, shall be tabulated so that it is possible to differentiate between concurrent (when available) and long-term accumulated mutation frequencies.

(2) *Statistical evaluation.* Data shall be evaluated by appropriate statistical methods.

(3) *Interpretation of results.* (i) There are several criteria for determining a

positive result, one of which is a statistically significant dose-related increase in the number of specific locus mutations. Another criterion may be based upon detection of a reproducible and statistically significant positive response for at least one of the test points.

(ii) A test substance which does not produce either a statistically significant dose-related increase in the number of specific locus mutations or a statistically significant and reproducible positive response at any one of the test points is considered nonmutagenic in this system.

(iii) Both biological and statistical significance should be considered together in the evaluation.

(4) *Test evaluation.* (i) Positive results in the MSLT indicate that under the test conditions the test substance induces heritable gene mutations in the test species.

(ii) Negative results indicate that under the test conditions the test substance does not induce heritable gene mutations in the test species.

(5) *Test report.* In addition to the reporting requirements as specified under 40 CFR part 792, subpart J, and paragraph (h) of this section, the following specific information shall be reported:

(i) Strain, age and weight of animals used, number of animals of each sex in experimental and control groups.

(ii) Test chemical vehicle, doses used and rationale for dose selection, toxicity data.

(iii) Route and duration of exposure.

(iv) Mating schedule.

(v) Time of examination for mutant progeny.

(vi) Criteria for scoring mutants.

(vii) Use of concurrent or negative controls.

(viii) Dose response relationship, if applicable.

(g) *References.* For additional background information on this test guideline the following references should be consulted:

(1) Russell, L.B., Shelby, P.B., von Halle, E., Sheridan, W., Valcovic, L. The mouse specific locus test with agents other than radiations: interpretation of data and recommendations for future work: A report of the U.S. EPA's Gene-Tox Program,'' *Mutation Research,* 86:329–354 (1981).

(2) [Reserved]

(h) *Additional requirements.* Testing facilities conducting the mouse visible specific locus test in accordance with this section shall, in addition to adhering to the provisions of §§ 792.190 and 792.195 of this chapter, obtain, and retain for at least 10 years, acceptable 35–mm color photographs (and their negatives) demonstrating the visible mutations observed in mutant animals and the lack of such mutations in their siblings and parents.

[50 FR 39397, Sept. 27, 1985, as amended at 52 FR 19078, May 20, 1987; 55 FR 12643, Apr. 5, 1990]

§ 798.5265 The salmonella typhimurium reverse mutation assay.

(a) *Purpose.* The *Salmonella typhimurium* histidine (his) reversion system is a microbial assay which measures $his^- \rightarrow his^=$ reversion induced by chemicals which cause base changes or frameshift mutations in the genome of this organism.

(b) *Definitions.* (1) A reverse mutation assay in *Salmonella typhimurium* detects mutation in a gene of a histidine requiring strain to produce a histidine independent strain of this organism.

(2) Base pair mutagens are agents which cause a base change in the DNA. In a reversion assay, this change may occur at the site of the original mutation or at a second site in the chromosome.

(3) Frameshift mutagens are agents which cause the addition or deletion of single or multiple base pairs in the DNA molecule.

(c) *Reference substances.* These may include, but need not be limited to, sodium azide, 2-nitrofluorene, 9-aminoacridine, 2-aminoanthracene, congo red, benzopurpurin 4B, trypan blue or direct blue 1.

(d) *Test method*—(1) *Principle.* Bacteria are exposed to test chemical with and without a metabolic activation system and plated onto minimal medium. After a suitable period of incubation, revertant colonies are counted and compared to the number of spontaneous revertants in an untreated and/or vehicle control culture.

(2) *Description.* Several methods for performing the test have been described. Among those used are:

(i) The direct plate incorporation method.

(ii) The preincubation method.

(iii) The azo-reduction method.

The procedures described here are for the direct plate incorporation method and the azo-reduction method.

(3) *Strain selection*—(i) *Designation.* At the present time four strains, TA 1535, TA 1537, TA 98 and TA 100 should be used. The use of other strains in addition to these four is left to the discretion of the investigator.

(ii) *Preparation and storage.* Recognized methods of stock culture preparation and storage should be used. The requirement of histidine for growth should be demonstrated for each strain. Other phenotypic characteristics should be checked using such methods as crystal violet sensitivity and resistance to ampicillin. Spontaneous reversion frequency should be in the range expected either as reported in the literature or as established in the laboratory by historical control values.

(iii) *Bacterial growth.* Fresh cultures of bacteria should be grown up to the late exponential or early stationary phase of growth (approximately 10^8-10^9 cells per ml).

(4) *Metabolic activation.* Bacteria should be exposed to the test substance both in the presence and absence of an appropriate metabolic activation system. For the direct plate incorporation method, the most commonly used system is a cofactor supplemented postmitochondrial fraction prepared from the livers of rodents treated with enzyme inducing agents such as Aroclor 1254. For the azo-reduction method, a cofactor supplemented postmitochondrial fraction prepared from the livers of untreated hamsters is preferred. For this method, the cofactor supplement should contain flavin mononucleotide, exogenous glucose 6-phosphate dehydrogenase, NADH and excess of glucose-6-phosphate.

(5) *Control groups*—(i) *Concurrent controls.* Concurrent positive and negative (untreated and/or vehicle) controls shall be included in each experiment. Positive controls shall ensure both strain responsiveness and efficacy of the metabolic activation system.

(ii) *Strain specific positive controls.* Strain specific positive controls shall be included in the assay. Examples of strain specific positive controls are as follows:

(A) Strain TA 1535, TA 100, sodium azide.

(B) TA 98, 2-nitrofluorene.

(C) TA 1537, 9-aminoacridine.

(iii) *Positive controls to ensure the efficacy of the activation system.* The positive control reference substance for tests including a metabolic activation system should be selected on the basis of the type of activation system used in the test. 2-Aminoanthracene is an example of a positive control compound in plate-incorporation tests using postmitochondrial fractions from the livers of rodents treated with enzyme inducing agents such as Aroclor-1254. Congo red is an example of a positive control compound in the azo-reduction method. Other positive control reference substances may be used.

(iv) *Class-specific positive controls.* The azo-reduction method should include positive controls from the same class of compounds as the test agent wherever possible.

(6) *Test chemicals*—(i) *Vehicle.* Test chemicals and positive control reference substances should be dissolved or suspended in an appropriate vehicle and then further diluted in vehicle for use in the assay.

(ii) *Exposure concentrations.* (A) The test should initially be performed over a broad range of concentrations. Among the criteria to be taken into consideration for determining the upper limits of test chemical concentration are cytotoxicity and solubility. Cytotoxicity of the test chemical may be altered in the presence of metabolic activation systems. Toxicity may be evidenced by a reduction in the number of spontaneous revertants, a clearing of the background lawn or by the degree of survival of treated cultures. Relatively insoluble compounds should be tested up to the limits of solubility. For freely soluble nontoxic chemicals, the upper test chemical concentration should be determined on a case by case basis.

(B) Generally, a maximum of 5 mg/plate for pure substances is considered acceptable. At least 5 different amounts of test substance shall be

tested with adequate intervals between test points.

(C) When appropriate, a single positive response shall be confirmed by testing over a narrow range of concentrations.

(e) *Test performance*—(1) *Direct plate incorporation method.* For this test without metabolic activation, test chemica1 and 0.1 m1 of a fresh bacterial culture should be added to 2.0 ml of overlay agar. For tests with metabolic activation, 0.5 ml of activation mixture containing an adequate amount of postmitochondrial fraction should be added to the agar overlay after the addition of test chemical and bacteria. Contents of each tube shall be mixed and poured over the surface of a selective agar plate. Overlay agar shall be allowed to solidify before incubation. At the end of the incubation period, revertant colonies per plate shall be counted.

(2) *Azo-reduction method.* (i) For this test with metabolic activation, 0.5 ml of S–9 mix containing 150 ul of S–9 and 0.1 ml of bacterial culture should be added to a test tube kept on ice. One-tenth milliliter of chemical should be added, and the tubes should be incubated with shaking at 30 °C for 30 min. At the end of the incubation period, 2.0 ml of agar should be added to each tube, the contents mixed and poured over the surface of a selective agar plate. Overlay agar shall be allowed to solidify before incubation. At the end of the incubation period, revertant colonies per plate shall be counted.

(ii) For tests without metabolic activation, 0.5 ml of buffer should be used in place of the 0.5 ml of S–9 mix. All other procedures shall be the same as those used for the test with metabolic activation.

(3) *Other methods.* Other methods may also be appropriate.

(4) *Media.* An appropriate selective medium with an adequate overlay agar shall be used.

(5) *Incubation conditions.* All plates within a given experiment shall be incubated for the same time period. This incubation period shall be for 48–72 hours at 37 °C.

(6) *Number of cultures.* All plating should be done at least in triplicate.

(f) *Data and report*—(1) *Treatment of results.* Data shall be presented as number of revertant colonies per plate for each replicate and dose. The numbers of revertant colonies on both negative (untreated and/or vehicle) and positive control plates shall also be presented. Individual plate counts, the mean number of revertant colonies per plate and standard deviation shall be presented for test chemical and positive and negative (untreated and/or vehicle) controls.

(2) *Statistical evaluation.* Data should be evaluated by appropriate statistical methods.

(3) *Interpretation of results.* (i) There are several criteria for determining a positive result, one of which is a statistically significant dose-related increase in the number of revertants. Another criterion may be based upon detection of a reproducible and statistically significant positive response for at least one of the test substance concentrations.

(ii) A test substance which does not produce either a statistically significant dose-related increase in the number of revertants or a statistically significant and reproducible positive response at any one of the test points is considered nonmutagenic in this system.

(iii) Both biological and statistical significance should be considered together in the evaluation.

(4) *Test evaluation.* (i) Positive results from the *S. typhimurium* reverse mutation assay indicate that, under the test conditions, the test substance induces point mutations by base changes or frameshifts in the genome of this organism.

(ii) Negative results indicate that under the test conditions the test substance is not mutagenic in *S. typhimurium.*

(5) *Test report.* In addition to the reporting recommendations as specified under 40 CFR part 792, subpart J, the following specific information shall be reported:

(i) Bacterial strain used.

(ii) Metabolic activation system used (source, amount and cofactor); details of preparations of S–9 mix.

(iii) Dose levels and rationale for selection of dose.

(iv) Positive and negative controls.

(v) Individual plate counts, mean number of revertant colonies per plate, standard deviation.

(vi) Dose-response relationship, if applicable.

(g) *References.* For additional background information on this test guideline the following references should be consulted:

(1) Ames, B.N., McCann, J., Yamasaki, E. ''Methods for detecting carcinogens and mutagens with the *Salmonella/* mammalian-microsome mutagenicity test,'' *Mutation Research* 31:347–364 (1975).

(2) de Serres, F.J., Shelby, M.D. ''The *Salmonella* mutagenicity assay: recommendations,'' *Science* 203:563–565 (1979).

(3) Prival, M.J., Mitchell, V.D. ''Analysis of a method for testing azo dyes for mutagenic activity in *Salmonella typhimurium* in the presence of flavin mononucleotide and hamster liver S–9,'' *Mutation Research* 97:103–116 (1982).

(4) Vogel, H.J., Bonner, D.M. ''Acetylornithinase of *E. coli:* partial purification and some properties,'' *Journal of Biological Chemistry*. 218:97–106 (1956).

[50 FR 39397, Sept. 27, 1985, as amended at 52 FR 19078, May 20, 1987]

§ 798.5275 Sex-linked recessive lethal test in drosophila melanogaster.

(a) *Purpose.* The sex-linked recessive lethal (SLRL) test using *Drosophila melanogaster* detects the occurrence of mutations, both point mutations and small deletions, in the germ line of the insect. This test is a forward mutation assay capable of screening for mutations at about 800 loci on the X-chromosome. This represents about 80 percent of all X-chromosome loci. The X-chromosome represents approximately one-fifth of the entire haploid genome.

(b) *Definitions.* (1) Lethal mutation is a change in the genome which, when expressed, causes death to the carrier.

(2) Recessive mutation is a change in the genome which is expressed in the homozygous or hemizygous condition.

(3) Sex-Linked genes are present on the sex (X or Y) chromosomes. Sex-linked genes in the context of this guideline refer only to those located on the X-chromosome.

(c) *Reference substances.* These may include, but need not be limited to, ethyl methanesulfonate or N-nitroso-dimethylamine.

(d) *Test method*—(1) *Principle.* Mutations in the X-chromosome of *D. melanogaster* are phenotypically expressed in males carrying the mutant gene. When the mutation is lethal in the hemizygous condition, its presence is inferred from the absence of one class of male offspring out of the two that are normally produced by a heterozygous female. The SLRL test takes advantage of these facts by means of specially marked and arranged chromosomes.

(2) *Description.* Wild-type males are treated and mated to appropriate females. Female offspring are mated individually to their brothers, and in the next generation the progeny from each separate dose are scored for phenotypically wild-type males. Absence of these males indicates that a sex-linked recessive lethal mutation has occurred in a germ cell of the P_1 male.

(3) *Drosophila stocks.* Males of a well-defined wild type stock and females of the Muller-5 stock may be used. Other appropriately marked female stocks with multiple inverted X-chromosomes may also be used.

(4) *Control groups*—(i) *Concurrent controls.* Concurrent positive and negative (vehicle) controls shall be included in each experiment.

(ii) *Positive controls.* Examples of positive controls include ethyl methanesulfonate and N-nitroso-dimethylamine.

(iii) *Other positive controls.* Other positive control reference substances may be used.

(iv) *Negative controls.* Negative (vehicle) controls shall be included. The size of the negative (vehicle) control group shall be determined by the availability of appropriate laboratory historical control data.

(5) *Test chemicals*—(i) *Vehicle.* Test chemicals should be dissolved in water. Compounds which are insoluble in water may be dissolved or suspended in appropriate vehicles (e.g., a mixture of ethanol and Tween-60 or 80) and then diluted in water or saline prior to administration. Dimethylsulfoxide should br avoided as a vehicle.

(ii) *Dose levels.* For the initial assessment of mutagenicity, it is sufficient to test a single dose of the test substance for screening purposes. This

dose should be the maximum tolerated dose, or that which produces some indication of toxicity, or shall be the highest dose attainable. For dose-response purposes, at least three additional dose levels should be used.

(iii) *Route of administration.* Exposure may be oral, by injection or by exposure to gases or vapors. Feeding of the test compound may be done in sugar solution. When necessary, substances may be dissolved in 0.7 percent NaCl solution and injected into the thorax or abdomen.

(e) *Test performance*—(1) *Treatment and mating.* Wild-type males (3 to 5 days old) shall be treated with the test substance and mated individually to an appropriate number of virgin females from the Muller-5 stock or females from another appropriately marked (with multiply-inverted X-chromosomes) stock. The females shall be replaced with fresh virgins every 2 to 3 days to cover the entire germ cell cycle. The offspring of these females are scored for lethal effects corresponding to the effects on mature sperm, mid or late stage spermatids, early spermatids, spermatocytes and spermatogonia at the time of treatment.

(2) *$F_1$1 matings.* Heterozygous F_1 females from the above crosses shall be allowed to mate individually (i.e., one female per vial) with their brothers. In the F_2 generation, each culture shall be scored for the absence of wild-type males. If a culture appears to have arisen from an F_1 female carrying a lethal in the parental X-chromosome (i.e., no males with the treated chromosome are observed), daughters of that female with the same genotype shall be tested to ascertain if the lethality is repeated in the next generation.

(3) *Number of matings.* (i) The test should be designed with a predetermined sensitivity and power. The number of flies in each group should reflect these defined parameters. The spontaneous mutant frequency observed in the appropriate control group will strongly influence the number of treated chromosomes that must be analysed to detect substances which show mutation rates close to those of the controls.

(ii) Test results should be confirmed in a separate experiment.

(f) *Data and report*—(1) *Treatment of results.* Data shall be tabulated to show the number of chromosomes tested, the number of nonfertile males and the number of lethal chromosomes at each exposure concentration and for each mating period for each male treated. Numbers of clusters of different size per male shall be reported.

(2) *Statistical evaluation.* Data shall be evaluated by appropriate statistical techniques.

(3) *Interpretation of results.* (i) There are several criteria for determining a positive result, one of which is a statistically significant dose-related increase in the number of sex-lined recessive lethals. Another criterion may be based upon detection of a reproducible and statistically significant positive response for at least one of the test points.

(ii) A test substance which does not produce either a statistically significant dose-related increase in the number of sex-linked recessive lethals or a statistically significant and reproducible positive response at any one of the test points is considered non-mutagenic in this system.

(iii) Both biological and statistical significance should be considered together in the evaluation.

(4) *Test evaluation.* (i) Positive results in the SLRL test in *D. melanogaster* indicate that under the test conditions the test agent causes mutations in germ cells of this insect.

(ii) Negative results indicate that under the test conditions the test substance is not mutagenic in *D. melanogaster.*

(5) *Test report.* In addition to the reporting recommendations as specified under 40 CFR part 792, subpart J the following specific information shall be reported.

(i) *Drosophila* stock used in the assay, age of insects, number of males treated, number of sterile males, number of F_2 cultures established, number of F_2 cultures without progeny.

(ii) Test chemical vehicle, treatment and sampling schedule, exposure levels, toxicity data, negative (vehicle) and positive controls, if appropriate.

(iii) Criteria for scoring lethals.

(iv) Number of chromosomes tested, number of chromosomes scored, number of chromosomes carrying a lethal mutation.

(v) Historical control data, if available.

(vi) Dose-response relationship, if applicable.

(g) *References.* For additional background information on this test guideline the following references should be consulted:

(1) Sobels, F.H., Vogel, E. ''The capacity of *Drosophila* for detecting relevant genetic damage,'' *Mutation Research* 41:95–106 (1976).

(2) Wurgler F.E., Sobels F.H., Vogel E. ''*Drosophila* as assay system for detecting genetic changes,'' *Handbook of mutagenicity test procedures.* Eds. Kilbey, B.J., Legator, M., Nichols, W., Ramel, C., (Amsterdam: Elsevier/North Holland Biomedical Press, 1977) pp. 335–373.

[50 FR 39397, Sept. 27, 1985, as amended at 52 FR 19079, May 20, 1987]

§ 798.5300 Detection of gene mutations in somatic cells in culture.

(a) *Purpose.* Mammalian cell culture systems may be used to detect mutations induced by chemical substances. Widely used cell lines include L5178Y mouse lymphoma cells and the CHO and V–79 lines of Chinese hamster cells. In these cell lines the most commonly used systems measure mutation at the thymidine kinase (TK), hypoxanthine-guanine-phosphoribosyl transferase (HPRT) and $Na^{=}/K^{=}$ ATPase loci. The TK and HPRT mutational systems detect base pair mutations, frameshift mutations, and small deletions; the $Na^{=}/K^{=}$ ATPase system detects base pair mutations only.

(b) *Definitions.* (1) A forward mutation assay detects a gene mutation from the parental type to the mutant form which gives rise to a change in an enzymatic or functional protein.

(2) Base pair mutagens are agents which cause a base change in the DNA.

(3) Frameshift mutagens are agents which cause the addition or deletion of single or multiple base pairs in the DNA molecule.

(4) Phenotypic expression time is a period during which unaltered gene products are depleted from newly mutated cells.

(c) *Reference substances.* These may include, but need not be limited to, ethyl methanesulfonate, N-nitroso-dimethylamine, 2-acetylaminofluorene, 7,12-dimethylbenzanthracene or hycanthone.

(d) *Test method*—(1) *Principle.* Cells are exposed to test substance, both with and without metabolic activation, for a suitable period of time and subcultured to determine cytotoxicity and to allow phenotypic expression prior to mutant selection. Cells deficient in thymidine kinase (TK) due to the forward mutation $TK^{=} \rightarrow TK^{-}$ are resistant to the cytotoxic effects of pyrimidine analogues such as bromodeoxyuridine (BrdU), fluorodeoxyuridine (FdU) or trifluorothymidine (TFT). The deficiency of the ''salvage'' enzyme thymidine kinase means that these antimetabolites are not incorporated into cellular nucleotides and the nucleotides needed for cellular metabolism are obtained solely from *de novo* synthesis. However, in the presence of thymidine kinase, BrdU, FdU or TFT are incorporated into the nucleotides, resulting in inhibition of cellular metabolism and cytotoxicity. Thus mutant cells are able to proliferate in the presence of BrdU, FdU or TFT whereas normal cells, which contain thymidine kinase, are not. Similarly cells deficient in HPRT are selected by resistance to 8-azaguanine (AG) or 6-thioguanine (TG) and cells with altered $Na^{=}/K^{=}$ ATPase are selected by resistance to ouabain.

(2) *Description.* Cells in suspension or monolayer culture are exposed to the test substance, both with and without metabolic activation, for a defined period of time. Cytotoxicity is determined by measuring the colony forming ability or growth rate of the cultures after the treatment period. The treated cultures are maintained in growth medium for a sufficient period of time—characteristic of each selected locus—to allow near-optimal phenotypic expression of induced mutations. Mutant frequency is determined by seeding known numbers of cells in medium containing the selective agent to detect mutant cells, and in medium without selective agent to determine the cloning efficiency. After a suitable incubation time, cell colonies are counted. The number of mutant colonies in selective medium is

adjusted by the number of colonies in nonselective medium to derive the mutant frequency.

(3) *Cells*—(i) *Type of cells used in the assay*. A variety of cell lines are available for use in this assay including subclones of L5178Y, CHO cells or V–79 cells. Cell types used in this assay should have a demonstrated sensitivity to chemical mutagens, a high cloning efficiency and a low spontaneous mutation frequency. Cells should be checked for *Mycoplasma* contamination and may be periodically checked for karyotype stability.

(ii) *Cell growth and maintenance.* Appropriate culture media and incubation conditions (culture vessels, CO_2 concentrations, temperature and humidity) shall be used.

(4) *Metabolic activation*. Cells shall be exposed to test substance both in the presence and absence of an appropriate metabolic activation system.

(5) *Control groups.* Positive and negative (untreated and/or vehicle) controls shall be included in each experiment. When metabolic activation is used, the positive control substance shall be known to require such activation.

(6) *Test chemicals*—(i) *Vehicle.* Test substances may be prepared in culture media or dissolved or suspended in appropriate vehicles prior to treatment of the cells. The final concentration of the vehicle shall not interfere with cell viability or growth rate. Treatment vessels should be chosen to ensure that there is no visible interaction, such as etching, between the solvent, the test chemical, and the vessel.

(ii) *Exposure concentrations.* (A) The test should be designed to have a predetermined sensitivity and power. The number of cells, cultures, and concentrations of test substance used should reflect these defined parameters. The number of cells per culture is based on the expected background mutant frequency; a general guide is to use a number which is 10 times the inverse of this frequency.

(B) Several concentrations (usually at least 4) of the test substance shall be used. Generally, these shall yield a concentration-related toxic effect. The highest concentration shall produce a low level of survival (approximately 10 percent), and the survival in the lowest concentration shall approximate the negative control. Cytotoxicity shall be determined after treatment with the test substance both in the presence and in the absence of an exogenous metabolic activation system. Relatively insoluble substances should be tested up to their limit of solubility under culture conditions. For freely-soluble nontoxic substances the highest concentration used should be determined on a case-by-case basis.

(e) *Test performance.* (1) Cells shall be exposed to the test substance both with and without exogenous metabolic activation. Exposure shall be for a suitable period of time, in most cases 1 to 5 hours is effective; exposure time may be extended over one or more cell cycles.

(2) At the end of the exposure period, cells shall be washed and cultured to determine viability and to allow for expression of the mutant phenotype.

(3) At the end of the expression period, which shall be sufficient to allow near optimal phenotypic expression of induced mutants, cells should be grown in medium with and without selective agent(s) for determination of number of mutants and cloning efficiency, respectively.

(4) Results shall be confirmed in an independent experiment. When appropriate, a single positive response should be confirmed by testing over a narrow range of concentrations.

(f) *Data and report*—(1) *Treatment of results.* Data shall be presented in tabular form. Individual colony counts for the treated and control groups shall be presented for both mutation induction and survival. Survival and cloning efficiencies shall be given as a percentage of the controls. Mutant frequency shall be expressed as number of mutants per number of surviving cells.

(2) *Statistical evaluation*. Data should be evaluated by appropriate statistical methods.

(3) *Interpretation of results.* (i) There are several criteria for determining a positive result, one of which is a statistically significant concentration-related increase in the mutant frequency. Another criterion may be based upon detection of a reproducible and statistically significant positive response for

at least one of the test substance concentrations.

(ii) A test substance which does not produce either a statistically significant concentration-related increase in the mutant frequency or a statistically significant and reproducible positive response at any one of the test points is considered nonmutagenic in this system.

(iii) Both biological and statistical significance should be considered together in the evaluation.

(4) *Test evaluation.* (i) Positive results for an in vitro mammalian cell gene mutation test indicate that, under the test conditions, a substance induces gene mutations in the cultured mammalian cells used.

(ii) Negative results indicate that, under the test conditions, the test substance does not induce gene mutations in the cultured mammalian cells used.

(5) *Test report.* In addition to the reporting recommendations as specified under 40 CFR part 792, subpart J the following specific information shall be reported:

(i) Cell type used, number of cell cultures, methods used for maintenance of cell cultures.

(ii) Rationale for selection of concentrations and number of cultures.

(iii) Test conditions: composition of media, CO_2 concentration, concentration of test substance, vehicle, incubation temperature, incubation time, duration of treatment, cell density during treatment, type of metabolic activation system, positive and negative controls, length of expression period (including number of cells seeded and subculture and feeding schedules, if appropriate), selective agent(s).

(iv) Methods used to enumerate numbers of viable and mutant cells.

(v) Dose-response relationship, where possible.

(g) *References.* For additional background information on this test guideline the following references should be consulted:

(1) Amacher, D.E., Paillet, S.C., Ray, V. ''Point mutations at the thymidine kinase locus in L5178Y mouse lymphoma cells. I. Application to genetic toxicology testing,'' *Mutation Research*, 64:391–406 (1979).

(2) Amacher, D.E., Paillet, S.C., Turner, G.N., Ray, V.A. Salsburg, V.A. ''Point mutations at the thymidine kinase locus in L5178Y mouse lymphoma cells. II. Test validation and interpretation,'' *Mutation Research*, 72:447–474 (1980).

(3) Bradley, M.O., Bhuyan B., Francis, M.C., Langenback, R., Peterson, A., Huberman, E. ''Mutagenesis by chemical agents in V–79 Chinese hamster cells: a review and analysis of the literature: a report of the Gene-Tox Program,'' *Mutation Research*, 87:81–142 (1981).

(4) Clive, D., Johnson, K.O., Spector, J.F.S., Batson, A.G., Brown, M.M. ''Validation and characterization of the L5178Y TK=/− mouse lymphoma mutagen assay system,'' *Mutation Research*, 59:61–108 (1979).

(5) Clive, D., Spector, J.F.S. ''Laboratory procedures for assessing specific locus mutations at the TK locus in cultured L5178Y mouse lymphoma cells,'' *Mutation Research*, 31:17–29 (1975).

(6) Hsie, A.W., Casciano, D.A., Couch, D.B., Krahn, D.F., O'Neill, J.P., Whitfield, B.L. ''The use of Chinese hamster ovary cells to quantify specific locus mutation and to determine mutagenicity of chemicals: a report of the U.S. EPA's Gene-Tox Program,'' *Mutation Research*, 86:193–214 (1981).

[50 FR 39397, Sept. 27, 1985, as amended at 52 FR 19079, May 20, 1987]

§ 798.5375 In vitro mammalian cytogenetics.

(a) *Purpose.* The in vitro cytogenetics test is a mutagenicity test system for the detection of chromosomal aberrations in cultured mammalian cells. Chromosomal aberrations may be either structural or numerical. However, because cytogenetic assays are usually designed to analyse cells at their first post-treatment mitosis and numerical aberrations require at least one cell division to be visualized, this type of aberration is generally not observed in a routine cytogenetics assay. Structural aberrations may be of two types, chromosome or chromatid.

(b) *Definitions.* (1) Chromosome-type aberrations are changes which result from damage expressed in both sister chromatids at the same time.

(2) Chromatid-type aberrations are damage expressed as breakage of single chromatids or breakage and/or reunion between chromatids.

(c) *Reference substances.* Not applicable.

(d) *Test method*—(1) *Principle.* In vitro cytogenetics assays may employ cultures of established cell lines, cell strains or primary cell cultures. Cell

cultures are exposed to the test substance both with and without metabolic activation. Following exposure of cell cultures to test substances, they are treated with a spindle inhibitor (e.g., colchicine or Colcemid#) to arrest cells in a metaphase-like stage of mitosis (c-metaphase). Cells are then harvested and chromosome preparations made. Preparations are stained and metaphase cells are analyzed for chromosomal aberrations.

(2) *Description.* Cell cultures are exposed to test compounds and harvested at various intervals after treatment. Prior to harvesting, cells are treated with a spindle inhibitor (e.g., colchicine or Colcemid#) to accumulate cells in c-metaphase. Chromosome preparations from cells are made, stained and scored for chromosomal aberrations.

(3) *Cells*—(i) *Type of cells used in the assay.* There are a variety of cell lines or primary cell cultures, including human cells, which may be used in the assay. Established cell lines and strains should be checked for *Mycoplasma* contamination and may be periodically checked for karyotype stability.

(ii) *Cell growth and maintenance.* Appropriate culture media, and incubation conditions (culture vessels CO_2 concentrations, temperature and humidity) shall be used.

(4) *Metabolic activation.* Cells shall be exposed to test substance both in the presence and absence of an appropriate metabolic activation system.

(5) *Control groups.* Positive and negative (untreated and/or vehicle) controls both with and without metabolic activation shall be included in each experiment. When metabolic activation is used, the positive control substance shall be known to require such activation.

(6) *Test chemicals*—(i) *Vehicle.* Test substances may be prepared in culture media or dissolved or suspended in appropriate vehicles prior to treatment of the cells. Final concentration of the vehicle shall not interfere with cell viability or growth rate. Treatment vessels should be chosen to ensure that there is no visible interaction, such as etching, between the solvent, the test chemical, and the vessel.

(ii) *Exposure concentrations.* Multiple concentrations of the test substance over a range adequate to define the response should be tested. Generally the highest test substance concentrations tested with and without metabolic activation should show evidence of cytotoxicity or reduced mitotic activity. Relatively insoluble substances should be tested up to the limit of solubility. For freely soluble nontoxic chemicals, the upper test chemical concentration should be determined on a case by case basis.

(e) *Test performance*—(1) *Established cell lines and strains.* Prior to use in the assay, cells should be generated from stock cultures, seeded in culture vessels at the appropriate density and incubated at 37 °C.

(2) *Human lymphocyte cultures.* Heparinized or acid-citrate-dextrose whole blood should be added to culture medium containing a mitogen, e.g., phytohemagglutinin (PHA) and incubated at 37 °C. White cells sedimented by gravity (buffy coat) or lymphocytes which have been purified on a density gradient may also be utilized.

(3) *Treatment with test substance.* For established cell lines and strains, cells in the exponential phase of growth shall be treated with test substances in the presence and absence of an exogenous metabolic activation system. Mitogen-stimulated human lymphocyte cultures may be treated with the test substance in a similar manner.

(4) *Number of cultures.* At least two independent cultures shall be used for each experimental point.

(5) *Culture harvest time.* (i) For established cell lines and strains, multiple harvest times are recommended. However, for screening purposes, a single harvest time may be appropriate. If the test chemical changes the cell cycle length, the fixation intervals should be changed accordingly. If a single harvest time is selected, supporting data for the harvest time should be presented in such a study.

(ii) For human lymphocyte cultures, the substance to be tested may be added to the cultures at various times after mitogen stimulation so that there is a single harvest time after the initiation of the cell culture. Alternatively, a single treatment may be

followed by multiple harvest times. Harvest time should be extended for those chemicals which induce an apparent cell cycle delay. Because the population of human lymphocytes is only partially synchronized, a single treatment, at, or close to, the time when metaphase stages first appear in the culture will include cells in all phases of the division cycle. Therefore, a single harvest at the time of second mitosis may be carried out for screening purposes.

(iii) Cell cultures shall be treated with a spindle inhibitor, (e.g., colchicine or Colcemid®), 1 or 2 hours prior to harvesting. Each culture shall be harvested and processed separately for the preparation of chromosomes.

(6) *Chromosome preparation.* Chromosome preparation involves hypotonic treatment of the cells, fixation and staining.

(7) *Analysis.* Slides shall be coded before analysis. In human lymphocytes, only cells containing 46 centromeres shall be analyzed. In established cell lines and strains, only metaphases containing ±2 centromeres of the modal number shall be analyzed. Uniform criteria for scoring aberrations shall be used.

(8) *Confirmatory tests.* When appropriate, a single positive response shall be confirmed by testing over a narrow range of concentrations.

(f) *Data and report*—(1) *Treatment of results.* Data shall be presented in a tabular form. Different types of structural chromosomal aberrations shall be listed with their numbers and frequencies for experimental and control groups. Data should be evaluated by appropriate statistical methods. Gaps or achromatic lesions are recorded separately and not included in the total aberration frequency.

(2) *Statistical evaluation.* Data should be evaluated by appropriate statistical methods.

(3) *Interpretation of results.* (i) There are several criteria for determining a positive result, one of which is a statistically significant dose-related increase in the number of structural chromosomal aberrations. Another criterion may be based upon detection of a reproducible and statistically significant positive response for at least one of the test substance concentrations.

(ii) A test substance which does not produce either a statistically significant dose-related increase in the number of structural chromosomal aberrations or a statistically significant and reproducible positive response at any one of the test points is considered nonmutagenic in this system.

(iii) Both biological and statistical significance should be considered together in the evaluation.

(4) *Test evaluation.* (i) Positive results in the in vitro cytogenetics assay indicate that under the test conditions the test substance induces chromosomal aberrations in cultured mammalian somatic cells.

(ii) Negative results indicate that under the test conditions the test substance does not induce chromosomal aberrations in cultured mammalian somatic cells.

(5) *Test report.* In addition to the reporting recommendations as specified under 40 CFR part 792, subpart J the following specific information shall be reported:

(i) Cells used, density and passage number at time of treatment, number of cell cultures.

(ii) Methods used for maintenance of cell cultures including medium, temperature and CO_2 concentration.

(iii) Test chemical vehicle, concentration and rationale for the selection of the concentrations used in the assay, duration of treatment.

(iv) Details of both the protocol used to prepare the metabolic activation system and of its use in the assay.

(v) Identity of spindle inhibitor, its concentration and duration of treatment.

(vi) Date of cell harvest.

(vii) Positive and negative controls.

(viii) Methods used for preparation of slides for microscopic examination.

(ix) Number of metaphases analysed.

(x) Mitotic index where applicable.

(xi) Criteria for scoring aberrations.

(xii) Type and number of aberrations, given separately for each treated and control culture, total number of aberrations per group; frequency distribution of number of chromosomes in established cell lines and strains.

(xiii) Dose-response relationship, if applicable.

(g) *References.* For additional background information on this test guideline the following references should be consulted.

(1) Ames, B.N., McCann, J., Yamasaki, E. ''Methods for detecting carcinogens and mutagens with the *Salmonella/* mammalian-microsome mutagenicity test,'' *Mutation Research,* 31:347–364 (1975).

(2) Evans, H.J. ''Cytological methods for detecting chemical mutagens,'' *Chemical mutagens, principles and methods for their detection,* Vol. 4, Ed. A. Hollaender (New York, London: Plenum Press, 1976) pp. 1–29.

(3) Howard, P.N., Bloom, A.D., Krooth, R.S. ''Chromosomal aberrations induced by N-methyl-N′-nitro-N-nitrosoguanidine in mammalian cells,'' *In Vitro* 7:359–365 (1972).

(4) Ishidate, M. Jr., Odashima, S. ''Chromosome tests with 134 compounds on Chinese hamster cells in vitro: A screening for chemical carcinogens,'' *Mutation Research,* 48:337–354 (1975).

(5) Preston, R.J., Au, W., Bender, M.A., Brewen, J.G., Carrano, A.V., Heddle, J.A., McFee, A.F., Wolff, S., Wassom, J.S., ''Mammalian in vivo and in vitro cytogenetic assays: A report of the Gene-tox Program,'' *Mutation Research,* 87:143–188 (1981).

[50 FR 39397, Sept. 27, 1985, as amended at 52 FR 19079, May 20, 1987]

§ 798.5385 In vivo mammalian bone marrow cytogenetics tests: Chromosomal analysis.

(a) *Purpose.* The *in vivo* bone marrow cytogenetic test is a mutagenicity test for the detection of structural chromosomal aberrations. Chromosomal aberrations are generally evaluated in first post-treatment mitoses. With the majority of chemical mutagens, induced aberrations are of the chromatid type but chromosome type aberrations also occur.

(b) *Definitions.* (1) Chromosome-type aberrations are changes which result from damage expressed in both sister chromatids at the same time.

(2) Chromatid-type aberrations are damage expressed as breakage of single chromatids or breakage and/or reunion between chromatids.

(c) *Reference substances.* Not applicable.

(d) *Test method*—(1) *Principle.* Animals are exposed to test chemicals by appropriate routes and are sacrificed at sequential intervals. Chromosome preparations are made from bone marrow cells. The stained preparations are examined and metaphase cells are scored for chromosomal aberrations.

(2) *Description.* The method employs bone marrow of laboratory rodents which have been exposed to test chemicals. Prior to sacrifice, animals are further treated with a spindle inhibitor, (e.g., colchicine or Colcemid®) to arrest the cells in c-metaphase. Chromosome preparations from the cells are stained and scored for chromosomal aberrations.

(3) *Animal selection*—(i) *Species and strain.* Any appropriate mammalian species may be used. Examples of commonly used rodent species are rats, mice, and hamsters.

(ii) *Age.* Healthy young adult animals shall be used.

(iii) *Number and sex.* At least five female and five male animals per experimental and control group shall be used. Thus, 10 animals would be sacrificed per time per group treated with the test compound if several test times after treatment are included in the experimental schedule. The use of a single sex or smaller number of animals should be justified.

(iv) *Assignment to groups.* Animals shall be randomized and assigned to treatment and control groups.

(4) *Control groups*—(1) *Concurrent controls.* (i) Concurrent positive and negative (vehicle) controls shall be included in the assay.

(ii) *Positive controls.* A single dose positive control showing a significant response at any one time point is adequate. A compound known to produce chromosomal aberrations in vivo shall be employed as the positive control.

(5) *Test chemicals*—(i) *Vehicle.* When possible, test chemicals shall be dissolved in isotonic saline or distilled water. Water insoluble chemicals may be dissolved or suspended in appropriate vehicles. The vehicles used shall neither interfere with the test chemical nor produce toxic effects. Fresh preparations of the test compound should be employed.

(ii) *Dose levels.* For an initial assessment, one dose of the test substance may be used, the dose being the maximum tolerated dose (to a maximum of 5,000 mg/kg) or that producing some indication of cytotoxicity (e.g., partial

inhibition of mitosis) or shall be the highest dose attainable (to a maximum of 5,000 mg/kg). Additional dose levels may be used. For determination of dose-response, at least three dose levels should be used.

(iii) *Route of administration.* The usual routes are oral or by intraperitoneal injection. Other routes may be appropriate.

(iv) *Treatment schedule.* In general, test substances should be administered once only. However, based on toxicological information a repeated treatment schedule may be employed.

(e) *Test performance*—(1) *Generally the test may be performed in two assays.* (i) Animals should be treated with the test substance once at the selected dose(s). Samples should be taken at three times after treatment. For rodents, the central sampling interval is 24 hours. Since cell cycle kinetics can be influenced by the test substance, one earlier and one later sampling interval adequately spaced within the range of 6 to 48 hours shall be applied. Where the additional dose levels are tested in a subsequent experiment, samples shall be taken at the predetermined most sensitive interval or, if this is not established, at the central sampling time. If the most sensitive interval is known and documented with data, only this one time point shall be sampled.

(ii) If a repeated treatment schedule is used at the selected dose(s), samples shall be taken 6 and 24 hours after the last treatment; other sampling times may be used if justified. Where the additional dose levels are tested in a subsequent experiment, samples shall be taken at the predetermined most sensitive interval or, if this is not established, at 6 hours after the last treatment.

(2) *Administration of spindle inhibitor.* Prior to sacrifice, animals shall be injected IP with an appropriate dose of a spindle inhibitor (e.g., colchicine or Colcemid®) to arrest cells in c-metaphase.

(3) *Preparation of slides.* Immediately after sacrifice, the bone marrow shall be obtained, exposed to hypotonic solution, and fixed. The cells shall then be spread on slides and stained. Chromosome preparations shall be made following standard procedures.

(4) *Analysis.* The number of cells to be analyzed per animal should be based upon the number of animals used, the negative control frequency, the predetermined sensitivity, and the power chosen for the test. Slides shall be coded before microscopic analysis.

(f) *Data and report*—(1) *Treatment of results.* Data should be presented in tabular form for both cells and animals. Different types of structural chromosomal aberrations should be listed with their numbers and a mean frequency per cell for each animal in all treated and control groups. Gaps (achromatic lesions) should be recorded separately and not included in the total abberration frequency. Differences among animals within each group should be considered before making comparisons between treated and control groups.

(2) *Statistical evaluation.* Data should be evaluated by appropriate statistical methods.

(3) *Interpretation of results.* (i) There are several criteria for determining a positive result, one of which is a statistically significant dose-related increase in the number of structual chromosomal aberrations or abnormal metaphase figures. Another criterion may be based upon detection of a reproducible and statistically significant positive response for a least one of the test points.

(ii) A test substance which does not produce either a statistically significant dose-related increase in the number of chromosomal aberrations or abnormal metaphase figures or a statistically significant and reproducible positive response at any one of the test points is considered nonmutagenic in this system.

(iii) Both biological and statistical significance should be considered together in the evaluation.

(4) *Test evaluation.* (i) Positive results in the *in vivo* bone marrow cytogenetics assay indicate that under the test conditions the test substance induces chromosomal aberrations in the bone marrow of the test species.

(ii) Negative results indicate that under the test conditions, the test substance does not induce chromosomal

aberrations in the bone marrow of the test species.

(5) *Test report.* In addition to the reporting recommendations as specified under 40 CFR part 792, subpart J the following specific information shall be reported:

(i) Species, strain, age, weight, number and sex of animals in each treatment and control group.

(ii) Test chemical vehicle, dose levels used, rationale for dose selection.

(iii) Route of administration, treatment and sampling schedules, toxicity data, negative and positive controls.

(iv) Identity of spindle-inhibitor, its concentration and duration of treatment.

(v) Details of the protocol used for chromosome preparation, number of cells scored per animal, type and number of aberrations given separately for each treated and control animal.

(vi) Mitotic index, where applicable.

(vii) Criteria for scoring aberrations.

(viii) Number and frequency of aberrant cells per animal in each treatment and control groups.

(ix) Total number of aberrations per group.

(x) Number of cells with aberrations per group.

(xi) Dose-response relationship, if applicable.

(g) *References.* For additional background information on this test guideline the following references should be consulted:

(1) Adler, I.D., Ramarao, G., Epstein, S.S. ''In vivo cytogenetic effects of trimethylphosphate and of TEPA on bone marrow cells of male rats,'' *Mutation Research,* 13:263–273 (1971).

(2) Evans, H.J. ''Cytological methods for detecting chemical mutagens,'' *Chemical Mutagens: Principles and Methods for Their Detection,* Vol. 4. Ed. A. Hollaender (New York and London: Plenum Press, 1976) pp. 1–29.

(3) Kilian, J.D., Moreland, F.E. Benge, M.C., Legator, M.S., Whorton, E.B. Jr. ''A collaborative study to measure intralaboratory variation with the in vivo bone morrow metaphase procedure,'' *Handbook of mutagenicity test procedures.* Eds. Kilby, B.J., Legator, M. Nichols, C., Ramel, D., (Amsterdam: Elsevier/North Holland Biomedical Press, 1977) 243–260.

(4) Preston, J.R., Au, W., Bender, M.A., Brewen, J.G., Carrano, A.V. Heddle, J.A., McFee, A.F., Wolff, S., Wassom, J. ''Mammalian in vivo and vitro cytogenetics assays: Report of the Gene-Tox Program,'' *Mutation Research, 87:143–188 (1981).*

[50 FR 39397, Sept. 27, 1985, as amended at 52 FR 19080, May 20, 1987]

§ 798.5395 In vivo mammalian bone marrow cytogenetics tests: Micronucleus assay.

(a) *Purpose.* The micronucleus test is a mammalian *in vivo* test which detects damage of the chromosomes or mitotic apparatus by chemicals. Polychromatic erythrocytes in the bone marrow of rodents are used in this assay. When the erythroblast develops into an erythrocyte the main nucleus is extruded and may leave a micronucleus in the cytoplasm. The visualization of micronuclei is facilitated in these cells because they lack a nucleus. Micronuclei form under normal conditions. The assay is based on an increase in the frequency of micronucleated polychromatic erythrocytes in bone marrow of treated animals.

(b) *Definition.* Micronuclei are small particles consisting of acentric fragments of chromosomes or entire chromosomes, which lag behind at anaphase of cell division. After telophase, these fragments may not be included in the nuclei of daughter cells and form single or multiple micronuclei in the cytoplasm.

(c) *Reference substances.* Not applicable.

(d) *Test method*—(1) *Principle.* (i) Animals are exposed to test substance by an appropriate route. They are sacrificed, the bone marrow extracted and smear preparations made and stained. Polychromatic erythrocytes are scored for micronuclei under the microscope.

(ii) Micronuclei may also be detected in other test systems:

(A) Tissue culture.

(B) Plants.

(C) Blood smears.

(D) Fetal tissues.

(E) Meiotic cells.

(F) Hepatic cells.

(iii) The present guideline is based on the mammalian bone marrow assay.

(2) *Description.* The method employs bone marrow of laboratory mammals which are exposed to test substances.

(3) *Animal selection*—(i) *Species and strain.* Mice are recommended. However, any appropriate mammalian species may be used.

(ii) *Age.* Young adult animals shall be used.

(iii) *Number and sex.* At least five female and five male animals per experimental and control group shall be used. Thus, 10 animals would be sacrificed per time per group if several test times after treatment were included in the experimental schedule. The use of a single sex or a smaller number of animals should be justified.

(iv) *Assignment to groups.* Animals shall be randomized and assigned to treatment and control groups.

(4) *Control groups*—(i) *Concurrent controls.* Concurrent positive and negative (vehicle) controls shall be included in each assay.

(ii) *Positive controls.* A compound known to produce micronuclei *in vivo* shall be employed as the positive control.

(5) *Test chemicals*—(i) *Vehicle.* When appropriate for the route of administration, solid and liquid test substances should be dissolved or suspended in distilled water or isotonic saline. Water insoluble chemicals may be dissolved or suspended in appropriate vehicles. The vehicle used shall neither interfere with the test compound nor produce toxic effects. Fresh preparations of the test compound should be employed.

(ii) *Dose levels.* For an initial assessment, one dose of the test substance may be used, the dose being the maximum tolerated dose (to a maximum of 5,000 mg/kg) or that producing some indication of cytotoxicity, e.g., a change in the ratio of polychromatic to normochromatic erythrocytes. Additional dose levels may be used. For determination of dose response, at least three dose levels shall be used.

(iii) *Route of administration.* The usual routes of administration are IP or oral. Other routes may be appropriate.

(iv) *Treatment schedule.* Test substances should generally be administered only once. However, based upon toxicological information a repeated treatment schedule may be employed.

(e) *Test performance*—(1) *Treatment and sampling times.* (i) Animals shall be treated with the test substance once at the highest tolerated dose. Sampling times should coincide with the maximum responses of the assay which varies with the test substance. Therefore, using the highest dose, bone marrow samples should be taken at least three times, starting not earlier than 12 hours after treatment, with appropriate intervals following the first sample but not extending beyond 72 hours. When other doses are used sampling shall be at the maximum sensitive period, or, if that is not known, approximately 24 hours after treatment. Other appropriate sampling times may be used in addition. If the most sensitive interval is known and documented with data, only this one time point need be sampled.

(ii) If a repeated treatment schedule is used, samples shall be taken at least three times, starting not earlier than 12 hours after the last treatment and at appropriate intervals following the first sample, but not extending beyond 72 hours.

(iii) Bone marrow shall be obtained immediately after sacrifice. Cells shall be prepared, put on slides, spread as a smear and stained.

(2) *Analysis.* Slides shall be coded before microscopic analysis. At least 1,000 polychromatic erythrocytes per animal shall be scored for the incidence of micronuclei. The ratio of polychromatic to normochromatic erythrocytes should be determined for each animal by counting a total of 200 erythrocytes. To ensure consistency with OECD and other guidelines, 1,000 polychromatic erythrocytes are recommended. Additional information may be obtained by scoring normochromatic erythrocytes for micronuclei.

(f) *Data and report*—(1) *Treatment of results.* Criteria for scoring micronuclei shall be given. Individual data shall be presented in a tabular form including positive and negative (vehicle) controls and experimental groups. The number of polychromatic erythrocytes scored, the number of micronucleated polychromatic erythrocytes, the percentage of micronucleated cells, the number of micronucleated normochromatic erythrocytes, and, if applicable, the percentage of micronucleated erythrocytes and the ratio of normochromatic

to polychromatic erythrocytes shall be listed separately for each experimental and control animal. Absolute numbers shall be included if percentages are reported.

(2) *Statistical evaluation.* Data should be evaluated by appropriate statistical methods.

(3) *Interpretation of results.* (i) There are several criteria for determining a positive response, one of which is a statistically significant dose-related increase in the number of micronucleated polychromatic erythrocytes. Another criterion may be based upon detection of a reproducible and statistically significant positive response for at least one of the test substance concentrations.

(ii) A test substance which does not produce either a statistically significant dose-related increase in the number of micronucleated polychromatic erythrocytes or a statistically significant and reproducible positive response at any one of the test points is considered nonmutagenic in this system.

(iii) Both biological and statistical significance should be considered together in the evaluation.

(4) *Test evaluation.* (i) The results of the micronucleus test provide information on the ability of a chemical to induce micronuclei in polychromatic erythrocytes of the test species under the conditions of the test. This damage may have been the result of chromosomal damage or damage to the mitotic apparatus.

(ii) Negative results indicate that under the test conditions the test substance does not produce micronuclei in the bone marrow of the test species.

(5) *Test report.* In addition to the reporting recommendations as specified under 40 CFR part 792, subpart J, the following specific information shall be reported:

(i) Species, strain, age, weight, number and sex of animals in each treatment and control group.

(ii) Test chemical vehicle, dose levels used, rationale for dose selection.

(iii) Rationale for and description of treatment and sampling schedules, toxicity data, negative and positive controls.

(iv) Details of the protocol used for slide preparation.

(v) Criteria for identifying micronucleated erythrocytes.

(vi) Dose-response relationship, if applicable.

(g) *References.* For additional background information on this test guideline the following references should be consulted:

(1) Cihak, R. ''Evaluation of benzidine by the micronucleus test,'' *Mutation Research,* 67: 383–384 (1979).

(2) Cole, R.J., Taylor, N., Cole, J., Arlett, C.F. ''Short-term tests for transplacentally active carcinogens. 1. Micronucleus formation in fetal and maternal mouse erythroblasts,'' *Mutation Research,* 80: 141–157 (1981).

(3) Kliesch, U., Danford, N., Adler, I.D. ''Micronucleus test and bone-marrow chromosome analysis. A comparison of 2 methods in vivo for evaluating chemically induced chromosomal alterations,'' *Mutation Research,* 80: 321–332 (1981).

(4) Matter, B., Schmid, W. ''Trenimon-induced chromosomal damage in bone-marrow cells of six mammalian species, evaluated by the micronucleus test,'' *Mutation Research,* 12: 417–425 (1971).

(5) Schmid, W. ''The micronucleus test,'' *Mutation Research, 31:9–15 (1975).*

(6) Schmid, W. ''The micronucleus test for cytogenetic analysis,'' *Chemical Mutagens, Principles and Methods for their Detection.* Vol. 4 Hollaender A, (Ed. A ed. (New York and London: Plenum Press, (1976) pp. 31–53.

(7) Heddle, J.A., Hite, M., Kurkhart, B., Mavournin, K., MacGregor, J.T., Newell, G.W., Salamone, M.F. ''The induction of micronuclei as a measure of genotoxicity. A report of the U.S. Environmental Protection Agency Gene-Tox Program,'' *Mutation Research,* 123: 61–118 (1983).

[50 FR 39397, Sept. 27, 1985, as amended at 52 FR 19080, May 20, 1987; 52 FR 26150, July 13, 1987; 52 FR 34654, Sept. 14, 1987]

§ 798.5450 Rodent dominant lethal assay.

(a) *Purpose.* Dominant lethal (DL) effects cause embryonic or fetal death. Induction of a dominant lethal event after exposure to a chemical substance indicates that the substance has affected germinal tissue of the test species. Dominant lethals are generally accepted to be the result of chromosomal damage (structural and numerical anomalies) but gene mutations and toxic effects cannot be excluded.

(b) *Definition.* A dominant lethal mutation is one occurring in a germ cell which does not cause dysfunction of

the gamete, but which is lethal to the fertilized egg or developing embryo.

(c) *Reference substances.* These may include, but need not be limited to, triethylenemelamine, cyclophosphamide or ethyl methanesulfonate.

(d) *Test method*—(1) *Principle.* Generally, male animals are exposed to the test substance and mated to untreated virgin females. The various germ cell stages can be tested separately by the use of sequential mating intervals. The females are sacrificed after an appropriate period of time and the contents of the uteri are examined to determine the numbers of implants and live and dead embryos. The calculation of the dominant lethal effect is based on comparison of the live implants per female in the treated group to the live implants per female in the control group. The increase of dead implants per female in the treated group over the dead implants per female in the control group reflects the post-implantation loss. The post-implantation loss is calculated by determining the ratio of dead to total implants from the treated group compared to the ratio of dead to total implants from the control group. Pre-implantation loss can be estimated on the basis of corpora lutea counts or by comparing the total implants per female in treated and control groups.

(2) *Description.* (i) Several treatment schedules are available. The most widely used requires single administration of the test substance. Other treatment schedules, such as treatment on five consecutive days, may be used if justified by the investigator.

(ii) Individual males are mated sequentially to virgin females at appropriate intervals. The number of matings following treatment is governed by the treatment schedule and should ensure that germ cell maturation is adequately covered. Females are sacrificed in the second half of pregnancy and the uterine contents examined to determine the total number of implants and the number of live and dead embryos.

(3) *Animal selection*—(i) *Species.* Rats or mice are generally used as the test species. Strains with low background dominant lethality, high pregnancy frequency and high implant numbers are recommended.

(ii) *Age.* Healthy, sexually mature animals shall be used.

(iii) *Number.* An adequate number of animals shall be used taking into account the spontaneous variation of the biological characteristics being evaluated. The number chosen should be based on the predetermined sensitivity of detection and power of significance. For example, in a typical experiment, the number of males in each group shall be sufficient to provide between 30 and 50 pregnant females per mating interval.

(iv) *Assignment to groups.* Animals shall be randomized and assigned to treatment and control groups.

(4) *Control groups*—(i) *Concurrent controls.* Generally concurrent positive and negative (vehicle) controls shall be included in each experiment. When acceptable positive control results are available from experiments conducted recently (within the last 12 months) in the same laboratory these results can be used instead of a concurrent positive control.

(ii) *Positive controls.* Positive control substances shall be used at a dose which demonstrates the test sensitivity.

(5) *Test chemicals*—(i) *Vehicle.* When possible, test substances shall be dissolved or suspended in isotonic saline or distilled water. Water-insoluble chemicals may be dissolved or suspended in appropriate vehicles. The vehicle used shall neither interfere with the test chemical nor produce toxic effects. Fresh preparations of the test chemical should be employed.

(ii) *Dose levels.* Normally, three dose levels shall be used. The highest dose shall produce signs of toxicity (e.g., slightly reduced fertility and slightly reduced body weight). However, in an initial assessment of dominant lethality a single high dose may be sufficient. Nontoxic substances shall be tested at 5g/kg or, if this is not practicable, then as the highest dose attainable.

(iii) *Route of administration.* The usual routes of administration are oral or by IP injection. Other routes may be appropriate.

(e) *Test performance.* (1) Individual males are mated sequentially at appropriate predetermined intervals to one

or two virgin females. Females should be left with the males for at least the duration of one estrus cycle or alternatively until mating has occurred as determined by the presence of sperm in the vagina or by the presence of a vaginal plug.

(2) The number of matings following treatment should be governed by the treatment schedule and should ensure that germ cell maturation is adequately covered.

(3) Females should be sacrificed in the second half of pregnancy and uterine contents examined to determine the number of implants and live and dead embryos. The ovaries may be examined to determine the number of corpora lutea.

(f) *Data and report*—(1) *Treatment of results.* Data shall be tabulated to show the number of males, the number of pregnant females, and the number of nonpregnant females. Results of each mating, including the identity of each male and female, shall be reported individually. For each female, the dose level and week of mating and the frequencies of live implants and of dead implants shall be enumerated. If the data are recorded as early and late deaths, the tables shall make that clear. If preimplantation loss is estimated, it shall be reported. Preimplantation loss can be calculated as the difference between the number of corpora lutea and the number of implants or as a reduction in the average number of implants per female in comparison with control matings.

(2) *Statistical evaluation.* Data shall be evaluated by appropriate statistical methods. Differences among animals within the control and treatment groups shall be considered before making comparisons between treated and control groups.

(3) *Interpretation of results.* (i) There are several criteria for determining a positive result, one of which is a statistically significant dose-related increase in the number of dominant lethals. Another criterion may be based upon detection of a reproducible and statistically significant positive response for at least one of the test points.

(ii) A test substance which does not produce either a statistically significant dose-related increase in the number of dominant lethals or a statistically significant and reproducible positive response at any one of the test points is considered nonmutagenic in this system.

(iii) Both biological and statistical significance should be considered together in the evaluation.

(4) *Test evaluation.* (i) A positive DL assay suggests that under the test conditions the test substance may be genotoxic in the germ cells of the treated sex of the test species.

(ii) A negative result suggests that under the conditions of the test the test substance may not be genotoxic in the germ cells of the treated sex of the test species.

(5) *Test report.* In addition to the reporting recommendations as specified under 40 CFR part 792, subpart J the following specific information shall be reported:

(i) Species, strain, age and weights of animals used, number of animals of each sex in experimental and control groups.

(ii) Test substance, vehicle used, dose levels and rationale for dosage selection, negative (vehicle) and positive controls, experimental observations, including signs of toxicity.

(iii) Route and duration of exposure.

(iv) Mating schedule.

(v) Methods used to determine that mating has occurred (where applicable).

(vi) Criteria for scoring dominant lethals including the number of early and late embryonic deaths.

(vii) Dose-response relationship, if applicable.

(g) *References.* For additional background information on this test guideline the following references should be consulted:

(1) Brewen, J.G., Payne, H.S., Jones, K.P., Preston, R.J. ''Studies on chemically induced dominant lethality. I. The cytogenetic basis of MMS-induced dominant lethality in post-meiotic germ cells'' *Mutation Research*, 33:239–250 (1975).

(2) Ehling, U.H., Machemer, L., Buselmaier, E., Dycka, D., Frohberg, H., Kratochvilova, J., Lang, R., Lorke, D., Muller, D., Pheh, J., Rohrborn, G., Roll, R., Schulze-Schencking, M., Wiemann, H. ''Standard protocol for the dominant lethal test on male mice. Set up by the Work Group ''Dominant lethal mutations of the ad hoc

Committee Chemogenetics,'' *Archives of Toxicology*, 39:173–185 (1978).

[50 FR 39397, Sept. 27, 1985, as amended at 52 FR 19081, May 20, 1987]

§ 798.5460 Rodent heritable translocation assays.

(a) *Purpose.* This test detects transmitted chromosomal damage which manifests as balanced reciprocal translocations in progeny descended from parental males treated with chemical mutagens.

(b) *Definitions.* (1) A heritable translocation is one in which distal segments of nonhomologous chromosomes are involved in a reciprocal exchange.

(2) Diakinesis and metaphase I are stages of meiotic prophase scored cytologically for the presence of multivalent chromosome association characteristic of translocation carriers.

(c) *Reference substances.* Not applicable.

(d) *Test method*—(1) *Principle.* When a balanced reciprocal translocation is induced in a parental male germ cell, the resulting progeny is translocation heterozygote.

(i) *Basis for fertility screening.* Male translocation heterozygotes may be completely sterile. This class consists of two types of translocations:

(A) Translocations between non-homologous chromosomes in which at least one of the breaks occurs close to one end of a chromosome.

(B) Those that carry multiple translocations. The majority of male translocation heterozygotes are semisterile—they carry one or (rarely) two translocations. The degree of semisterility is dependent upon the proportions of balanced and unbalanced (duplication-deficiency) gametes produced in the ejaculate as a function of meiotic segregation. Balanced and unbalanced sperm are equally capable of fertilizing an egg. Balanced sperm lead to viable progeny. Unbalanced sperm result in early embryonic lethality.

(ii) *Basis for cytological screening.* The great majority of male translocation heterozygotes can be identified cytologically through analysis of diakinesis metaphase I spermatocytes. Translocation heterozygotes are characterized by the presence of multivalent chromosome association such as a ring or chain of four chromosomes held together by chiasmata in paired homologous regions. Some translocation carriers can be identified by the presence of extra long and/or extra short chromosomes in spermatogonial and somatic cell metaphase preparations.

(2) *Description.* Essentially, two methods have been used to screen for translocation heterozygosity; one method uses a mating sequence to identify sterile and semisterile males followed by cytological examination of suspect male individuals; the other method deletes the mating sequence altogether and all F_1 male progeny are examined cytologically for presence of translocation. In the former approach, the mating sequence serves as a screen which eliminates most fully fertile animals for cytological confirmation as translocation heterozygotes.

(3) *Animal selection*—(i) *Species.* The mouse is the species generally used, and is recommended.

(ii) *Age.* Healthy sexually mature animals shall be used.

(iii) *Number.* (A) The number of male animals necessary is determined by the following factors:

(*1*) The use of either historical or concurrent controls.

(*2*) The power of the test.

(*3*) The minimal rate of induction required.

(*4*) Whether positive controls are used.

(*5*) The level of significance desired.

(B) [Reserved]

(iv) *Assignment to groups.* Animals shall be randomized and assigned to treatment and control groups.

(4) *Control groups*—(i) *Concurrent controls.* No concurrent positive or negative (vehicle) controls are recommended as routine parts of the heritable translocation assay. However, investigators not experienced in performing translocation testing shall include a substance known to produce translocations in the assay as a positive control reference chemical.

(ii) *Historical controls.* At the present time, historical control data must be used in tests for significance. When

statistically reliable historical controls are not available, negative (vehicle) controls shall be used.

(5) *Test chemicals*—(i) *Vehicle.* When appropriate for the route of administration, solid and liquid test substances should be dissolved or suspended in distilled water or isotonic saline. Water-insoluble chemicals may be dissolved or suspended in appropriate vehicles. The vehicle used shall neither interfere with the test chemical nor produce toxic effects. Fresh preparations of the test chemical should be employed.

(ii) *Dose levels.* At least two dose levels shall be used. The highest dose level shall result in toxic effects (which shall not produce an incidence of fatalities which would prevent a meaningful evaluation) or shall be the highest dose attainable or 5g/kg body weight.

(iii) *Route of administration.* Acceptable routes of administration include oral, inhalation, admixture with food or water, and IP or IV injection.

(e) *Test performance*—(1) *Treatment and mating.* The animals shall be dosed with the test substances 7 days per week over a period of 35 days. After treatment, each male shall be caged with 2 untreated females for a period of 1 week. At the end of 1 week, females shall be separated from males and caged individually. When females give birth, the day of birth, litter size, and sex of progeny shall be recorded. All male progeny should be weaned, and all female progeny should be discarded.

(2) *Testing for translocation heterozygosity*. When males are sexually mature, testing for translocation heterozygosity shall begin. One of two methods shall be used; the first method involves mating, determining those F_1 progeny which are sterile or semisterile and subsequent cytological analysis of suspect progeny; the other method does not involve mating and determining sterility or semisterility; all progeny are examined cytologically.

(i) *Determination of sterility or semisterility*—(A) *Conventional method.* Females are mated, usually three females for each male, and each female is killed at midpregnancy. Living and dead implantations are counted. Criteria for determining normal and semisterile males are usually established for each new strain because the number of dead implantations varies considerably among strains.

(B) *Sequential method.* Males to be tested are caged individually with females and the majority of the presumably normal males are identified on the basis of a predetermined size of 1 or 2 litters. Breeding pens are examined daily on weekdays beginning 18 days after pairing. Young are discarded immediately after they are scored. Males that sire a litter whose size is the same as or greater than the minimum set for a translocation-free condition are discarded with their litter. If the litter size is smaller than the predetermined number, a second litter is produced with the same rule applying. Males that cannot be classified as normal after production of a second litter are tested further by the conventional method or by cytological confirmation of translocation.

(ii) *Cytological analysis.* For cytological analysis of suspected semisteriles, the air-drying technique is used. Observation of at least 2 diakinesis-metaphase 1 cells with mutivalent association constitutes the required evidence for the presence of a translocation. Sterile males are examined by one of two methods, those with testes of normal size and sperm in the epididymis are examined by the same techniques used for semisteriles. Animals with small testes are examined by squash preparations or, alternatively, by examination of mitotic metaphase preparations. If squash preparations do not yield diakinesis-metaphase 1 cells, analysis of spermatogonia or bone marrow for the presence of unusually long or short chromosomes should be performed.

(f) *Data and report*—(1) *Treatment of results.* (i) Data shall be presented in tabular form and shall include the number of animals at risk, the germ cell stage treated, the number of partial steriles and semisteriles (if the fertility test is used), the number of cytogenetically confirmed translocation heterozygotes (if the fertility test is used, report the number of confirmed steriles and confirmed partial steriles), the translocation rate, and either the

standard error of the rate or the upper 95 percent confidence limit on the rate.

(ii) These data shall be presented for both treated and control groups. Historical or concurrent controls shall be specified, as well as the randomization procedure used for concurrent controls.

(2) *Statistical evaluation.* Data shall be evaluated by appropriate statistical methods.

(3) *Interpretation of results.* (i) There are several criteria for determining a positive result, one of which is a statistically significant dose-related increase in the number of heritable translocations. Another criterion may be based upon detection of a reproducible and statistically significant positive response for at least one of the test points.

(ii) A test substance which does not produce either a statistically significant dose-related increase in the number of heritable translocations or a statistically significant and reproducible positive response at any one of the test points is considered nonmutagenic in this system.

(iii) Both biological and statistical significance should be considered together in the evaluation.

(4) *Test evaluation.* (i) Positive results in the heritable translocation assay indicate that under the test conditions the test substance causes heritable chromosomal damage in the test species.

(ii) Negative results indicate that under the test conditions the test substance does not cause heritable chromosomal damage in the test species.

(5) *Test report.* In addition to the reporting recommendations as specified under 40 CFR part 792, subpart J, the following specific information shall be reported:

(i) Species, strain, age, weight and number of animals of each sex in each group.

(ii) Test chemical vehicle, route and schedule of administration, toxicity data.

(iii) Dosing regimen, doses tested and rationale for dosage selection.

(iv) Mating schedule, number of females mated to each male.

(v) The use of historical or concurrent controls.

(vi) Screening procedure including the decision criteria used and the method by which they were determined.

(vii) Dose-response relationship, if applicable.

(g) *References.* For additional background information on this test guideline the following references should be consulted:

(1) Generoso, W.M., Bishop, J.B., Goslee, D.G., Newell, G.W., Sheu, G–J, von Halle, E. ''Heritable translocation test in mice,'' *Mutation Research*, 76:191–215 (1980).

(2) [Reserved]

[50 FR 39397, Sept. 27, 1985, as amended at 52 FR 19081, May 20, 1987]

§ 798.5500 Differential growth inhibition of repair proficient and repair deficient bacteria: "Bacterial DNA damage or repair tests."

(a) *Purpose.* Bacterial DNA damage or repair tests measure DNA damage which is expressed as differential cell killing or growth inhibition of repair deficient bacteria in a set of repair proficient and deficient strains. These tests do not measure mutagenic events *per se*. They are used as an indication of the interaction of a chemical with genetic material implying the potential for genotoxicity.

(b) *Definition.* Test for differential growth inhibition of repair proficient and repair deficient bacteria measure differences in chemically induced cell killing between wild-type strains with full repair capacity and mutant strains deficient in one or more of the enzymes which govern repair of damaged DNA.

(c) *Reference substances.* These may include, but need not be limited to, chloramphenicol or methyl methanesulfonate.

(d) *Test method*—(1) *Principle.* The tests detect agents that interact with cellular DNA to produce growth inhibition or killing. This interaction is recognized by specific cellular repair systems. The assays are based upon the use of paired bacterial strains that differ by the presence of absence of specific DNA repair genes. The response is expressed in the preferential inhibition of growth or the preferential killing of the DNA repair deficient strain since it is incapable of removing certain chemical lesions from its DNA.

(2) *Description*. Several methods for performing the test have been described. Those described here are:

(i) Tests performed on solid medium (diffusion tests).

(ii) Tests performed in liquid culture (suspension tests).

(3) *Strain selection*—(i) *Designation*. At the present time, *Escherichia coli polA* (W3110/p3478) or *Bacillus subtilis rec* (H17/M45) pairs are recommended. Other pairs may be utilized when appropriate.

(ii) *Preparation and storage*. Stock culture preparation and storage, growth requirements, method of strain identification and demonstration of appropriate phenotypic requirements should be performed using good microbiological techniques and should be documented.

(4) *Bacterial growth*. Good microbiological techniques should be used to grow fresh cultures of bacteria. The phase of growth and cell density should be documented and should be adequate for the experimental design.

(5) *Metabolic activation*. Bacteria should be exposed to the test substance both in the presence and absence of an appropriate metabolic activation system. The most commonly used system is a cofactor supplemented postmitochondrial fraction prepared from the livers of rodents treated with enzyme inducing agents. The use of other species, tissues or techniques may also be appropriate.

(6) *Control groups*—(i) *Concurrent controls*. Concurrent positive, negative, and vehicle controls should be included in each assay.

(ii) *Negative controls*. The negative control should show nonpreferential growth inhibition (i.e., should affect both strains equally). Chloramphenicol is an example of a negative control.

(iii) *Genotype specific controls*. Examples of genotype specific positive controls are methyl methanesulfonate for *polA* strains and mitomycin C for *rec* strains.

(iv) *Positive controls to ensure the efficacy of the activation system*. The positive control reference substance for tests including a metabolic activation system should be selected on the basis of the type of activation system used in the test.

(v) *Other positive controls*. Other positive control reference substances may be used.

(7) *Test chemicals*—(i) *Vehicle*. Test chemicals and positive and negative control reference substances should be dissolved in an appropriate vehicle and then further diluted in vehicle for use in the assay.

(ii) *Exposure concentrations*. The test should initially be performed over a broad range of concentrations. Among the criteria to be taken into consideration for determining the upper limits of test chemical concentration are cytotoxicity and solubility. Cytotoxicity of the test chemical may be altered in the presence of metabolic activation systems. For freely soluble nontoxic chemicals, the upper test chemical concentration should be determined on a case by case basis. Because results are expressed as diameters of zones of growth inhibition in the diffusion test, it is most important that the amounts of chemical on the disc (or in the wells) are exact replicates. When appropriate, a positive response should be confirmed by testing over a narrow range of concentrations.

(e) *Test performance*—(1) *Diffusion assay*—(i) *Disc diffusion assays*. Disc diffusion assays. may be performed in two ways:

(A) A single strain of bacteria may be added to an agar overlay or spread on the surface of the agar and the test chemical placed on a filter disc on the surface of the agar or;

(B) DNA repair proficient and DNA repair deficient bacteria may be streaked in a line on the surface of the agar of the same plate and a disc saturated with test chemical placed on the surface of the agar in contact with the streaks.

(ii) *Well diffusion assays*. In well diffusion assays, bacteria may be either added to the agar overlay or spread onto the surface of the agar. A solution of the test chemical is then placed into a well in the agar.

(2) *Suspension assays*. (i) A bacterial suspension may be exposed to the test chemical and the number of surviving bacteria determined (as colony-forming units) either as a function of time of

treatment or as a function of the concentration of test agent.

(ii) Nonturbid suspensions of bacteria may be exposed to serial dilutions of the test agent and a minimal inhibitory concentration for each strain determined, as evidenced by the presence or absence of visible growth after a period of incubation.

(iii) Paired bacterial suspensions (usually with some initial turbidity) may be treated with a single dose of the chemical. Positive results are indicated by a differential inhibition in the rate of increase of turbidity of the paired cultures.

(3) *Number of cultures.* When using a plate diffusion procedure, at least two independent plates should be used at each dilution. In liquid suspension assays, at least two independent specimens for determination of the number of viable cells should be plated.

(4) *Incubation conditions.* All plates in a given test should be incubated for the same time period. This incubation period should be for 18 to 24 hrs at 37 ° C.

(f) *Data and report*—(1) *Treatment of results*—(i) *Diffusion assays.* Results should be expressed in diameters of zones of growth inhibition in millimeters or as areas derived therefrom as mm^2. Dose-response data, if available, should be presented using the same units.

(ii) *Liquid suspension assays.* (A) Survival data can be presented as dose responses, preferably as percentage of survivors or fractional survival of each strain or as a relative survival (ratio) of the two strains.

(B) Results can also be expressed as the concentrations required to effect a predetermined survival rate (e.g., D_{37}, the dose permitting 37 percent survival). These data are derived from the survival curve. The concentration should be expressed as weight per volume, as moles, or as molarity.

(C) Similarly, results can be expressed as minimal inhibitory concentration or as minimal lethal dose. The former is determined by the absence of visible growth in liquid medium and the latter is determined by plating dilutions onto semisolid media.

(iii) In all tests, concentrations must be given as the final concentrations during the treatment. Raw data, prior to transformation, should be provided. These should include actual quantities measured, e.g., neat numbers. For measurement of diffusion, the diameters of the discs and/or well should be indicated and the measurements should indicate whether the diameter of the discs and/or well was subtracted. Moreover, mention should be made as to whether the test chemical gave a sharp, diffuse, or double-zone of growth inhibition. If it is the latter, the investigator should indicate whether the inner or the outer zone was measured.

(iv) Viability data should be given as the actual plate counts with an indication of the dilution used and the volume plated or as derived titers (cells per ml). Transformed data alone in the absence of experimental data are not acceptable (i.e, ratios, differences, survival fraction).

(2) *Statistical evaluation.* Data should be evaluated by appropriate statistical methods.

(3) *Interpretation of results.* (i) There are several criteria for determining a positive result, one of which is a statistically significant dose-related preferential inhibition or killing of the repair deficient strain. Another criterion may be based upon detection of a reproducible and statistically significant positive response for at least one of the test points.

(ii) A test substance which does not produce either a statistically significant dose-related preferential inhibition or killing of the repair deficient strain or a statistically significant and reproducible positive response at any one of the test points is considered not to interact with the genetic material of the organisms used in assay.

(iii) Both biological and statistical significance should be considered together in the evaluation.

(4) *Test evaluation.* DNA damage tests in bacteria do not measure DNA repair *per se* nor do they measure mutations. They measure DNA damage which is expressed as cell killing or growth inhibition. A positive result in a DNA damage test in the absence of a positive result in another system is difficult to evaluate in the absence of a better data base.

(5) *Test report.* In addition to the reporting recommendations as specified

under 40 CFR part 792, subpart J the following specific information should be reported:

(i) Bacterial strains used.

(ii) Phase of bacterial cell growth at time of use in the assay.

(iii) Media composition.

(iv) Details of both the protocol used to prepare the metabolic activation system and its use in the assay.

(v) Treatment protocol, including doses used and rationale for dose selection, positive and negative controls.

(vi) Method used for determination of degree of cell kill.

(vii) Dose-response relationship, if applicable.

(g) *References.* For additional background information on this test guideline the following references should be consulted:

(1) Ames, B.N., McCann, J., Yamasaki, E. ''Methods for detecting carcinogens and mutagens with the *Salmonella*/mammalian-microsome mutagenicity test,'' *Mutation Research*, 31:347–364 (1975).

(2) Kada, T., Sadie, Y., Tutikawa, K. ''In vitro and host-mediated ''rec-assay'' procedures for screening chemical mutagens; and phloxine, a mutagenic red dye detected,'' *Mutation Research*, 16:165–174 (1972).

(3) Leifer, Z., Kada, T., Mandel, M., Zeiger, E., Stafford, R., Rosenkranz, H.S. ''An evaluation of bacterial DNA repair tests for predicting genotoxicity and carcinogenicity: A report of the U.S. EPA's Gene-Tox Program,'' *Mutation Research*, 87:211–297 (1981).

(4) Slater, E.E., Anderson, M.D., Rosenkranz, H.S. ''Rapid detection of mutagens and carcinogens.'' *Cancer Research*, 31:970–973 (1971).

§ 798.5955 Heritable translocation test in drosophila melanogaster.

(a) *Purpose.* The heritable translocation test in *Drosophila* measures the induction of chromosomal translocations in germ cells of insects. Stocks carrying genetic markers on two or more chromosomes are used to follow the assortment of chromosomes in meiosis. The F_1 male progeny of treated parents are individually mated to females and the F_2 progeny phenotypes are scored. The observed spectrum of phenotypes is used to determine the presence or absence of a translocation. This is usually indicated by a lack of independent assortment of genes on different chromosomes.

(b) *Definitions*—(1) Chromosome mutations are chromosomal changes resulting from breakage and reunion of chromosomes. Chromosomal mutations are also produced through nondisjunction of chromosomes during cell division.

(2) Reciprocal translocations are chromosomal translocations resulting from reciprocal exchanges between two or more chromosomes.

(3) Heritable translocations are reciprocal translocations transmitted from parent to the succeeding progeny.

(c) *Reference substances.* These may include, but need not be limited to, ethyl methanesulfonate or N-dimethylnitrosamine.

(d) *Test method*—(1) *Principle.* The method is based on the principle that balanced reciprocal chromosomal translocations can be induced by chemicals in the germ cells of treated flies and that these translocations are detected in the F_2 progeny using genetic markers (mutations). Different mutations may be used as genetic markers and two or more of the four chromosomes may be genetically marked for inclusion in this test.

(2) *Description.* Wild-type males are treated with chemical and bred with females of known genetic markers. The F_1 males are collected and individually bred with virgin females of the female parental stock. The resulting F_2 progeny are scored. Putative translocation carriers are confirmed with an F_3 cross.

(i) *Illustrative example.* The following example serves to illustrate the method. Males carrying genes for red eye color on chromosomes II and III are bred with females of white eye color carrying alleles for brown (bw) on the second chromosome and scarlet (st) and pink (pp) on the third chromosome. The F_1 male progeny are bred with virgin females of the female parental stock and the resulting F_2 progeny are examined for eye color phenotypes. If there is no translocation in the F_1 male, then the resulting F_2 progeny will have four eye color phenotypes: red, white, orange, and brown. If the F_1 male carries a translocation between chromosomes II and III, only red and white eye phenotypes are obtained in the F_2 generation. This happens because the F_1 translocation heterozygote produces two balanced (carrying either the parental or the translocated

configuration of markers) and two unbalanced gametes. The unbalanced gametes (carrying one normal and one translocated chromosome) are unable to develop into normal individuals in the F_2 generation.

(ii) [Reserved]

(3) *Drosophila stocks.* Wild-type males and females of the genotype bw:st:pp (white eyes) may be used in the heritable translocation test. Other appropriately marked *Drosophila* stocks may also be used.

(4) *Control groups.* (i) Concurrent positive and negative (vehicle) controls should be included in each experiment.

(ii) Negative (vehicle) controls should be included. The size of the negative (vehicle) control group should be determined by the availability of appropriate laboratory historical control data.

(iii) If the historical control data are of sufficient numbers, concurrent controls may not be necessary.

(5) *Test chemicals*—(i) *Vehicle.* Test chemicals should be dissolved in water. Compounds which are insoluble in water may be dissolved or suspended in appropriate vehicles (e.g., a mixture of ethanol and Tween-60 or 80), and then diluted in water or saline prior to administration. Dimethylsulfoxide should be avoided as a vehicle.

(ii) *Dose levels.* For the initial assessment of mutagenicity, it may be sufficient to test a single dose of the test substance. This dose should be the maximum tolerated dose or that which produces some indication of toxicity. If the test is being used to verify mutagenic activity, at least two additional exposure levels should be used.

(iii) *Route of administration.* Exposure may be oral, by injection or by exposure to gases or vapours. Feeding of the test compound may be done in sugar solution. When necessary, substances may be dissolved in 0.7 percent NaCl solution and injected into the thorax or abdomen.

(e) *Test performance*—(1) *P1 mating.* (i) In the primary screen of a chemical, it is enough to sample one germ cell stage, either mature sperm or spermatids (for indirect acting mutagens). Other stages may be sampled if needed, i.e., when mature germ cells give a positive result and data from earlier germ cells are needed for the purpose of risk assessment. Thus, the treated males may be mated only once for a period of 3 days to sample sperm or transferred every 2 to 3 days to cover the entire germ cell cycle.

(ii) Mass matings may be performed because the control rate for translocations in the available literature is very low (near 0) and clustered events are extremely rare. Mated females may be aged for 2 weeks in order to recover an enhanced incidence of translocation due to the storage effect. The females are then allowed to lay eggs and F_1 males are collected for test mating.

(2) *F_1* mating. F_1 males should be bred with virgin females of the parental female stock. Since each F_1 male represents one treated gamete of the male parent, the F_1 males have to be mated individually to virgin females. Each F_1 male should be mated to three females to ensure sufficient progeny.

(3) *Scoring the F_2 generation.* F_2 cultures (each representing 1 F_1 male tested) should be scored for the presence or absence of phenotype variations (linkage of markers) from the expected types. The test should be designed with a predetermined sensitivity and power. The number of flies in each group should reflect these defined parameters. The spontaneous mutant frequency observed in the appropriate control group will strongly influence the number of treated chromosomes that must be analyzed to detect substances which show mutation rates close to those of the controls. A positive test should be confirmed by F_3 mating trials.

(4) *Number of replicate experiments.* Replicate experiments are usually performed for each dose of the compound tested. If a chemical is a potent inducer of translocations, one experiment may be sufficient. Otherwise two or three replicate experiments should be done.

(f) *Data and report*—(1) *Treatment of results.* Data should be tabulated to show the number of translocations and the number of fertile F_1 males at each exposure for each germ cell stage sampled.

(2) *Statistical evaluation.* Data should be evaluated by appropriate statistical methods.

(3) *Interpretation of results.* (i) There are several criteria for determining a positive result, one of which is a statistically significant dose-related increase in the number of heritable translocations. Another criterion may be based upon detection of a reproducible and statistically significant positive response for at least one of the test points.

(ii) A test substance which does not produce either a statistically significant dose-related increase in the number of heritable translocations or a statistically significant and reproducible positive response at any one of the test points is considered nonmutagenic in this system.

(iii) Both biological and statistical significance should be considered together in the evaluation.

(4) *Test evaluation.* (i) Positive results in the heritable translocation test in *Drosophila* indicate that under the test conditions the test substance causes chromosome damage in germ cells of this insect.

(ii) Negative results indicate that under the test conditions the test substance does not cause chromosomal damage in *D. melanogaster.*

(5) *Test report.* In addition to the reporting recommendations as specified under 40 CFR part 792, subpart J, the following specific information should be reported:

(i) *Drosophila* stock used in the assay, age of insects, number of males treated, number of F_2 cultures established, number of replicate experiments.

(ii) Test chemical vehicle, treatment and mating schedule, exposure levels, toxicity data, dose and route of exposure.

(iii) Positive and negative (vehicle) controls.

(iv) Historical control data, if available.

(v) Number of chromosomes scored.

(vi) Criteria for scoring mutant chromosomes.

(vii) Dose-response relationship, if applicable.

(g) *References.* For additional background information on this test guideline the following references should be consulted:

(1) Wurgler, F.E., Sobels, F.H., Vogel, E. ''*Drosophila* as assay system for detecting genetic changes,'' *Handbook of mutagenicity test procedures.* Eds. Kilby, B.J., Legator, M., Nichols, W., Ramel, C. (Amsterdam: Elsevier/North Holland Biomedical Press, 1979) pp. 335–374.

(2) [Reserved]

Subpart G—Neurotoxicity

§ 798.6050 Functional observational battery.

(a) *Purpose.* In the assessment and evaluation of the potential human health effects of substances, it may be necessary to test for neurotoxic effects. Substances that have been observed to cause neurotoxic signs (e.g., convulsions, tremors, ataxia) in other toxicity tests, as well as those having a structural similarity to known neurotoxicants, should be evaluated for neurotoxicity. The functional observational battery is a noninvasive procedure designed to detect gross functional deficits in young adults resulting from exposure to chemicals and to better quantify neurotoxic effects detected in other studies. This battery of tests is not intended to provide a detailed evaluation of neurotoxicity. It is designed to be used in conjunction with neuropathologic evaluation and/or general toxicity testing. Additional functional tests may be necessary to assess completely the neurotoxic potential of a chemical.

(b) *Definitions.* (1) Neurotoxicity is any adverse effect on the structure or function of the central and/or peripheral nervous system related to exposure to a chemical substance.

(2) A toxic effect is an adverse change in the structure or function of an experimental animal as a result of exposure to a chemical substance.

(c) *Principle of the test method.* The material is administered by an appropriate route to laboratory rodents. The animals are observed under carefully standardized conditions with sufficient frequency to ensure the detection of behavioral and/or neurologic abnormalities, if present. Various functions that could be affected by neurotoxicants are assessed during each observation period.

(d) *Test procedures*—(1) *Animal selection*—(i) *Species and strain.* The laboratory rat or mouse is recommended. Although information will generally be lacking, whenever possible the choice of species should take into consideration such factors as the comparative metabolism of the chemical and species sensitivity to the toxic effects of the test substance, as evidenced by the results of other studies. The potential for combined studies should also be considered. Standard strains should be used.

(ii) *Age.* Young adult animals (at least 42 days old for the rat or mouse) shall be used.

(iii) *Sex.* (A) Equal numbers of animals of each sex are required for each dose level.

(B) The females shall be nulliparous and nonpregnant.

(2) *Number of animals.* At least eight animals of each sex should be used at each dose level and should be designated for behavioral testing. If interim sacrifices are planned, the number should be increased by the number of animals scheduled to be sacrificed before the end of the study. Animals shall be randomly assigned to treatment and control groups.

(3) *Control groups.* (i) A concurrent (''sham'' exposure or vehicle) control group is required. Subjects shall be treated in the same way as for an exposure group except that administration of the test substance is omitted.

(ii) Concurrent or historic data from the laboratory performing the testing shall provide evidence of the ability of the procedures used to detect major neurotoxic endpoints such as limb weakness or paralysis (e.g., acrylamide), CNS stimulation (e.g., β, β′-iminodiproprionitrile) autonomatic signs (e.g., physostigmine).

(iii) A satellite group may be treated with the high dose level for the duration of exposure and observed for reversibility, persistence, or delayed occurrence of toxic effects for a post-treatment period of appropriate duration, normally not less than 28 days.

(4) *Dose levels and dose selection.* At least 3 doses, equally spaced on a log scale (e.g., ½ log units) over a range of at least 1 log unit shall be used in addition to a zero dose or vehicle administration. The data should be sufficient to produce a dose-effect curve.

(i) The highest dose shall produce (A) clear behavioral effects or (B) life-threatening toxicity.

(ii) The data from the lower doses must show either (A) graded dose-dependent effects at 2 dose levels or (B) no effects at 2 dose levels, respectively.

(5) *Duration and frequency of exposure.* The duration and frequency of exposure will be specified in the test rule.

(6) *Route of exposure.* The test substance shall be administered by the route specified in the test rule. This route will usually be the one most closely approximating the expected route of human exposure. The exposure potocol shall conform to that outlined in the appropriate acute or subchronic toxicity study guideline under subpart B or subpart C of this part.

(7) *Combined protocol.* Subjects used for other toxicity studies may be used if none of the requirements of either study are violated by the combination.

(8) *Study conduct.* (i) All animals in a given study should be observed carefully by trained technicians who are blind with respect to the animals' treatments. Standard procedures to minimize observer variability shall be followed. Where possible, it is advisable that the same observer be used to evaluate the animals in a given study. If this is not possible, some demonstration of inter-observer reliability is required. All animals should be observed prior to initiation of exposure. Subsequent observations should be made with sufficent frequency to ensure the detection of behavioral and/or neurologic abnormalities, if present. At minimum, observations at 1 hour, 6 hours, 24 hours, 7 days, and 14 days and monthly thereafter are recommended. In a subchronic study, subsequent to the first exposure all observations should be made before the daily exposure. The animals should be removed from the home cage to a standard arena for observation. Effort should be made to ensure that variations in the test conditions are minimal and are not systematically related to treatment. Among the variables that can affect behavior are sound level, temperature, humidity, lighting, odors, time of day, and environmental distractions.

Explicit, operationally defined scales for each function should be used. The development of objective quantitative measures of the observational endpoints specified is encouraged.

(ii) The following is a minimal list of observations that shall be noted:

(A) Any unusual responses with respect to body position, activity level, coordination of movement, and gait.

(B) Any unusual or bizarre behavior including, but not limited to, headflicking, head searching, compulsive biting or licking, self-mutilation, circling, and walking backwards.

(C) The presence of:

(*1*) Convulsions.

(*2*) Tremors.

(*3*) Increased levels of lacrimation and/or red-colored tears.

(*4*) Increased levels of salivation.

(*5*) Piloerection.

(*6*) Pupillary dilation or constriction.

(*7*) Unusual respiration (shallow, labored, dyspneic, gasping, and retching) and/or mouth breathing.

(*8*) Diarrhea.

(*9*) Excessive or diminished urination.

(*10*) Vocalization.

(D) Forelimb/hindlimb grip strength. The procedure described by Meyer et al. (1979), under paragraph (f)(9) of this section is recommended.

(E) Sensory function. A simple assessment of sensory function (vision, audition, pain perception) shall be made. Marshall et al. (1971) under paragraph (f)(8) of this section have described a neurologic exam for this purpose; these procedures are also discussed by Deuel (1977), under paragraph (f)(4) of this section. Irwin (1968) under paragraph (f)(7) of this section described a number of reflex tests intended to detect gross sensory deficits, including the visual placing response, Preyer reflex, and tail pinch. Many procedures have been developed for assessing pain perception (e.g., Ankier, 1974 under paragraph (f)(1) of this section; D'Amour and Smith 1941 under paragraph (f)(3) of this section; Evans 1971 under paragraph (f)(6) of this section).

(e) *Data reporting and evaluation.* In addition to the reporting requirements specified under 40 CFR part 792 subpart J the final test report must include the following information.

(1) *Description of system and test methods.* (i) A detailed description of the procedures used to standardize observation, including the arena and operational definitions for scoring observations.

(ii) Positive control data from the laboratory performing the test that demonstrate the sensitivity of the procedures being used. Historic data may be used if all aspects of the experimental protocol are the same, including personnel.

(2) *Results.* The following information must be arranged by test group dose level.

(i) In tabular form, data for each animal must be provided showing:

(A) Its identification number.

(B) Its body weight and score on each sign at each observation time, the time and cause of death (if appropriate).

(ii) Summary data for each group must include:

(A) The number of animals at the start of the test.

(B) The number of animals showing each observation score at each observation time.

(C) The percentage of animals showing each abnormal sign at each observation time.

(D) The mean and standard deviation for each continuous endpoint at each observation time.

(3) *Evaluation of data.* The findings of a functional observational battery should be evaluated in the context of preceding and/or concurrent toxicity studies and any correlative histopathological findings. The evaluation shall include the relationship between the doses of the test substance and the presence or absence, incidence and severity, of any neurotoxic effects. The evaluation should include appropriate statistical analyses. Choice of analyses should consider tests appropriate to the experimental design and needed adjustments for multiple comparisons.

(f) *References.* For additional background information on this test guideline the following references should be consulted:

(1) Ankier, S.I. ''New hot plate tests to quantify antinociceptic and narcotic antagonist activities,'' *European Journal of Pharmacology*, 27: 1–4 (1974).

(2) Coughenour, L.L., McLean, J.R. and Parker, R.B. ''A new device for the rapid

measurement of impaired motor function in mice,'' *Pharmacology, Biochemistry and Behavior, 6:* 351–353 (1977).

(3) D'Amour, F.E., Smith, D.L. ''A method for determining loss of pain sensation,'' *Journal of Pharmacology and Experimental Therapeutics, 72:* 74–79 (1941).

(4) Deuel, R.K. ''Determining sensory deficits in animals,'' *Methods in Psychobiology* Ed. Myers R.D. (New York: Academic Press, 1977) pp. 99–125.

(5) Edwards, P.M., Parker, V.H. ''A simple, sensitive and objective method for early assessment of acrylamide neuropathy in rats,'' *Toxicology and Applied Pharmacology, 40:* 589–591 (1977).

(6) Evans, W.O. ''A new technique for the investigation of some analgesic drugs on reflexive behavior in the rat,'' *Psychopharmacologia, 2:* 318–325 (1961).

(7) Irwin, S. ''Comprehensive observational assessment: Ia. A systematic quantitative procedure for assessing the behavioral and physiologic state of the mouse,'' *Psychopharmacologia, 13:* 222–257 (1968).

(8) Marshall, J.F., Turner, B.H., Teitlbaum, P. ''Sensory neglect produced by lateral hypothalamic damage,'' *Science, 174:* 523–525 (1971).

(9) Meyer, O.A., Tilson, H.A., Byrd, W.C., Riley, M.T. ''A method for the routine assessment of fore- and hindlimb grip strength of rats and mice,'' *Neurobehavioral Toxicology, 1:* 233–236 (1979).

[50 FR 39397, Sept. 27, 1985, as amended at 52 FR 19082, May 20, 1987]

§ 798.6200 Motor activity.

(a) *Purpose*—(1) *General.* In the assessment and evaluation of the toxic characteristics of a substance, determination of the effects of administration of the substance on motor activity is useful when neurotoxicity is suspected.

(2) *Acute Motor Activity Test.* The purpose of the acute motor activity test is to examine changes in motor activity occurring over a range of acute exposure levels. These changes may then be evaluated in the context of changes occurring in other organ systems. This test is an initial step in determining the potential of a substance to produce acute neurotoxicity and may be used to screen members of a class of substances for known neurotoxicity, and/or to establish a dosage regimen prior to the initiation of subchronic neurotoxicity testing.

(3) *Subchronic Motor Activity Test.* The purpose of the subchronic motor activity test is to determine whether the repeated administration of a suspected neurotoxicant results in changes in motor activity. These changes may be evaluated in the context of changes occurring in other organ systems. This test is an initial step in determining the potential of a substance to produce subchronic neurotoxicity.

(b) *Definitions.* (1) Neurotoxicity is the adverse effect on the structure or function of the central and/or peripheral nervous system related to exposure to a chemical substance.

(2) Motor activity is any movement of the experimental animal.

(3) A toxic effect is an adverse change in the structure or function of an experimental animal as a result of exposure to a chemical substance.

(c) *Principle of the test method.* The test substance is administered to several groups of experimental animals, one dose being used per group. Measurements of motor activity are made. The exposure levels at which significant changes in motor activity are produced are compared to those levels which produce toxic effects not originating in the central and/or peripheral nervous system.

(d) *Test procedures*—(1) *Animal selection*—(i) *Species and strain.* Testing shall be performed in a laboratory rat or mouse. The choice of species should take into consideration such factors as the comparative metabolism of the chemical and species sensitivity to the toxic effects of the test substance, as evidenced by the results of other studies, the potential for combined studies, and the availability of other toxicity data for the species.

(ii) *Age.* Young adult animals (at least 42 days old for rat or mouse) should be used.

(iii) *Sex.* (A) Equal numbers of animals of each sex are required for each dose level for the motor activity test.

(B) The females shall be nulliparous and nonpregnant.

(2) *Number of animals.* Animals shall be randomly assigned to test and control groups. Each test or control group must be designed to contain a sufficient number of animals at the completion of the study to detect a 40 percent change in activity of the test groups relative to the control group with 90 percent power at the 5 percent level. For most designs, calculations can be

made according to Dixon and Massey (1957) under paragraph (f)(1) of this section, Neter and Wasserman (1974) under paragraph (f)(5) of this section, Sokal and Rohlf (1969) under paragraph (f)(9) of this section, or Jensen (1972) under paragraph (f)(3) of this section.

(3) *Control groups.* (i) A concurrent control group is required. This group must be an untreated group, or, if a vehicle is used in administering the test substance, a vehicle control group. If the toxic properties of the vehicle are not known or cannot be made available, both untreated and vehicle control group are required.

(ii) Positive control data are required to demonstrate the sensitivity and reliability of the activity measuring device and testing procedure. These data should demonstrate the ability to detect increases or decreases in activity and to generate a dose-effect curve or its equivalent using three values of the dose or equivalent independent variable. A single administration of the dose (or equivalent) is sufficient. It is recommended that chemical exposure be used to collect positive control data. Positive control data shall be collected at the time of the test study unless the laboratory can demonstrate the adequacy of historical data for this purpose.

(iii) A satellite group may be treated with the high dose level for 90 days and observed for reversibility, persistence or delayed occurrence of toxic effects for a post-treatment period of appropriate length, normally not less than 28 days.

(4) *Dose levels and dose selection.* At least 3 doses, equally spaced on a log scale (e.g., ½ log units) over a range of at least 1 log unit shall be used in addition to a zero dose or vehicle administration. The data should be sufficient to produce a dose-effect curve.

(i) The highest dose shall produce (A) clear effects on motor activity or (B) life-threatening toxicity.

(ii) The data from the lower doses must show either (A) graded dose-dependent effects at 2 dose levels or (B) no effects at 2 dose levels, respectively.

(5) *Duration of testing.* The duration of exposure will be specified in the test rule.

(6) *Route of administration.* The test substance shall be administered by the method specified in the test rule. This will usually be the route most closely approximating the route of human exposure. The exposure protocol shall conform to that outlined in the appropriate acute or subchronic toxicity study guideline.

(7) *Combined protocol.* The tests described herein may be combined with any other toxicity study, as long as none of the requirements of either are violated by the combination.

(8) *Study conduct*—(i) *General.* Motor activity must be monitored by an automated activity recording apparatus. The device used must be capable of detecting both increases and decreases in activity, i.e. baseline activity as measured by the device must not be so low as to preclude decreases nor so high as to preclude increases. Each device shall be tested by standard procedure to ensure, to the extent possible, reliability of operation across devices and across days for any one device. In addition, treatment groups must be balanced across devices. Each animal shall be tested individually. The test session shall be long enough for motor activity to approach asymptotic levels by the last 20 percent of the session for most treatments and animals. All sessions should have the same duration. Treatment groups shall be counter-balanced across test times. Effort should be made to ensure that variations in the test conditions are minimal and are not systematically related to treatment. Among the variables which can affect motor activity are sound level, size and shape of the test cage, temperature, relative humidity, lighting conditions, odors, use of home cage or novel test cage and environmental distractions. Tests shall be executed by an appropriately trained individual.

(ii) *Acute.* Testing shall be timed to include the time of peak signs.

(iii) *Subchronic.* All animals shall be tested prior to initiation of exposure and at 30 ±2, 60 ±2 and 90 ±2 days during the exposure period. Testing shall occur prior to the daily exposure. Animals shall be weighed on each test day and at least once weekly during the exposure period.

(e) *Data reporting and evaluation.* In addition to the reporting requirements specified under 40 CFR part 792, subpart J the final test report must include the following information:

(1) *Description of system and test methods.* (i) Positive control data from the laboratory performing the test which demonstrate the sensitivity of the procedure being used.

(ii) Procedures for calibrating and assuring the equivalence of devices and balancing treatment groups.

(2) *Results.* The following information must be arranged by test group (dose level).

(i) In tabular form, data must be provided showing for each animal:

(A) Its identification number.

(B) Body weight, total session activity counts, and intrasession subtotals for each date measured.

(ii) Group summary data should also be reported.

(3) *Evaluation of data.* An evaluation of the test results (including statistical analysis comparing total activity counts at the end of exposure of treatment vs control animals must be made and supplied. This submission must include dose-effect curves for motor activity expressed as activity counts.

(f) *References.* For additional background information on this test guideline the following references should be consulted:

(1) Dixon, W.J., Massey, E.J. *Introduction to Statistical Analysis* 2nd Ed. (New York: McGraw-Hill, 1957).

(2) Finger, F.W. ''Measuring behavioral activity,'' *Methods in Psychobiology* Vol. 2. Ed. R.D. Myers (New York: Academic, 1972) pp. 1–19.

(3) Jensen, D.R. ''Some simultaneous multivariate procedures using Hotelling's T^2 Statistics,'' *Biometrics,* 28:39–53 (1972).

(4) Kinnard, E.J. and Watzman, N. ''Techniques utilized in the evaluation of psychotropic drugs on animals activity,'' Journal of Pharmaceutical Sciences, 55:995–1012 (1966).

(5) Neter, J. and Wasserman, W. *Applied Linear Statistical Models.* Homewood, Richard D. Irwin, Inc., 1974.

(6) Reiter, L.E. ''Use of activity measures in behavioral toxicology,'' *Environmental Health Perspectives,* 26:9–20 (1978).

(7) Reiter, L.W. and MacPhail, R.C. ''Motor Activity: A survey of methods with potential use in toxicity testing,'' *Neurobehavioral Toxicology,* 1: Suppl. 1, 53–66 (1979).

(8) Robbins, T.W. ''A critique of the methods available for the measurement of spontaneous motor activity,'' *Handbook of Psychopharmacology.* Vol. 7. Eds. Iversen, L.L., Iversen, D.S., Snyder, S.H. (New York: Plenum, 1977) pp. 37–82.

(9) Sokal, R.P. and Rohlf, E.J. *Biometry.* (San Francisco: W.H. Freeman and Co., 1969).

[50 FR 39397, Sept. 27, 1985, as amended at 52 FR 19082, May 20, 1987]

§ 798.6400 Neuropathology.

(a) *Purpose.* The techniques in this guideline are designed to develop data on morphologic changes in the nervous system for chemical substances and mixtures subject to such testing under the Toxic Substances Control Act. The data will detect and characterize morphologic changes, if and when they occur, and determine a no-effect level for such changes. Neuropathological evaluation should be complemented by other neurotoxicity studies, e.g. behavioral and neurophysiological studies. Neuropathological evaluation may be done following acute, subchronic or chronic exposure.

(b) *Definition.* Neurotoxicity or a neurotoxic effect is an adverse change in the structure or function of the nervous system following exposure to a chemical agent.

(c) *Principle of the test method.* The test substance is administered to several groups of experimental animals, one dose being used per group. The animals are sacrificed and tissues in the nervous system are examined grossly and prepared for microscopic examination. Starting with the highest dosage level, tissues are examined under the light microscope for morphologic changes, until a no effect level is determined. In cases where light microscopy has revealed neuropathology, the no effect level may be confirmed by electron microscopy.

(d) *Test procedure*—(1) *Animal selection*—(i) *Species and strain.* Testing shall be performed in the species being used in other tests for neurotoxicity. This will generally be the laboratory rat. The choice of species shall take into consideration such factors as the comparative metabolism of the chemical and species sensitivity to the toxic effects of the test substance, as evidenced by the results of other studies, the potential for combined studies, and the availability of other toxicity data for the species.

(ii) *Age.* Animals shall be young adults (150–200 gm for rats) at the start of exposure.

(iii) *Sex.* Both sexes shall be used unless it is demonstrated that one sex is refractory to the effects.

(2) *Number of animals.* A minimum of six animals per group shall be used. The tissues from each animal shall be examined separately. It is recomse (iv)mended that ten animals per group be used.

(3) *Control groups.* (i) A concurrent control group(s) is (are) required. This group must be an untreated control group or, if a vehicle is used in administering the test substance, a vehicle control group. If the vehicle used has a known or potential toxic property, both untreated and vehicle control groups are required.

(ii) A satellite group of animals may be treated with the high level for 90 days and observed for reversibility, persistence, or delayed occurrence of toxic effects for a post-treatment period of appropriate length; normally not less than 28 days.

(4) *Dose levels and dose selection.* At least 3 doses, equally spaced on a log scale (e.g., ½ log units) over a range of at least 1 log unit shall be used in addition to a zero dose or vehicle administration. The data should be sufficient to produce a dose-effect curve.

(i) The highest dose shall produce (A) clear behavioral effects or (B) life-threatening toxicity.

(ii) The data from the lower doses must show either (A) graded dose-dependent effects at two dose levels or (B) no effects at two dose levels, respectively.

(5) *Duration of testing.* The exposure duration will be specified in the test rule. This will generally be 90 days exposure.

(6) *Route of administration.* The test substance shall be administered by a route specified in the test rule. This will generally be the route most closely approximating the route of human exposure. The exposure protocol shall conform to that outlined in the appropriate acute or subchronic toxicity guideline.

(7) *Combined protocol.* The tests described herein may be combined with any other toxicity study, as long as none of the requirements of either are violated by the combination.

(8) *Study conduct*—(i) *Observation of animals.* All toxicological (e.g., weight loss) and neurological signs (e.g., motor disturbance) shall be recorded frequently enough to observe any abnormality, and not less than weekly.

(ii) *Sacrifice of animals*—(A) *General.* The goal of the techniques outlined for sacrifice of animals and preparation of tissues is preservation of tissues morphology to simulate the living state of the cell.

(B) *Perfusion technique.* Animals shall be perfused *in situ* by a generally recognized technique. For fixation suitable for light or electronic microscopy, saline solution followed by buffered 2.5 percent glutaraldehyde or buffered 4.0 percent paraformaldehyde, is recommended. While some minor modifications or variations in procedures are used in different laboratories, a detailed and standard procedure for vascular perfusion may be found in the text by Zeman and Innes (1963) under paragraph (f)(7) of this section, Hayat (1970) under paragraph (f)(3) of this section, and by Spencer and Schaumburg (1980) under paragraph (f)(6) of this section. A more sophisticated technique is described by Palay and Chan-Palay (1974) under paragraph (f)(4) of this section.

(C) *Removal of brain and cord.* After perfusion, the bonystructure (cranium and vertebral column) shall be exposed. Animals shall then be stored in fixative-filled bags at 4 °C for 8-12 hours. The cranium and vertebral column shall be removed carefully by trained technicians without physical damage of the brain and cord. Detailed dissection procedures may be found in the text by Palay and Chan-Palay (1974) under paragraph (f)(4) of this section. After removal, simple measurement of the size (length and width) and weight of the whole brain (cerebrum, cerebellum, pons-medulla) shall be made. Any abnormal coloration or discoloration of the brain and cord shall also be noted and recorded.

(D) *Sampling.* Unless a given test rule specifies otherwise, cross-sections of the following areas shall be examined: The forebrain, the center of the cerebrum, the midbrain, the cerebellum

and pons, and the medulla oblongata; the spinal cord at cervical and lumbar swelling (C_3–C_6 and L_1–L_4); Gasserian ganglia, dorsal root ganglia (C_3–C_6, L_1–L_4), dorsal and ventral root fibers (C_3–C_6, L^1–L_4), proximal sciatic nerve (mid-thigh and sciatic notch), sural nerve (at knee), and tibial nerve (at knee). Other sites and tissue elements (e.g.. gastrocnemius muscle) should be examined if deemed necessary. Any observable gross changes shall be recorded.

(iii) *Specimen storage.* Tissue samples from both the central and peripheral nervous system shall be further immersion fixed and stored in appropriate fixative (e.g., 10 percent buffered formalin for light microscopy; 2.5 percent buffered gluteraldehyde or 4.0 percent buffered paraformaldehyde for electron microscopy) for future examination. The volume of fixative versus the volume of tissues in a specimen jar shall be no less than 25:1. All stored tissues shall be washed with buffer for at least 2 hours prior to further tissue processing.

(iv) *Histopathology examination.* (A) *Fixation.* Tissue specimens stored in 10 percent buffered formalin may be used for this purpose. All tissues must be immersion fixed in fixative for at least 48 hours prior to further tissue processing.

(B) *Dehydration.* All tissue specimens shall be washed for at least 1 hour with water or buffer, prior to dehydration. (A longer washing time is needed if the specimens have been stored in fixative for a prolonged period of time.) Dehydration can be performed with increasing concentration of graded ethanols up to absolute alcohol.

(C) *Clearing and embedding.* After dehydration, tissue specimens shall be cleared with xylene and embedded in paraffin or paraplast. Multiple tissue specimens (e.g. brain, cord, ganglia) may be embedded together in one single block for sectioning. All tissue blocks shall be labelled showing at least the experiment number, animal number, and specimens embedded.

(D) *Sectioning.* Tissue sections, 5 to 6 microns in thickness, shall be prepared from the tissue blocks and mounted on standard glass slides. It is recommended that several additional sections be made from each block at this time for possible future needs for special stainings. All tissue blocks and slides shall be filed and stored in properly labeled files or boxes.

(E) *Histopathological techniques.* Although the information available for a given chemical substance may dictate test-rule specific changes, the following general testing sequence is proposed for gathering histopathological data:

(*1*) *General staining.* A general staining procedure shall be performed on all tissue specimens in the highest treatment group. Hematoxylin and eosin (H&E) shall be used for this purpose. The staining shall be differentiated properly to achieve bluish nuclei with pinkish background.

(*2*) *Special stains.* Based on the results of the general staining, selected sites and cellular components shall be further evaluated by the use of specific techniques. If H&E screening does not provide such information, a battery of stains shall be used to assess the following components in all appropriate required samples: neuronal body (e.g.. Einarson's gallocyanin), axon (e.g., Bodian), myelin sheath (e.g.. Kluver's Luxol Fast Blue) and neurofibrils (e.g.. Bielchosky). In addition, peripheral nerve fiber teasing shall be used. Detailed staining methodology is available in standard histotechnological manuals such as AFIP (1968) under paragraph (f)(1) of this section, Ralis et al. (1973) under paragraph (f)(5) of this section, and Chang (1979) under paragraph (f)(2) of this section. The nerve fiber teasing technique is discussed in Spencer and Schaumberg (1980) under paragraph (f)(6) of this section. A section of normal tissue shall be included in each staining to assure that adequate staining has occurred. Any changes shall be noted and representative photographs shall be taken. If a lesion(s) is observed, the special techniques shall be repeated in the next lower treatment group until no further lesion is detectable.

(*3*) *Alternative technique.* If the anatomical locus of expected neuro-pathology is well-defined, epoxy-embedded sections stained with toluidine blue may be used for small sized tissue samples. This technique obviates the need

for special stains for cellular components. Detailed methodology is available in Spencer and Schaumberg (1980) under paragraph (f)(6) of this section.

(*4*) *Electron microscopy.* Based on the results of light microscopic evaluation, specific tissue sites which reveal a lesion(s) shall be further evaluated by electron microscopy in the highest treatment group which does not reveal any light microscopic lesion. If a lesion is observed, the next lower treatment group shall be evaluated until no significant lesion is found. Detailed methodology is available in Hayat (1970) under paragraph (f)(3) of this section.

(F) *Examination—*(*1*) *General.* All stained microscopic slides shall be examined with a standard research microscope. Examples of cellular alterations (e.g., neuronal vacuolation, degeneration, and necrosis) and tissue changes (e.g., gliosis, leukocytic infiltration, and cystic formation) shall be recorded and photographed.

(*2*) *Electron microscopy.* Since the size of the tissue samples that can be examined is very small, at least 3 to 4 tissue blocks from each sampling site must be examined. Tissue sections must be examined with a transmission electron microscope. Three main categories of structural changes must be considered:

(*i*) *Neuronal body.* The shape and position of the nucleus and nucleolus as well as any change in the chromatin patterns shall be noted. Within the neuronal cytoplasm, cytoplasmic organelles such as mitochondria, lysosomes, neurotubules, neurofilaments, microfilaments, endoplasmic reticulum and polyribosomes (Nissl substance), Golgi complex, and secretory granules shall be examined.

(*ii*) *Neuronal processes.* The structural integrity or alterations of dendrites, axons (myelinated and unmyelinated), myelin sheaths, and synapses shall be noted.

(*iii*) *Supporting cells.* Attention must also be paid to the number and structural integrity of the neuroglial elements (oligodendrocytes, astrocytes, and microglia) of the central nervous system, and the Schwann cells, satellite cells, and capsule cells of the peripheral nervous system. Any changes in the endothelial cells and ependymal lining cells shall also be noted whenever possible. The nature, severity, and frequency of each type of lesion in each specimen must be recorded. Representative lesions must be photographed and labeled appropriately.

(e) *Data collection, reporting, and evaluation.* In addition to information meeting the requirements stated under 40 CFR part 792 subpart J, the following specific information shall be reported:

(1) *Description of test system and test methods.* A description of the general design of the experiment shall be provided. This shall include a short justification explaining any decisions where professional judgment is involved such as fixation technique and choice of stains.

(2) *Results.* All observations shall be recorded and arranged by test groups. This data may be presented in the following recommended format:

(i) *Description of signs and lesions for each animal.* For each animal, data must be submitted showing its identification (animal number, treatment, dose, duration), neurologic signs, location(s) nature of, frequency, and severity of lesion(s). A commonly-used scale such as 1+, 2+, 3+, and 4+ for degree of severity ranging from very slight to extensive may be used. Any diagnoses derived from neurologic signs and lesions including naturally occurring diseases or conditions, should also be recorded.

(ii) *Counts and incidence of lesions, by test group.* Data shall be tabulated to show:

(A) The number of animals used in each group, the number of animals displaying specific neurologic signs, and the number of animals in which any lesion was found;

(B) The number of animals affected by each different type of lesion, the average grade of each type of lesion, and the frequency of each different type and/or location of lesion.

(iii) *Evaluation of data.* (A) An evaluation of the data based on gross necropsy findings and microscopic pathology observations shall be made and supplied. The evaluation shall include the relationship, if any, between the animal's exposure to the test substance and the frequency and severity of the lesions observed.

(B) The evaluation of dose-response, if existent, for various groups shall be given, and a description of statistical method must be presented. The evaluation of neuropathology data should include, where applicable, an assessment in conjunction with other neurotoxicity studies performed (eg. electrophysiological, behavioral, neurochemical).

(f) *References.* For additional background information on this test guideline the following references should be consulted:

(1) AFIP. *Manual of Histologic Staining Methods.* (New York: McGraw-Hill (1968).

(2) Chang, L.W. *A Color Atlas and Manual for Applied Histochemistry.* (Springfield, IL: Charles C. Thomas, 1979).

(3) Hayat, M.A. ''Vol. 1. Biological applications,'' *Principles and techniques of electron microscopy.* (New York: Van Nostrand Reinhold, 1970)

(4) Palay S.L., Chan-Palay, V. *Cerebellar Cortex: Cytology and Organization.* (New York: Springer-Verlag, 1974).

(5) Ralis, H.M., Beesley, R.A., Ralis, Z.A. *Techniques in Neurohistology.* (London: Butterworths, 1973).

(6) Spencer, P.S., Schaumburg, H.H. (eds). *Experimental and Clinical Neurotoxicology.* (Baltimore: Williams and Wilkins, 1980).

(7) Zeman, W., JRM Innes, J.R.M. *Craigie's Neuroanatomy of the Rat.* (New York: Academic, 1963).

[50 FR 39397, Sept. 27, 1985, as amended at 52 FR 19082, May 20, 1987]

§ 798.6500 Schedule-controlled operant behavior.

(a) *Purpose.* (1) In the assessment and evaluation of the potential human health effects of substances, it may be necessary to test for functional neurotoxic effects. Substances that have been observed to produce neurotoxic signs in other toxicity studies (e.g. CNS depression or stimulation), as well as substances with a structural similarity to known neurotoxicants should be evaluated for these effects.

(2) This guideline defines procedures for conducting studies of schedule-controlled operant behavior, one way of evaluating functional neurotoxic effects (Dews, 1972 under paragraph (f)(1) of this section; NAS 1975, 1977, 1982 under paragraphs (f)(4), (5) and (6) of this section). Our purpose is to evaluate the effects of acute and repeated exposures on the rate and pattern of responding under schedules of reinforcement. Operant behavior tests may be used to evaluate many other aspects of behavior (Laties, 1978 under paragraph (f)(3) of this section). Additional tests may be necessary to completely assess the behavioral effects of any substance. Behavioral evaluation should be used in conjunction with neuropathologic evaluation and the evaluation of other toxic effects.

(b) *Definitions*—(1) *Neurotoxicity.* Neurotoxicity or a neurotoxic effect is an adverse change in the structure or function of the nervous system following exposure to a chemical agent. Behavioral toxicity is an adverse change in the functioning of the organism with respect to its environment following exposure to a chemical agent.

(2) *Operant, operant behavior, operant conditioning.* An operant is a class of behavioral responses which change or operates on the environment in the same way. Operant behavior is further distinguished as behavior which is modified by its consequences. Operant conditioning is the experimental procedure used to modify some class of behavior by reinforcement or punishment.

(3) *Schedule of reinforcement.* A schedule of reinforcement specifies the relation between behavioral responses and the delivery of reinforcers, such as food or water (Ferster and Skinner, 1957 under paragraph (f)(2) of this section). For example, a fixed ratio (FR) schedule requires a fixed number of responses to produce a reinforcer (e.g. FR 30). On a fixed interval (FI) schedule, the first response after a fixed period of time is reinforced (e.g. FI 5 minutes).

(c) *Principle of the test method.* Experimental animals are trained to perform under a schedule of reinforcement and measurements of their operant behavior are made. Several doses of the test substance are then administered according to the experimental design (between groups or within subjects) and the duration of exposure (acute or repeated). Measurements of the operant behavior are repeated. A descriptive and statistical evaluation of the data is made to evaluate the nature and extent of any changes in behavior in relation to exposures to the test substance.

Comparisons are made between any exposures that influence the behavior and exposures that have neuropathological effects or effects on other targets of the chemical.

(d) *Test procedures*—(1) *Experimental design.* These test procedures may be used to evaluate the behavior of experimental animals receiving either acute or repeated exposures. For acute exposure studies, either within-subject or between groups, experimental designs may be used. For repeated exposure studies, between groups designs should be used, but within subject comparisons (pre-exposure and post-exposure) are recommended and encouraged.

(2) *Animal selection*—(i) *Species.* (A) For most studies, the laboratory mouse or rat is recommended. Standard strains should be used.

(B) Under some circumstances other species may be recommended.

(ii) *Age.* Experimental animals should be young adults. Rats or mice should be at least 14 and 6 weeks old, respectively, prior to exposure.

(iii) *Sex.* (A) Approximately equal numbers of male and female animals are required for each dose level and control group.

(B) Virgin females should be used.

(iv) *Experimental history.* Animals should be experimentally and chemically naive.

(3) *Number of animals.* Six to twelve animals should be exposed to each level of the test substance and/or control procedure. If post exposure effects are examined, a separate group, 6 to 12 additional animals not sacrificed for pathology, will required in subchronic studies.

(4) *Control groups*—(i) *Untreated controls.* A concurrent ''sham'' exposure or vehicle control group or session (according to the design of the study) is required. The subjects should be treated similarly except that administration of the test substance is omitted.

(ii) *Positive controls.* Positive control data is required to demonstrate that the experimental procedures, under the specific conditions in the testing laboratory, are sensitive to substances known to affect operant behavior. Both increases and decreases in response rate should be demonstrated. Data based on acute exposures will be adequate. Data should be collected according to the same experimental design as that proposed for the test substance. Historical data on the procedure collected in the same species and under the same conditions in the testing laboratory may be acceptable, but the presentation of concurrent control data is strongly encouraged since it provides evidence that the test has remained sensitive.

(5) *Dose levels and dose selection.* At least 3 doses, equally spaced over a log scale (e.g., 10, 30, 100), over a range of at least 1 log unit shall be used in addition to a zero dose or vehicle administration. The data should be sufficient to produce a dose-effect curve.

(i) The highest dose shall produce: (A) Clear behavioral effects; or (B) life-threatening toxicity.

(ii) The data from the lower doses must show either: (A) Graded dose-dependent effects at 2 dose levels; or (B) no effects at 2 dose levels, respectively.

(6) *Duration of exposure.* The duration and frequency of exposure will be specified in the test rule.

(7) *Route of Administration.* The route of administration will also be specified in the test rule and will usually be identical to one of the anticipated or actual routes of human exposure. For some chemicals, another route (e.g. parenteral) may be justified. The exposure protocol should conform to that outlined in the appropriate acute or subchronic toxicity study guideline under subpart B or subpart C of this part.

(8) *Study conduct*—(i) *Apparatus.* Behavioral responses and the delivery of reinforcers shall be controlled and monitored by automated equipment located so that its operation does not provide unintended cues or otherwise interfere with the ongoing behavior. Individual chambers should be sound attenuated to prevent disruptions of behavior by external noise. The response manipulanda, feeders, and any stimulus devices should be tested before each session; these devices should periodically be calibrated.

(ii) *Chamber assignment.* Concurrent treatment groups should be balanced across chambers. Each subject should be tested in the chamber to which it is initially assigned.

(iii) *Deprivation and training.* (A) If a nonpreferred positive reinforcer is used, all subjects should be deprived of food until they reach a fixed percentage (e.g. 80 to 90 percent, commonly) of their ad libitum body weight or for a fixed period (e.g., 18 hours) prior to training. Deprivation should be kept constant throughout the study.

(B) Subjects must be trained until they display demonstrable stability in performance across days prior to exposure. One simple and useful criterion is a minimum number of sessions on the schedule and no systematic trend during the 5 days before exposure.

(C) Cumulative records of cumulative responding over time for each animal should be presented to demonstrate that the pattern of responding is representative of that generated by the schedule of reinforcement.

(iv) *Time, frequency, and duration of testing*—(A) *Time of testing.* All experimental animals should be tested at the same time of day and with respect to the time of exposure. For acute studies, testing should be performed when effects are estimated to peak, usually shortly after exposure. For subchronic studies, subjects should be tested prior to daily exposure in order to assess cumulative effects.

(B) *Frequency of testing.* The maintenance of stable operant behavior normally will require regular and frequent (e.g., 5 days a week) testing sessions. Animals should be weighed on each test day.

(C) *Duration of testing.* (*1*) Experimental sessions should be long enough to reasonably see the effects of exposure, but brief enough to be practical. Under most circumstances, a session length of 30–40 minutes should be adequate.

(*2*) If the nature or duration of effects following cessation of repeated exposure are a concern, animals from the high dose group should be tested following exposure for a suitable period of time.

(v) *Schedule selection.* The schedule of reinforcement chosen should generate response rates that may increase or decrease as a function of exposure. Many schedules of reinforcement can do this: a single schedule maintaining a moderate response rate; fixed-interval schedules, which engender a variety of response rates in each interval; or multiple schedules, where different components may maintain high and low response rates.

(e) *Data reporting and evaluation.* In addition to the reporting requirements specified under 40 CFR part 792, subpart J the final test report should contain the following information:

(1) *Description of system, test methods, experimental design, and control data.* (i) A description of the experimental chamber, programming equipment, data collection devices, and environmental conditions.

(ii) A description of the experimental design including counterbalancing procedures, and the stability criterion.

(iii) A description and statistical evaluation of positive control and other control data, including standard measures of central tendency, variability, coefficient of variation of response rates, and the slope of the dose-effect curve.

(2) *Results.* (i) Data for each animal should be arranged by test group in tabular form including the animal identification number, body weight, pre-exposure rate of responding, changes in response rate produced by the chemical, and group data for the same variables, including standard measures of central tendency, variability and coefficient of variation.

(ii) A description and statistical evaluation of the test results: With particular reference to the overall statistical procedures (e.g., parametric or nonparametric) dose-effect curve, and calculation of slope. Presentation of calculations is encouraged.

(f) *References.* For additional background information on this test guideline the following references should be consulted:

(1) Dews, P.B. ''Assessing the Effects of Drugs,'' *Methods in Psychobiology*, Vol. 2, Ed., R.D. Myers (New York: Academic Press, 1972) 83–124.

(2) Ferster, C.B. Skinner, B.F. Schedules of Reinforcement. (New York: Appleton-Century-Crofts, 1957).

(3) Laties, V.G. ''How Operant Conditioning can Contribute to Behavioral Toxicology,'' Environmental Health Perspectives, 28: 29–35 (1978).

(4) National Academy of Science. *Principles for Evaluating Chemicals in the Environment.*

(Washington, DC: National Academy of Sciences, 1975).

(5) National Academy of Science. *Principles and Procedures for Evaluating the Toxicity of Household Substances.* (Washington, DC: National Academy of Sciences, 1977).

(6) National Academy of Science. ''Strategies to determine needs and priorities for toxicity testing,'' Appendix 3B. *Reference Protocol Guidelines For Neurobehavioral Toxicity Tests.* 2: 123–129 (1982).

§ 798.6560 Subchronic delayed neurotoxicity of organophosphorus substances.

(a) *Purpose.* In the assessment and evaluation of the toxic characteristics of organophosphorus substances the determination of subchronic delayed neurotoxicity may be carried out, usually after initial information on delayed neurotoxicity has been obtained by acute testing or by the demonstration of inhibition and aging of neurotoxic esterase in hen neural tissue. The subchronic delayed neurotoxicity test provides information on possible health hazards likely to arise from repeated exposures over a limited period of time. It will provide information on dose response and can provide an estimate of a non-effect level which can be of use for establishing safety criteria for exposure.

(b) *Definitions.* Subchronic delayed neurotoxicity is a prolonged, delayed-onset locomoter ataxia resulting from repeated daily administration of the test substance.

(c) *Principle of the test method.* Multiple dose levels of the test substance are administered orally to domestic hens *(Gallus gallus domesticus)* for 90 days. The animals are observed at least daily for behavioral abnormalities, locomotor ataxia and paralysis. Histopathological examination of selected neural tissues is undertaken at the termination of the test period.

(d) *Test procedures*—(1) *Animal selection.* The adult domestic laying hen, aged 8 to 14 months, is recommended. Standard size breeds and strains should be employed.

(2) *Number of animals.* Ten hens should be used for each treatment and control group.

(3) *Control group*—(i) *General.* A concurrent control group should be used. This group should be treated in a manner identical to the treated group, except that administration of the test substance is omitted.

(ii) *Reference substances.* If a positive control is used, a substance which is known to produce delayed neurotoxicity should be employed. Examples of such substances are triorthocresyl phosphate (TOCP) and leptophos.

(4) *Housing and feeding conditions.* Cages or enclosures which are large enough to permit free mobility of the hens and easy observation of gait should be used. Where the lighting is artificial, the sequence should be 12 hours light, 12 hours dark. Appropriate diets should be administered as well as an unlimited supply of drinking water.

(5) *Dose levels.* At least three dose levels should be used in addition to the control group(s). The highest dose level should result in toxic effects, preferably delayed neurotoxicity, but not produce an incidence of fatalities which would prevent a meaningful evaluation. The lowest dose level should not produce any evidence of toxicity.

(6) *Route of administration.* Oral dosing each day for at least 5 days per week should be carried out, preferably by gavage or administration of gelatine capsules.

(7) *Study conduct*—(i) *General.* Healthy young adult hens free from interfering viral diseases and medication and without abnormalities of gait should be acclimatized to the laboratory conditions for at least 5 days prior to randomization and assignment to treatment and control groups. The test or control substance should be administered and observations begun. All hens should be carefully observed at least once daily throughout the test period. Signs of toxicity should be recorded, including the time of onset, degree and duration. Observations should include, but not be limited to, behavioral abnormality, locomotor ataxia and paralysis. At least once a week the hens should be taken outside the cages and subjected to a period of forced motor activity, such as ladder climbing, in order to enhance the observation of minimal responses. The hens should be weighed weekly. Any moribund hens should be removed and sacrificed.

(ii) *Pathology*—(A) *Gross necropsy.* In the presence of clinical signs of delayed neurotoxicity useful information may be provided by gross necropsy.

(B) *Histopathology.* Tissues from all animals should be fixed *in situ,* using perfusion techniques. Sections should include medulla oblongata, spinal cord and peripheral nerves. The spinal cord sections should be taken from the upper cervical bulb, the mid-thoracic and lumbosacral regions. Sections of the proximal region of the tibial nerve and its branches and of the sciatic nerve should be taken. Sections should be stained with appropriate myelin and axon-specific stains. Microscopic examination should be carried out on all hens in the control and high-dose groups. Microscopic examination should also be carried out on hens in the low and intermediate dose groups when there is evidence of effects in the high-dose group.

(e) *Data reporting and evaluation*—(1) *Test report.* In addition to the reporting requirements specified under 40 CFR part 792, subpart J the final test report must include the following information:

(i) Toxic response data by group with a description of clinical manifestations of nervous system damage; where a grading system is used the criteria should be defined.

(ii) For each animal, time of death during the study or whether it survived to termination.

(iii) The day of observation of each abnormal sign and its subsequent course.

(iv) Body weight data.

(v) Necropsy findings for each animal, when performed.

(vi) A detailed description of all histopathological findings.

(vii) Statistical treatment of results, where appropriate.

(2) *Treatment of results.* (i) Data may be summarized in tabular form, showing for each test group the number of animals at the start of the test, the number of animals showing lesions or effects, the types of lesions or effects and the percentage of animals displaying each type of lesion or effect.

(ii) All observed results should be evaluated by an appropriate statistical method. Any generally accepted statistical method may be used; the statistical methods should be selected during the design of the study.

(3) *Evaluation of results.* The findings of a subchronic delayed neurotoxicity study should be evaluated in conjunction with the findings of preceding studies and considered in terms of the incidence and severity of observed neurotoxic effects and any other observed effects and histopathological findings in the treated and control groups. A properly conducted subchronic test should provide a satisfactory estimation of a no-effect level based on lack of clinical signs and histopathological changes.

(f) *References.* For additional background information on this test guideline the following references should be consulted:

(1) Abou-Donia, M.B. ''Organophosphorus ester-induced delayed neurotoxicity'' Annual Review of Pharmacology and Toxicology, 21:511–548 (1981).

(2) Abou-Donia, M.B., Pressing, S.H. ''Delayed neurotoxicity from continuous low-dose oral administration of leptophos to hens.'' *Toxicology and Applied Pharmacology,* 38:595–608 (1976).

(3) Baron, R.L. (ed). ''Pesticide Induced Delayed Neurotoxicity,'' Proceedings of a Conference, February 19–20, 1976, Washington, DC. U.S. Environmental Protection Agency. EPA Report No. 600/1–76–025, Washington, DC (1976).

(4) Cavanaugh, J.B. ''Peripheral neuropathy caused by chemical agents'' *Critical Reviews of Toxicity,* 2:365–417 CRC Press, Inc. (1973).

(5) Johannsen, F.R., Wright, P.L., Gordon, D.E., Levinskas, G.L., Radue, R.W., Graham, P.R. ''Evaluation of delayed neurotoxicity and dose-response relationship of phosphate esters in the adult hen,'' *Toxicology and Applied Pharmacology,* 41:291–304 (1977).

(6) Johnson, M.K. ''Organophosphorus esters causing delayed neurotoxic effects: mechanism of action and structure/activity studies,'' *Archives of Toxicology,* 34:259–288 (1975).

PART 799—IDENTIFICATION OF SPECIFIC CHEMICAL SUBSTANCE AND MIXTURE TESTING REQUIREMENTS

Subpart A—General Provisions

Sec.

799.1 Scope and purpose.
799.2 Applicability.
799.3 Definitions.

799.5 Submission of information.
799.10 Test standards.
799.11 Availability of test guidelines.
799.12 Test results.
799.17 Effects of non-compliance.
799.18 Chemicals subject of test rules or consent orders for which the testing reimbursement period has passed.
799.19 Chemical imports and exports.

Subpart B—Specific Chemical Test Rules

799.1053 Trichlorobenzenes.
799.1560 Diethylene glycol butyl ether and diethylene glycol butyl ether acetate.
799.1575 Diethylenetriamine (DETA).
799.1645 2-Ethylhexanol.
799.1700 Fluoroalkenes.
799.2155 Commercial hexane.
799.2325 Isopropanol.
799.2475 2-Mercaptobenzothiazole.
799.2700 Methyl ethyl ketoxime.
799.3300 Unsubstituted phenylenediamines.
799.4360 Tributyl phosphate.
799.4440 Triethylene glycol monomethyl ether.

Subpart C—Testing Consent Orders

799.5000 Testing consent orders for substances and mixtures with Chemical Abstract Service Registry Numbers.
799.5025 Testing consent orders for mixtures without Chemical Abstracts Service Registry Numbers.

Subpart D—Multichemical Test Rules

799.5055 Hazardous waste constituents subject to testing.
799.5075 Drinking water contaminants subject to testing.

Subpart E—Product Properties Test Guidelines

799.6755 TSCA partition coefficient (*n*-octanol/water), shake flask method.
799.6756 TSCA partition coefficient (*n*-octanol/water), generator column method.
799.6784 TSCA water solubility: Column elution method; shake flask method.
799.6786 TSCA water solubility: Generator column method.

Subparts F–G [Reserved]

Subpart H—Health Effects Test Guidelines

799.9110 TSCA acute oral toxicity.
799.9120 TSCA acute dermal toxicity.
799.9130 TSCA acute inhalation toxicity.
799.9135 TSCA acute inhalation toxicity with histopathology.
799.9305 TSCA Repeated dose 28–day oral toxicity study in rodents.
799.9310 TSCA 90-day oral toxicity in rodents.
799.9325 TSCA 90-day dermal toxicity.
799.9346 TSCA 90-day inhalation toxicity.
799.9355 TSCA reproduction/developmental toxicity screening test.
799.9365 TSCA combined repeated dose toxicity study with the reproduction/developmental toxicity screening test.
799.9370 TSCA prenatal developmental toxicity.
799.9380 TSCA reproduction and fertility effects.
799.9410 TSCA chronic toxicity.
799.9420 TSCA carcinogenicity.
799.9430 TSCA combined chronic toxicity/carcinogenicity.
799.9510 TSCA bacterial reverse mutation test.
799.9530 TSCA in vitro mammalian cell gene mutation test.
799.9537 TSCA in vitro mammalian chromosome aberration test.
799.9538 TSCA mammalian bone marrow chromosomal aberration test.
799.9539 TSCA mammalian erythrocyte micronucleus test.
799.9620 TSCA neurotoxicity screening battery.
799.9630 TSCA developmental neurotoxicity.
799.9748 TSCA metabolism and pharmacokinetics.
799.9780 TSCA immunotoxicity.

AUTHORITY: 15 U.S.C. 2603, 2611, 2625.

SOURCE: 49 FR 39817, Oct. 10, 1984, unless otherwise noted.

Subpart A—General Provisions

§ 799.1 Scope and purpose.

(a) This part identifies the chemical substances, mixtures, and categories of substances and mixtures for which data are to be developed, specifies the persons required to test (manufacturers, including importers, and/or processors), specifies the test substance(s) in each case, prescribes the tests that are required including the test standards, and provides deadlines for the submission of reports and data to EPA.

(b) This part requires manufacturers and/or processors of chemical substances or mixtures (''chemicals'') identified in subpart B to submit letters of intent to test, exemption applications, and study plans in accordance with EPA test rule development and exemption procedures contained in part 790 of this chapter and any modifications to such procedures contained in this part.

(c) This part requires manufacturers and/or processors of chemicals identified in subpart B to conduct tests and submit data in accordance with the test standards contained in this part in order to develop data on the health and environmental effects and other characteristics of these chemicals. These data will be used to assess the risk of injury to human health or the environment presented by these chemicals.

(d) This part contains certain TSCA test guidelines which are cross-referenced in the test rules contained in this part.

[49 FR 39817, Oct. 10, 1984, as amended at 62 FR 43824, Aug. 15, 1997]

§ 799.2 Applicability.

This part is applicable to each person who manufactures or intends to manufacture (including import) and/or to each person who processes or intends to process a chemical substance or mixture identified in subpart B for testing during the period commencing with the effective date of the specific chemical test rule until the end of the reimbursement period. Each set of testing requirements in subpart B specifies whether those requirements apply to manufacturers only, to processors only, or to both manufacturers and processors.

§ 799.3 Definitions.

The definitions in section 3 of the Toxic Substances Control Act (TSCA) and the definitions of § 790.3 of this chapter apply to this part.

§ 799.5 Submission of information.

Information (letters, study plans, reports) submitted to EPA under this part must bear the Code of Federal Regulations section number of the subject chemical test rule (e.g., § 799.1285 for Cumene) and must be addressed to the Document Control Office (7407), Office of Pollution Prevention and Toxics, U.S. Environmental Protection Agency, Room G–099, 1200 Pennsylvania Ave., NW., Washington, DC 20460.

[60 FR 34467, July 3, 1995]

§ 799.10 Test standards.

Testing required under subpart B must be performed using a study plan prepared according to the requirements of parts 790 and 792 of this chapter unless modified in specific chemical test rules in subpart B. All raw data, documentation, records, protocols, specimens and reports generated as a result of a study under subpart B must be developed, reported, and retained in accordance with TSCA Good Laboratory Practice Standards (GLP's) in part 792 of this chapter. These items must be made available during an inspection or submitted to EPA upon request by EPA or its authorized representative. Laboratories conducting testing for submission to the Agency in response to a test rule promulgated under section 4 of TSCA must adhere to the TSCA GLP's. Sponsors must notify the laboratory that the study is being conducted pursuant to TSCA section 4. Sponsors are also responsible for ensuring that laboratories conducting the test abide by the TSCA GLP standards. In accordance with § 792.12 of this chapter, a certification concerning adherence to the TSCA GLP's must be submitted to EPA.

§ 799.11 Availability of test guidelines.

(a) The TSCA and FIFRA guidelines for the various study plans are available from the National Technical Information Service (NTIS). Address and telephone number: National Technical Information Service, 5285 Port Royal Road, Springfield, VA 22161 (703–487–4650).

(b) The OECD guidelines for the various study plans are available from the following address: OECD Publication and Information Center, 1750 Pennsylvania Ave., NW., Washington, DC 20006 (202–724–1857).

§ 799.12 Test results.

Except as set forth in specific chemical test rules in subpart B of this part, a positive or negative test result in any of the tests required under subpart B is defined in the TSCA test guidelines published by NTIS.

§ 799.17 Effects of non-compliance.

Any person who fails or refuses to comply with any aspect of this part or part 790 is in violation of section 15 of TSCA. EPA will treat violations of

Good Laboratory Practice Standards as indicated in § 792.17 of this chapter.

§ 799.18 Chemicals subject of test rules or consent orders for which the testing reimbursement period has passed.

The following table lists substances and mixtures that have been the subjects of section 4 testing actions and for which the testing reimbursement period has terminated (sunset). The FEDERAL REGISTER citation in the table is for the final rule/consent order that includes the particular substance for which the sunset date listed in the table below applies. Section 12(b) export notification is no longer required for these substances and mixtures. Substances that are the subjects of two or more section 4 testing actions may have section 4 reimbursement or section 12(b) export notification requirements that have not sunset; see subparts B, C, and D of this part to determine if certain other section 4 testing requirements apply. Additionally, section 12(b) export notification may also be triggered by proposed or final action under TSCA section 5, 6, or 7 (in addition to final actions under section 4); see 40 CFR part 707, subpart D for further information regarding the TSCA section 12(b) export notification requirements.

CAS No.	Chemical Name	FR cite	Sunset dates
	C-9 Aromatic Hydrocarbon Fraction[1]	50 FR 20662, 5/17/85	Aug 13, 1994
62–53–3	Aniline	53 FR 31804, 8/19/88	July 27, 1994
71–55–6	1,1,1-Trichloroethane	49 FR 39810, 10/10/84	June 29, 1992
75–56–9	Propylene oxide	50 FR 48762, 11/27/85	Dec,21, 1992
78–87–5	1,2-Dichloropropane	52 FR 37138, 10/5/87	April 17, 1995
79–94–7	Tetrabromobisphenol-A	52 FR 25219, 7/6/87	Aug 24, 1994
80–05–7	Bisphenol A	51 FR 33047, 9/18/86	April 6, 1993
84–65–1	Anthraquinone	52 FR 21018, 6/4/87	Aug 21,1994
87–61–6	1,2,3-trichlorobenzene	51 FR 11728,4/7/86	Nov 13, 1993
88–74–4	2-nitroaniline	53 FR 31804, 8/19/88	Sept 19, 1994
92–52–4	1,1-Biphenyl	50 FR 37182, 9/12/85	March 15,1994
95–48–7	Ortho-cresols AKA 2-methylphenol	51 FR 15771, 4/28/86	Dec. 6, 1994
95–50–1	1,2-dichlorobenzene	51 FR 24657, 7/8/86	April 27, 1994
95–51–2	2-chloroaniline	53 FR 31804, 8/19/88	Sept 6, 1994
95–76–1	3,4-dichloroaniline	53 FR 31804, 8/19/88	Oct 2, 1994
95–94–3	1,2,4,5-tetrachlorobenzene	51 FR 24657,7/8/86	April 27, 1994
97–02–9	2,4-dinitroaniline	53 FR 31804, 8/19/88	Oct 19, 1993
98–82–8	Cumene	53 FR 28195, 7/27/88	March 11, 1995
99–30–9	2,6-dichloro-4-nitroaniline	53 FR 31804, 8/19/88	Aug 6, 1994
100–01–6	4-nitroaniline	53 FR 31804, 8/19/88	Sept 19, 1994
106–44–5	Para-cresols AKA 4-methylphenol	51 FR 15771, 4/28/86	Dec. 6, 1994
106–46–7	1,4-dichlorobenzene	51 FR 24657, 7/8/86	Jan 22, 1994
106–47–8	4-chloroaniline	53 FR 31804, 8/19/88	Oct 19, 1993
108–39–4	Meta-cresols AKA 3-methylphenol	51 FR 15771, 4/28/86	Dec. 6, 1994
108–90–7	Monochlorobenzene	51 FR 24657, 7/8/86	Nov 13, 1991
112–90–3	Oleylamine	52 FR 31962, 8/24/87	Nov 28, 1994
116–14–3	Tetrafluoroethene	52 FR 21516, 6/8/87	May 19, 1993
116–15–4	Hexafluoropropene	52 FR 21516, 6/8/87	Jan 22, 1994
123–31–9	Hydroquinone	50 FR 53145, 12/30/85	Dec. 11, 1994
149–57–5	2-Ethylhexanoic Acid	51 FR 40318, 11/6/86	June 19, 1993
328–84–7	3,4-Dichlorobenzotrifluoride	52 FR 23547, 6/23/87	Dec. 5, 1993

CAS No.	Chemical Name	FR cite	Sunset dates
25550–98–5	Diisodecyl Phenyl Phosphite	54 FR 8112, 2/24/89	May 21, 1995

[1] Only substances obtained from the reforming of crude petroleum.

[60 FR 31923, June 19, 1995]

§ 799.19 Chemical imports and exports.

Persons who export or who intend to export substances listed in subpart B or subpart C of this part are subject to the requirements of part 707 of this title.

[51 FR 23718, June 30, 1986]

Subpart B—Specific Chemical Test Rules

§ 799.1053 Trichlorobenzenes.

(a) *Identification of testing substance.* (1) 1,2,3- and 1,2,4-trichlorobenzenes, CAS Numbers 87–61–6 and 120–82–1 respectively, shall be tested in accordance with this section.

(2) The substances identified in paragraph (a)(1) of this section shall be 99 percent pure and shall be used as the test substances in each of the tests specified.

(3) For health effects testing required under paragraph (e) of this section, the test substance shall not contain more than 0.05 percent benzene and 0.05 percent hexachlorobenzene.

(b) *Persons required to submit study plans, conduct tests, and submit data.* (1) All persons who manufacture or process substances identified in paragraph (a)(1) of this section, other than an impurity, from May 21, 1986, to the end of the reimbursement period, shall submit a letter of intent to test or exemption applications and shall conduct tests, in accordance with part 792 of this chapter, and submit data as specified in this section, subpart A of this part and part 790 of this chapter for two-phase rulemaking.

(2) Persons subject to this section are not subject to the requirements of § 790.50(a) (2), (5), (6) and (b) and § 790.87(a)(1)(ii) of this chapter.

(3) Persons who notify EPA of their intent to conduct tests in compliance with the requirements of this section must submit plans for those tests no later than 30 days before the initiation of each of those tests.

(4) In addition to the requirements of § 790.87(a)(2) and (3) of this chapter, EPA will conditionally approve exemption applications for this rule if EPA has received a letter of intent to conduct the testing from which exemption is sought and EPA has adopted test standards and schedules in a final Phase II test rule.

(5) For health effects testing required under paragraph (e) of this section, all persons who manufacture (import) or process 1,2,4-trichlorobenzene, other than as an impurity, after the effective date of this rule (August 21, 1986) to the end of the reimbursement period shall submit letters of intent to conduct testing or exemption applications, submit study plans, conduct tests, and submit data as specified in this section, subpart A of this part, and parts 790 and 792 of this chapter for single-phase rulemaking.

(c) [Reserved]

(d) *Environmental effects testing.* 1,2,3- and 1,2,4-trichlorobenzenes shall be tested in accordance with this section.

(1) *Marine invertebrate acute toxicity testing*—(i) *Required testing.* Testing using measured concentrations, flow through or static renewal systems, and systems that control for evaporation of the test substance, shall be conducted for 1,2,3- and 1,2,4-trichlorobenzenes. Testing shall be conducted with mysid shrimp (*Mysidopis bahia*) to develop data on the acute toxicity of the above chlorobenzene isomers to marine invertebrates.

(ii) *Test standards.* The marine invertebrate (mysid shrimp, *Mysidopis bahia*) acute toxicity testing for 1,2,3- and 1,2,4-trichlorobenzenes shall be conducted in accordance with § 797.1930 of this chapter.

(iii) *Reporting requirements.* (A) The acute toxicity tests on marine invertebrates shall be completed and the final report submitted to EPA within 1 year of the effective date of the final Phase II test rule.

(B) An interim progress report shall be submitted to the Agency within 6 months after the effective date of the final Phase II rule.

(2) *Marine fish acute toxicity testing*—(i) *Required testing.* Testing using measured concentrations, flow through systems, and systems that control for evaporation of the test substance shall be conducted for 1,2,3-trichlorobenzene. Testing shall be conducted with Silversides (*Menidia menidia*) to develop data on the acute toxicity of 1,2,3-trichlorobenzene to saltwater fish.

(ii) *Test standard.* The marine fish (silverside minnow, *Menida menidia*) acute toxicity test shall be conducted for 1,2,3-trichlorobenzene in accordance with § 797.1400 of this chapter.

(iii) *Reporting requirements.* (A) The marine fish (silversides minnow, *Menidia menidia*) acute toxicity test shall be completed and the final results submitted within 1 year of the effective date of the Phase II final test rule.

(B) An interim progress report shall be submitted to EPA 6 months after the effective date of the final Phase II rule.

(3) *Freshwater fish acute toxicity testing*—(i) *Required testing.* Testing using measured concentrations, flow through systems, and systems that control evaporation of the test substance shall be conducted for 1,2,3-trichlorobenzene. A 96-hour LC50 test shall be conducted with the fathead minnow (*Pimephales promelas*) to develop data on the acute toxicity of 1,2,3-trichlorobenzene to freshwater fish.

(ii) *Test standard.* The freshwater fish (fathead minnow, *Pimephales promelas*) acute toxicity test shall be conducted for 1,2,3-trichlorobenzene in accordance with § 797.1400 of this chapter.

(iii) *Reporting requirements.* (A) The freshwater fish acute toxicity study shall be completed and the final report submitted to EPA within 1 year of the effective date of the final Phase II test rule.

(B) An interim progress report shall be submitted to EPA 6 months after the effective date of the final Phase II rule.

(4) *Freshwater invertebrate acute toxicity testing*—(i) *Required testing.* Testing using measured concentrations, flow through or static renewal systems, and systems that control for evaporation of the test substance shall be conducted for 1,2,3-trichlorobenzene. A 96-hour EC50 shall be conducted for one species of *Grammarus* to develop data on the acute toxicity of 1,2,3-trichlorobenzene to aquatic freshwater invertebrates.

(ii) *Test standard.* The freshwater invertebrate (Gammarus sp.) acute toxicity test shall be conducted for 1,2,3-trichlorobenzene in accordance with § 795.120 of this chapter.

(iii) *Reporting requirements.* (A) The freshwater invertebrate acute toxicity test shall be completed and the final report submitted to EPA within 411 days of the effective date of the final Phase II rule.

(B) An interim progress report shall be submitted to EPA 6 months after the effective date of the final Phase II rule.

(5) *Mysid shrimp chronic toxicity testing*—(i) *Required testing.* Testing using measured concentrations, flow through or static renewal systems, and systems that control for evaporation of the test substance shall be conducted for 1,2,4-trichlorobenzene. Testing shall be conducted with mysid shrimp (*Mysidopsis bahia*) to develop data on the chronic toxicity of 1,2,3-trichlorobenzene, should the acute LC50 of this chemical to mysid shrimp be determined to be less than 1 ppm.

(ii) *Test standards.* The mysid shrimp (*Mysidopis bahia*) chronic toxicity test shall be conducted for 1,2,4-trichlorobenzene in accordance with § 797.1950 of this chapter. Testing shall also be conducted according to § 797.1950 for 1,2,3-trichlorobenzene should the results of testing required by (d)(1)(ii) of this section yield an acute LC50 for this chemical substance of less than 1 ppm.

(iii) *Reporting requirements.* (A) The mysid shrimp chronic toxicity test for 1,2,4-trichlorobenzene shall be completed and the final report submitted to EPA within 1 year of the effective date of the final Phase II rule. The mysid shrimp chronic toxicity test for 1,2,3-trichlorobenzene, (required if the LC50 is less than 1 ppm), shall be completed and final report submitted to EPA within 15 months of the effective date of the final Phase II rule.

(B) Progress reports shall be submitted to EPA at 6-month intervals, beginning 6 months after of the effective date of the final Phase II rule and until the final report is submitted to EPA.

(e) *Health effects testing*—(1) *Oncogenicity*—(i) *Required testing.* (A) A test for oncogenic effects shall be conducted with 1,2,4-TCB in accordance with § 798.3300 of this chapter.

(B) The route of administration for the oncogenicity testing for 1,2,4-TCB shall be via the animal feed.

(C) Two rodent species shall be used and one shall be the Fischer-344 rat.

(ii) *Reporting requirements.* (A) The oncogenicity test shall be completed and the final results submitted to EPA by June 30, 1994.

(B) Progress reports shall be submitted to the Agency every 6 months after the effective date of the final rule.

(2) [Reserved]

(f) [Reserved]

(g) *Effective date.* (1) The effective date of the final phase II rule is August 14, 1987, except for paragraphs (d)(4)(iii)(A) and (e)(1)(ii)(A) of this section. The effective date for paragraph (d)(4)(iii)(A) of this section is March 1, 1990. The effective date for paragraph (e)(1)(ii)(A) of this section is June 12, 1992.

(2) The guidelines and other test methods cited in this rule are referenced as they exist on the effective date of the final rule.

[51 FR 11737, Apr. 7, 1986; 51 FR 18444, May 20, 1986, as amended at 51 FR 24667, July 8, 1986; 52 FR 24465, July 1, 1987; 55 FR 7327, Mar. 1, 1990; 57 FR 24960, June 12, 1992; 57 FR 27845, June 22, 1992; 58 FR 34205, June 23, 1993]

§ 799.1560 Diethylene glycol butyl ether and diethylene glycol butyl ether acetate.

(a) *Identification of test substances.* (1) Diethylene glycol butyl ether (DGBE), CAS Number 112–34–5, and diethylene glycol butyl ether acetate (DGBA), CAS Number 124–17–4, shall be tested in accordance with this section.

(2) DGBE of at least 95 percent purity and DGBA of at least 95 percent purity shall be used as the test substances.

(b) *Persons required to submit study plans, conduct tests, and submit data.* All persons who manufacture (including import) or process or intend to manufacture or process DGBE and/or DGBA, other than as an impurity, after April 11, 1988, to the end of the reimbursement period shall submit letters of intent to conduct testing, submit study plans and conduct tests, and submit data, or submit exemption applications as specified in this section, subpart A of this part, and parts 790 and 792 of this chapter for single-phase rulemaking. Persons who manufacture or process DGBE are subject to the requirements to test DGBE in this section. Only persons who manufacture or process DGBA are subject to the requirements to test DGBA in this section.

(c) *Health effects testing*—(1) *Subchronic toxicity*—(i) *Required testing.* (A) A 90-day subchronic toxicity test of DGBE shall be conducted in rats by dermal application in accordance with § 798.2250 of this chapter except for the provisions in paragraphs (e)(9)(iv), (10)(i)(A) and (ii)(B), (11) (ii) and (iii), and (12)(i) of § 798.2250.

(B) For the purpose of this section, the following provisions also apply:

(*1*) A satellite group to evaluate fertility shall be established. Control males shall be cohabited with control females, and males and females administered the high dose shall be cohabited. Endpoints to be evaluated shall include percent mated; percent pregnant; length of gestation; litter size; viability at birth, on Day 4, and weaning, on Day 21; sex of the offspring; and litter weights at birth and Days 4, 7, 14, and 21. Litters shall be standardized on day 4 in accordance with the reproductive and fertility effects guideline, § 798.4700(c)(6)(iv) of this chapter. Gross examinations shall be made at least once each day and physical or behavioral anomalies in the dam or offspring shall be recorded. At weaning, dams shall be sacrificed and examined for resorption sites indicative of post-implantation loss. An additional 20 males and 40 females will have to be added to the subchronic study for this test. If the animals in the high dose group exhibit marked toxicity (e.g. greater than 20 percent weight loss), then the fertility tests

shall be conducted in the next highest dose group.

(*2*) Cage-side observations shall include, but not be limited to, changes in skin and fur; eyes and mucous membranes; respiratory, circulatory autonomic, and central nervous systems; somatomotor activity; and behavior pattern. In addition a daily examination for hematuria shall be done.

(*3*) Certain hematology determinations shall be carried out at least three times during the test period: Just prior to initiation of dosing (baseline data), after approximately 30 days on test, and just prior to terminal sacrifice at the end of the test period. Hematology determinations which are appropriate to all studies: Hematocrit, hemoglobin concentration, erythrocyte count, total and differential leucocyte count, mean corpuscular volume, and a platelet count.

(*4*) Urinalyses shall be done at least three times during the test period: Just prior to initiation of dosing (baseline data), after approximately 30 days into the test, and just prior to terminal sacrifice at the end of the test period. The animals shall be kept in metabolism cages, and the urine shall be examined microscopically for the presence of erythrocytes and renal tubular cells, in addition to measurement of urine volume, specific gravity, glucose, protein/albumin, and blood.

(*5*) The liver, kidney, adrenals, brain, gonads, prostate gland, epididymides, seminal vesicles, and pituitary gland shall be weighed wet, as soon as possible after dissection, to avoid drying.

(*6*) The following organs and tissues, or representative samples thereof, shall be preserved in a suitable medium for possible future histopathological examination: All gross lesions; lungs—which should be removed intact, weighed, and treated with a suitable fixative to ensure that lung structure is maintained (perfusion with the fixative is considered to be an effective procedure); nasopharyngeal tissues; brain—including sections of medulla/pons, cerebellar cortex, and cerebral cortex; pituitary; thyroid/parathyroid; thymus; trachea; heart; sternum with bone marrow; salivary glands; liver; spleen; kidneys; adrenals; pancreas; gonads; uterus; oviducts; vagina; vas deferens; accessory genital organs (epididymis, prostate, and, if present, seminal vesicles); aorta; (skin); gall bladder (if present); esophagus; stomach; duodenum; jejunum; ileum; cecum; colon; rectum; urinary bladder; representative lymph node; (mammary gland); (thigh musculature); peripheral nerve; (eyes); (femur—including articular surface); (spinal cord at three levels—cervical, midthoracic, and lumbar); and (zymbal and exorbital lachrymal glands).

(*7*) (*i*) Full histopathology on normal and treated skin and on organs and tissues listed in paragraph (c)(1)(i)(B)(*6*) of this section, as well as the accessory genital organs (epididymides, prostate, seminal vesicles) and the vagina, of all animals in the control and high dose groups.

(*ii*) The integrity of the various cell stages of spermatogenesis shall be determined, with particular attention directed toward achieving optimal quality in the fixation and embedding; preparations of testicular and associated reproductive organ samples for histology should follow the recommendations of Lamb and Chapin (1985) under paragraph (d)(1) of this section, or an equivalent procedure. Histological analyses shall include evaluations of the spermatogenic cycle, i.e., the presence and integrity of the 14 cell stages. These evaluations should follow the guidance provided by Clermont and Perey (1957) under paragraph (d)(2) of this section. Information shall also be provided regarding the nature and level of lesions observed in control animals for comparative purposes.

(*iii*) Data on female cyclicity shall be obtained by performing vaginal cytology over the last 2 weeks of dosing; the cell staging technique of Sadleir (1978) and the vaginal smear method in Hafez (1970) under paragraphs (d) (3) and (7) of this section or equivalent methods should be used. Data should be provided on whether the animal is cycling and the cycle length.

(*iv*) The ovary shall be serially sectioned with a sufficient number of sections examined to adequately detail oocyte and follicular morphology. The methods of Mattison and Thorgiersson (1979) and Pederson and Peters (1968) under paragraphs (d) (4) and (5) of this section may provide guidance. The

strategy for sectioning and evaluation is left to the discretion of the investigator, but shall be described in detail in the study plan and final report. The nature and background level of lesions in control tissue shall also be noted.

(ii) *Reporting requirements.* (A) The subchronic test shall be completed and the final report submitted to EPA within 15 months of the effective date of the final test rule.

(B) Progress reports shall be submitted to EPA every 6 months, beginning 6 months from the effective date of the final rule until submission of the final report to EPA.

(2) *Neurotoxicity/behavioral effects*—(i) *Required testing*—(A) (*1*) *Functional observational battery.* A functional observational battery shall be performed in the rat by dermal application of DGBE for a period of 90 days according to §798.6050 of this chapter except for the provisions in paragraphs (b)(1), (d)(4)(ii), (5), and (8)(ii)(E) of §798.6050.

(*2*) For the purpose of this section, the following provisions also apply:

(*i*) *Definition.* Neurotoxicity is any adverse acute and/or lasting effect on the structure or function of the central and/or peripheral nervous system related to exposure to a chemical substance.

(*ii*) *Lower doses.* The data from the lower doses shall show either graded dose-dependent effects in at least two of all the doses tested including the highest dose, or no neurotoxic (behavioral) effects at any dose tested.

(*iii*) *Duration and frequency of exposure.* Animals shall be exposed for 6 hours/day, 5 days/week for a 90-day period.

(*iv*) *Sensory function.* A simple assessment of sensory function (vision, audition, pain perception) shall be made. Marshall et al. (1971) in §798.6050(f)(8) of this chapter have described a neurologic exam for this purpose; these procedures are also discussed by Deuel (1977), under §798.6050(f)(4) of this chapter. Irwin (1968) under §798.6050(f)(7) of this chapter described a number of reflex tests intended to detect gross sensory deficits. Many procedures have been developed for assessing pain perception (e.g., Ankier (1974) under §798.6050(f)(1); D'Amour and Smith (1941) under §798.6050(f)(3); and Evans (1971) under §798.6050(f)(6) of this chapter.

(B)(*1*) *Motor activity.* A motor activity test shall be conducted in the rat by dermal application of DGBE for a period of 90 days according to §798.6200 of this chapter except for the provisions in paragraphs (c), (d)(3)(ii), (4)(ii), (5), (8)(i), and (iii) of §798.6200.

(*2*) For the purpose of this section, the following provisions also apply:

(*i*) *Principle of the test method.* The test substance is administered to several groups of experimental animals, one dose being used per group. Measurements of motor activity are made. Where possible, the exposure levels at which significant changes in motor activity are produced are compared to those levels which produce toxic effects not originating in the central and/or peripheral nervous system.

(*ii*) *Positive control data.* Positive control data are required to document the sensitivity of the activity measuring device and testing procedure. These data should demonstrate the ability to detect increases or decreases in activity and to generate a dose-effect curve or its equivalent using three values of the dose or equivalent independent variable. A single administration of the dose (or equivalent) is sufficient. It is recommended that chemical exposure be used to collect positive control data. Positive control data shall be collected at the time of the test study unless the laboratory can demonstrate the adequacy of historical data for this purpose.

(*iii*) *Lower doses.* The data from the lower doses shall show either graded dose-dependent effects in at least two of all the doses tested including the highest dose, or no neurotoxic (behavioral) effects at any dose tested.

(*iv*) *Duration and frequency of exposure.* Animals shall be exposed for 6 hours/day, 5 days/week for a 90-day period.

(*v*) *General.* Motor activity shall be monitored by an automated activity recording apparatus. The device used shall be capable of detecting both increases and decreases in activity, i.e. baseline activity as measured by the device shall not be so low as to preclude decreases nor so high as to preclude increases. Each device shall be

tested by a standard procedure to ensure, to the extent possible, reliability of operation across devices and across days for any one device. In addition, treatment groups shall be balanced across devices. Each animal shall be tested individually. The test session shall be long enough for motor activity to approach asymptotic levels by the last 20 percent of the session for most treatments and for the session control animals. All sessions should be of the same duration. Treatment groups shall be counter-balanced across test times. Effort should be made to ensure that variations in the test conditions are minimal and are not systematically related to treatment. Among the variables which can affect motor activity are sound level, size and shape of the test cage, temperature, relative humidity, lighting conditions, odors, use of home cage or novel test cage, and environmental distractions. Tests shall be executed by an appropriately trained individual.

(*vi*) *Subchronic.* All animals shall be tested prior to initiation of exposure and at 30±4, 60±4, and 90±4 days during the exposure period. Testing shall occur prior to the daily exposure. Animals shall be weighed on each test day and at least once weekly during the exposure period.

(C)(*1*) *Neuropathology.* A neuropathology test shall be conducted in the rat by dermal application of DGBE for a period of 90 days according to § 798.6400 of this chapter except for the provisions in paragraphs (d)(4)(ii), (5), (8)(iv)(C), and (E)(*2*) of § 798.6400.

(*2*) For the purpose of this section, the following provisions also apply:

(*i*) *Lower doses.* The data from the lower doses shall show either graded dose-dependent effects in at least two of all the doses tested including the highest dose, or no neurotoxic (behavioral) effects at any dose tested.

(*ii*) *Duration and frequency of exposure.* Animals shall be exposed for 6 hours/day, 5 days/week for a 90-day period.

(*iii*) *Clearing and embedding.* After dehydration, tissue specimens shall be cleared with xylene and embedded in paraffin or paraplast except for the sural nerve which should be embedded in plastic. Multiple tissue specimens (e.g. brain, cord, ganglia) may be embedded together in one single block for sectioning. All tissue blocks shall be labeled to provide unequivocal identification. A method for plastic embedding is described by Spencer et al. in paragraph (d)(6) of this section.

(*iv*) *Special stains.* Based on the results of the general staining, selected sites and cellular components shall be further evaluated by the use of specific techniques. If hematoxylin and eosin screening does not provide such information, a battery of stains shall be used to assess the following components in all appropriate required samples: Neuronal body (e.g., Einarson's gallocyanin), axon (e.g., Bodian), myelin sheath (e.g., Kluver's Luxol Fast Blue), and neurofibrils (e.g., Bielchosky). In addition, peripheral nerve fiber teasing may be used. Detailed staining methodology is available in standard histotechnological manuals such as Armed Forces Institute of Pathology (AFIP) (1968) under § 798.6400(f)(1), Ralis et al. (1973) under § 798.6400(f)(5), and Chang (1979) under § 798.6400(f)(2) of this chapter. The nerve fiber teasing technique is discussed in Spencer and Schaumberg (1980) under § 798.6400(f)(6) of this chapter. A section of normal tissue shall be included in each staining to assure that adequate staining has occurred. Any changes shall be noted and representative photographs shall be taken. If a lesion(s) is observed, the special techniques shall be repeated in the next lower treatment group until no further lesion is detectable.

(ii) *Reporting requirements.* (A) The neurotoxicity/behavioral tests required under paragraph (c)(2) of this section shall be completed and the final reports submitted to EPA within 17 months of the effective date of the final rule.

(B) Interim progress reports shall be submitted to EPA at 6-month intervals, beginning 6 months from the effective date of the final rule until submission of the applicable final report to EPA.

(3) *Developmental neurotoxicity*—(i) *Required testing.* A developmental neurotoxicity test of DGBE shall be conducted after a public program review of the Tier I data from the functional observational battery, motor activity,

and neuropathology tests in paragraph (c)(2) of this section, and the reproductive tests in paragraph (c)(1) of this section, and if EPA issues a FEDERAL REGISTER notice or sends a certified letter to the test sponsor specifying that the testing shall be initiated. The test shall be performed in rats in accordance with § 795.250 of this chapter.

(ii) *Reporting requirements.* (A) The developmental neurotoxicity test shall be completed and the final report submitted to EPA within 15 months of EPA's notification of the test sponsor by certified letter or FEDERAL REGISTER notice under paragraph (c)(3)(i) of this section that the testing shall be initiated.

(B) Progress reports shall be submitted to EPA every 6 months, beginning 6 months after the date of notification that the testing shall be initiated, until submission of the final report to EPA.

(4) *Pharmacokinetics*—(i) *Required testing.* (A) Pharmacokinetics testing of DGBE and DGBA will be conducted in rats by the dermal route of administration in accordance with § 795.225 of this chapter, except for the provisions in paragraphs (b) (1)(ii) and (3)(i) of § 795.225.

(B) For the purpose of this section, the following provisions also apply:

(*1*) *Animals.* Adult male and female Sprague Dawley rats shall be used. The rats shall be 7 to 8 weeks old and weigh 180 to 220 grams. Prior to testing, the animals shall be selected at random for each group. Animals showing signs of ill health shall not be used.

(*2*) *Observation of animals—Urinary and fecal excretion.* The quantities of ^{14}C excreted in urine and feces by rats dosed as specified in paragraph (b)(2)(iv) of § 795.225 shall be determined at 8, 24, 48, 72, and 96 hours after dosing, and if necessary, daily thereafter until at least 90 percent of the dose has been excreted or until 7 days after dosing (whichever occurs first). Four animals per sex per dose group shall be used for this purpose.

(ii) *Reporting requirements.* (A) The pharmacokinetics tests shall be completed and the final reports submitted to EPA within 8 months of the effective date of the final amendment.

(B) A progress report shall be submitted to EPA 6 months from the effective date of the final amendment.

(d) *References.* For additional background information the following references should be consulted:

(1) Lamb, J.C. and Chapin, R.E. ''Experimental models of male reproductive toxicology.'' In: ''Endocrine Toxicology.'' Thomas, J.A., Korach, K.S., and McLachlan, J.A., eds. New York, NY: Raven Press. pp. 85–115. (1985).

(2) Clermont, Y. and Perey, B. ''Quantitative study of the cell population of the seminiferous tubules in immature rats.'' *American Journal of Anatomy*. 100:241–267. (1957).

(3) Sadleir, R.M.F.S. ''Cycles and seasons.'' In: ''Reproduction in Mammals: I. Germ Cells and Fertilization.'' Austin, C.R. and Short, R.V., eds. New York, NY: Cambridge Press. Chapter 4. (1978).

(4) Mattison, D.R. and Thorgiersson, S.S. ''Ovarian aryl hydrocarbon hydroxylase activity and primordial oocyte toxicity of polycyclic aromatic hydrocarbons in mice.'' *Cancer Research*. 39:3471–3475. (1979).

(5) Pederson, T. and Peters, H. ''Proposal for classification of oocytes and follicles in the mouse ovary. *Journal of Reproduction and Fertility*. 17:555–557. (1968).

(6) Spencer, P.S., Bischoff, M.C., and Schaumburg, H.H. ''Neuropathological methods for the detection of neurotoxic disease.'' In: ''Experimental and Clinical Neurotoxicology.'' Spencer, P.S. and Schaumburg, H.H., eds. Baltimore, MD: Williams & Wilkins, pp. 743–757. (1980).

(7) Hafez, E.S., ed., ''Reproduction and Breeding Techniques for Laboratory Animals.'' Chapter 10. Philadelphia: Lea & Febiger (1970).

(e) *Effective date.* (1) The effective date of the final rule is April 11, 1988, except for paragraph (c)(2)(ii)(A) of this section. The effective date for paragraph (c)(2)(ii)(A) of this section is March 1, 1990. The effective date for paragraphs (c)(4)(ii)(A) and (c)(4)(ii)(B) of this section is November 27, 1989.

(2) The guidelines and other test methods cited in this rule are referenced as they exist on the effective date of the final rule.

[53 FR 5950, Feb. 26, 1988, as amended at 54 FR 27357, June 29, 1989; 54 FR 41835, Oct. 12, 1989; 55 FR 7326, Mar. 1, 1990; 58 FR 34205, June 23, 1993]

§ 799.1575 Diethylenetriamine (DETA).

(a) *Identification of chemical test substance.* (1) Diethylenetriamine (CAS No.

111–40–0, also known as DETA) shall be tested in accordance with this part.

(2) Diethylenetriamine of at least 99 percent purity shall be used as the test substances in all tests.

(b) *Persons required to submit study plans, conduct tests and submit data.* All persons who manufacture or process diethylenetriamine from July 8, 1985, to the end of the reimbursement period shall submit letters of intent to test, exemption applications, and study plans and shall conduct tests and submit data as specified in this section, subpart A of this part and part 790 of this chapter (Test Rule Development and Exemption Procedures).

(c) *Health effects testing*—(1) *Mutagenic effects—Gene mutation*—(i) *Required testing.* (A) A sex-linked recessive lethal test in *Drosophila melanogaster* shall be conducted with DETA.

(B) A mouse specific locus assay shall be conducted with DETA, if the sex-linked recessive lethal test in *Drosophila melanogaster* conducted pursuant to paragraph (c)(1)(i)(A) of this section produces a positive result.

(ii) *Test standards.* (A) The testing for the sex-linked recessive lethal assay shall be conducted in accordance with the following revised EPA-approved modified study plan (June 19, 1986) originally submitted by the Diethylenetriamine Producers/Importers Alliance (DPIA): ''Sex-linked recessive lethal test in *Drosophila melanogaster*,'' with modifications as approved by EPA on March 9, 1987, and May 21, 1987.

(B) The testing for the mouse visible specific locus assay shall be conducted in accordance with the following revised EPA-approved modified study plan (June 19, 1986) originally submitted by the Diethylenetriamine Producers/Importers Alliance (DPIA): ''Mouse specific locus test for visible markers.''

(C) These revised EPA-approved modified study plans are available for inspection in the Non-Confidential Information Center (NCIC) (7407), Office of Pollution Prevention and Toxics, U.S. Environmental Protection Agency, Room B–607 NEM, 401 M St., SW., Washington, DC 20460, between the hours of 12 p.m. and 4 p.m. weekdays excluding legal holidays.

(iii) *Reporting requirements.* (A) The sex-linked recessive lethal test of DETA in *Drosophila melanogaster* shall be completed and a final report submitted to the Agency within 14 months from the effective date of the final Phase II rule. Two interim progress reports shall be submitted at 6-month intervals, the first of which is due within 6 months of the effective date of the final Phase II rule.

(B) If required pursuant to paragraph (c)(1)(i)(B) of this section, the mouse specific locus test of DETA for visible markers shall be completed and a final report submitted to the Agency within 48 months from the designated date contained in EPA's notification of the test sponsor by certified letter or FEDERAL REGISTER notice that testing should be initiated. Seven interim progress reports shall be submitted at 6-month intervals, the first of which is due within 6 months of EPA's designated date.

(2) *Mutagenic effects—Chromosomal aberrations*—(i) *Required testing.* (A) An *in vitro* cytogenetics test shall be conducted with DETA.

(B) An *in vivo* cytogenetics test shall be conducted with DETA, if the *in vitro* cytogenetics test conducted pursuant to paragraph (c)(2)(i)(A) of this section produces a negative result.

(C) A dominant lethal assay shall be conducted with DETA, if either the *in vitro* cytogenetics test conducted pursuant to paragraph (c)(2)(i)(A) of this section or the *in vivo* cytogenetics test conducted pursuant to paragraph (c)(2)(i)(B) of this section produces a positive result.

(D) A heritable translocation assay shall be conducted with DETA, if the dominant lethal assay conducted pursuant to paragraph (c)(2)(i)(C) of this section produces a positive result.

(ii) *Test standards.* (A) The testing for cytogenetic effects shall be conducted in accordance with the following revised EPA-approved modified study plan (June 19, 1986) originally submitted by the Diethylenetriamine Producers/Importers Alliance (DPIA): ''*In vitro* cytogenetics test'' and ''*In vivo* cytogenetics test,'' with modifications as approved by EPA on March 9, 1987, and May 21, 1987.

(B) Other testing for cytogenetic effects shall be conducted in accordance with the following revised EPA-approved modified study plans (June 19, 1986) originally submitted by the Diethylenetriamine Producers/Importers Alliance (DPIA): ''Dominant lethal assay of diethylenetriamine in CD rats,'' and ''Heritable translocation of diethylenetriamine in CD–1 mice.''

(C) These revised EPA-approved modified study plans are available for inspection in the Non-Confidential Information Center (NCIC) (7407), Office of Pollution Prevention and Toxics, U.S. Environmental Protection Agency, Room B– 607 NEM, 401 M St., SW., Washington, DC 20460, between the hours of 12 p.m. and 4 p.m. weekdays excluding legal holidays.

(iii) *Reporting requirements.* (A) The *in vitro* cytogenetics testing of DETA shall be completed and a final report submitted to the Agency within 6 months of the effective date of the final Phase II rule.

(B) If required pursuant to paragraph (c)(2)(i)(B) of this section, the *in vivo* cytogenetics testing of DETA shall be completed and final report submitted to the Agency within 14 months of the effective date of the final Phase II rule. One interim progress report shall be submitted within 12 months of the final rule's effective date.

(C) If required pursuant to paragraph (c)(2)(i)(C) of this section, the dominant lethal testing of DETA shall be completed and a final report submitted to the Agency within 20 months of the effective date of the final Phase II rule.

(D) If required pursuant to paragraph (c)(2)(i)(D) of this section, the heritable translocation testing of DETA shall be completed and a final report submitted to the Agency within 18 months of the designated date contained in EPA's notification of the test sponsor by certified letter or FEDERAL REGISTER notice that testing should be initiated. Two interim progress reports shall be submitted at 6-month intervals, the first of which is due within 6 months of EPA's designated date.

(3) *Subchronic effects*—(i) *Required testing.* A ninety-day oral subchronic toxicity test shall be conducted with DETA in at least one mammalian species.

(ii) *Test standard.* The testing shall be conducted in accordance with the following revised EPA-approved modified study plans (June 19, 1986) originally submitted by the Diethylenetriamine Producers/Importers Alliance (DPIA): ''Ninety-Day (subchronic) dietary toxicity study with diethylenetriamine in albino rats,'' with modifications approved by EPA on March 9, 1987, and May 21, 1987. This revised EPA-approved modified study plans is available for inspection in the Non-Confidential Information Center (NCIC) (7407), Office of Pollution Prevention and Toxics, U.S. Environmental Protection Agency, Room B–607 NEM, 401 M St., SW., Washington, DC 20460, between the hours of 12 p.m. and 4 p.m. weekdays excluding legal holidays.

(iii) *Reporting requirements.* The testing shall be completed and a final report submitted to the Agency within 15 months of the effective date of the final Phase II rule. Two interim progress reports shall be submitted at 6-month intervals, the first of which is due within 6 months of the effective date of the final Phase II rule.

(d) *Chemical fate testing*—(1) *Required testing.* Testing to assess *N*-nitrosamine formation, resulting from aerobic biological and/or chemical transformation, shall be conducted with DETA using environmental samples of lake water, sewage, and soil.

(2) *Test standard.* The testing shall be conducted in accordance with the following revised EPA-approved modified study plan (June 7, 1990) originally submitted by the Diethylenetriamine Producers/Importers Alliance (DPIA): ''Modified Final Copy (04–17–90); Diethylenetriamine: Environmental Fate in Sewage, Lake Water and Soil''. This revised EPA-approved modified study plans are available for inspection in the Non-Confidential Information Center (NCIC) (7407), Office of Pollution Prevention and Toxics, U.S. Environmental Protection Agency, Room B–607 NEM, 401 M St., SW., Washington, DC 20460, between the hours of 12 p.m. and 4 p.m. weekdays excluding legal holidays.

(3) *Reporting requirements.* The testing shall be completed and a final report submitted to EPA within 20 months of the effective date of the final Phase II

rule. Interim progress reports shall be submitted at 6–month intervals, the first of which is due within 6 months of the effective date of the final Phase II rule.

(e) *Modifications.* Persons subject to this section are not subject to the requirements of § 790.50(a)(2)(ii) of this chapter.

(f) *Effective date.* (1) The effective date of the final Phase II rule for diethylenetriamine is March 19, 1987, except for paragraphs (c)(4)(iii), (d)(2), and (d)(3) of this section. The effective date of paragraphs (c)(4)(iii), and (d)(3) of this section is March 1, 1990. The effective date for paragraph (d)(2) of this section is May 21, 1991.

(2) The guidelines and other test methods cited in this rule are referenced as they exist on the effective date of the final rule.

[50 FR 21412, May 23, 1985; 50 FR 33543, Aug. 20, 1985; 51 FR 3468, Jan. 28, 1986; 51 FR 4736, Feb. 7, 1986; 52 FR 3238, Feb. 3, 1987; 54 FR 27356, June 29, 1989; 55 FR 3408, Feb. 1, 1990; 55 FR 7326, Mar. 1, 1990; 56 FR 23230, May 21, 1991; 58 FR 34205, June 23, 1993; 60 FR 34467, July 3, 1995]

§ 799.1645 2-Ethylhexanol.

(a) *Identification of test substance.* (1) 2-Ethylhexanol (CAS No. 104–76–7) shall be tested in accordance with this section.

(2) 2-Ethylhexanol of at least 99.0-percent purity shall be used as the test substance.

(b) *Persons required to submit study plans, conduct tests, and submit data.* All persons who manufacture or process, or intend to manufacture or process 2-ethylhexanol, other than as an impurity, from the effective date of this final rule to the end of the reimbursement period shall submit letters of intent to conduct testing, submit study plans, conduct tests, and submit data or exemption applications as specified in this section, subpart A of this part, and parts 790 and 792 of this chapter for single-phase rulemaking.

(c) *Health effects*—(1) *Oncogenic effects*—(i) *Required testing.* (A) Oncogenicity tests shall be conducted in Fisher 344 rats and B6C3Fl mice by the oral route with 2-ethylhexanol in accordance with § 798.3300 of this chapter, except for the provisions in § 798.3300(b)(6).

(B) For the purpose of this section, the following provisions also apply to the oncogenicity tests: (*1*) *Administration of the test substance.* 2-Ethylhexanol shall be administered either by microencapsulation before adding it to the diet or by gavage.

(*2*) [Reserved]

(ii) *Reporting requirements.* (A) The study plan for the oncogenicity test shall be submitted at least 45 days before the initiation of testing.

(B) The oncogenicity testing shall be completed and final report submitted to the Agency within 53 months of the effective date of this final rule if 2-ethylhexanol is administered by gavage or within 56 months of the effective date of this final rule if administered by microencapsulation.

(C) Interim progress reports shall be submitted to EPA at 6-month intervals beginning 6 months after the effective date of the final rule, until the final report is submitted to EPA.

(2) [Reserved]

(d) *Effective date.* The effective date of this final rule requiring oncogenicity testing of 2-ethylhexanol is September 16, 1987.

[52 FR 28704, Aug. 3, 1987, as amended at 58 FR 34205, June 23, 1993]

§ 799.1700 Fluoroalkenes.

(a) *Identification of test substances.* (1) Vinyl fluoride (VF; CAS No. 75–02–5), vinylidene fluoride (VDF; CAS No. 75–38–7), tetrafluoroethene (TFE; CAS No. 116–14–3), and hexafluoropropene (HFP; CAS No. 116–15–4) shall be tested in accordance with this section.

(2) VF, VDF, TFE, and HFP of at least 99 percent purity shall be used as the test substances.

(b) *Persons required to submit study plans, conduct tests and submit data.* All persons who manufacture VF, VDF, TFE, or HFP, other than as an impurity, from July 22, 1987 to the end of the reimbursement period shall submit letters of intent to conduct testing or exemption applications, submit study plans, conduct tests in accordance with the TSCA Good Laboratory Practice Standards (40 CFR part 792), and submit data as specified in this section, subpart A of this part, and part 790 of

this chapter for single-phase rulemaking, for the substances they manufacture.

(c) *Health effects testing*—(1) *Mutagenic effects—Gene mutation*—(i) *Required testing.* (A) (*1*) A detection of gene mutations in somatic cells in culture assay shall be conducted with TFE and HFP in accordance with §798.5300 of this chapter except for the provisions in paragraphs (c), (d)(3)(i), (4), (5) and (6) and (e).

(*2*) For the purposes of this section, the following provisions also apply:

(i) Reference substances. No reference substance is required.

(ii) Test method—Type of cells used in the assay. Mutation induction at the HPRT locus shall be measured in Chinese hamster ovary (CHO) cells. Cells shall be checked for Mycoplasma contamination and may also be checked for karyotype stability.

(iii) Test method—Metabolic activation. Cells shall be exposed to the test substance only in the presence of a metabolic activation system for TFE, and in both the presence and absence of a metabolic activation system for HFP. The metabolic activation system shall be derived from the post-mitochondrial fraction (S–9) of livers from rats pretreated with Aroclor 1254.

(iv) Test method—Control groups. Positive and negative controls shall be included in each experiment. In assays with metabolic activation, the positive control substance shall be known to require such activation. Nitrogen shall serve as the negative control and diluting gas.

(v) Test method—Test chemicals. The test should be designed to have a predetermined sensitivity and power. The number of cells, cultures, and concentrations of test substance used should reflect these defined parameters. The number of cells per culture is based on the expected background mutant frequency; a general guide is to use a number which is 10 times the inverse of this frequency. Several concentrations (usually at least four) of the test substance shall be used. These shall yield a concentration-related toxic effect. The highest concentration shall produce a low level of survival (approximately 10 percent), and the survival in the lowest concentration shall approximate that of the negative control. Cytotoxicity shall be determined after treatment with the test substance both in the presence and in the absence of the metabolic activation system.

(vi) Test performance. Cells in treatment medium with and without metabolic activation shall be exposed to varying concentrations of test gas-air mixtures by flushing treatment flasks (or chambers) with 10 volumes of test gas-air mixture at a rate of 500 mL/min or that rate which will allow complete flushing within 1 minute. In the case of a test chamber volume of 1.67 L, a flow rate of 10 L/min is appropriate. Each flask shall be closed with a cap with a rubber septum. Headspace samples shall be taken at the beginning and end of the exposure period and analyzed to determine the amount of test gas in each flask. Flasks shall be incubated on a rocker panel at 37 ° C for 5 hours for tests with metabolic activation. For the non-activated portion of the test, the incubation time shall be 18 to 19 hours at 37 ° C. At the end of the exposure period, cells treated with metabolic activation shall be washed and incubated in culture medium for 21 to 26 hours prior to subculturing the viability and expression of mutant phenotype. Cells treated without metabolic activation shall be washed and subcultured immediately to determine viability and to allow for expression of mutant phenotype. Appropriate subculture schedules (generally twice during the expression period) shall be used. At the end of the expression period, which shall be sufficient to allow near optimal phenotypic expression of induced mutants (generally 7 days for this cell system), cells shall be grown in medium with and without selective agent for determination of numbers of mutants and cloning efficiency, respectively. This last growth period is generally 7 days at 37 ° C. Results of this test shall be confirmed in an independent experiment.

(B)(*1*) A sex-linked recessive lethal test in *Drosophila melanogaster* shall be conducted with VDF and VF in accordance with §798.5275 of this chapter except for the provisions in paragraph (d)(5). This test shall also be performed with TFE or HFP if the somatic cells

in culture assay conducted pursuant to paragraph (c)(1)(i)(A) of this section produces a positive result.

(*2*) For the purposes of this section the following provisions also apply:

(i) Test chemicals. It is sufficient to test a single dose of the test substance. This dose shall be the maximum tolerated dose or that which produces some indication of toxicity. Exposure shall be by inhalation.

(*ii*) [Reserved]

(C)(*1*) A mouse visible specific locus assay (MVSL) shall be conducted with VF, VDF, TFE, and HFP in accordance with § 798.5200 of this chapter, except for the provisions of paragraph (d)(5) of § 798.5200, or a mouse biochemical-specific locus assay (MBSL) shall be conducted with VF, VDF, TFE, and HFP in accordance with § 798.5195 of this chapter, except for the provisions of paragraph (d)(5) of § 798.5195, for whichever of these substances produces a positive test result in the sex-linked recessive lethal test in *Drosophila melanogaster* conducted pursuant to paragraph (c)(1)(i)(B) of this section if, after a public program review, EPA issues a FEDERAL REGISTER notice or sends a certified letter to the test sponsor specifying that the testing shall be initiated.

(*2*) For the purposes of this section, the following provisions also apply:

(i) Test chemicals. A minimum of two dose levels shall be tested. The highest dose tested shall be the highest dose tolerated without toxic effects, provided that any temporary sterility induced due to elimination of spermatagonia is of only moderate duration, as determined by a return of males to fertility within 80 days after treatment, or shall be the highest dose attainable. Animals shall be exposed to the test substance by inhalation. Exposure shall be for 6 hours a day. Duration of exposure shall be dependent upon accumulated total dose desired for each group.

(*ii*) [Reserved]

(ii) *Reporting requirements.* (A) Mutagenic effects-gene mutation tests shall be completed and the final reports shall be submitted to EPA as follows: Somatic cells in culture assay, within 6 months after the effective date of the final rule; *Drosophila* sex-linked recessive lethal, within 9 months (for VF and VDF) and within 15 months (for TFE and HFP) after the effective date of the final rule; MVSL or MBSL, within 51 months after the date of EPA's notification of the test sponsor by certified letter or FEDERAL REGISTER notice that testing shall be initiated.

(B) Progress reports shall be submitted to the Agency every 6 months beginning 6 months after the effective date of the final rule or receipt of notice that testing shall be initiated.

(2) *Mutagenic effects—Chromosomal aberrations*—(i) *Required testing.* (A)(*1*) A mouse micronucleus cytogenetics test shall be conducted with VDF and TFE in accordance with § 798.5395 of this chapter except for the provisions in paragraphs (d)(5) (i), (ii), and (iii).

(*2*) For the purposes of this section, the following provisions also apply:

(i) Test method—Vehicle. No vehicle is required.

(ii) Test method—Dose levels. Three dose levels shall be used. The highest dose tested shall be the maximum tolerated dose, that dose producing some indication of cytotoxicity (e.g., a change in the ratio of polychromatic to normochromatic erythrocytes, or the highest dose attainable).

(*iii*) *Test method—route of administration.* Animals shall be exposed by inhalation with a single 6-hour exposure, with three sampling times between 20 and 72 hours.

(B)(*1*) For each respective test substance, a dominant lethal assay shall be conducted with VF and HFP in accordance with § 798.5450 of this chapter except for the provisions in paragraphs (d)(2)(i), (4) (i), (5) and (e). This test shall also be performed with TFE or VDF if the mouse micronucleus cytogenetics test conducted pursuant to paragraph (c)(2)(i)(A) of this section produces a positive result.

(*2*) For the purposes of this section, the following provisions also apply:

(*i*) *Test method—Description.* For this assay, the test substance shall be administered by inhalation for 5 consecutive days for 6 hours per day.

(*ii*) *Test method—Concurrent controls.* Concurrent positive and negative (vehicle) controls shall be included in each experiment.

(*iii*) *Test method—Test chemicals.* Exposure shall be by inhalation for 5 consecutive days for 6 hours per day. Three dose levels shall be used. The highest dose shall produce signs of toxicity (e.g., slightly reduced fertility) or shall be the highest attainable.

(*iv*) *Test performance.* Individual males shall be mated sequentially to 1 or 2 virgin females. Females shall be left with the males for at least the duration of one estrus cycle or alternatively until mating has occurred as determined by the presence of sperm in the vagina or by the presence of a vaginal plug. In any event, females shall be left with the males for no longer than 7 days. The number of matings following treatment shall ensure that germ cell maturation is adequately covered. Mating shall continue for at least 6 weeks. Females shall be sacrificed in the second half of pregnancy, and uterine contents shall be examined to determine the number of implants and live and dead embryos. The examination of ovaries to determine the number of corpora lutea is left to the discretion of the investigator.

(C)(*1*) A heritable translocation assay shall be conducted with VF, VDF, TFE, or HFP in accordance with §798.5460 of this chapter except for the provisions of paragraphs (d)(3)(i), (5), and (e)(1), if the dominant lethal assay conducted for that substance pursuant to paragraph (c)(2)(i)(B) of this section produces a positive result and if, after a public program review, EPA issues a FEDERAL REGISTER notice or sends a certified letter to the test sponsor specifying that the testing shall be initiated.

(*2*) For the purposes of this section, the following provisions also apply:

(*i*) *Test method—Animal selection.* The mouse shall be used as the test species.

(*ii*) *Test method.* No vehicle is required. At least two dose levels shall be used. The highest dose level shall result in toxic effects (which shall not produce an incidence of fatalities which would preclude a meaningful evaluation) or shall be the highest dose attainable. Animals shall be exposed by inhalation.

(*iii*) *Test performance—Treatment and mating.* The animals shall be dosed with the test substance 6 hours per day, 7 days per week over a period of 35 days. After treatment, each male shall be caged with 2 untreated females for a period of 1 week. At the end of 1 week, females shall be separated from males and caged individually. When females give birth, the date of birth, litter size and sex of progeny shall be recorded. All male progeny shall be weaned and all female progeny shall be discarded.

(ii) *Reporting requirements.* (A) Mutagenic effects-chromosomal aberration testing shall be completed and final results submitted to EPA after the effective date of the rule as follows: mouse micronucleus cytogenetics for VDF by November 22, 1988, and for TFE within 10 months after the effective date of the final rule; dominant lethal assay for VF and HFP by October 22, 1988, and for VDF and TFE within 19 months after the effective date of the rule; heritable translocation assay, within 25 months after the date of EPA's notification of the test sponsor by certified letter or FEDERAL REGISTER notice that testing shall be initiated.

(B) Progress reports shall be submitted to the Agency every 6 months beginning 6 months after the effective date of the final rule or receipt of notice that testing shall be initiated.

(3) *Subchronic toxicity*—(i) *Required Testing.* (A) An inhalation subchronic toxicity test shall be conducted with HFP in accordance with the TSCA Test Guideline specified in §798.2450 of this chapter except for the provisions in paragraphs (d)(5), (10)(v), and (e)(3)(iv)(D).

(B) For the purpose of this section the following provisions also apply:

(*1*) *Test procedures—Exposure conditions.* The animals shall be exposed to the test substance 6 hours per day, 5 days per week for 90 days.

(*2*) *Test procedures—Observation of animals.* Animals shall be weighted weekly, and food and water consumption shall also be measured weekly.

(*3*) *Test report—Individual animal data.* Food and water consumption data shall be reported.

(ii) *Reporting requirements.* (A) The required subchronic toxicity test shall be completed and final results submitted to the Agency within 18 months after the effective date of the final rule.

(B) Progress reports shall be submitted to the Agency every 6 months beginning 6 months after the effective date of the final rule.

(4) *Oncogenicity*—(i) *Required testing.* (A) (*1*) Oncogenicity tests shall be conducted in both rats and mice by inhalation with VF in accordance with § 798.3300 of this chapter, except for the provisions in paragraph (b)(7)(vi) of § 798.3300.

(*2*) For the purposes of this section, the following provisions also apply:

(*i*) *Test procedures—observations of animals.* All mice of test groups in which survival is approximately 25 percent of mice at risk (approximately 25 percent of 70, or approximately 18 mice) will be sacrificed near the time that 25 percent survival is achieved. All mice surviving the 18–month test period will be sacrificed and necropsied. The order of sacrifice for mice at all pathological evaluations will be random among all exposure groups within a sex. Moribund animals should be removed and sacrificed when noticed.

(*ii*) All rats of test groups in which survival is approximately 25 percent of rats at risk (approximately 25 percent of 60, or approximately 15 rats) will be sacrificed near the time that 25 percent survival is achieved. All rats surviving the 24–month test period will be sacrificed and necropsied. The order of sacrifice for rats at all pathological evaluations will be random among all exposure groups within a sex. Moribund animals should be removed and sacrificed when noticed.

(B) Oncogenicity testing shall be conducted in mice with VDF in accordance with § 798.3300 of this chapter.

(C) [Reserved]

(D) Oncogenicity tests shall also be conducted by inhalation in both rats and mice with TFE in accordance with § 798.3300 of this chapter if TFE yields a positive test result in any one of the following mutagenicity tests: The *in vitro* cytogenetics assay conducted pursuant to paragraph (c)(2)(i)(A) of this section, the mouse micronucleus cytogenetics assay conducted pursuant to paragraph (c)(2)(i)(B) of this section, the mammalian cells in culture assay conducted pursuant to paragraph (c)(1)(i)(A) of this section or the sex-linked recessive lethal assay in *Drosophila melanogaster* conducted pursuant to paragraph (c)(1)(i)(B) of this section if, after a public program review, EPA issues a FEDERAL REGISTER notice or sends a certified letter to the test sponsor specifying that the testing shall be initiated. Criteria for positive test results are established in 40 CFR 798.5375, 798.5385, 798.5300 and 798.5275 of this chapter, respectively.

(ii) *Reporting requirements.* (A) The oncogenicity testing for VDF shall be completed and the final results submitted to the Agency by March 23, 1992. The oncogenicity testing for VF shall be completed and the final results submitted to the Agency by July 22, 1992. For TFE and HFP, the oncogenicity testing shall be completed and the final results submitted to the Agency within 56 months after the date of EPA's notification of the test sponsor by certified letter or FEDERAL REGISTER notice that testing shall be initiated.

(B) Progress reports shall be submitted every 6 months beginning 6 months after the effective date of the final rule for VF and VDF and beginning 6 months after notification by certified letter or FEDERAL REGISTER notice that testing is to begin for TFE and HFP.

(d) *Effective date.* (1) The effective date of the final rule is July 22, 1987, except for paragraphs (c)(1)(i)(C)(1), (c)(1)(ii)(A), (c)(4)(i) and(c)(4)(ii)(A) of this section. The effective date of paragraphs (c)(1)(i)(C)(*1*) and (c)(1)(ii)(A) of this section is May 21, 1990. The effective date of paragraphs (c)(4)(i)(A)(*1*) (c)(4)(i)(A)(*2*)(*i*), (c)(4)(i)(B) and (c)(4)(i)(D) of this section is May 21, 1991. The effective date for paragraphs (c)(4)(i)(A)(*2*)(*ii*) and (c)(4)(i)(C) of this section is June 12, 1992. The effective date of paragraph (c)(4)(ii)(A) of this section is May 28, 1993.

(2) The guidelines and other test methods cited in this rule are referenced as they exist on the effective date of the final rule.

[52 FR 21530, June 8, 1987, as amended at 52 FR 43762, Nov. 16, 1987; 54 FR 27357, June 29, 1989; 54 FR 33148, Aug. 11, 1989; 55 FR 12643, Apr. 5, 1990; 56 FR 23230, May 21, 1991; 57 FR 24960, June 12, 1992; 58 FR 30992, May 28, 1993; 58 FR 34205, June 23, 1993]

§ 799.2155 Commercial hexane.

(a) *Identification of test substance.* (1) ''Commercial hexane,'' for purposes of this section, is a product obtained from crude oil, natural gas liquids, or petroleum refinery processing in accordance with the American Society for Testing and Materials Designation D 1836–83 (ASTM D 1836), consists primarily of six-carbon alkanes or cycloalkanes, and contains at least 40 liquid volume percent *n*-hexane (CAS No. 110–54–3) and at least 5 liquid volume percent methylcyclopentane (MCP; CAS No. 96–37–7). ASTM D 1836, formally entitled ''Standard Specification for Commercial Hexanes,'' is published in *1986 Annual Book of ASTM Standards: Petroleum Products and Lubricants,* ASTM D 1836–83, pp. 966–967, 1986, is incorporated by reference, and is available for public inspection at the Office of the Federal Register, 800 North Capitol Street NW., suite 700, Washington, DC. This incorporation by reference was approved by the Director of the Office of the Federal Register in accordance with 5 U.S.C. 522(a) and 1 CFR part 51. This material is incorporated as it exists on the date of approval, and a notice of any change in this material will be published in the FEDERAL REGISTER. Copies of the incorporated material may be obtained from the Non-Confidential Information Center (NCIC) (7407), Office of Pollution Prevention and Toxics, U.S. Environmental Protection Agency, Room B–607 NEM, 401 M St., SW., Washington, DC 20460, between the hours of 12 p.m. and 4 p.m. weekdays excluding legal holidays.

(2) The commercial hexane test substance, for purposes of this section, is a product which conforms to the specifications of ASTM D1836 and contains at least 40 liquid volume percent but no more than 55 liquid volume percent *n*-hexane and no less than 10 liquid volume percent MCP.

(b) *Persons required to submit study plans, conduct tests, and submit data.* All persons who manufacture (including import) or process or intend to manufacture or process commercial hexane, as defined in paragraph (a)(1) of this section and other than as an impurity, from the effective date of the final rule to the end of the reimbursement period shall submit letters of intent to conduct testing, submit study plans, conduct tests in accordance with part 792 of this chapter, and submit data, or submit exemption applications, as specified in this section, subpart A of this part, and part 790 of this chapter for single-phase rulemaking. Persons who manufacture commercial hexane as a byproduct are covered by the requirements of this section. Notwithstanding § 790.50(a)(1) of this chapter, persons who notify EPA of their intent to conduct neurotoxicity testing in compliance with paragraph (c)(7) of this section may submit study plans for those tests less than 45 days before beginning testing provided that EPA receives the study plans before this testing begins.

(c) *Health effects testing*—(1) *Subchronic inhalation toxicity*—(i) *Required testing.* (A) A subchronic inhalation toxicity test shall be conducted with commercial hexane in accordance with § 798.2450 of this chapter except for the provisions in paragraphs (d)(4)(ii) and (5) of § 798.2450.

(B) For the purposes of this section, the following provisions also apply:

(*1*) *High dose level.* The highest concentration should result in toxic effects but neither produce an incidence of fatalities which would prevent a meaningful evaluation nor exceed the lower explosive limit of commercial hexane.

(*2*) *Exposure conditions.* Animals shall be dosed for 6 hours/day, 5 days/week for 90 days.

(ii) *Reporting requirements.* (A) The subchronic inhalation toxicity test shall be completed and the final report submitted to EPA within 15 months of the effective date of the final rule.

(B) Interim progress reports shall be submitted to EPA for the subchronic inhalation toxcity test at 6-month intervals beginning 6 months after the effective date of the final rule, until the final report is submitted to EPA.

(2) *Oncogenicity*—(i) *Required testing.* (A) An oncogenicity test shall be conducted with commercial hexane in accordance with § 798.3300 of this chapter except for the provisions in paragraphs (b)(3)(ii) and (6) of § 798.3300.

(B) For the purposes of this section, the following provisions also apply:

(*1*) *High dose level.* The high dose level should elicit signs of minimal toxicity without substantially altering the normal life span and should not exceed the lower explosive limit of commercial hexane.

(*2*) *Administration of test substance.* Animals shall be exposed to commercial hexane by inhalation.

(ii) *Reporting requirements.* (A) The oncogenicity test shall be completed and the final report submitted to EPA within 53 months of the effective date of the final rule. The mouse portion of the oncogenicity study shall be submitted by June 5, 1993.

(B) Interim progress reports shall be submitted to EPA for the oncogenicity test at 6-month intervals beginning 6 months after the effective date of the final rule, until the final report is submitted to EPA.

(3) *Reproduction and fertility effects*—(i) *Required testing.* (A) A reproduction and fertility effects test shall be conducted with commercial hexane in accordance with § 798.4700 of this chapter except for the provisions in paragraphs (c)(3)(ii) and (5) of § 798.4700.

(B) For the purposes of this section, the following provisions also apply:

(*1*) *High dose level.* The highest dose level should induce toxicity but not high levels of mortality in the parental (P) animals. In addition, the highest dose level should not exceed the lower explosive limit of commercial hexane.

(*2*) *Administration of test substance.* Animals shall be exposed to commercial hexane by inhalation.

(ii) *Reporting requirements.* (A) The reproduction and fertility effects test shall be completed and the final report submitted to EPA within 29 months of the effective date of the final rule.

(B) Interim progress reports shall be submitted to EPA for the reproduction and fertility effects test at 6-month intervals beginning 6 months after the effective date of the final rule, until the final report is submitted to EPA.

(4) *Inhalation developmental toxicity*—(i) *Required testing.* (A) An inhalation developmental toxicity test shall be conducted with commercial hexane in accordance with § 795.4350 of this chapter except for the provisions in paragraph (e)(3)(iv) of § 798.4350.

(B) For the purposes of this section, the following provisions also apply:

(*1*) *High dose level.* Unless limited by the physical/chemical nature or biological properties of the test substance, the highest concentration level shall induce some overt maternal toxicity such as reduced body weight or body weight gain, but not more than 10 percent maternal deaths. In addition, the highest dose level should not exceed the lower explosive limit of commercial hexane.

(*2*) [Reserved]

(ii) *Reporting requirements.* (A) The inhalation developmental toxicity test shall be completed and the final report submitted to EPA within 12 months of the effective date of the final rule.

(B) Interim progress reports shall be submitted to EPA for the inhalation developmental toxicity test at 6-month intervals beginning 6 months after the effective date of the final rule, until the final report is submitted to EPA.

(5) *Mutagenic effects—gene mutations*—(i) *Required testing.* (A)(*1*) A *Salmonella typhimurium* reverse mutation assay shall be conducted with commercial hexane in accordance with § 798.5265 of this chapter except for the provisions in paragraphs (d)(4) and (e) of § 798.5265.

(*2*) For the purposes of this section, the following provisions also apply:

(*i*) *Metabolic activation*. Bacteria shall be exposed to commercial hexane both in the presence and absence of an appropriate metabolic activation system.

(*ii*) *Test performance.* The assay shall be performed using the desiccator method described as follows: The agar overlay plates shall be placed uncovered in a 9-liter desiccator. A volume of the liquid test substance shall be added to the glass Petri dish suspended beneath the porcelain shelf of the desiccator. The highest exposure concentration should not result in a vapor concentration which exceeds the lower explosive limit of commerical hexane. A magnetic stirring bar to serve as a fan to assure rapid and even distribution of the vapor shall be placed on the bottom of the inside of the desiccator. The desiccator shall be placed on a magnetic stirrer within a 37° C room or chamber for 7 to 10 hours. The plates shall then be removed, their lids replaced, followed by incubation for an additional

40 hours at 37° C before counting. An appropriate selective medium with an adequate overlay agar shall be used. All plating should be done in at least triplicate.

(B)(*1*) A gene mutation test in mammalian cells shall be conducted with commercial hexane in accordance with §798.5300 of this chapter except for the provisions in paragraphs (d)(3)(ii) and (4) of §798.5300 if the results from the *Salmonella typhimurium* test conducted pursuant to paragraph (c)(5)(i)(A) of this section are negative.

(*2*) For the purposes of this section, the following provisions also apply:

(*i*) *Cell growth and maintenance.* Appropriate culture media and incubation conditions (culture vessels, CO_2 concentrations, temperature, and humidity) shall be used. The cell culture shall be directly dosed by pipetting liquid commercial hexane mixed with liquid DMSO into the culture medium. Cells shall be exposed to test substance both in the presence and absence of an appropriate metabolic activation system.

(*ii*) [Reserved]

(C)(*1*) A sex-linked recessive lethal test in *Drosophila melanogaster* shall be conducted with commercial hexane in accordance with §798.5275 of this chapter except for the provisions in paragraphs (d)(5) (ii) and (iii) of §798.5275, unless the results of both the *Salmonella typhimurium* test conducted pursuant to paragraph (c)(5)(i)(A) of this section and the mammalian cells in the culture gene mutation test conducted pursuant to paragraph (c)(5)(i)(B) of this section, if required, are negative.

(*2*) For the purposes of this section, the following provisions also apply:

(*i*) *Dose levels.* For the initial assessment of mutagenicity, it is sufficient to test a single dose of the test substance for screening purposes. This dose should be the maximum tolerated dose, or that which produces some indication of toxicity or shall be the highest dose attainable and should not exceed the lower explosive limit of commercial hexane. For dose-response purposes, at least three additional dose levels should be used.

(*ii*) *Route of administration.* The route of administration shall be by exposure to commercial hexane vapors.

(D)(*1*) Unless the results of the sex-linked recessive lethal test in *Drosophila melanogaster* conducted with commercial hexane pursuant to paragraph (c)(5)(i)(C) of this section are negative, EPA shall conduct a public program review of all of the mutagenicity data available for this substance. If, after this review, EPA decides that testing of commercial hexane for causing heritable gene mutations in mammals is necessary, it shall notify the test sponsor by certified letter or FEDERAL REGISTER notice that testing shall be initiated in either the mouse visible specific locus test or the mouse biochemical specific locus test. The mouse visible specific locus test, if conducted, shall be performed for commercial hexane in accordance with §798.5200 of this chapter except for the provisions in paragraphs (d)(5)(ii) and (d)(5)(iii) of §798.5200. The mouse biochemical specific locus test, if conducted, shall be performed for commercial hexane in accordance with §798.5195 of this chapter except for the provisions in paragraphs (d)(5)(ii) and (d)(5)(iii) of §798.5195.

(*2*) For the purposes of this section, the following provisions also apply:

(*i*) *Dose levels.* A minimum of two dose levels shall be tested. The highest dose tested shall be the highest dose tolerated without toxic effects, provided that any temporary sterility induced due to elimination of spermatogonia is of only moderate duration, as determined by a return of males to fertility within 80 days of treatment, or shall be the highest dose attainable below the lower explosive limit concentration of commercial hexane. Exposure shall be for 6 hours a day. Duration of exposure shall be dependent upon the accumulated total dose desired for each group.

(*ii*) *Route of administration.* Animals shall be exposed to commercial hexane by inhalation.

(ii) *Reporting requirements.* (A) The gene mutation tests shall be completed and final reports submitted to EPA as follows:

(*1*) The *Salmonella typhimurium* reverse mutation assay within 8 months of the effective date of the final rule.

(*2*) The gene mutation in mammalian cells assay within 17 months of the effective date of the final rule.

(*3*) The sex-linked recessive-lethal test in *Drosophila melanogaster* within 24 months of the effective date of the final rule.

(*4*) The mouse visible specific locus test or the mouse biochemical specific locus test shall be completed and a final report shall be submitted to EPA within 51 months of the date on which the test sponsor is notified by EPA by certified letter or FEDERAL REGISTER notice that testing shall be initiated.

(B) Interim progress reports for each test shall be submitted to EPA for the gene mutation in mammalian cells assay and *Drosophila* sex-linked recessive lethal test at 6-month intervals beginning 6 months after the effective date of the final rule, until the applicable final report is submitted to EPA.

(C) Interim progress reports for either the mouse visible specific locus test or the mouse biochemical specific locus test shall be submitted to EPA at 6–month intervals, beginning 6 months after EPA's notification of the test sponsor that testing should be initiated, until the applicable final report is submitted to EPA.

(6) *Mutagenic effects—chromosomal aberrations*—(i) *Required testing.* (A)(*1*) An *in vitro* cytogenetics test shall be conducted with commercial hexane in accordance with § 798.5375 of this chapter except for the provisions in paragraph (e)(3) of § 798.5375.

(*2*) For the purposes of this section, the following provisions also apply:

(*i*) *Treatment with test substance.* The test substance shall be added in liquid form mixed with DMSO to the treatment vessels.

(*ii*) [Reserved]

(B)(*1*) An *in vivo* cytogenetics test shall be conducted with commercial hexane in accordance with § 798.5385 of this chapter except for the provisions in paragraphs (d)(5) (ii), (iii) and (iv) of § 798.5385, if the *in vitro* test conducted pursuant to paragraph (c)(6)(i)(A) of this section is negative.

(*2*) For the purposes of this section, the following provisions also apply:

(*i*) *Dose levels.* For an initial assessment, one dose level of the test substance may be used, the dose being the maximum tolerated dose (to a maximum of 5,000 mg/kg), or that producing some indication of cytotoxicity (e.g., partial inhibition of mitosis), or shall be the highest dose attainable (to a maximum of 5,000 mg/kg) and should not exceed the lower explosive limit of commercial hexane. Additional dose levels may be used. For determination of dose-response, at least three dose levels should be used.

(*ii*) *Route of administration.* Animals shall be exposed to commercial hexane by inhalation.

(*iii*) *Treatment schedule.* The duration of exposure shall be for 6 hours per day for 5 consecutive days.

(C)(*1*) A dominant lethal assay shall be conducted with commercial hexane in accordance with § 798.5450 of this chapter except for the provisions in paragraphs (d)(5) (ii) and (iii) of § 798.5450, unless both the *in vitro* and *in vivo* cytogenetics tests conducted pursuant to paragraphs (c)(6)(i) (A) and (B) of this section are negative.

(*2*) For the purposes of this section, the following provisions also apply:

(*i*) *Dose levels.* Normally, three dose levels shall be used. The highest dose shall produce signs of toxicity (e.g., slightly reduced fertility and slightly reduced body weight). The highest dose should not exceed the lower explosive limit of commercial hexane. However, in an initial assessment of dominant lethality, a single high dose may be sufficient. Nontoxic substances shall be tested at 5 g/kg or, if this is not practicable, then at the highest dose attainable.

(*ii*) *Route of administration.* Animals shall be exposed to commercial hexane by inhalation.

(*iii*) *Treatment schedule.* The duration of exposure shall be for 6 hours per day for 5 consecutive days.

(D)(*1*) A heritable translocation test shall be conducted with commercial hexane in accordance with § 798.5460 of this chapter except for the provisions in paragraphs (d)(5) (ii) and (iii) of § 798.5460, if the results of the dominant lethal assay conducted pursuant to paragraph (c)(6)(i)(C) of this section are positive and if, after a public program

review, EPA issues a FEDERAL REGISTER notice or sends a certified letter to the test sponsor specifying that the testing shall be initiated.

(*2*) For the purposes of this section, the following provisions also apply:

(*i*) *Dose levels.* At least two dose levels shall be used. The highest dose level shall result in toxic effects (which shall not produce an incidence of fatalities which would prevent a meaningful evaluation) or shall be the highest dose attainable or 5 g/kg body weight and should not exceed the lower explosive limit of commercial hexane.

(*ii*) *Route of administration.* Animals shall be exposed to commercial hexane by inhalation.

(*iii*) *Reporting requirements.* (A) The chromosomal aberration tests shall be completed and the final reports submitted to EPA as follows:

(*1*) The *in vitro* cytogenetics test within 15 months of the effective date of the final rule.

(*2*) The *in vivo* cytogenetics test within 19 months of the effective date of the final rule.

(*3*) The dominant lethal assay within 28 months of the effective date of the final rule.

(*4*) The heritable translocation test within 25 months of the date of EPA's notification of the test sponsor by certified letter or FEDERAL REGISTER notice that testing shall be initiated.

(B) Interim progress reports for each test shall be submitted to EPA for the *in vivo* cytogenetics and the dominant lethal assays at 6-month intervals beginning 6 months after the effective date of the final rule, until the applicable final report is submitted to EPA.

(C) Interim progress reports shall be submitted to EPA for the heritable translocation assay at 6-month intervals beginning 6 months after the date of EPA's notification of the test sponsor that testing shall be initiated, until the final report is submitted to EPA.

(*7*) *Neutrotoxicity*—(i) *Required testing.* (A)(*1*) A schedule-controlled operant behavior test shall be conducted with commercial hexane in accordance with § 798.6500 of this chapter except for the provisions in paragraphs (d)(5)(i), (6) and (7) of § 798.6500.

(*2*) For the purposes of this section, the following provisions also apply:

(*i*) *High dose level.* The highest dose shall produce clear behavioral effects or life-threatening toxicity. In addition, the highest dose should not exceed the lower explosive limit of commercial hexane.

(*ii*) *Duration and frequency of exposure.* Animals shall be dosed once for 4 to 6 hours.

(*iii*) *Route of administration.* Animals shall be exposed to commercial hexane by inhalation.

(B)(*1*) A functional observation battery shall be conducted with commercial hexane in accordance with § 798.6050 of this chapter except for the provisions in paragraphs (d)(4)(i), (5), and (6) of § 798.6050.

(*2*) For the purposes of this section, the following provisions also apply:

(*i*) *High dose level.* The highest dose shall produce clear behavioral effects or life-threatening toxicity. In addition, the highest dose should not exceed the lower explosive limit of commercial hexane.

(*ii*) *Duration and frequency of exposure.* Animals shall be dosed for 6 hours/day, 5 days/week for 90 days.

(*iii*) *Route of exposure.* Animals shall be exposed to commercial hexane by inhalation.

(C)(*1*) A motor activity test shall be conducted with commercial hexane in accordance with § 798.6200 of this chapter except for the provisions in paragraphs (d)(4)(i), (5), and (6) of § 798.6200.

(*2*) For the purposes of this section, the following provisions also apply:

(*i*) *High dose level.* The highest dose shall produce clear effects on motor activity of life-threatening toxicity. In addition, the highest dose should not exceed the lower explosive limit of commercial hexane.

(*ii*) *Duration and frequency of exposure.* Animals shall be dosed for 6 hours/day, 5 days/week for 90 days.

(*iii*) *Route of exposure.* Animals shall be exposed to commercial hexane by inhalation.

(D)(*1*) A neuropathology test shall be conducted with commercial hexane in accordance with § 798.6400 of this chapter except for the provisions in paragraphs (d)(4)(i), (5), and (6) of § 798.6400.

(*2*) For the purposes of this section, the following provisions also apply:

(*i*) *High dose level.* The highest dose shall produce clear behavior effects or life-threatening toxicity. In addition, the highest dose should not exceed the lower explosive limit of commercial hexane.

(*ii*) *Duration and frequency of exposure.* Animals shall be dosed for 6 hours/day, 5 days/week for 90 days.

(*iii*) *Route of exposure.* Animals shall be exposed to commercial hexane by inhalation.

(ii) *Reporting requirements.* (A) The schedule-controlled operant behavior, functional observation battery, motor activity, and neuropathology tests shall be completed and the final reports submitted to EPA within 15 months of the effective date of the final rule.

(B) Interim progress reports for each test shall be submitted to EPA for the schedule-controlled operant behavior, functional observation battery, motor activity, and neuropathology tests at 6-month intervals beginning 6 months after the effective date of the applicable final rule, until the applicable final report is submitted to EPA.

(8) *Pharmacokinetics*—(i) *Required testing.* (A) Pharmacokinetics testing shall be conducted in rats in accordance with § 795.232 of this chapter, except for paragraph (c)(1)(ii) of § 795.232.

(B) For the purposes of this section, the following provisions also apply:

(*1*) *Test animals.* Adult male and female rats shall be used for testing. The rats shall be 9 to 11 weeks old and their weight range should be comparable from group to group. The animals shall be purchased from a reputable dealer and shall be permanently identified upon arrival. The animals shall be selected at random for the testing groups, and any animal showing signs of ill health shall not be used.

(*2*) *Species and strain.* The rat strain used shall be the same as the strain used in the subchronic and chronic tests required under § 798.2450(d)(1)(i) and § 798.3300(b)(1)(i).

(ii) *Reporting requirements.* (A) The inhalation and dermal pharmacokinetics tests shall be completed and the final report submitted to EPA by August 21, 1992.

(B) Interim progress reports shall be submitted to EPA for the inhalation and dermal pharmacokinetics tests at 6-month intervals, beginning 6 months after the effective date specified in paragraph (d)(1) of this section, until the final report is submitted to EPA.

(d) *Effective date.* (1) The effective date of this final rule is November 17, 1988, except for the provisions of paragraphs (c)(2)(ii)(A), (c)(5)(i)(D), (c)(5)(ii)(A)(4), (c)(5)(ii)(C), (c)(8)(i) and (c)(8)(ii)(A) of this section. The effective date for paragraphs (c)(5)(i)(D), (c)(5)(ii)(A)(4) and (c)(5)(ii)(C) of this section is May 21, 1990. The effective date for paragraphs (c)(8)(i) and (c)(8)(ii)(A) of this section is June 12,1992. The effective date of paragraph (c)(2)(ii)(A) is September 8, 1994.

(2) The guidelines and other test methods cited in this rule are referenced as they exist on the effective date of the final rule.

[53 FR 3392, Feb. 5, 1988, as amended at 53 FR 38953, Oct. 4, 1988; 55 FR 634, Jan. 8, 1990; 55 FR 7325, Mar. 1, 1990; 55 FR 12643, Apr. 5, 1990; 57 FR 24961, June 12, 1992; 58 FR 34205, June 23, 1993; 59 FR 46357, Sept. 8, 1994; 60 FR 34467, July 3, 1995]

§ 799.2325 Isopropanol.

(a) *Identification of test substance.* (1) Isopropanol (CAS No. 67–63–0) shall be tested in accordance with this section.

(2) Isopropanol of at least 99.8 percent purity shall be used as the test substance.

(b) *Persons required to submit study plans, conduct tests, and submit data.* All persons who manufacture (including import or byproduct manufacture) or intend to manufacture or process isopropanol, from the effective date of this rule to the end of the reimbursement period, shall submit letters of intent to conduct testing, submit study plans, conduct tests, and submit data or submit exemption applications as specified in this section, subpart A of this part, and parts 790 and 792 of this chapter for single-phase rulemaking.

(c) *Health effects testing*—(1) *Subchronic inhalation toxicity*—(i) *Required testing.* A subchronic inhalation toxicity test shall be conducted with isopropanol in accordance with § 798.2450 of this chapter.

(ii) *Reporting requirements.* (A) The subchronic inhalation toxicity test shall be completed and the final report

submitted to EPA within 15 months of the date specified in paragraph (d) of this section.

(B) Progress reports shall be submitted to EPA for the subchronic inhalation toxicity test at 6-month intervals beginning 6 months after the date specified in paragraph (d)(1) of this section until submission of the final report.

(2) *Reproduction and fertility effects*—(i) *Required testing.* A reproduction and fertility effects test shall be conducted by gavage with isopropanol in accordance with § 798.4700 of this chapter.

(ii) *Reporting requirements.* (A) The reproduction and fertility effects test shall be completed and the final report submitted to EPA within 29 months of the date specified in paragraph (d)(1) of this section.

(B) Progress reports shall be submitted at 6-month intervals beginning 6 months after the date specified in paragraph (d)(1) of this section until submission of the final report.

(3) *Developmental toxicity*—(i) *Required testing.* A developmental toxicity test shall be conducted in two mammalian species by gavage with isopropanol in accordance with § 798.4900 of this chapter.

(ii) *Reporting requirements.* (A) The developmental toxicity test shall be completed and the final report submitted to EPA within 12 months of the date specified in paragraph (d)(1) of this section.

(B) A progress report shall be submitted 6 months after the date specified in paragraph (d)(1) of this section.

(4) *Mutagenic effects—gene mutations*—(i) *Required testing.* (A) A gene mutation test in mammalian cells shall be conducted with isopropanol in accordance with § 798.5300 of this chapter.

(B)(*1*) A sex-linked recessive lethal test in *Drosophila melanogaster* shall be conducted with isopropanol in accordance with § 798.5275 of this chapter, except for the provisions in paragraphs (d)(5)(ii) and (iii) of § 798.5275, unless the results of the mammalian cells in the culture gene mutation test conducted pursuant to paragraph (c)(5)(i)(A) of this section are negative.

(*2*) For the purpose of this section, the following provisions also apply:

(*i*) *Route of administration.* The route of administration shall be by exposure to isopropanol vapors or by injection of isopropanol.

(*ii*) [Reserved]

(C)(*1*) The mouse visible specific locus (MVSL) test shall be conducted with isopropanol by inhalation in accordance with § 798.5200, except for the provisions in paragraphs (d)(5)(ii) and (iii) of § 798.5200, if the results of the sex-linked recessive lethal test conducted pursuant to paragraph (c)(4)(i)(B) of this section are positive and if, after a public program review, EPA issues a FEDERAL REGISTER notice or sends a certified letter to the test sponsor specifying that the testing shall be initiated.

(*2*) For the purpose of this section, the following provisions also apply:

(*i*) *Dose levels and duration of exposure.* A minimum of 2 dose levels shall be tested. The duration of exposure shall be for 6 hours per day. Duration of exposure shall be dependent upon accumulated total dose desired for each group.

(*ii*) *Route of administration.* Animals shall be exposed to isopropanol by inhalation.

(ii) *Reporting requirements.* (A) The gene mutation tests shall be completed and final report submitted to EPA as follows:

(*1*) The gene mutation in mammalian cells assay within 6 months of the date specified in paragraph (d)(1) of this section.

(*2*) The sex-linked recessive-lethal test in *Drosophila melanogaster* within 18 months of the date specified in paragraph (d)(1) of this section.

(*3*) The mouse visible specific-locus test within 51 months of the date of EPA's notification of the test sponsor by certified letter or FEDERAL REGISTER notice under paragraph (c)(4)(i)(C) of this section that testing shall be initiated.

(B) Progress reports shall be submitted to EPA for the *Drosophila* sex-linked recessive lethal test at 6-month intervals beginning 6 months after the date specified in paragraph (d)(1) of this section until the submission of the final report.

(C) Progress reports shall be submitted to EPA for the mouse visible

specific locus test at 6-month intervals beginning 6 months after the date of EPA's notification of the test sponsor that testing shall be initiated until submission of the final report.

(5) *Mutagenic effects—chromosomal aberrations*—(i) *Required testing.* (A)(*1*) The micronucleus test shall be conducted with isopropanol in accordance with § 798.5395 of this chapter.

(*2*) For the purpose of this section, the following provisions also apply:

(*i*) *Route of administration.* Animals shall be exposed to isopropanol by either inhalation or oral gavage or inperitoneally (IP).

(*ii*) *Duration of exposure.* For inhalation, the duration of exposure shall be for 6 hours per day for 5 consecutive days with one sacrifice time or for 6 hours for 1 day with three sacrifice times.

(B)(*1*) A dominant lethal assay shall be conducted with isopropanol in accordance with § 798.5450 of this chapter, except for the provisions in paragraphs (d)(5)(ii) and (iii) of § 798.5450, unless the micronucleus test conducted pursuant to paragraphs (c)(5)(i)(A) of this section is negative.

(*2*) For the purpose of this section, the following provisions also apply:

(*i*) *Route of administration.* Animals shall be exposed to isopropanol by inhalation.

(*ii*) *Duration of exposure.* The duration of exposure shall be for 6 hours per day for 5 consecutive days.

(C)(*1*) The mouse visible specific locus test (MVSL) shall be conducted with isopropanol by inhalation in accordance with § 798.5200 of this chapter, except for the provisions in paragraphs (d)(5)(ii) and (d)(5)(iii) of § 798.5200, or a mouse biochemical specific locus test (MBSL) shall be conducted with isopropanol by inhalation in accordance with § 798.5195 of this chapter, except for the provisions in paragraphs (d)(5)(ii) and (d)(5)(iii) of § 798.5195, if the results of the sex-linked recessive lethal test conducted pursuant to paragraph (c)(4)(i)(B) of this section are positive and if, after a public program review, EPA issues a FEDERAL REGISTER notice or sends a certified letter to the test sponsor specifying that the testing shall be initiated.

(*2*) For the purpose of this section, the following provisions also apply:

(*i*) *Route of administration.* Animals shall be exposed to isopropanol by inhalation.

(*ii*) [Reserved]

(ii) *Reporting requirements.* (A) The chromosomal aberration tests shall be completed and the final reports submitted to EPA as follows:

(*1*) The micronucleus test within 15 months of the date specified in paragraph (d)(1) of this section.

(*2*) The dominant lethal assay within 27 months of the date specified in paragraph (d)(1) of this section.

(*3*) The MVSL or MBSL test within 51 months of the date of EPA's notification of the test sponsor by certified letter or FEDERAL REGISTER notice under paragraph (c)(4)(i)(C) of this section that testing shall be initiated.

(B) Progress reports shall be submitted to EPA for the the micronucleus and the dominant lethal assays at 6-month intervals beginning 6 months after the date specified in paragraph (d)(1) of this section until submission of the final report.

(C) Progress reports shall be submitted to EPA for the heritable translocation assay at 6-month intervals beginning 6 months after the date of EPA's notification of the test sponsor that testing shall be initiated until submission of the final report.

(6) *Neurotoxicity*—(i) *Required testing.* (A)(*1*) A functional observation battery shall be conducted with isopropanol in accordance with § 798.6050 of this chapter except for the provisions in paragraphs (d)(5) and (6) of § 798.6050.

(*2*) For the purpose of this section, the following provisions also apply:

(*i*) *Duration and frequency of exposure.* For subchronic study, animals shall be dosed for 6 hours per day, 5 days per week for 90 days. For acute study, animals shall be dosed for 4 to 6 hours once.

(*ii*) *Route of exposure.* Animals shall be exposed to isopropanol by inhalation.

(B)(*1*) A motor activity test shall be conducted with isopropanol in accordance with § 798.6200 of this chapter except for the provisions in paragraphs (d)(5) and (6) of § 798.6200.

(*2*) For the purpose of this section, the following provisions also apply:

(*i*) *Duration of exposure.* For subchronic study, animals shall be dosed for 6 hours per day, 5 days per week for 90 days. For acute study, animals shall be dosed for 4 to 6 hours once.

(*ii*) *Route of exposure.* Animals shall be exposed to isopropanol by inhalation.

(C)(*1*) A neuropathology test shall be conducted with isopropanol in accordance with § 798.6400 of this chapter except for the provisions in paragraphs (d)(5) and (6) of § 798.6400.

(*2*) For the purpose of this section, the following provisions also apply:

(*i*) *Duration of exposure.* Animals shall be dosed for 6 hours per day, 5 days per week for 90 days.

(*ii*) *Route of exposure.* Animals shall be exposed to isopropanol by inhalation.

(D) The developmental neurotoxicity test shall be conducted with isopropanol in accordance with § 795.250 of this chapter, except for paragraph (c)(1)(iv).

(*1*) For purposes of this section, the following provisions also apply:

(*i*) *Numbers of animals.* The objective is for a sufficient number of pregnant rats to be exposed to ensure that an adequate number of offspring are produced for neurotoxicity evaluation. At least 24 litters shall be used at each dose level.

(*ii*) [Reserved]

(*2*) [Reserved]

(ii) *Reporting requirements.* (A) The acute functional observation battery and motor activity tests shall be completed and the final report submitted to EPA within 15 months of the date specified in paragraph (d)(1) of this section. The subchronic functional observation battery, motor activity, and neuropathology tests shall be completed and the final reports submitted to EPA within 18 months of the date specified in paragraph (d)(1) of this section. The developmental neurotoxicity test shall be completed and the final report submitted to EPA within 21 months of the date specified in paragraph (d)(1) of this section.

(B) Progress reports shall be submitted to EPA for the functional observation battery, motor activity, neuropathology, and developmental neurotoxicity tests at 6-month intervals beginning 6 months after the date specified in paragraph (d)(1) of this section until submission of the applicable final report.

(7) *Pharmacokinetics studies*—(i) *Required testing.* An oral and inhalation pharmacokinetics test shall be conducted with isopropanol in accordance with § 795.231 of this chapter.

(ii) *Reporting requirements.* (A) The pharmacokinetic test shall be completed and the final report submitted to EPA within 15 months of the date specified in paragraph (d)(1) of this section.

(B) Progress reports shall be submitted to EPA for the pharmacokinetics test at 6-month intervals beginning 6 months after the date specified in paragraph (d)(1) of this section until submission of the final report.

(8) *Oncogenicity*—(i) *Required testing.* An oncogenicity test shall be conducted by inhalation with isopropanol in accordance with § 798.3300 of this chapter.

(ii) *Reporting requirements.* (A) The oncogenicity test shall be completed and the final report submitted to EPA by July 5, 1994.

(B) Progress reports shall be submitted at 6-month intervals beginning 6 months after the date specified in paragraph (d)(1) of this section until submission of the final report.

(d) *Effective date.* (1) The effective date of this final rule is December 4, 1989, except for the provisions of paragraphs (c)(5)(i)(C)(*1*), (c)(5)(ii)(A)(*3*), (c)(6)(i)(D), and (c)(8)(ii)(A), of this section. The effective date for paragraphs (c)(5)(i)(C)(*1*), and (c)(5)(ii)(A)(*3*) of this section is May 21, 1990. The effective date for paragraphs (c)(6)(i)(D) of this section is May 21, 1991. The effective date of paragraph (c)(8)(ii)(A) is September 29, 1995.

(2) The guidelines and other test methods cited in this rule are references as they exist on the effective date of the final rule.

[54 FR 43262, Oct. 23, 1989, as amended at 55 FR 12644, Apr. 5, 1990; 56 FR 23231, May 21, 1990; 58 FR 34205, June 23, 1993; 60 FR 56956, Nov. 13, 1995]

§ 799.2475 2-Mercaptobenzothiazole.

(a) *Identification of test substance.* (1) 2-Mercaptobenzothiazole (MBT, CAS No. 149–30–4) shall be tested in accordance with this section.

(2) MBT of at least 97.6 percent purity (plus or minus 1.5 percent) shall be used as the test substance.

(b) *Persons required to submit study plans, conduct tests, and submit data.* All persons who manufacture (including byproduct manufacture, and import of MBT and MBT-containing articles) or process or intend to manufacture or process MBT, other than as an impurity, after October 21, 1988, to the end of the reimbursement period shall submit letters of intent to conduct testing, submit study plans, conduct tests, and submit data, or submit exemption applications as specified in this section, subpart A of this part, and parts 790 and 792 of this chapter for single-phase rulemaking.

(c) *Chemical fate*—(1) *Aerobic aquatic biodegradation*—(i) *Required testing.* Aerobic aquatic biodegradation testing shall be conducted with MBT in accordance with § 796.3100 of this chapter.

(ii) *Reporting requirements.* (A) The aerobic aquatic biodegradation test shall be completed and the final report submitted to EPA within 12 months of the effective date of the final rule.

(B) An interim progress report shall be submitted to EPA 6 months after the effective date of the final rule.

(2) *Indirect photolysis-screening level test*—(i) *Required testing.* Indirect photolysis testing shall be conducted with MBT in accordance with § 795.70 of this chapter.

(ii) *Reporting requirements.* (A) The indirect photolysis test shall be completed and the final report submitted to EPA within 12 months of the effective date of the final rule.

(B) An interim progress report shall be submitted to EPA 6 months after the effective date of the final rule.

(3) *Chemical mobility*—(i) *Required testing.* Chemical mobility testing shall be conducted with MBT in accordance with § 796.2750 of this chapter.

(ii) *Reporting requirements.* (A) The chemical mobility test shall be completed and the final report submitted to EPA within 12 months of the effective date of the final rule.

(B) An interim progress report shall be submitted to EPA 6 months after the effective date of this final rule.

(d) *Environmental effects*—(1) *Fish chronic toxicity*—(i) *Required testing.* (A) Chronic toxicity testing of MBT shall be conducted using rainbow trout (*Salmo gairdneri.*) according to § 797.1600 of this chapter, except for paragraphs (c)(4)(iv)(A), (c)(4)(x)(E) and (c)(4)(x)(F), (c)(6)(iv)(A), (d)(2)(vii)(A)(*2*), and (d)(3)(iv) of § 797.1600.

(B) For the purpose of this section, the following provisions also apply:

(*1*) The first feeding for the fathead and sheepshead minnow fry shall begin shortly after transfer of the fry from the embryo cups to the test chambers. Silversides are fed the first day after hatch. Trout species initiate feeding at swim-up. The trout fry shall be fed trout starter mash or live newly-hatched brine shrimp nauplii (*Artemia salina*) three times a day *ad libitum*, with excess food siphoned off daily. The minnow fry shall be fed live newly-hatched brine shrimp nauplii (*Artemia salina*) at least three times a day.

(*2*) All physical abnormalities (e.g., stunted bodies, scoliosis, etc.) shall be photographed and preserved.

(*3*) At termination, all surviving fish shall be measured for growth. Total length measurements should be used except in cases where fin erosion occurs, then the use of standard length measurements shall be permitted. Standard length measurements should be made directly with a caliper, but may be measured photographically. Measurements shall be made to the nearest millimeter (0.1 mm is desirable). Weight measurements shall also be made for each fish alive at termination (wet, blotted dry, and to the nearest 0.01 g for the minnows and 0.1 g for the trout). If the fish exposed to the toxicant appear to be edematous compared to control fish, determination of dry, rather than wet, weight is recommended.

(*4*)(*i*) *Test substance measurement.* Prior to addition of the test substance to the dilution water, it is recommended that the test substance stock solution be analyzed to verify the concentration. After addition of the test substance, the concentration of test substance shall be measured in

the test substance delivery chamber prior to beginning, and during, the test. The concentration of test substance should also be measured at the beginning of the test in each test concentration (including both replicates) and control(s), and at least once a week thereafter. Equal aliquots of test solution may be removed from each replicate chamber and pooled for analysis. If a malfunction in the delivery system is discovered, water samples shall be taken from the affected test chambers immediately and analyzed.

(*ii*) *pH.* It is recommended that a pH of 7 be maintained in the test chambers.

(*iii*) *Reporting.* An analysis of the stability of the stock solution for the duration of the test shall be reported.

(*5*) [Reserved]

(*6*) For brook and rainbow trout, a 16–hour light and 8–hour dark photoperiod shall be provided.

(ii) *Reporting requirements.* (A) The fish chronic toxicity test shall be completed and the final report submitted to EPA within 12 months of the effective date of the final rule.

(B) An interim progress report shall be submitted to EPA 6 months after the effective date of the final rule.

(2) *Daphnid chronic toxicity*—(i) *Required testing.* (A) Daphnid chronic toxicity testing shall be conducted with MBT using *Daphnia magna* according to § 797.1330 of this chapter.

(B) For the purposes of this section, the following provisions also apply:

(*1*) *Test substance measurement.* Test substance concentration shall be measured in the test substance delivery chamber prior to beginning, and during, the test.

(*2*) *pH.* It is recommended that a pH of 7 be maintained in the test chambers.

(*3*) *Reporting.* An analysis of the stability of the stock solution for the duration of the test shall be reported and data comparing trout starter mash with *A. salina* for supporting trout growth should be submitted with the final report.

(ii) *Reporting requirements.* (A) The daphnid chronic toxicity test shall be completed and the final report submitted to EPA within 12 months of the effective date of the final rule.

(B) An interim progress report shall be submitted to EPA 6 months after the effective date of the final rule.

(e) *Health effects*—(1) *Developmental toxicity testing*—(i) *Required testing.* Developmental toxicity testing shall be conducted in two mammalian species with MBT in accordance with § 798.4900 of this chapter, using the oral route of administration.

(ii) *Reporting requirements.* (A) The developmental toxicity test shall be completed and the final report submitted to EPA within 12 months of the effective date of the final rule.

(B) An interim progress report shall be submitted to EPA 6 months after the effective date of the final rule.

(2) *Reproductive toxicity*—(i) *Required testing.* Reproductive toxicity testing shall be conducted with MBT in accordance with § 798.4700 of this chapter, using the oral route of administration.

(ii) *Reporting requirements.* (A) The reproductive test shall be completed and the final report submitted to EPA within 29 months of the effective date of the final rule.

(B) Progress reports shall be submitted to EPA at 6-month intervals beginning 6 months after the effective date of the final rule until submission of the final report.

(3) *Neurotoxicity*—(i) *Required testing.* (A)(*1*) An acute and subchronic functional observation battery shall be conducted with MBT in accordance with § 798.6050 of this chapter except for the provisions in paragraphs (d)(5) and (6) of § 798.6050.

(*2*) For the purpose of this section, the following provisions also apply:

(*i*) *Duration and frequency of exposure.* For acute study, animals shall be administered MBT over a period not to exceed 24 hours. For subchronic study, animals shall be dosed daily for at least 90 days.

(*ii*) *Route of exposure.* Animals shall be exposed to MBT orally.

(B)(*1*) An acute and subchronic motor activity test shall be conducted with MBT in accordance with § 798.6200 of this chapter except for the provisions in paragraphs (d)(5) and (6) of § 798.6200.

(*2*) For the purpose of this section the following provisions also apply:

(*i*) *Duration and frequency of exposure.* For acute study, animals shall be administered over a period not to exceed 24 hours. For subchronic study, animals shall be dosed daily for at least 90 days.

(*ii*) *Route of exposure.* Animals shall be exposed to MBT orally.

(C)(*1*) A subchronic neuropathology test shall be conducted with MBT in accordance with § 798.6400 of this chapter except for the provisions in paragraphs (d)(5) and (6) of § 798.6400.

(*2*) For the purpose of this section, the following provisions also apply:

(*i*) *Duration and frequency of exposure.* Animals shall be dosed daily for at least 90 days.

(*ii*) *Route of exposure.* Animals shall be exposed to MBT orally.

(ii) *Reporting requirements.* (A) The functional observation battery, motor activity, and neuropathology tests shall be completed and the final reports for each test submitted to EPA within 18 months of the effective date of the final rule.

(B) A progress report shall be submitted to EPA for the functional observation battery, motor activity, and neuropathology tests, respectively, 6 months after the effective date of the final rule.

(4) *Mutagenic effects—Chromosomal aberrations*—(i) *Required testing.* (A) A dominant lethal assay shall be conducted with MBT in accordance with § 798.5450 of this chapter, using the oral route of administration.

(B) A heritable translocation assay shall be conducted with MBT in accordance with the test guideline specified in § 798.5460 of this chapter if MBT produces a positive result in the dominant lethal assay conducted pursuant to paragraph (e)(4)(i)(A) of this section and if, after a public program review, EPA issues a FEDERAL REGISTER notice or sends a certified letter to the test sponsor specifying that the testing shall be initiated.

(ii) *Reporting requirements.* (A) Mutagenic effects—Chromosomal aberration testing of MBT shall be completed and the final report submitted to EPA as follows: Dominant lethal assay, within 12 months after the effective date of this rule; heritable translocation assay, within 24 months after notification under paragraph (e)(4)(i)(B) of this section that the testing shall be initiated.

(B) For the dominant lethal assay, an interim progress report shall be submitted to EPA 6 months after the effective date of the final rule; for the heritable translocation assay, progress reports shall be submitted to EPA at 6-month intervals beginning 6 months after the date of EPA's notification of the test sponsor that testing shall be initiated until submission of the final report.

(f) *Effective date.* (1) The effective date of this final rule is October 21, 1988, except for paragraphs (a)(2), (d)(1)(i), (d)(2)(i)(B)(*3*), and (e)(3)(ii)(A) of this section. The effective date for paragraphs (a)(2), (d)(1)(i), (d)(2)(i)(B)(*3*), and (e)(3)(ii)(A) of this section is March 1, 1990.

(2) The guidelines and other test methods cited in this rule are referenced as they exist on the effective date of the final rule.

[53 FR 34530, Sept. 7, 1988; 53 FR 37393, Sept. 26, 1988, as amended at 55 FR 7326, Mar. 1, 1990; 58 FR 34205, June 23, 1993]

§ 799.2700 Methyl ethyl ketoxime.

(a) *Identification of test substance.* (1) Methyl ethyl ketoxime (MEKO, CAS No. 96–29–7) shall be tested in accordance with this section.

(2) MEKO of at least 99 percent purity shall be used as the test substance.

(b) *Persons required to submit study plans, conduct tests, and submit data.* All persons who manufacture (including import) or process or intend to manufacture or process MEKO, including persons who manufacture or process or intend to manufacture or process MEKO as a byproduct, or who import or intend to import products which contain MEKO, after the date specified in paragraph (e) of this section to the end of the reimbursement period, shall submit letters of intent to conduct testing, submit study plans, conduct tests and submit data, or submit exemption applications, as specified in this section, subpart A of this part, and parts 790 and 792 of this chapter for single-phase rulemaking. Persons who manufacture, import, or process MEKO only as an impurity are not subject to these requirements.

(c) *Health effects testing*—(1) *Pharmacokinetics testing*—(i) *Required testing.* Pharmacokinetics testing shall be conducted with MEKO in accordance with paragraph (c)(1)(ii) of this section.

(ii) [Reserved]

(2) *Oncogenicity*—(i) *Required testing.* Oncogenicity testing shall be conducted in accordance with § 798.3300 of this chapter.

(ii) *Route of administration.* MEKO shall be administered either orally or by inhalation.

(iii) *Reporting requirements.* (A) Oncogenicity testing shall be completed and a final report submitted to EPA within 53 months of the date specified in paragraph (e) of this section.

(B) Interim progress reports shall be submitted to EPA at 6-month intervals, beginning 6 months after the date specified in paragraph (e) of this section, until submission of the final report to EPA.

(3) *Developmental toxicity*—(i) *Required testing.* Developmental toxicity testing shall be conducted in a rodent and a nonrodent mammalian species in accordance with § 798.4900 of this chapter.

(ii) *Route of administration.* MEKO shall be administered orally.

(iii) *Reporting requirements.* (A) Developmental toxicity testing shall be completed and a final report submitted to EPA within 15 months of the date specified in paragraph (e) of this section.

(B) Interim progress reports shall be submitted to EPA at 6-month intervals, beginning 6 months after the date specified in paragraph (e) of this section.

(4) *Reproductive toxicity*—(i) *Required testing.* (A) Reproductive toxicity testing shall be conducted orally in accordance with § 798.4700 of this chapter except for the provisions in paragraphs (c) (8)(iii) and (9)(i) of § 798.4700.

(B) For the purpose of this section, the following provisions also apply:

(*1*) The following organs and tissues, or representative samples thereof, shall be preserved in a suitable medium for possible future histopathological examination: Vagina, uterus, oviducts, ovaries, testes, epididymides, vas deferens, seminal vesicles, prostate, pituitary gland, and, target organ(s) of all P and F_1 animals selected for mating.

(*2*)(*i*) Full histopathology shall be conducted on the organs and tissues listed in paragraph (c)(4)(i)(B)(*1*) of this section for all high dose and control P and F_1 animals selected for mating.

(*ii*) The integrity of the various cell stages of spermatogenesis shall be determined, with particular attention directed toward achieving optimal quality in the fixation and embedding. Preparations of testicular and associated reproductive organ samples for histology should follow the recommendations of Lamb and Chapin (1985) under paragraph (d)(1) of this section, or an equivalent procedure. Histopathology of the testes shall be conducted on all P and F_1 adult males at the time of sacrifice, and histological analyses shall include evaluations of the spermatogenic cycle, i.e., the presence and integrity of the 14 cell stages. These evaluations should follow the guidance provided by Clermont and Percy (1957) under paragraph (d)(2) of this section. Information shall also be provided regarding the nature and level of lesions observed in control animals for comparative purposes.

(*iii*) Data on female cyclicity shall be obtained by conducting vaginal cytology in P and F_1 females over the last 3 weeks prior to mating; the cell staging technique of Sadleir (1978) and the vaginal smear method in Hafez (1978) under paragraphs (d)(3) and (d)(7) of this section, respectively, or equivalent methods should be used. Data shall be provided on whether the animal is cycling and the cycle length.

(*iv*) P and F_1 females shall continue to be exposed to MEKO for at least an additional 2 weeks following weaning of offspring to permit them to begin cycling once again. They shall then be sacrificed and their ovaries shall be serially sectioned with a sufficient number of sections examined to adequately detail oocyte and follicular morphology. The methods of Mattison and Thorgiersson (1979) and Pederson and Peters (1968) under paragraphs (d) (4) and (5) of this section, respectively, may provide guidance. The strategy for sectioning and evaluation is left to the discretion of the investigators, but shall be described in detail in the study plan and final report. The nature and

background level of lesions in control tissue shall also be noted.

(*v*) Gross and histopathologic evaluations shall be conducted on the mammary glands in F_1 females and F_2 pups sacrificed at weaning and in adult F_1 females at the termination of the study. Any abnormalities shall be described in the final report.

(ii) *Reporting requirements.* (A) Reproductive toxicity testing shall be completed and a final report submitted to EPA within 29 months of the date specified in paragraph (e) of this section.

(B) Interim progress reports shall be submitted to EPA at 6-month intervals, beginning six months after the date specified in paragraph (e) of this section until submission of the final report to EPA.

(5) *Mutagenic effects—gene mutations*—(i) *Required testing.* The sex-linked recessive lethal assay in *Drosophila* shall be conducted with MEKO in accordance with § 798.5275 of this chapter.

(ii) *Reporting requirements.* (A) The sex-linked recessive lethal assay in *Drosophila* shall be completed and a final report submitted to EPA within 18 months of the date specified in paragraph (e) of this section.

(B) Interim progress reports shall be submitted to EPA at 6-month intervals beginning 6 months after the date specified in paragraph (e) of this section.

(6) *Mutagenic effects—chromosomal aberrations*—(i) *Required testing.* (A) An in vivo mammalian bone marrow cytogenetics test shall be conducted with MEKO in accordance with either § 798.5385 (chromosomal analysis) of this chapter, or § 798.5395 (micronucleus assay) of this chapter except for the provisions in paragraphs (d)(5) (ii), (iii), and (iv) of §§ 798.5385 and 798.5395.

(B) For the purpose of this section, the following provisions also apply if § 798.5385 of this chapter is used in conducting the test:

(*1*) *Dose levels and duration of exposure.* At least three dose levels shall be tested. The highest dose tested shall be the maximum tolerated dose or that dose producing some signs of cytotoxicity (e.g., partial inhibition of mitosis) or shall be the highest dose attainable. Under oral administration, animals shall be exposed once per day for 5 consecutive days. Under administration by inhalation, animals shall be exposed 6 hours per day for 5 consecutive days.

(*2*) *Route of administration.* Animals shall be exposed to MEKO either orally or by inhalation.

(C) For the purpose of this section, the following provisions also apply if § 798.5395 of this chapter is used in conducting the test:

(*1*) *Dose levels and duration of exposure.* At least three-dose levels shall be tested. The highest dose tested shall be the maximum tolerated dose or that dose producing some signs of cytotoxicity (e.g., a change in the ratio of polychromatic to normochromatic erythrocytes) or shall be the highest dose attainable. Under oral administration animals shall be exposed once per day for 5 consecutive days. Under administration by inhalation, animals shall be exposed 6 hours per day for 5 consecutive days.

(*2*) *Route of administration.* Animals shall be exposed to MEKO either orally or by inhalation.

(ii) *Reporting requirements.* (A) The oral in vivo mammalian cytogenetics test shall be completed and a final report submitted to EPA within 14 months of the date specified in paragraph (e) of this section. The inhalation in vivo mammalian cytogenetics test shall be completed and a final report submitted to EPA within 17 months of the date specified in paragraph (e) of this section.

(B) Interim progress reports shall be submitted to EPA at 6-month intervals, beginning 6 months after the date specified in paragraph (e) of this section.

(7) *Neurotoxicity*—(i) *Required testing*—(A) *Functional observational battery.* (*1*) A functional observational battery shall be conducted with MEKO in accordance with § 798.6050 of this chapter except for the provisions in paragraphs (d) (4)(ii), (5), and (6) of § 798.6050.

(*2*) For the purpose of this section, the following provisions also apply:

(*i*) *Route of exposure.* Animals shall be exposed either orally or by inhalation.

(*ii*) *Lower doses.* The data from the lower doses shall show either graded dose-dependent effects in at least two of all the doses tested, including the

highest dose, or no neurotoxic (behavioral) effects at any dose tested.

(*iii*) *Duration and frequency of exposure.* For the oral acute testing, animals shall be exposed once. For the oral subchronic testing, animals shall be exposed once per day 5 days per week for a 90-day period. For the inhalation acute testing, animals shall be exposed for 6 hours for 1 day. For the inhalation subchronic testing, animals shall be exposed 6 hours per day 5 days per week for a 90-day period.

(B) *Motor activity.* (*1*) A motor activity test shall be conducted with MEKO in accordance with § 798.6200 of this chapter except for provisions in paragraphs (d) (4)(ii), (5), and (6) of § 798.6200.

(*2*) For the purpose of this section, the following provisions also apply:

(*i*) *Route of exposure.* Animals shall be exposed either orally or by inhalation.

(*ii*) *Lower doses.* The data from the lower doses shall show either graded dose-dependent effects in at least two of all the doses tested including the highest dose, or no neurotoxic (behavioral) effects at any dose tested.

(*iii*) *Duration and frequency of exposure.* For the acute oral testing, animals shall be exposed once. For the oral subchronic testing, animals shall be exposed once per day 5 days per week for a 90-day period. For the acute inhalation testing, animals shall be exposed for 6 hours for 1 day. For the inhalation subchronic testing, the animals shall be exposed for 6 hours per day 5 days per week for a 90-day period.

(C) *Neuropathology.* (*1*) A neuropathology test shall be conducted with MEKO in accordance with § 798.6400 of this chapter except for the provisions in paragraphs (d) (4)(ii), (5), (6), and (8)(iv)(C) of § 798.6400.

(*2*) For the purpose of this section, the following provisions also apply:

(*i*) *Route of exposure.* Animals shall be exposed either orally or by inhalation.

(*ii*) *Lower doses.* The data from the lower doses shall show either graded dose-dependent effects in at least two of all the doses tested including the highest dose, or no neurotoxic (behavioral) effects at any dose tested.

(*iii*) *Duration and frequency of exposure.* Animals shall be exposed orally once per day 5 days per week for a 90-day period; or if exposed by inhalation, for 6 hours per day 5 days per week for a 90-day period.

(*iv*) *Clearing and embedding.* After dehydration, tissue specimens shall be cleared with xylene and embedded in paraffin or paraplast except for the sural nerve which should be embedded in plastic. Multiple tissue specimens (e.g., brain, cord, ganglia) may be embedded together in one single block for sectioning. All tissue blocks shall be labeled to provide unequivocal identification. A suggested method for plastic embedding is described by Spencer et al. in paragraph (d)(6) of this section.

(ii) *Reporting requirements.* (A) The neurotoxicity tests required under this paragraph (c)(7) and administered orally shall be completed and the final results submitted to EPA within 18 months of the date specified in paragraph (e) of this section. The neurotoxicity tests required under this paragraph (c)(7) and administered by inhalation shall be completed and the final results submitted to EPA within 21 months of the date specified in paragraph (e) of this section.

(B) Interim progress reports shall be submitted to EPA at 6-month intervals beginning 6 months after the date specified in paragraph (e) of this section until submission of the final report to EPA.

(d) *References.* For additional background information, the following references should be consulted.

(1) Lamb, J. and Chapin, R.E. ''Experimental models of male reproductive toxicology.'' In: ''Endocrine Toxicity.'' Thomas, J.A., Korach, K.S., and McLachlan, J.A., eds. New York, NY: Raven Press. pp. 85–115. (1985).

(2) Clermont, Y. and Percey, B. ''Quantitative study of the cell population of the seminiferous tubules in immature rats.'' ''American Journal of Anatomy.'' 100:241–267. (1957).

(3) Sadleir, R.M.F.S. ''Cycles and seasons.'' In: ''Reproduction in Mammals: I. Germ Cells and Fertilization.'' Austin, R. and Short R.V., eds. New York, NY: Cambridge Press. Chapter 4. (1978).

(4) Mattison, D.R. and Thorgiersson, S.S. ''Ovarian aryl hydrocarbon hydroxylase activity and primordial oocyte toxicity of polycyclic aromatic hydrocarbons in mice.'' ''Cancer Research.'' 39:3471–3475. (1979).

(5) Pederson, T. and Peters, H. ''Proposal for classification of oocytes and follicles in

the mouse ovary.'' ''Journal of Reproduction and Fertility.'' 17:555–557. (1968).

(6) Spencer, P.S., Bischoff, M., and Schaumburg, H.H. ''Neuropathological methods for the detection of neurotoxic disease.'' In: ''Experimental and Clinical Neurotoxicology.'' Spencer, P.S. and Schaumburg, H.H., eds. Baltimore, MD: Williams and Wilkins, pp. 743–757 (1980).

(7) Hafez, E.S., ed., ''Reproduction and Breeding Techniques for Laboratory Animals.'' Chapter 10. Philadelphia: Lea and Febiger. (1970).

(e) *Effective dates.* (1) The effective date of this final rule is October 27, 1989.

(2) The guidelines and other test methods cited in this section are referenced here as they exist on October 27, 1989.

[54 FR 37808, Sept. 13, 1989, as amended at 58 FR 34205, June 23, 1993]

§ 799.3300 Unsubstituted phenylenediamines.

(a) *Identification of test substance.* (1) The unsubstituted phenylenediamines (pda's), *para*-phenylenediamine (*p*-pda, CAS No. 106–50–3), or its sulfate salt (*p*-pda.H_2SO_4, CAS No. 1624–57–75), *meta*-phenylenediamine (*m*-pda, CAS No. 108–45–2), or its sulfate salt (*m*-pda.H_2SO_4, CAS No. 54–17–08), and *ortho*-phenylenediamine (*o*-pda, CAS No. 95–54–5) shall be tested in accordance with this section.

(2) *p*-Pda, *m*-pda, and *o*-pda of at least 98 percent purity shall be used as the test substances. Either the hydrochloride or sulfate salt of *m*-pda shall be used as the test substances. Either the hydrochloride or sulfate salt of *m*-pda shall be used as a test substance in the oncogenicity test in paragraph (c)(2) of this section if the free base proves to be unstable under the conditions of this study. Either the hydrochloride or sulfate salt of *o*-pda, *p*-pda, or *m*-pda shall be used as a test substance in the 90-day subchronic neurotoxicity studies in paragraph (c)(3)(B) of this section if the free base proves to be unstable under the conditions of these studies. The salt(s) shall be of at least 98 percent purity.

(b) *Persons required to submit study plans, conduct tests, and submit data.* (1) All persons who manufacture (including import or by-product manufacture) or process *m*-pda or *m*-pda.H_2SO_4, or intend to manufacture or process *m*-pda or *m*-pda.H_2SO_4, after the effective date of this rule to the end of the reimbursement period shall submit letters of intent to test, submit study plans, conduct tests, and submit data, or submit exemption applications as specified in paragraphs (c), (d), and (e) of this section, subpart A of this part, and parts 790 and 792 of this chapter for single-phase rulemaking.

(2) All persons who manufacture (including import or by-product manufacture) or process *p*-pda, or *p*-pda.H_2SO_4, or intend to manufacture or process *p*-pda, or *p*-pda H_2SO_4, after the effective date of this rule to the end of the reimbursement period shall submit letters of intent to test, submit study plans, conduct tests, and submit data, or submit exemption applications as specified in paragraphs (c)(3), (d), and (e) of this section, subpart A of this part and parts 790 and 792 of this chapter for single-phase rulemaking.

(3) All persons who manufacture (including import or by-product manufacture) or process *o*-pda, or intend to manufacture or process *o*-pda after the effective date of this rule to the end of the reimbursement period shall submit letters of intent to test, submit study plans, conduct tests, and submit data, or submit exemption applications as specified in paragraphs (c)(3), (d), and (e) of this section, subpart A of this part, and parts 790 and 792 of this chapter for single-phase rulemaking.

(c) *Health effects testing*—(1) *Mutagenicity testing*—(i) *Required testing.* (A) The sex-linked recessive lethal (SLRL) assay shall be conducted, by injection, in *Drosophila melanogaster* with *m*-pda in accordance with § 798.5275 of this chapter.

(B) If the SLRL assay conducted pursuant to paragraph (c)(1)(i)(A) of this section is positive, either the mouse visible specific locus test (MVSL) or the mouse biochemical specific locus test (MBSL) shall be conducted for *m*-pda by gavage in accordance with §§ 798.5200 or 798.5195 of this chapter, if after public program review, EPA issues a FEDERAL REGISTER notice or sends a certified letter to the test sponsor(s) specifying that testing shall be initiated. The test sponsor shall notify

EPA of its choice in writing in its first interim report.

(C) The mouse bone marrow cytogenetics: micronucleus (MBMC) assay shall be conducted on *m*-pda in accordance with § 798.5395 of this chapter.

(D) If the MBMC assay conducted pursuant to paragraph (c)(1)(i)(C) of this section is positive, the dominant lethal assay (DL) in mice shall be conducted on *m*-pda pursuant to § 798.5450 of this chapter.

(E) If the DL conducted pursuant to paragraph (c)(1)(i)(D) of this section is positive, heritable translocation (HT) testing in the mouse on *m*-pda shall be conducted pursuant to § 798.5460 of this chapter, if after a public program review, EPA issues a FEDERAL REGISTER notice or sends a certified letter to the test sponsor(s) specifying that testing shall be initiated.

(ii) *Reporting requirements.* (A) The tests shall be completed and the final reports for the MBMC assay shall be submitted to the EPA no later than January 16, 1991. The final report for the SLRL in *Drosophila melanogaster* shall be submitted no later than April 15, 1991.

(B) If required, the DL test shall be completed and the final report shall be received by EPA no later than 24 months after the effective date of this final rule.

(C) If required, the MVSL or the MBSL shall be completed and the final report shall be received by EPA no later than 51 months after EPA issues a FEDERAL REGISTER Notice or sends a certified letter to the test sponsor(s) identified under paragraph (c)(1)(i)(B) of this section specifying that testing shall be initiated.

(D) If required, the HT test shall be completed and the final report shall be submitted to EPA not later than 36 months after the date on which EPA notifies the test sponsor under paragraph (c)(1)(i)(E) of this section to begin testing.

(E) Interim reports for the SLRL assay and MBMC are required at 6-month intervals beginning 6 months after the effective date of this section. If the DL is triggered, interim reports are required at 6 month intervals beginning with the date of initiation of the study.

(F) Interim reports for the HT and either the MBSL or MVSL are required at 6–month intervals beginning 6 months after the date of notification by EPA that testing shall be initiated, and ending when the final report is submitted.

(2) *Oncogenicity*—(i) *Required testing.* A 2-year dermal oncogenicity bioassay shall be conducted with *m*-pda if, after public program review, EPA issues a FEDERAL REGISTER notice specifying that the testing shall be initiated.

(ii) [Reserved]

(iii) *Reporting requirements.* (A) The final results and final report for the oncogenicity bioassay shall be submitted to EPA no later than 53 months after EPA issues a FEDERAL REGISTER notice or sends a certified letter to the test sponsor under paragraph (c)(2)(i) of this section specifying that the testing shall be initiated.

(B) Interim reports for the oncogenicity study are required at 6-month intervals beginning 6 months after the date of notification by EPA that testing shall be initiated and ending when the final report is submitted.

(3) *Neurotoxicity*—(i) *Required testing.* (A) Acute neurotoxicity testing in the neurotoxicity functional observational battery (FOB) in accordance with § 798.6050 of this chapter, and the motor activity test (MAT) in accordance with § 798.6200 of this chapter, shall be conducted for *o*-, *m*-, and *p*-pda. The test chemicals shall be administered in a single oral dose. Clinical observations shall be made at a minimum of 1, 4, 24, and 48 hours and at 7 days after dosing.

(B) If neurotoxic effects are observed at 24 hours, or longer, during the testing conducted pursuant to paragraph (c)(3)(i)(A) of this section, then 90-day subchronic neurotoxic FOB and MAT tests shall be conducted in accordance with §§ 798.6050 and 798.6200 of this chapter, respectively, for each isomer showing such effects. At the end of these tests, the animals shall be sacrificed and the nervous tissue preserved and examined as described in the neuropathology test standard, § 798.6400 of this chapter.

(ii) *Reporting requirements.* (A) The acute neurotoxicity tests shall be completed and the final report submitted

to EPA no later than September 15, 1990. If triggered, the final report of the subchronic neurotoxicity testing and the neuropathological examination shall be submitted to EPA on the following schedules. If one isomer is triggered, the reporting deadline is July 15, 1990. If two isomers are triggered, the reporting deadline is January 15, 1992. If three isomers are triggered, the reporting deadline is July 15, 1992.

(B) [Reserved]

(d) *Chemical fate testing*—(1) *Indirect photolysis testing*—(i) *Required testing.* Indirect photolysis studies shall be conducted with *p*-, *m*-, and *o*-pda to determine the half-life in water of each of the three unsubstituted pda's in accordance with § 795.70 of this chapter.

(ii) *Reporting requirements.* (A) The final report shall be submitted to EPA no later than 8 months after the effective date of the final rule.

(B) The final report shall include a calculation of the predicted environmental concentration (PEC), 100×PEC, and 1,000×PEC for each isomer. PEC shall be calculated by using results from the indirect photolysis studies and solving the following equations for the appropriate isomer: *o*-pda: PECo = 0.3629 + 1.0468 log t 1/2; *m*-pda: PECm = 0.6830 + 1.9702 log t 1/2; *p*-pda: PECp = 0.0085 + 0.0024 log t 1/2, where PEC is the predicted concentration in ppb and t 1/2 is the half-life for oxidation (i.e., indirect photolysis) expressed in minutes. PEC, 100×PEC, and 1,000×PEC shall be used in the decision logic described in paragraph (e) of this section.

(2) [Reserved]

(e) *Environmental effects testing*—(1) *Acute toxicity* testing—(i) *Required testing.* (A) Flow-through fish acute toxicity tests in the rainbow trout (*Salmo gairdneri*) shall be conducted with *o*-, *m*-, and *p*-pda in accordance with § 797.1400 of this chapter.

(B) Acute flow-through studies on the freshwater invertebrate *Gammarus* shall be conducted with *o*-, *m*-, and *p*-pda in accordance with § 795.120 of this chapter.

(C) If the concentration affecting 50 percent of the population (LC_{50} or EC_{50}) for any study conducted pursuant to paragraphs (e)(1)(i)(A) and (B) of this section is less than or equal to 100×PEC, less than or equal to 1 milligram/liter (mg/L), or less than or equal to 100 mg/L and shows indications of chronicity, chronic toxicity testing shall be conducted pursuant to paragraph (e)(2) of this section. Indications of chronicity shall be the following: for fish or aquatic invertebrates, the ratio of 24 hour/96 hour LC_{50s} is greater than or equal to 2; for gammarids, the ratio of 24 hour/48 hour EC_{50s} is greater than or equal to 2.

(ii) *Reporting requirements.* The final reports for acute toxicity testing shall be submitted as follows:

(A) Testing on the rainbow trout shall be completed and submitted to EPA 9 months after the effective date of the final rule for *o*-pda and *p*-pda. Testing for *m*-pda shall be completed and submitted by January 15, 1991.

(B) The acute toxicity testing in freshwater *Gammarus* shall be completed and submitted no later than January 15, 1991.

(2) *Chronic toxicity testing*—(i) *Required testing.* (A) A fish partial life-cycle flow-through test shall be conducted in the more sensitive fish species, either *Pimephales promelas* or *Salmo gairdneri*, with each isomer, *o*-, *m*-, and *p*-pda, demonstrating an LC_{50}, determined by testing of fish pursuant to paragraph (e)(1)(i)(A) of this section, equal to or less than 100×PEC; or less than 1 mg/L; or less than 100 mg/L with indications of chronicity. Chronicity indicators are defined in paragraph (e)(1)(i)(C) of this section. Testing shall be conducted in accordance with § 797.1600 of this chapter.

(B) An invertebrate life-cycle flow-through toxicity test shall be conducted in *Daphnia magna* for *o*- and *p*-pda in accordance with § 797.1330 of this chapter.

(ii) *Reporting requirements.* (A) The fish partial life-cycle flow-through test shall be completed and final results shall be submitted to EPA no later than December 1, 1992.

(B) The invertebrate life-cycle flow-through toxicity test shall be completed and the final report submitted to EPA no later than January 15, 1993.

(C) Progress reports shall be submitted at 6 month intervals after the effective date of the final rule.

(f) *Effective dates.* (1) The effective date of this final rule is January 16,

1990, except for paragraphs (c)(1)(i)(B), (c)(1)(ii)(A), (c)(1)(ii)(C), (c)(1)(ii)(F), (c)(3)(ii)(A), (e)(1)(ii), (e)(2)(ii)(A), and (e)(2)(ii)(B) of this section. The effective date for paragraphs (c)(1)(i)(B), (c)(1)(ii)(C), and (c)(1)(ii)(F) of this section is May 21, 1990. The effective date for paragraphs (c)(1)(ii)(A), (c)(3)(ii)(A), and (e)(1)(ii), of this section is May 21, 1991. The effective date for paragraph (e)(2)(ii)(A) is June 12, 1992. The effective date for paragraph (e)(2)(ii)(B) is May 28, 1993.

(2) The guidelines and other test methods cited in this rule are referenced as they exist on the effective date of the final rule.

[54 FR 49294, Nov. 30, 1989, as amended at 55 FR 12644, Apr. 5, 1990; 56 FR 23231, May 21, 1991; 57 FR 24961, June 12, 1992; 58 FR 30992, May 28, 1993; 58 FR 34205, June 23, 1993]

§ 799.4360 Tributyl phosphate.

(a) *Identification of test substance.* (1) Tributyl phosphate (TBP, CAS No. 126–73–8) shall be tested in accordance with this section.

(2) TBP of at least 99 percent purity shall be used as the test substance.

(b) *Persons required to submit study plans, conduct tests, and submit data.* All persons who manufacture (including import and byproduct manufacture) or process or intend to manufacture or process TBP, other than as an impurity, from the effective date of the final rule to the end of the reimbursement period shall submit letters of intent to conduct testing, submit study plans, conduct tests, and submit data, or submit exemption applications as specified in this section, subpart A of this part, and part 790 of this chapter for single-phase rulemaking.

(c) *Health effects testing*—(1) *Neurotoxicity*—(i) *Required testing.* (A)(*1*) An acute and subchronic functional observational battery shall be conducted with TBP in accordance with § 798.6050 of this chapter except for the provisions of paragraphs (d) (5) and (6) of § 798.6050.

(*2*) For the purpose of this section, the following provisions also apply:

(*i*) *Animal selection.* Testing shall be performed in laboratory rats.

(*ii*) *Duration of testing.* For the acute testing, the substance shall be administered over a period not to exceed 24 hours; for the subchronic testing, test species shall be exposed daily for at least 90 days.

(*iii*) *Route of exposure.* Animals shall be exposed to TBP orally.

(B)(*1*) An acute and subchronic motor activity test shall be conducted with TBP in accordance with § 798.6200 of this chapter except for the provisions of paragraphs (d) (5) and (6) of § 798.6200.

(*2*) For the purpose of this section, the following provisions also apply:

(*i*) *Animal selection.* Testing shall be performed in laboratory rats.

(*ii*) *Duration of testing.* For the acute testing, the substance shall be administered over a period not to exceed 24 hours; for the subchronic testing, test species shall be exposed daily for at least 90 days.

(*iii*) *Route of administration.* Animals shall be exposed to TBP orally.

(C)(*1*) A neuropathology test shall be conducted with TBP in accordance with § 798.6400 of this chapter except for the provision of paragraphs (d)(1)(i) (5) and (6) of § 798.6400.

(*2*) For the purpose of this section, the following provisions also apply:

(*i*) *Animal selection.* Testing shall be performed in laboratory rats.

(*ii*) *Duration of testing.* Animals shall be exposed for at least a 90-day period.

(*iii*) *Route of administration.* Animals shall be exposed to TBP orally.

(ii) *Reporting requirements*—(A) The neurotoxicity tests required under paragraph (c)(1)(i) (A), (B), and (C) of this section shall be completed and final reports submitted to EPA within 18 months of the effective date of the final rule.

(B) An interim progress report for these neurotoxicity tests shall be submitted to EPA 6 months after the effective date of the final rule.

(2) *Developmental toxicity*—(i) *Required testing.* (A) A developmental toxicity study shall be conducted with TBP in accordance with § 798.4900 of this chapter, except for the provisions of paragraph (e)(5) of § 798.4900.

(B) for the purpose of this section, the following provision also applies:

(*1*) *Route of administration.* The animals shall be exposed to TBP by gavage.

(*2*) [*Reserved*]

(ii) *Reporting requirements.* (A) The developmental toxicity study required under paragraph (c)(2) of this section shall be completed and a final report submitted to EPA by January 27, 1991.

(B) An interim progress report shall be submitted to EPA 6 months after the effective date of the final rule.

(3) *Reproductive and fertility*—(i) *Required testing.* (A) A reproduction and fertility study shall be conducted with TBP in accordance with § 798.4700 of this chapter, except for the provisions of paragraph (c)(5)(i)(A) of § 798.4700.

(B) for the purpose of this section, the following provisions also apply:

(*1*) *Route of administration.* Animals should be exposed to TBP by gavage.

(*2*) [*Reserved*]

(ii) *Reporting requirements.* (A) The reproduction and fertility effects study required under paragraph (c)(3) of this section shall be completed and a final report submitted to EPA by August 17, 1992.

(B) Interim program reports shall be submitted to EPA at 6 month intervals, beginning 6 months after the effective date of the final rule, until the final report is submitted to EPA.

(4) *Mutagenic effects—Gene mutation*—(i) *Required testing.* (A) A detection of gene mutation in somatic cells in culture test shall be conducted with TBP in accordance with § 798.5300 of this chapter.

(B)(*1*) If TBP produces a positive result in the assay conducted pursuant to paragraph (c)(4)(i)(A) of this section, a sex-linked recessive lethal test in *Drosophila melanogaster* shall be conducted with TBP in accordance with § 798.5275 of this chapter, except for the provisions of paragraph (d)(5)(iii) of § 798.5275.

(*2*) For the purpose of this section, the following provisions also apply:

(*i*) *Route of administration.* Animals shall be exposed to TBP orally.

(*ii*) [Reserved]

(*iii*) *Reporting requirements.* (*A*) The somatic cells in culture assay shall be completed and the final report submitted to EPA, within 10 months after the effective date of the final rule. If required, the *Drosophila* sex-linked recessive lethal assay shall be completed and the final report submitted to EPA within 22 months after the effective date of the final rule.

(*B*) Interim progress reports shall be submitted to EPA at 6 month intervals beginning 6 months after initiation of the sex-linked recessive lethal test in *Drosophila* until the applicable final reports are submitted to EPA.

(5) *Mutagenic effects—Chromosomal aberration*—(i) *Required testing.* (A) An in vitro mammalian cytogenetics test shall be conducted with TBP in accordance with § 798.5375 of this chapter.

(B)(*1*) If TBP produces a negative result in the in vitro cytogenetics test conducted pursuant to paragraph (c)(5)(i)(A) of this section, an in vivo mammalian bone marrow cytogenetics test shall be conducted with TBP in accordance with § 798.5385 of this chapter, except for the provisions of paragraph (d)(5)(iii) of § 798.5385.

(*2*) For the purpose of this section, the following provisions also apply:

(*i*) *Route of administration.* Animals shall be exposed to TBP orally.

(*ii*) [*Reserved*]

(C)(*1*) If TBP produces a positive result in either the in vitro or the in vivo cytogenetics test conducted pursuant to paragraphs (c)(5)(i) (A) and (B) of this section, a rodent dominant-lethal assay shall be conducted with TBP in accordance with § 798.5450 of this chapter, except for the provisions of paragraph (d)(5)(iii) of § 798.5450.

(*2*) For the purpose of this section, the following provisions also apply:

(*i*) *Route of administration.* Animals shall be exposed orally to TBP.

(*ii*) [*Reserved*]

(D)(*1*) A rodent heritable trans- location assay shall be conducted with TBP if the dominant-lethal assay conducted for TBP pursuant to paragraph (c)(5)(i)(C) of this section produces a positive result, and if, after a public program review, EPA issues a FEDERAL REGISTER notice or sends a certified letter to the test sponsor specifying that the testing shall be initiated. This test shall be conducted in accordance with § 798.5460 of this chapter except for the provisions of paragraph (d)(5)(iii) of § 798.5460.

(*2*) For the purpose of this section, the following provisions also apply:

(*i*) *Route of administration.* Animals shall be exposed to TBP orally.

(*ii*) [*Reserved*]

(ii) *Reporting requirements.* (A)(*1*) The in vitro mammalian cytogenetics test shall be completed and the final report submitted to EPA within 10 months after the effective date of the final rule.

(*2*) If required, the in vivo mammalian bone-marrow cytogenetics test shall be completed and the final report submitted to EPA within 24 months after the effective date of the final rule.

(*3*) If required, the dominant lethal assay shall be completed and the final report submitted to EPA within 36 months after the effective date of the final rule.

(*4*) If required, the heritable translocation assay shall be completed and the final report submitted to EPA within 25 months after the date of EPA's notification of the test sponsor under paragraph (c)(5)(i)(D) of this section that testing shall be initiated.

(B) Interim progress reports shall be submitted to EPA at 6 month intervals beginning 6 months after initiation of the rodent dominant lethal assay and the rodent heritable translocation assay respectively, if required, until the applicable final reports are submitted to EPA.

(6) *Oncogenicity*—(i) *Required testing.* (A) An oncogenicity test shall be conducted with TBP in accordance with § 798.3300 of this chapter except for the provisions of paragraphs (b)(1)(i), (b)(6)(i) and (b)(9), of § 798.3300.

(B) For the purpose of this section, the following provisions also apply:

(*1*) *Animal selection.* TBP shall be tested in Sprague-Dawley rats and in mice.

(*2*) *Route of administration.* Animals shall be exposed to TBP orally.

(*3*) *Clinical examinations.* At 12 months, 18 months and during month 24, a blood smear shall be obtained from all animals. A differential blood count shall be performed on blood smears from those animals in the highest dosage group and the controls. If these data, or data from the pathological examination indicate a need, then the 12– and 18–month blood smears from other dose levels shall also be examined. Differential blood counts shall be performed for the next lower group(s) if there is a major discrepancy between the highest group and the controls. If clinical observations suggest a deterioration in health of the animals during the study, a differential blood count of the affected animals shall be performed.

(ii) *Reporting requirements.* (A) The oncogenicity test required under paragraph (c)(6) of this section shall be completed and a final report submitted to EPA within 53 months of the effective date of the final rule.

(B) Interim progress reports shall be submitted to EPA at 6 month intervals beginning 6 months after the effective date of the final rule, until the final report is submitted to EPA.

(7) *Dermal sensitization*—(i) *Required testing.* A dermal sensitization test shall be conducted with TBP in accordance with § 798.4100 for this chapter.

(ii) *Reporting requirements.* The dermal sensitization test shall be completed and the final report submitted to EPA within 6 months of the effective date of the final rule.

(8) *Oral/Dermal Pharmacokinetics*—(i) *Required testing.* (A) A pharmaco- kinetics test shall be conducted with TBP in accordance with § 795.228 of this chapter, except for the provisions of paragraphs (c)(1)(iii)(B), (c)(2)(ii)(C)(*1*) and (c)(2)(ii)(C)(*2*) of § 795.228.

(B) For the purposes of this section, the following provisions also apply:

(*1*) *Animal care.* During the acclimatization period, the animals shall be housed in suitable cages. All animals shall be provided with certified feed and tap water *ad libitum.*

(*2*) *Dermal treatment.* For dermal treatment, two doses, comparable to the low and high oral doses, shall be dissolved in a suitable vehicle and applied in volumes adequate to deliver comparable doses. The backs of the animals should be lightly clipped with an electric clipper 24 hours before treatment. The test substance shall be applied to the intact clipped skin (approximately 2 cm^2 for rats, 40 cm^2 for mini-pigs). The dosed areas shall be protected with a suitable porous covering which is secured in place, and the animals shall be housed separately.

(ii) *Reporting requirements.* (A) The pharmacokinetics test required in paragraph (c)(8)(i) of this section shall

be completed and the final report submitted to EPA by December 26, 1992.

(B) Interim 6 month progress reports shall be submitted to EPA beginning at 6 months after the effective date of the final rule and continuing until submission of the final report.

(d) *Environmental effects testing*—(1) *Algal acute toxicity*—(i) *Required testing.* (A) Algal acute toxicity testing shall be conducted with TBP using *Selenastrum capricornutum* in accordance with § 797.1050 of this chapter except for the provisions of paragraphs (c)(6)(i)(A),(B), and (ii) of § 797.1050.

(B) For the purpose of this section, the following provisions also apply:

(*1*) *Summary of the test.* The algal cells at the end of 24, 48, and 72 hours shall be enumerated.

(*2*) *Chemical measurement.* The final separation of the algal cells from the test solution shall be done using an ultrafiltration (e.g., 0.45 micrometer pore size) technique. The total and dissolved (e.g., filtered) concentrations of the test substance shall be measured in each test chamber and the delivery chamber before the test and in each test chamber at 0 and 96 hours.

(ii) *Reporting requirements.* The algal acute toxicity test required in paragraph (d)(1) of this section shall be completed and the final report submitted to EPA within 9 months of effective date of the final rule.

(2) *Fish acute toxicity*—(i) *Required testing.* (A) Fish acute toxicity testing shall be conducted with TBP using *Salmo gairdneri* (rainbow trout) in accordance with § 797.1400 of this chapter.

(B) For the purpose of this section, the following provisions also apply:

(*1*) *Chemical measurement.* The total and dissolved (e.g., filtered) concentrations of the test substance shall be measured in each test chamber delivery chamber before the test. If the dissolved test substance concentration is greater than 80 percent of total test substance concentration, then only total or dissolved test concentration shall be measured in each chamber at 0, 48, and 96 hours. If the dissolved test substance concentration is less than or equal to 80 percent of total test substance, then total and dissolved test substance concentration shall be measured at 0, 48 and 96 hours.

(*2*) *Test procedures.* The test shall be performed under flow-through conditions.

(ii) *Reporting requirements.* The fish acute toxicity test shall be completed and the final report submitted to EPA within 9 months of the effective date of the final rule.

(3) *Daphnid acute toxicity*—(i) *Required testing.* (A) Daphnid acute toxicity testing shall be conducted with TBP using *Daphnia magna* or *D. pulex* in accordance with § 797.1300 of this chapter.

(B) For the purpose of this section, the following provisions also apply:

(*1*) *Chemical measurement.* The total and dissolved (e.g., filtered) concentrations of the test substance shall be measured in each test chamber and the delivery chamber before the test. If the dissolved test substance concentration is greater than 80 percent of total test substance concentration, then only total or dissolved test concentration shall be measured in each chamber at 0, 24, and 48 hours. If the dissolved test substance concentration is less than or equal to 80 percent of total test substance, then total and dissolved test substance concentration shall be measured at 0, 29, and 48 hours.

(*2*) *Test procedures.* The test shall be performed under flow-through conditions.

(ii) *Reporting requirements.* The daphnid acute toxicity test shall be completed and the final report submitted to EPA within 9 months of the effective date of the final rule.

(4) *Gammarid acute toxicity*—(i) *Required testing.* (A) *Gammarid* acute toxicity testing shall be conducted with TBP using *Gammarus lacustris, G. fasciatus,* or *G. pseudolimnaeus* in accordance with § 795.120 of this chapter.

(B) For the purpose of this section, the following provisons also apply:

(*1*) *Chemical measurement.* The total and dissolved (e.g., filtered) concentrations of the test substance shall be measured in each test chamber and the delivery chamber before the test. If the dissolved test substance concentration is greater than 80 percent of total test substance concentration, then only total or dissolved test concentration shall be measured in each chamber at 0, 48, and 96 hours. If the dissolved test substance concentration is less than or

equal to 80 percent of total test substance, then total and dissolved test substance concentration shall be measured at 0, 48, and 96 hours.

(*2*) *Test procedures.* The test shall be performed under flow-through conditions.

(ii) *Reporting requirements.* The *Gammarid* acute toxicity test shall be completed and the final report submitted to EPA within 9 months of the effective date of the final rule.

(5) *Daphnid chronic toxicity*—(i) *Required testing.* (A) Daphnid chronic toxicity testing shall be conducted with TBP using *Daphnia magna* or *D. pulex* in accordance with §797.1330 of this chapter, if the algal EC50, the rainbow trout LC50, the daphnid EC50, or the gammarid LC50 determined in accordance with paragraphs (d)(1), (2), (3) and (4) of this section satisfy the following criteria: Any such value is ≦ 1 mg/L; or any fish or aquatic invertebrate EC50 or LC50 is ≦ 100 mg/L and either the rainbow trout or gammarid 24-hour to 96-hour LC50 ratio ≧ 2, or the daphnid 24-hour to 48-hour EC50 or LC50 ratio is ≧ 2.

(B) For the purpose of this section, the following provisions also apply:

(*1*) *Chemical measurement.* The total and dissolved (e.g., filtered) concentrations of the test substance shall be measured in each test chamber and the delivery chamber before the test. If the dissolved test substance concentration is greater than 80 percent of total test substance concentration, then only total or dissolved test substance concentration shall be measured in each test chamber at 0, 7, 14, and 21 days. If the dissolved test substance concentration is less than or equal to 80 percent of total test substance concentration, then total and dissovled test substance concentration shall be measured at 0, 7, 14, and 21 days.

(*2*) *Test procedures.* The test shall be performed under flow-through conditions.

(ii) *Reporting requirements.* (A) The daphnid chronic toxicity test, if required, shall be completed and the final report submitted to EPA by September 27, 1991.

(B) An interim progress report shall be submitted to EPA 6 months after the initiation of the test.

(6) *Fish early-life stage toxicity*—(i) *Required testing.* A fish early-life stage toxicity test shall be conducted with TBP in accordance with §797.1600 of this chapter, using the fish with the lower LC50 value (either the rainbow trout (*Salmo gairdneri*) or the fathead minnow (*Pimephales promelas*)), if the algal EC50, the rainbow trout LC50, the gammarid LC50 or the daphnid EC50 determined in accordance with paragraphs (d)(1), (2), (3), and (4) of this section satisfy the following criteria: Any such value is ≦ 1 mg/L; or any fish or aquatic invertebrate EC50 or LC50 is ≦ 100 mg/L and either the rainbow trout or gammarid 24 hour to 96 hour LC50 ratio ≧ 2, or the daphnid 24-hour to 48-hour EC50 or LC50 ratio is ≧ 2.

(ii) *Reporting requirements.* (A) The fish early-life stage flow-through toxicity test shall be completed and the final report submitted to EPA by December 27, 1991.

(B) An interim progress report shall be submitted to EPA 6 months after the initiation of the test.

(7) *Benthic sediment invertebrate bioassay*—(i) *Required testing.* (A) A benthic sediment invertebrate bioassay shall be conducted on TBP with the midge (*Chironomus tentans*) if chronic toxicity testing is required pursuant to paragraph (d)(5) of this section and if the log Koc calculated according to paragraph (e)(2)(B)(*1*) of this section is greater than or equal to 3.5 but less than or equal to 6.5. The total aqueous sediment concentrations and interstitial water concentrations of the test substance shall be measured in each test chamber at 0, 4, 7, 10, and 14 days. The aqueous concentrations of the test substance in the delivery chamber shall be measured at 0, 4, 7, 10, and 14 days. TBP-spiked clean freshwater sediments containing low, medium, and high organic carbon content shall be used.

(B) The benthic sediment invertebrate bioassay shall be conducted according to the test procedure specified in the American Society for Testing and Materials, Special Technical Publication 854 (ASTM STP 854) entitled, ''Aquatic Safety Assessment of Chemicals Sorbed to Sediments,'' by W.J. Adams, R.A. Kimerle, and R.G. Mosher,

published in *Aquatic Toxicity and Hazard Assessment: Seventh Symposium,* ASTM STP 854, pp. 429–453, R.D. Caldwell, R. Purdy, and R.C. Bahner, Eds., 1985 which is incorporated by reference. This published procedure is available for public inspection at the Office of Federal Register, 800 North Capitol Street, NW., suite 700, Washington, DC 20408, and copies may be obtained from the Non-Confidential Information Center (NCIC) (7407), Office of Pollution Prevention and Toxics, U.S. Environmental Protection Agency, Room B–607 NEM, 401 M St., SW., Washington, DC 20460, between the hours of 12 p.m. and 4 p.m. weekdays excluding legal holidays.This incorporation by reference was approved by the Director of the Federal Register in accordance with 5 U.S.C. 522(a) and 1 CFR part 51. The method is incorporated as it exists on the effective date of this rule and a notice of any change to the method will be published in the FEDERAL REGISTER.

(ii) *Reporting requirements.* (A) The benthic sediment invertebrate bioassay, if required, shall be completed and the final report submitted to EPA within 21 months of the effective date of the final rule.

(B) An interim progress report shall be submitted to EPA for the benthic sediment invertebrate bioassy 6 months after the initiation of the test.

(e) *Chemical fate testing*—(1) *Vapor pressure*—(i) *Required testing.* Vapor pressure testing shall be conducted with TBP in accordance with § 796.1950 of this chapter.

(ii) *Reporting requirements.* The vapor pressure test required in paragraph (d)(1) of this section shall be completed and the final report submitted to EPA by September 27, 1990.

(2) *Sediment and soil adsorption isotherm*—(i) *Required testing.* Sediment and soil absorption isotherm testing shall be conducted with TBP in accordance with § 796.2750 of this chapter and EPA will provide two soil and two sediment samples.

(ii) *Reporting requirements.* (A) The sediment and soil absorption isotherm test required under paragraph (d)(2) of this section shall be completed and the final report submitted to EPA by September 27, 1990.

(B) For the purpose of this section, the following provisions also apply:

(*1*) A Koc value shall be calculated for each test sediment using the equation Koc=K/ (percent of organic carbon in test sediment).

(*2*) [*Reserved*]

(3) *Hydrolysis as a function of pH at 25 °C*—(i) *Required testing.* Hydrolysis testing shall be completed with TBP in accordance with § 796.3500 of this chapter.

(ii) *Reporting requirements.* The hydrolysis test required under paragraph (e)(3)(i) of this section shall be completed and the final report submitted to EPA by September 27, 1990.

(f) *Effective date.* (1) The effective date of this final rule is September 27, 1989, except for paragraphs (c)(2)(ii)(A), (c)(3)(ii)(A), (c)(6)(i)(A), (c)(6)(i)(B)(*3*), (c)(8)(i), (c)(8)(ii)(A), (d)(5)(ii)(A), (d)(6)(ii)(A), (e)(1)(ii), (e)(2)(ii)(A), and (e)(3)(ii) of this section. The effective date for paragraphs (c)(2)(ii)(A), (c)(3)(ii)(A), (c)(8)(i), (e)(1)(ii), (e)(2)(ii)(A), and (e)(3)(ii) of this section is May 21, 1991. The effective date for (c)(8)(ii)(A), (d)(5)(ii)(A), and (d)(6)(ii)(A) of this section is June 12, 1992. The effective date for (c)(6)(i)(A), (c)(6)(i)(B)(*3*), and (c)(8)(ii)(A) is May 28, 1993.

(2) The guidelines and other test methods cited in this rule are referenced as they exist on the effective date of the final rule.

[54 FR 33413, Aug. 14, 1989; 56 FR 23231, May 21, 1991, as amended at 57 FR 24961, June 12, 1992; 58 FR 30992, May 28, 1993; 58 FR 34205, June 23, 1993; 60 FR 34467, July 3, 1995]

§ 799.4440 Triethylene glycol monomethyl ether.

(a) *Identification of test substance.* (1) Triethylene glycol monomethyl ether (TGME, CAS No. 112–35–6) shall be tested in accordance with this section.

(2) TGME of at least 90 percent purity shall be used as the test substance.

(b) *Persons required to submit study plans, conduct tests, and submit data.* All persons who manufacture or process TGME, other than as an impurity,

after May 17, 1989, to the end of the reimbursement period shall submit letters of intent to conduct testing, submit study plans, conduct tests and submit data, or submit exemption applications as specified in this section, subpart A of this part, and parts 790 and 792 of this chapter for single-phase rulemaking.

(c) *Developmental neurotoxicity*—(1) *Required testing.* Developmental neurotoxicity testing shall be performed in the Sprague-Dawley rat by gavage in accordance with § 795.250 of this chapter except for the provision in paragraph (c)(3)(iii) of § 795.250.

(2) For the purpose of this section, the following provisions also apply:

(i) *Number of animals.* The objective is for a sufficient number of pregnant rats to be exposed to ensure that an adequate number of offspring are produced for neurotoxicity evaluation. At least 24 litters are recommended at each dose level.

(ii) *Dose levels and dose selection.* In the absence of developmental toxicity or maternal toxicity the maximum dose shall be 5 grams/kilogram.

(3) *Reporting requirements*—(i) The developmental neurotoxicity test shall be completed and the final report submitted to EPA within 21 months of the initiation of the test.

(ii) Progress reports shall be submitted to EPA at 6- month intervals, beginning six months after the initiation of the test.

(d) *Effective date.* (1) The effective date of this final rule is May 17, 1989, except for paragraph (c)(2)(i) and (c)(3)(i) of this section. The effective date for paragraph (c)(2)(ii) and (c)(3)(i) of this section is May 21, 1991.

(2) The guidelines and other test methods cited in this rule are referenced as they exist on the effective date of the final rule.

[54 FR 13477, Apr. 3, 1989; 56 FR 23232, May 21, 1991, as amended at 58 FR 34205, June 23, 1993]

Subpart C—Testing Consent Orders

§ 799.5000 Testing consent orders for substances and mixtures with Chemical Abstract Service Registry Numbers.

This section sets forth a list of substances and mixtures which are the subject of testing consent orders adopted under 40 CFR part 790. Listed below in Chemical Abstract Service (CAS) Registry Number order are the substances and mixtures which are the subject of these orders and the FEDERAL REGISTER citations providing public notice of such orders.

CAS Number	Substance or mixture name	Testing	FR Publication Date
67–64–1	Acetone	Health effects	January 23, 1995.
71–55–6	1,1,1-Trichloroethane	Health effects	August 23, 1989.
78–83–1	Isobutyl alcohol	Health effects	January 23, 1995.
79–10–7	Acrylic Acid	Health effects	March 4, 1992.
84–74–2	Di-*n*-butyl phthalate	Environmental effects	January 9, 1989.
84–75–3	Di-*n*-hexyl phthalate	Environmental effects	January 9, 1989.
		Chemical fate	January 9, 1989.
100–40–3	4-Vinylcyclohexene	Health effects	September 23, 1991.
		Chemical fate	September 23, 1991.
106–91–2	Glycidyl methacrylate	Health effects	January 26, 1995.
108–10–1	Methyl isobutyl ketone	Health effects	January 23, 1995.
109–99–9	Tetrahydrofuran	Health effects	January 23, 1995.
110–82–7	Cyclohexane	Health Effects and Environmental Releases Report.	November 18, 1994.
112–35–6	Triethylene glycol monomethyl ether	Health effects	April 3, 1989.
112–50–5	Triethylene glycol monoethyl ether	Health effects	April 3, 1989.
117–81–7	Di-2-ethylhexyl phthalate	Chemical fate	January 9, 1989.
119–06–2	Ditridecyl phthalate	Chemical fate	January 9, 1989.
123–86–4	*N*-butyl acetate	Health effects	January 23, 1995.
131–11–3	Dimethly phthalate	Environmental effects	January 9, 1989.

CAS Number	Substance or mixture name	Testing	FR Publication Date
141–78–6	Ethyl acetate	Health effects	January 23, 1995.
141–79–7	Mesityl oxide	Health effects	September 5, 1991.
143–22–6	Triethylene glycol monobutyl ether	Health effects	January 9, 1989.
143–33–9	Sodium cyanide	Chemical fate	December 17, 1991.
		Terrestrial effects	December 17, 1991.
556–67–2	Octamethylcyclo-tetrasiloxane	Chemical fate	January 10, 1989.
		Environmental effects	January 10, 1989.
628–63–7	*N*-amyl acetate	Health effects	January 23, 1995.
872–50–4	*N*- methylpyrrolidone	Health effects	November 23, 1993.
994–05–8	Tertiary-amyl methyl ether	Health effects	March 21, 1995.
1634–04–4	Methyl tert-butyl ether	Health effects	March 31, 1988.
2461–18–9	Lauryl glycidyl ether[1]	Health effects	June 11, 1996.
3618–72–2	C.I. Disperse Blue 79:1 Acetamide,*N*-[5-[bis[2-(acetyloxy) ethyl]amino]-2-[(2-bromo-4, 6-dinitrophenyl) azo]-4-methoxyphenyl]-.	Health effects	November 21, 1989.
		Environmental effects	November 21, 1989.
3648–20–2	Diundecyl phthalate	Environmental effects	January 9, 1989.
4170–30–3	Crotonaldehyde	Environmental effects	November 9, 1989.
		Chemical fate	November 9, 1989.
4675–54–3	Bisphenol A diglycidyl ether	Health effects	August 1, 1994.
		Exposure evaluation	
15965–99–8	Hexadecyl glycidyl ether[1]	Health effects	June 11, 1996.
16245–97–9	*n*-Octadecyl glycidyl ether[1]	Health effects	June 11, 1996.
26761–40–0	Diisodecyl phthalate	Chemical fate	January 9, 1989.
38954–75–5	Tetradecyl glycidyl ether[1]	Health effects	June 11, 1996.
68081–84–5	Alkyl (C_{10}-C_{16}) glycidyl ether[1]	Health effects	June 11, 1996.
68515–47–9	Ditridecyl phthalate (mixed isomers)	Chemical fate	January 9, 1989.
68515–49–1	Diisodecyl phthalate (mixed isomers)	Chemical fate	January 9, 1989.
68515–50–4	Dihexyl phthalate (mixed isomers)	Environmental effects	January 9, 1989.
		Chemical fate	January 9, 1989.
68609–97–2	Alkyl (C_{12}-C_{14}) glycidyl ether[1]	Health effects	June 11, 1996.
84852–15–3*	4-Nonylphenol, branched	Environmental effects	February 21, 1990.
		Chemical fate	February 21, 1990.
120547-52-6	Alkyl (C_{12}-C_{13}) glycidyl ether	Health effects	March 22, 1996.
142844–00–6	Refractory ceramic fibers	Exposure monitoring	May 14, 1993.

[1] As represented by alkyl (C_{12}-C_{13}) glycidyl ether (CAS No. 120547–52–6)

[57 FR 18829, May 1, 1992, as amended at 57 FR 24961, June 12, 1992; 58 FR 28520, May 14, 1993; 58 FR 34205, June 23, 1993; 58 FR 61816, Nov. 23, 1993; 59 FR 38920, Aug. 1, 1994; 59 FR 59663, Nov. 18, 1994; 60 FR 4519, Jan. 23, 1995; 60 FR 5140, Jan. 26, 1995; 60 FR 14911, Mar. 21, 1995; 60 FR 31924, June 19, 1995; 61 FR 11742, Mar. 22, 1996; 61 FR 29487, June 11, 1996]

§ 799.5025 Testing consent orders for mixtures without Chemical Abstracts Service Registry Numbers.

This section sets forth a list of mixtures (with no Chemical Abstracts Service Registry Numbers) which are the subject of testing consent orders adopted under 40 CFR part 790. Listed below are the mixtures which are the subject of these orders and the FEDERAL REGISTER citations providing public notice of such orders.

Mixture/substance (CAS No.)	Required test	FR citation
Di(heptyl, nonyl, undecyl) phthalate (D711P) as a mixture of the following six substances:		
(1) diheptyl phthalate (branched and linear isomers), CAS No. 68515–44–6	Environmental effects.	January 9, 1989.

Mixture/substance (CAS No.)	Required test	FR citation
(2) dinonyl phthalate (branched and linear isomers), CAS No. 68515–45–7	.....do	Do.
(3) di(heptyl, nonyl) phthalate (branched and linear isomers), CAS No. 111381–89–6	.....do	Do.
(4) diundecyl phthalate (branched and linear isomers), CAS No. 3648–20–2	.....do	Do.
(5) di(heptyl, undecyl) phthalate (branched and linear isomers), CAS No., 111381–90–9	.....do	Do.
(6) di(nonyl, undecyl) phthalate (branched and linear isomers), CAS No. 111381–91–0)	.....do	Do.

[55 FR 3059, Jan. 30, 1990]

Subpart D—Multichemical Test Rules

§ 799.5055 Hazardous waste constituents subject to testing.

(a) *Identification of test substances.* (1) The table in paragraph (c) of this section identifies those chemical substances that shall be tested in accordance with this section.

(2) Substances of at least 98-percent purity shall be used as the test substances.

(b) *Persons required to submit study plans, conduct tests, and submit data.* All persons who manufacuture (including import or manufacture as a byproduct) or process or intend to manufacture or process one or more of the substances in paragraph (c) of this section, other than as an impurity, after July 29, 1988, to the end of the reimbursement period shall submit letters of intent to conduct testing, submit study plans, conduct tests, and submit data, or submit exemption applications for those substances they manufacture or process, or intend to manufacture or process, as specified in this section, subpart A of this part, and parts 790 and 792 of this chapter for single-phase rulemaking.

(c) *Designation of testing.* The substances identified in the following table by name and CAS number shall be tested in accordance with the designated requirements under paragraphs (d) and (e) of this section. The paragraph numbers listed for a substance refer to the specific testing and reporting requirements specified in paragraphs (d) and (e) of this section.

Chemical name	CAS No.	Required testing under paragraphs (d) and (e) of this section
Acetamide, 2-fluoro	640–19–7	(e)(1)
Bis(2-chloroethoxy)methane.	111–91–1	(d)(2), (e)(1)
Bis(2-chloroisopropyl)ether.	108–60–1	(d)(2)
4-Bromobenzyl cyanide ...	16532–79–9	(d)(1), (2), (e)(1)
Bromoform	75–25–2	(d)(2)
4-Chlorobenzo-trichloride	5216–25–1	(e)(1)
2,4–D	94–75–7	(d)(2)
Dibromomethane 74–95–3 (d)(2).		
1,2-Dichlorobenzene	95–50–1	(d)(2)
1,1-Dichloroethane	75–34–3	(d)(2)
1,3-Dichloropropanol	96–23–1	(d)(1), (e)(1)
Dihydrosafrole	94–58–6	(d)(2)
Endrin	72–20–8	(d)(2)
Ethyl methacrylate	97–63–2	(d)(2)
Maleic hydrazide	123–33–1	(d)(1), (2)
Malononitrile	109–77–3	(d)(1), (e)(1)
Methanethiol	74–93–1	(d)(1)
Methyl chloride	74–87–3	(d)(2)
p- Nitrophenol	100–02–7	(e)(1)
Pentachlorobenzene	608–93–5	(d)(2)
Pentachloroethane	76–01–7	(d)(2)
1,2,4,5-Tetrachlorobenzene.	95–94–3	(d)(2)
Trichloromethanethiol	75–70–7	(d)(1), (2), (e)(1)

(d) *Chemical fate testing*—(1) *Soil adsorption*—(i) *Required testing.* A soil adsorption isotherm test shall be conducted with the substances designated in paragraph (c) of this section in accordance with § 796.2750 of this chapter except that the provisions of § 796.2750 (b)(1)(vii)(A) shall not apply to 1,3-Dichloropropanol.

(ii) *Reporting requirements.* The sediment and soil adsorption isotherm tests shall be completed and the final results submitted to EPA within 9 months of the effective date of the final rule except that final results for testing of 1,3-Dichloropropanol and Methanethiol shall be completed and submitted to EPA within 11 months

and 15 months, respectively, of the effective date of the final rule.

(2) *Hydrolysis*—(i) *Required testing.* A test of hydrolysis as a function of pH at 25 °C shall be conducted with the substances designated in paragraph (c) of this section in accordance with § 796.3500 of this chapter.

(ii) *Reporting requirements.* The hydrolysis tests with the substances designated in paragraph (c) of this section shall be completed and the final results submitted to EPA within 6 months of the effective date of the final rule except that hydrolysis tests for Dibromomethane, Dihydrosafrole, Ethyl methacrylate, and Methyl chloride shall be completed and the final results submitted to EPA within 12 months of the effective date of the final rule; and hydrolysis tests for 1,2-Dichlorobenzene and 1,2,4,5-Tetrachlorobenzene shall be completed and final results submitted to EPA within 9 months of the effective date of the final rule.

(e) *Health effects testing*—(1) *Subchronic toxicity*—(i) *Required test.* (A) An oral gavage subchronic toxicity test shall be conducted in the rat with the substances designated in paragraph (c) of this section except for bis(2-chloroethoxy) methane (CAS No. 111–91–1) in accordance with § 798.2650 of this chapter.

(B) For Bis(2-chloroethoxy)methane, an oral gavage subchronic toxicity test shall be conducted in the rat in accordance with § 798.2650 of this chapter except for the provisions in paragraphs (e)(9)(i)(A) and (e)(9)(i)(B). For Bis(2-chloroethoxy)methane, the following provisions also apply:

(*1*) Hematology determinations shall be carried out at least two times during the test period: Just after dosing on day 30 and just prior to terminal sacrifice. Hematology determinations which are appropriate to all studies are: Hematocrit, hemoglobin concentration, erythrocyte count, total and differential leukocyte count, and a measure of clotting potential such as clotting time, prothrombin time, thromboplastin time, or platelet count.

(*2*) Certain clinical biochemistry determinations on blood shall be carried out at least two times: Just after dosing on day 30 and just prior to terminal sacrifice. Test areas which are considered appropriate to all studies are: Electrolyte balance, carbohydrate metabolism, and liver and kidney function. The selection of specific tests will be influenced by observations on the mode of action of the substance. Suggested determinations are: Calcium, phosphorus, chloride, sodium, potassium, fasting glucose (with the period of fasting appropriate to the species), serum glutamic oxaloacetic transaminase (now known as serum aspartate aminotransferase), ornithine decarboxylase, gamma glutamyl transpeptidase, urea nitrogen, albumen blood creatinine, total bilirubin and total serum protein measurements. Other determinations which may be necessary for an adequate toxicological evaluation include: Analysis of lipids, hormones, acid/base balance, methemoglobin, and cholinesterase activity. Additional clinical biochemistry may be employed, where necessary, to extend the investigation of observed effects.

(ii) *Reporting requirements.* (A) The oral gavage subchronic tests with the substances designated in paragraph (c) of this section shall be completed and submitted to EPA within 12 months of the effective date of the final rule except that the tests with Bis(2-chloroethoxy)methane, 1,3-Dichloropropanol, and Malononitrile shall be completed and the results submitted to EPA within 15 months of the effective date of the final rule.

(B) Progress reports for each test shall be submitted to the Agency 6 months after the effective date of the final rule.

(2) [Reserved]

(f) *Effective date.* (1) The effective date of the final rule is July 29, 1988, except for paragraphs (d)(1)(i), (d)(1)(ii), (d)(2)(ii), (e)(1)(i), and (e)(1)(ii)(A) of this section. The effective date of paragraphs (d)(1)(i), (d)(1)(ii), (d)(2)(ii), (e)(1)(i)(B) and (e)(1)(ii)(A) of this section is March 1, 1990. The effective date of paragraph (e)(1)(i)(A), is May 21, 1991.

(2) The guidelines and other test methods cited here are referenced as

they exist on the effective date of the final rule.

[53 FR 22324, June 15, 1988; 53 FR 48645, Dec. 2, 1988, as amended at 54 FR 49760, Dec. 1, 1989; 55 FR 7324, Mar. 1, 1990; 56 FR 23232, May 21, 1991; 58 FR 34205, June 23, 1993]

§ 799.5075 Drinking water contaminants subject to testing.

(a) *Identification of test substance.* (1) 1,1,2,2-tetrachloroethane (CAS No. 79–34–5), and 1,3,5-trimethylbenzene (CAS No. 108–67–8) shall be tested as appropriate in accordance with this section.

(2) A test substance of at least 99 percent purity shall be used for Chloroethane, 1,1-dichloroethane, and 1,3,5-trimethylbenzene. A test substance of at least 98 percent purity shall be used for 1,1,2,2-tetrachloroethane.

(b) *Persons required to submit study plans, conduct tests, and submit data.* All persons who manufacture (including import and by-product manufacture) or process, or who intend to manufacture or process, the substances listed in paragraph (a) of this section after the effective date of this section to the end of the reimbursement period shall submit letters of intent to test, submit study plans, conduct tests, and submit data, or submit exemption applications as specified in this section, subpart A of this part, and parts 790 and 792 of this chapter for single-phase rulemaking, for the substances they manufacture subject to exclusions contained in § 790.42(a)(2), (a)(4) and (a)(5). These sections provide that processors, persons who manufacture less than 500 kg (1,100 lbs) annually, or persons who manufacture small quantities of the chemical solely for research and development as defined in § 790.42(a)(5) shall not be required to submit study plans, conduct tests and submit data, or submit exemption applications as specified in this section unless directed to do so in a subsequent notice as set forth in § 790.48(b).

(c) *Health effects testing*—(1) *Subacute toxicity*—(i) *Required testing.* (A) An oral 14-day repeated dose toxicity test shall be conducted with 1,1,2,2-tetrachloroethane, and 1,3,5-trimethylbenzene in accordance with § 798.2650 of this chapter except for the provisions in § 798.2650 (a), (b)(1), (c), (e)(3), (e)(4)(i), (e)(5), (e)(6), (e)(7)(i), (e)(7)(iv), (e)(7)(v), (e)(8)(vii), (e)(9)(i)(A), (e)(9)(i)(B), (e)(11)(v), and (f)(2)(i). Each substance shall be tested in one mammalian species, preferably a rodent, but a non-rodent may be used. The species and strain of animals used in this test should be the same as those used in the 90-day subchronic test required in paragraph (c)(2)(i) of this section. The tests shall be performed using drinking water. However, if, due to poor stability or palatability, a drinking water test is not feasible for a given substance, that substance shall be administered either by oral gavage, in the diet, or in capsules.

(B) For the purpose of this section, the following provisions also apply:

(*1*) *Purpose.* To assess and evaluate the toxic characteristics of a substance, the determination of subacute toxicity should be carried out after initial information on toxicity has been obtained by acute testing. The 14–day repeated dose oral study provides information on the health hazard likely to arise from repeated short-term exposure by the oral route over a very limited period of time. It has been designed to permit the determination of the no-observed-adverse-effect level and toxic effects associated with continuous or repeated exposure to a test substance for 14 days and to evaluate reversibility, persistence, and delayed occurrence of toxic effects during a 14–day follow-up recovery period. The test is not capable of determining those effects that have a long latency period for development (e.g., carcinogenicity and life shortening). It will provide information on target organs and the possibility of accumulation, and can be used in selecting dose levels for subchronic studies and for establishing safety criteria for short-term human exposure.

(*2*) *Definitions.* Subacute oral toxicity is the manifestation of adverse effect(s) occurring as a result of the repeated daily exposure of experimental animals to a substance by the oral route for 14 days.

(*3*) *Principle of the test method.* The test substance is administered orally in graduated daily doses to several groups of experimental animals, one dose level

per group, for a period of 14 days. During the period of administration the animals are observed daily to detect signs of toxicity. Animals which die during the period of administration are necropsied. At the conclusion of the test, all animals, except the satellite group, are necropsied and histopathological examinations are carried out. The satellite group is necropsied after the 14–day recovery period.

(*4*) *Satellite group (Rodent only).* A satellite group of 20 animals (10 animals per sex) shall be treated with the high dose level for 14 days and observed for reversibility, persistence, and delayed occurrence of toxic effects for a post-treatment recovery period of at least 14 days.

(*5*) *Dose levels and dose selection.* In subacute toxicity tests, it is desirable to have a dose response relationship as well as a NOAEL. Therefore, at least 3 dose levels with a control and, where appropriate, a vehicle control (corresponding to the concentration of vehicle at the highest exposure level) shall be used. Doses shall be spaced appropriately to produce test groups with a range of toxic effects. The data should be sufficient to produce a dose-response curve.

(*6*) *Exposure conditions.* The animals are dosed with the test substance every day for 14 days.

(*7*) *Observation period.* All animals shall be observed daily during the 14–day exposure period.

(*8*) *Observation period of satellite group.* Animals in the satellite group scheduled for follow-up observations shall be kept for at least 14 days further without treatment to detect recovery from, or persistence of, and delayed onset of toxic effects and shall be observed daily.

(*9*) *Administration of test substance.* For substances of low toxicity, it is important to ensure that when administered in the drinking water, by gavage, in the diet, or in capsules, the quantities of the test substance involved do not interfere with normal nutrition. When the test substance is administered in the diet, either a constant dietary concentration (ppm) or a constant dose level in terms of the animals' body weight shall be used; the alternative used shall be specified in the final test report.

(*10*) *Time of administration of test substance.* For a substance administered by gavage or capsule, the dose shall be given at approximately the same time each day, and adjusted on day 7 to maintain a constant dose level in terms of animal body weight.

(*11*) *Observation of animals.* At the end of the 14–day exposure period, all survivors, except those in the satellite group, shall be necropsied. All survivors in the satellite group shall be necropsied after a recovery period of at least 14 days.

(*12*) *Hematology determinations.* Certain hematology determinations shall be carried out at least two times during the test period: Just prior to initiation of dosing if adequate historical baseline data are not available (baseline data) and just prior to terminal sacrifice at the end of the test period. Hematology determinations which are appropriate to all studies are: Hematocrit, hemoglobin concentration, erythrocyte count, total and differential leukocyte count, and a measure of clotting potential such as clotting time, prothrombin time, thromboplastin time, or platelet count.

(*13*) *Clinical biochemical determinations.* Certain clinical biochemistry determinations on blood should be carried out at least two times: Just prior to initiation of dosing (if adequate historical baseline data are not available) and just prior to terminal sacrifice at the end of the test period. Test areas which are considered appropriate to all studies are: Electrolyte balance, carbohydrate metabolism, and liver and kidney function. The selection of specific tests will be influenced by observations on the mode of action of the substance. Suggested determinations are: Calcium, phosphorus, chloride, sodium, potassium, fasting glucose (with the period of fasting appropriate to the species), serum alanine aminotransferase, serum aspartate aminotransferase, gamma glutamyl transpeptidase, urea nitrogen, albumin, blood creatinine, and total serum protein measurements. Other determinations which may be necessary for an adequate toxicological evaluation include: analyses of lipids, hormones, acid/base balance,

methemoglobin, and cholinesterase activity. Additional clinical biochemistry may be employed, where necessary, to extend the investigation of observed effects.

(*14*) *Histopathology*. Histopathology of the lungs of all animals shall be performed. Special attention to examination of the lungs of rodents shall be made for evidence of infection since this provides a convenient assessment of the state of health of the animals.

(*15*) *Evaluation of the study results*. The findings of a subacute oral toxicity study should be evaluated in conjunction with the findings of preceding studies and considered in terms of the toxic effects and the necropsy and histopathological findings. The evaluation will include the relationship between the dose of the test substance and the presence or absence, the incidence and severity, of abnormalities, including behavioral and clinical abnormalities, gross lesions, identified target organs, body weight changes, effects on mortality and any other general or specific toxic effects. A properly conducted subacute test should provide a satisfactory estimation of a NOAEL.

(ii) *Reporting requirements*. (A) Each subacute test shall be completed and the final report submitted to EPA within 12 months of the date specified in paragraph (d)(1) of this section, except for 1,1,2,2-tetrachloroethane. The subacute testing for 1,1,2,2-tetrachloroethane. The subacute testing for 1,1,2,2-tetrachloroethane shall be completed and the final report submitted to EPA by February 15, 1996.

(B) Except for 1,3,5-trimethylbenzene, a progress report shall be submitted to EPA for each test beginning 6 months after the date specified in paragraph (d)(1) of this section and at 6–month intervals thereafter until the final report is submitted to EPA . The progress report for 1,3,5-trimethylbenzene shall be submitted to EPA by April 10, 1995.

(2) *Subchronic toxicity*—(i) *Required testing*. (A) An oral 90-day subchronic toxicity test shall be conducted with 1,3,5-trimethylbenzene in accordance with § 798.2650 of this chapter except for the provisions in § 798.2650 (e)(3), (e)(7)(i), and (e)(11)(v). The tests shall be performed using drinking water. However, if, due to poor stability or palatability, a drinking water test is not feasible for a given substance, that substance shall be administered either by oral gavage, in the diet, or in capsules.

(B) For the purpose of this section, the following provisions also apply:

(*1*) *Satellite group (Rodent only)*. A satellite group of 20 animals (10 animals per sex) shall be treated with the high dose level for 90 days and observed for reversibility, persistence, and delayed occurrence of toxic effects for a post-treatment period of appropriate length, normally not less than 28 days.

(*2*) *Histopathology*. Histopathology of the lungs of all animals shall be performed. Special attention to examination of the lungs of rodents shall be made for evidence of infection since this provides a convenient assessment of the state of health of the animals.

(ii) *Reporting requirements*. (A) The subchronic testing for chloroethane shall be completed and the final report submitted to EPA by June 27, 1995. The subchronic testing for 1,1-dichloroethane and 1,1,2,2-tetrachlorethane shall be completed and the final report submitted to EPA by August 27, 1995. The subchronic testing for 1,3,5-trimethylbenzene shall be completed and the final report submitted to EPA by April 10, 1995.

(B) For each test, a progress report shall be submitted to EPA beginning 9 months after the date specified in paragraph (d)(1) of this section and at 6–month intervals thereafter until the final report is submitted to EPA.

(d) *Effective date*. (1) This section is effective on December 27, 1993, except for paragraphs (a)(1), (a)(2), (c)(1)(i)(A), (c)(1)(ii)(A), (c)(1)(ii)(B), (c)(2)(i)(A), and (c)(2)(ii)(A). The effective date for paragraphs (a)(2), (c)(1)(ii)(B), and (c)(2)(ii)(A) is September 29, 1995. The effective date for paragraphs (a)(1), (c)(1)(i)(A), and (c)(2)(i)(A) is February 27, 1996. The effective date for paragraph (c)(1)(ii)(A) is June 30, 1997.

(2) The guidelines and other test methods cited in this section are referenced as they exist on the effective date of the final rule.

[58 FR 59681, Nov. 10, 1993; 58 FR 1992, Jan. 13, 1994, as amended at 60 FR 56956, Nov. 13, 1995; 61 FR 7223, Feb. 27, 1996; 62 FR 35105, June 30, 1997]

Subpart E—Product Properties Test Guidelines

SOURCE: 65 FR 78751, Dec. 15, 2000, unless otherwise noted.

§ 799.6755 TSCA partition coefficient (*n*-octanol/water), shake flask method.

(a) *Scope*—(1) *Applicability*. This section is intended to meet the testing requirements of the Toxic Substances Control Act (TSCA) (15 U.S.C. 2601).

(2) *Source*. The source material used in developing this TSCA test guideline is the Office of Prevention, Pesticides and Toxics (OPPTS) harmonized test guideline 830.7550 (August 1996, final guideline). The source is available at the address in paragraph (f) of this section.

(b) *Introductory information*—(1) *Prerequisites*. Suitable analytical method, dissociation constant, water solubility, and hydrolysis (preliminary test).

(2) *Coefficient of variation*. The coefficient of variation on the mean values reported by the participants of the Organization for Economic Coopertion and Development (OECD) Laboratory Intercomparison Testing, Part I, 1979, appeared to be dependent on the chemicals tested; it ranges from 0.17 to 1.03.

(3) *Qualifying statements*. This method applies only to pure, water soluble substances which do not dissociate or associate, and which are not surface active. In order to use the partition coefficient (P) as a screening test for bioaccumulation, it should be ascertained that the impurities in the commercial product are of minor importance. Testing of P (*n*-octanol/water) cannot be used as a screening test in the case of organometallic compounds.

(4) *Alternative methods*. High-pressure liquid chromatography (HPLC) methods described in the references in paragraphs (f)(3), (f)(4), and (f)(5) of this section may be considered as an alternative test method.

(c) *Method*—(1) *Introduction, purpose, scope, relevance, application, and limits of test*. The P of a substance between water and a lipophilic solvent (*n*-octanol) is one model variable which may be used to describe the transfer of a substance from the aquatic environment into an organism and the potential bioaccumulation of the substance. Studies show a highly significant relationship between the P of different substances in the system water/*n*-octanol and their bioaccumulation in fish described in paragraph (f)(1) of this section.

(2) *Definitions—Partition coefficient* (P) is defined as the ratio of the equilibrium concentrations (C_i) of a dissolved substance in a two-phase system consisting of two largely immiscible solvents. The P therefore is the quotient of two concentrations and is usually given in the form of its logarithm to base 10 (log P). In this case *n*-octanol and water:

Equation 1:

$$P_{ow} = C_{n\text{-octanol}}/C_{water}$$

(3) *Reference substances*. The reference substances need not be employed in all cases when investigating a new substance. They are provided primarily so that calibration of the method may be performed from time to time and to offer the chance to compare the results when another method is applied. The values presented in table 1 of this section are not necessarily representative of the results which can be obtained with this test method as they have been derived from an earlier version of the test guideline.

TABLE 1—DATA FOR REFERENCE SUBSTANCES

Tested substance [1]	P_{ow} [2]	
Di(2-ethylhexyl)phthalate (OECD)	1.3×10^5	($4.6 \times 10^4 - 2.8 \times 10^5$)
Hexachlorobenzene (OECD)	3.6×10^5	($1.1 \times 10^5 - 8.3 \times 10^5$)
o-Dichlorobenzene European Economic Community (EEC)	5.1×10^3	($1.5 \times 10^3 - 2.3 \times 10^4$)
Dibutyl phthalate (EEC)	1.3×10^4	($1.7 \times 10^3 - 2.8 \times 10^4$)
Trichloroethylene (OECD)	2.0×10^3	($5.2\times10^2 - 3.7\times10^3$)
Urea (OECD)	6.2×10^{-2}	(2.0×10^{-2}—2.4×10^{-1})

[1] Substances not tested: Ethyl acetate, 4-methyl-2,4-pentanediol.
[2] Total, mean, and range of mean values (in parentheses) submitted by the participants of the OECD or EEC Laboratory Intercomparison Testing.

(4) *Principle of the test method.* In order to determine a P, equilibrium between all interacting components of the system must be achieved, and the concentrations of the substances dissolved in the two phases must be determined. A study of the literature on this subject indicates that there are many different techniques which can be used to solve this problem, i.e. the thorough mixing of the two phases followed by their separation in order to determine the equilibrium concentration for the substance being examined.

(5) *Quality criteria*—(i) *Repeatability.* In order to assure the precision of the P, duplicate determinations are to be made under three different test conditions, whereby the quantity of substance specified as well as the ratio of the solvent volumes may be varied. The determined values of the P expressed as their common logarithms should fall within a range of ±0.3 log units.

(ii) *Sensitivity.* The sensitivity of the method is determined by the sensitivity of the analytical procedure. This should be sufficient to permit the assessment of values of P_{ow} up to 105 when the concentration of the solute in either phase is not more than 0.01 mol/Liter (L). The substance being tested must not be water insoluble (mass concentration $\rho \leq 10^{-6}$ gram (g)/L.

(iii) *Specificity.* The Nernst Partition Law applies only at constant temperature, pressure, and pH for dilute solutions. It strictly applies to a pure substance dispersed between two pure solvents. If several different solutes occur in one or both phases at the same time, this may affect the results. Dissociation or association of the dissolved molecules result in deviations from the Nernst Partition Law. Such deviations are indicated by the fact that the P becomes dependent upon the concentration of the solution. Because of the multiple equilibria involved, this test guideline should not be applied to ionizable compounds without corrections being made. The use of buffer solutions in place of water should be considered for such compounds.

(iv) *Possibility of standardization.* This method can be standardized.

(d) *Description of the test procedure*—(1) *Preparations: Preliminary estimate of the P.* The size of the P can be estimated either by means of calculation or by use of published solubilities of the test substance in the pure solvents. Alternatively, it may be roughly determined by performing a simplified preliminary test. For this:

Equation 2:

$$P_{estimate} = (\text{saturation } C_{n\text{-octanol}})/(\text{saturation } C_{water})$$

(2) *Preparation of the solvents*—(i) *n-Octanol.* The determination of the P should be carried out with analytical grade *n*-octanol. Inorganic contaminants can be removed from commercial *n*-octanol by washing with acid and base, drying, and distilling. More sophisticated methods will be required to separate the *n*-octanol from organic contaminants with similar vapor pressure if they are present.

(ii) *Water.* Distilled water or water twice-distilled from glass or quartz apparatus should be employed. Water taken directly from an ion exchanger should not be used.

(iii) *Presaturation of the solvents.* Before a P is determined, the phases of the solvent system are mutually saturated by shaking at the temperature of the experiment. For doing this, it is practical to shake two large stock bottles of purified *n*-octanol or distilled water each with a sufficient quantity of the other solvent for 24 hours on a mechanical shaker, and then to let them stand long enough to allow the phases to separate and to achieve a saturation state.

(3) *Preparation for the test.* The entire volume of the two-phase system should nearly fill the test vessel. This will help prevent loss of material due to volatilization. The volume ratio and quantities of substance to be used are fixed by the following:

(i) The preliminary assessment of the P as discussed in paragraph (d)(1) of this section).

(ii) The minimum quantity of test substance required for the analytical procedure.

(iii) The limitation of a maximum concentration in either phase of 0.01 mol/L.

(iv) Three tests are carried out. In the first, the calculated volume ratio is added; in the second, twice the volume of *n*-octanol is added; and in the third, half the volume of *n*-octanol is added.

(4) *Test substance.* The test substance should be the purest available. For a material balance during the test a stock solution is prepared in *n*-octanol with a mass concentration between 1 and 100 milligram/milliliter (mg/mL). The actual mass concentration of this stock solution should be precisely determined before it is employed in the determination of the P. This solution should be stored under stable conditions.

(5) *Test conditions.* The test temperature should be kept constant (±1 °C) and lie in the range of 20–25 °C.

(6) *Performance of the test*—(i) *Establishment of the partition equilibrium.* Duplicate test vessels containing the required, accurately measured amounts of the two solvents together with the necessary quantity of the stock solution should be prepared for each of the test conditions. The *n*-octanol parts should be measured by volume. The test vessels should either be placed in a suitable shaker or shaken by hand. A recommended method is to rotate the centrifuge tube quickly through 180° about its transverse axis so that any trapped air rises through the two phases. Experience has shown that 50 such rotations are usually sufficient for the establishment of the partition equilibrium. To be certain, 100 rotations in 5 minutes are recommended.

(ii) *Phase separation.* In order to separate the phases, centrifugation of the mixture should be carried out. This should be done in a laboratory centrifuge maintained at room temperature, or, if a non-temperature-controlled centrifuge is used, the centrifuge tubes should be reequilibrated at the test temperature for at least 1 hour before analysis.

(7) *Analysis.* (i) For the determination of the P, it is necessary to analyze the concentrations of the test substance in both phases. This may be done by taking an aliquot of each of the two phases from each tube for each test condition and analyzing them by the chosen procedure. The total quantity of substances present in both phases should be calculated and compared with the quantity of the substance originally introduced.

(ii) The aqueous phase should be sampled by the following procedure to minimize the risk of including traces of the *n*-octanol: A glass syringe with a removable needle should be used to sample the water phase. The syringe should initially be partially filled with air. Air should be gently expelled while inserting the needle through the *n*-octanol layer. An adequate volume of aqueous phase is withdrawn into the syringe. The syringe is quickly removed from the solution and the needle detached. The contents of the syringe may then be used as the aqueous sample.

(iii) The concentration in the two-separated phases should preferably be determined by a substance-specific method. Examples of physical-chemical determinations which may be appropriate are:

(A) Photometric methods.

(B) Gas chromatography.

(C) HPLC.

(D) Back-extraction of the aqueous phase and subsequent gas chromatography.

(e) *Data and reporting*—(1) *Treatment of results.* The reliability of the determined values of P can be tested by comparison of the means of the duplicate determinations with the overall mean.

(2) *Test report.* The following should be included in the report:

(i) Name of the substance, including its purity.

(ii) Temperature of the determination.

(iii) The preliminary estimate of the P and its manner of determination.

(iv) Data on the analytical procedures used in determining concentrations.

(v) The measured concentrations in both phases for each determination.

This means that a total of 12 concentrations must be reported.

(vi) The weight of the test substance, the volume of each phase employed in each test vessel, and the total calculated amount of test substance present in each phase after equilibration.

(vii) The calculated values of the P and the mean should be reported for each set of test conditions as should the mean for all determinations. If there is a suggestion of concentration dependency of the P, this should be noted in the report.

(viii) The standard deviation of individual P values about their mean should be reported.

(ix) The mean P from all determinations should also be expressed as its logarithm (base 10).

(f) *References.* For additional background information on this test guideline, the following references should be consulted. These references are available from the TSCA Nonconfidential Information Center, Rm. NE–B607, Environmental Protection Agency, 401 M St., SW., Washington, DC, 12 noon to 4 p.m., Monday through Friday, excluding legal holidays.

(1) Neely, W.B. et al. Partition Coefficients to Measure Bioconcentration Potential of Organic Chemicals in Fish. *Environmental Science and Technology* 8:1113 (1974).

(2) Leo, A. et al. Partition Coefficients and Their Uses. *Chemical Reviews* 71:525 (1971).

(3) Miyake, K. and H. Terada, Direct measurements of partition coefficients in an octanol-water system. *Journal of Chromatography* 157:386 (1978).

(4) Veith G.D. and R.T. Morris, A Rapid Method for Estimating Log P for Organic Chemicals, EPA–600/3–78–049 (1978).

(5) Mirrless, M.S. et al., Direct measurement of octanol-water partition coefficient by high pressure liquid chromatography. *Journal of Medicinal Chemistry* 19:615 (1976).

(6) EPA Draft Guidance of September 8, 1978 (F–16).

(7) Konemann H. et al. Determination of log P_{oct} values of chlorosubstituted benzenes, toluenes, and anilines by high performance liquid chromatography on ODS silica, *Journal of Chromatography* 178:559 (1979).

(8) *Organization for Economic Cooperation and Development*, Guidelines for The Testing of Chemicals, OECD 107, Partition Coefficient (*n*-octanol/water) (Shake Flask Method, Adopted 27 July 1995), OECD, Paris, France.

§ 799.6756 TSCA partition coefficient (*n*-octanol/water), generator column method.

(a) *Scope*—(1) *Applicability*. This section is intended to meet the testing requirements of the Toxic Substances Control Act (TSCA) (15 U.S.C. 2601).

(2) *Source.* The source material used in developing this TSCA test guideline is the Office of Pollution Prevention, Pesticides and Toxic Substances (OPPTS) harmonized test guideline 830.7560 (August 1996, final guideline). This source is available at the address in paragraph (e) of this section.

(b)(1) *Purpose.* (i) The measurement and estimation of the *n*-octanol/water partition coefficient (K_{ow}), has become the cornerstone of a myriad of structure-activity relationships (SAR) property. The coefficient has been used extensively for correlating structural changes in drugs with changes observed in biological, biochemical, or toxic effects. These correlations are then used to predict the effect of a new drug for which a K_{ow} could be measured.

(ii) In the study of the environmental fate of organic chemicals, the K_{ow} has become a key parameter. K_{ow} is correlated to water solubility, soil/sediment sorption coefficient, and bioconcentration and is important to SAR.

(iii) Of the three properties that can be estimated from K_{ow}, water solubility is the most important because it affects both the fate and transport of chemicals. For example, highly soluble chemicals become quickly distributed by the hydrologic cycle, have low-sorption coefficients for soils and sediments, and tend to be more easily degraded by microorganisms. In addition, chemical transformation processes such as hydrolysis, direct photolysis, and indirect photolysis (oxidation) tend to occur more readily if a compound is soluble.

(iv) Direct correlations between K_{ow} and both the soil/sediment sorption coefficient and the bioconcentration factor are to be expected. In these cases, compounds that are more soluble in *n*-octanol (more hydrophobic and lipophilic) would be expected to partition out of the water and into the organic portion of soils/sediments and into lipophilic tissue. The relationship between K_{ow} and the bioconcentration

factor, are the principal means of estimating bioconcentration factors. This relationship is discussed in the reference listed in paragraph (e)(14) of this section. These factors are then used to predict the potential for a chemical to accumulate in living tissue.

(v) This section describes a method for determining the K_{ow} based on the dynamic coupled column liquid chromatographic (DCCLC) technique, a technique commonly referred to as the generator column method. The method described herein can be used in place of the standard shake-flask method specified in § 799.6755 for compounds with a $\log_{10}K_{ow}$ greater than 1.0.

(2) *Definitions.* The following definitions apply to this section.

Extractor column is used to extract the solute from the aqueous solution produced by the generator column. After extraction onto a bonded chromatographic support, the solute is eluted with a solvent/water mixture and subsequently analyzed by high-performance liquid chromatography (HPLC), gas chromatography (GC), or any other analytical procedure. A detailed description of the preparation of the extractor column is given in paragraph (c)(1)(i) of this section.

Generator column is used to partition the test substance between the *n*-octanol and water phases. The column in figure 1 in paragraph (c)(1)(i)(A)(*2*) of this section is packed with a solid support and is coated with the test substance at a fixed concentration in *n*-octanol. The test substance is eluted from the column with water and the aqueous solution leaving the column represents the equilibrium concentration of the test substance that has partitioned from the *n*-octanol phase into the water phase. Preparation of the generator column is described in paragraph (c)(1)(i) of this section.

n-Octanol/water partition coefficient (K_{ow}) is defined as the ratio of the molar concentrations of a chemical in *n*-octanol and water, in dilute solution. The coefficient K_{ow} is a constant for a given chemical at a given temperature. Since K_{ow} is the ratio of two molar concentrations, it is a dimensionless quantity. Sometimes K_{ow} is reported as the decadic logarithm ($\log_{10}K_{ow}$). In this equation, $C_{octanol}$ and C_{water} are the molar concentration of the solute in *n*-octanol and water, respectively, at a given temperature. This test procedure determines K_{ow} at 25 ± 0.05 °C. The mathematical statement of K_{ow} is:

Equation 1:

$$K_{ow} = C_{octanol}/C_{water}$$

Response factor (RF) is the solute concentration required to give a one unit area chromatographic peak or one unit output from the HPLC recording integrator at a particular recorder and detector attenuation. The factor is required to convert from units of area to units of concentration. The determination of the RF is given in paragraph (c)(3)(iii)(C)(*2*) of this section.

Sample loop is a 1/16 inch (in) outside diameter (O.D.) (1.6 millimeter (mm)) stainless steel tube with an internal volume between 20 and 50 µL. The loop is attached to the sample injection valve of the HPLC and is used to inject standard solutions into the mobile phase of the HPLC when determining the RF for the recording integrator. The exact volume of the loop must be determined as described in paragraph (c)(3)(iii)(C)(*1*) of this section when the HPLC method is used.

(3) *Principle of the test method.* (i) This test method is based on the DCCLC technique for determining the aqueous solubility of organic compounds. The development of this test method is described in the references listed in paragraphs (e)(6), (e)(12), and (e)(19) of this section. The DCCLC technique utilizes a generator column, extractor column, and HPLC coupled or interconnected to provide a continuous closed-flow system. Aqueous solutions of the test compound are produced by pumping water through the generator column that is packed with a solid support coated with an approximately 1.0% weight/weight (w/w) solution of the compound in *n*-octanol. The aqueous solution leaving the column represents the equilibrium concentration of the test chemical which has partitioned from the *n*-octanol phase into the water phase. The compound is extracted from the aqueous solution onto an extractor column, then eluted from

the extractor column with a solvent/water mixture and subsequently analyzed by HPLC using a variable wavelength ultraviolet (UV) absorption detector operating at a suitable wavelength. Chromatogram peaks are recorded and integrated using a recording integrator. The concentration of the compound in the effluent from the generator column is determined from the mass of the compound (solute) extracted from a measured volume of water (solvent). The K_{ow} is calculated from the ratio of the molar concentration of the solute in the 1.0% (w/w) *n*-octanol and molar concentration of the solute in water as determined using the generator column technique.

(ii) Since the HPLC method is only applicable to compounds that absorb in the UV, an alternate GC method, or any other reliable quantitative procedure must be used for those compounds that do not absorb in the UV. In the GC method the saturated solutions produced in the generator column are extracted using an appropriate organic solvent that is subsequently injected into the GC, or any other suitable analytical device, for analysis of the test compound.

(4) *Reference chemicals.* (i) Columns 2, 3, 4, and 5 of table 1 in paragraph (b)(4)(ii) of this section list the experimental values of the decadic logarithm of the *n*-octanol/water partition coefficient ($\log_{10}K_{ow}$) at 25 °C for a number of organic chemicals as obtained from the scientific literature. These values were obtained by any one of the following experimental methods: Shake-flask; generator column; reverse-phase HPLC; or reverse-phase thin-layer chromatography, as indicated in the footnotes following each literature citation. The estimation method of Hawker and Connell as described in paragraph (e)(8) of this section, correlates $\log_{10}K_{ow}$ with the total surface area of the molecule and was used to estimate $\log_{10}K_{ow}$ for biphenyl and the chlorinated biphenyls. These estimated values are listed in column 7 of table 1 in paragraph (b)(4)(ii) of this section. Recommended values of $\log_{10}K_{ow}$ were obtained by critically analyzing the available experimental and estimated values and averaging the best data. These recommended values are listed in column 8 of table 1 in paragraph (b)(4)(ii) of this section.

(ii) The recommended values listed in table 1 of this section have been provided primarily so that the generator column method can be calibrated and to allow the chemical laboratory the opportunity to compare its results with these values. The testing laboratory has the option of choosing its reference chemicals, but references must be given to establish the validity of the measured values of $\log_{10}K_{ow}$.

TABLE 1—N-OCTANOL/WATER PARTITION COEFFICIENT AT 25 °C FOR SOME REFERENCE COMPOUNDS

Chemical	Experimental $\log_{10}K_{ow}$				Estimated $\log_{10}K_{ow}$		Recommended $\log_{10}K_{ow}$
	Hansch and Leo[1]	Generator Column Method	Banerjee[2]	Other values	Hansch and Leo[3]	Hawker and Connell[4]	
Ethyl acetate	0.73, 0.66	[5]0.68	—	—	0.671	—	[17]0.685
1-Butanol	0.88, 0.89, 0.32, 0.88	[5]0.785	—	—	0.823	—	[23]0.852
1-Pentanol	1.28, 1.40	[5]1,53	—	—	1.35	—	[17]1.39
Nitrobenzene	1.85, 1.88, 1.79	[5]1.85	1.83	[6]1.82	1.89	—	[17]1.84
Benzene	2.15, 2.13	—	2.12	—	2.14	—	[17]2.14
Trichloroethylene	2.29	[5]2.53	2.42	—	2.27	—	[17]2.38
Chlorobenzene	2.84, 2.46	[7]2.98	—	[8]2.84	2.86	—	[18]2.80
o-Dichlorobenzene	3.38	[7]3.38	3.40	[8]3.38	3.57	—	[17]3.42
n-Propylbenzene	3.66, 3.66, 3.68, 3.57	[5]3.69	—	—	3.85	—	[17]3.69
Biphenyl	3.95, 4.17, 4.09, 4.04	[7]3.67, [9]3.89, [10]3.79	4.04	[6]3.75	4.03	4.09	[17]3.96
2-Chlorobiphenyl	—	[7]4.50, [9]4.38	—	[10]3.90, [11]3.75, [12]4.59, [13]4.54	—	4.99	[19]4.49
1,2,3,5-Tetrachlorobenzene	—	[7]4.65	4.46	—	4.99	—	[17]4.70

TABLE 1—N-OCTANOL/WATER PARTITION COEFFICIENT AT 25 °C FOR SOME REFERENCE COMPOUNDS—Continued

Chemical	Experimental $log_{10}K_{ow}$				Estimated $log_{10}K_{ow}$		Recommended $log_{10}K_{ow}$
	Hansch and Leo[1]	Generator Column Method	Banerjee[2]	Other values	Hansch and Leo[3]	Hawker and Connell[4]	
2,2′-Dichlorobiphenyl	—	[9]4.90	—	[9]4.90, [10]3.63, [11]3.55, [14]4.51, [15]5.02	—	4.65	[20]4.80
Pentachlorobenzene	—	[7]5.03	4.94	—	5.71	—	[24]4.99
2,4,5-Trichlorobiphenyl	—	[7]5.51, [9]5.81	—	[10]5.67, [10]5.86, [15]5.77	—	5.60	[17]5.70
2,3,4,5-Tetrachlorobiphenyl	—	[4]6.18, [7]5.72	—	—	—	6.04	[17]5.98
2,2′,4,5,5′-Pentachlorobi-phenyl	6.11	[9]6.50, [7]5.92	—	[13]6.11, [12]6.85	—	6.38	[17]6.31
2,2′,3,3′,6,6′-Hexachloro-biphenyl	—	[4]5.76, [7]6.63, [9]6.81	—	—	—	6.22	[17]6.36
2,2′,3,3′,4,4′,6-Heptachlorobiphenyl	—	[7]6.68	—	—	—	7.11	[17]6.90
2,2′,3,3′,5,5′,6,6′-Octachlorobiphenyl	—	[7]7.11, [9]7.14	—	[12]8.42	—	7.24	[21]7.16
2,2′,3,3′,4, 4′,5,6,6′-Nona-chlorobiphenyl	—	[4]7.52	—	—	—	7.74	[17]7.63
2,2′,3,3′,4, 5,5′6,6′-Nona-chlorobiphenyl	—	[7]8.16	—	—	—	7.71	[17]7.94
Decachlorobiphenyl	—	[7]8.26, [9]8.20	—	[12]9.60	—	8.18	[22]8.21

[1] Hansch and Leo (1979). Shake-flask method in paragraph (e)(8) of this section.
[2] Banerjee, Yalkowski, and Valvani (1980). Shake-flask method in paragraph (e)(1) of this section.
[3] Hansch and Leo (1984). Estimates $log_{10}K_{ow}$ using the CLogP3 computer program in paragraph (e)(9) of this section.
[4] Hawker and Connell (1988). Generator column method and an estimation method correlating $log_{10}K_{ow}$ with the total surface area of the molecule in paragraph (e)(8) of this section.
[5] Tewari et al. (1982). Generator column method in paragraph (e)(14) of this section.
[6] Veith, Austin, and Morris (1979). Reverse-phase HPLC method in paragraph (e)(16) of this section.
[7] Miller et al. (1984). Generator column method in paragraph (e)(11) of this section.
[8] Chiou and Schmedding (1982). Shake-flask method in paragraph (e)(4) of this section.
[9] Woodburn, Doucette, and Andren (1984). Generator column method in paragraph (e)(19) of this section.
[10] Rapaport and Eisenreich (1984). Reverse-phase HPLC method in paragraph (e)(13) of this section.
[11] Woodburn (1982). Reverse-phase HPLC method in paragraph (e)(18) of this section.
[12] Bruggemann, Van der Steen, and Hutzinger (1978). Shake-flask method in paragraph (e)(2) of this section.
[13] Tulp and Hutzinger (1978). Shake-flask method in paragraph (e)(15) of this section.
[14] Chiou, Porter, and Schmedding (1983). Shake-flask method in paragraph (e)(5) of this section.
[15] Bruggemann, Van Der Steen , and Hutzinger (1982). Reverse-phase thin-layer chromatography in paragraph (e)(2) of this section.
[16] Chiou et al. (1977). Shake-flask method in paragraph (e)(3) of this section.
[17] Average value using all the data.
[18] Average value using all the data except the datum point 2.46.
[19] Average value using all the data except the data points 3.90 and 3.75.
[20] Average value using all the data except the data points 3.63 and 3.55.
[21] Average value using all the data except the datum point 8.42.
[22] Average value using all the data except the datum point 9.60.
[23] Average value using all the data except the datum point 0.32.
[24] Average value using all the data excluding the estimated datum point 5.71.

(5) *Applicability and specificity*. The test guideline is designed to determine the K_{ow} of solid or liquid organic chemicals in the range $log_{10}K_{ow}$ 1.0 to ≤6.0 (10 to ≤10^6).

(c) *Test procedure*—(1) *Test conditions*—(i) *Special laboratory equipment*—(A)(*1*) *Generator column*. Either of two different methods for connecting to the generator column shall be used depending on whether the eluted aqueous phase is analyzed by HPLC (Procedure A, as described in paragraph (c)(3)(iii) of this section) or by solvent extraction followed by GC analysis, or any other reliable method of solvent extract (Procedure B, as described in paragraph (c)(3)(iv) of this section).

(*2*)(*i*) The design of the generator column is shown in the following figure 1:

Figure 1—Generator Column

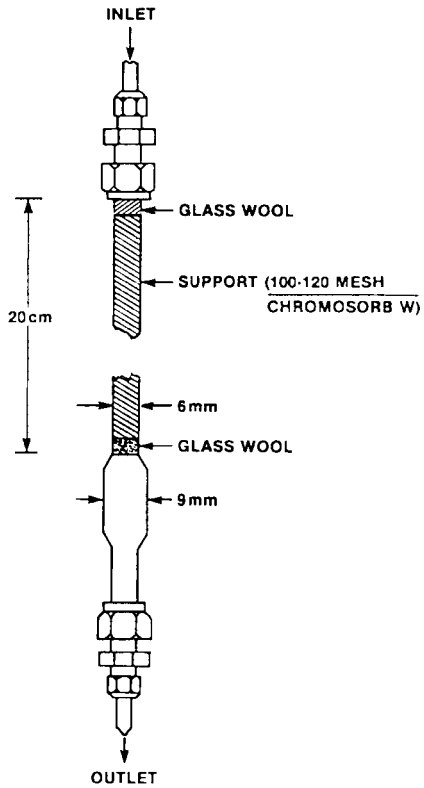

(*ii*) The column consists of a 6 mm (¼ in) O.D. pyrex tube joined to a short enlarged section of 9 mm pyrex tubing which in turn is connected to another section of 6 mm (¼ in) O.D. pyrex tubing. Connections to the inlet teflon tubing (⅛ in O.D.) and to the outlet stainless steel tubing (1⁄16 in O.D.) are made by means of stainless steel fittings with teflon ferrules. The column is enclosed in a water jacket for temperature control as shown in the following figure 2:

FIGURE 2—SETUP SHOWING GENERATOR COLUMN ENCLOSED IN A WATER JACKET AND OVERALL ARRANGEMENT OF THE APPARATUS USED IN GC METHOD

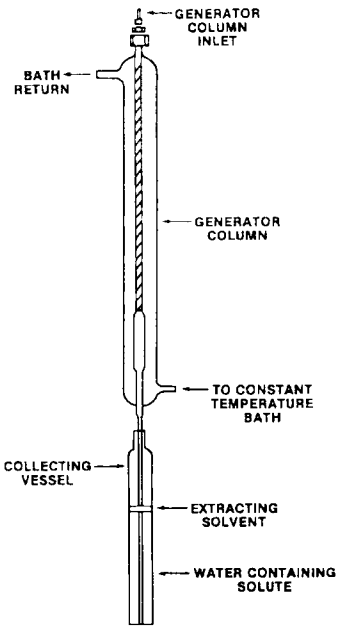

(B) Constant temperature bath with circulation pump-bath and capable of controlling temperature to 25 ±0.05 °C. (Procedures A and B, as described in paragraphs (c)(3)(iii) and (c)(3)(iv) of this section, respectively).

(C) HPLC equipped with a variable wavelength UV absorption detector operating at a suitable wavelength and a recording integrator (Procedure A, as described in paragraph (c)(3)(iii) of this section).

(D) Extractor column—6.6 × 0.6 centimeter (cm) stainless steel tube with end fittings containing 5 micron frits filled with a superficially porous phase packing (such as Bondapack C_{18} Corasil: Waters Associates) (Procedure A, as described in paragraph (c)(3)(iii) of this section).

(E) Two 6-port high-pressure rotary switching valves (Procedure A, as described in paragraph (c)(3)(iii) of this section).

(F) Collection vessel—8 × ¾ in section of pyrex tubing with a flat bottom connected to a short section of ⅜ in O.D.

borosilicate glass tubing. The collecting vessel is sealed with a ⅜ in teflon cap fitting (Procedure B, as described in paragraph (c)(3)(iv) of this section).

(G) GC, or any other reliable analytic equipment, equipped with a detector sensitive to the solute of interest (Procedure B, as described in paragraph (c)(3)(iv) of this section).

(ii) *Purity of n-octanol and water.* Purified *n*-octanol, described in paragraph (c)(2)(i) of this section, and water meeting appropriate American Society for Testing and Materials Type II standards, or an equivalent grade, are recommended to minimize the effects of dissolved salts and other impurities. An ASTM Type II water standard is presented in the reference listed in paragraph (e)(20) of this section).

(iii) *Purity of solvents.* It is important that all solvents used in this method be reagent or HPLC grade and contain no impurities which could interfere with the determination of the test compound.

(iv) *Reference compounds.* In order to ensure that the HPLC system is working properly, at least two of the reference compounds listed in table 1 in paragraph (b)(4)(ii) of this section should be run. Reference compounds shall be reagent or HPLC grade to avoid interference by impurities.

(2) *Preparation of reagents and solutions*—(i) *n-Octanol and water.* Very pure *n*-octanol can be obtained as follows: Wash pure *n*-octanol (minimum 98% pure) sequentially with 0.1N H^2SO_4, with 0.1N NaOH, then with distilled water until neutral. Dry the *n*-octanol with magnesium sulfate and distill twice in a good distillation column under reduced pressure [b.p. about 80 °C at 0.27 kPa (2 torr)]. The *n*-octanol produced should be at least 99.9% pure. Alternatively, a grade equivalent to Fisher Scientific Co. No. A–402 ''Certified Octanol–1'' can be used. Reagent-grade water shall be used throughout the test procedure, such as ASTM Type II water, or an equivalent grade, as described in paragraph (c)(1)(ii) of this section.

(ii) *Presaturated water.* Prepare presaturated water with *n*-octanol to minimize the depletion of *n*-octanol from the column when measuring the K_{ow} of a test chemical. This is very important when the test chemical is lipophilic and the $\log_{10}K_{ow} \leq 4$.

(3) *Performance of the test.* Initially, an approximately 1.0% (w/w) solution of the test substance in *n*-octanol is prepared. Precise measurement of the solute concentration in this solution is required for the K_{ow} calculation. Subsequently, the 1.0% (w/w) solution is coated on the generator column and using either Procedure A or Procedure B as described in paragraphs (c)(3)(iii) and (c)(3)(iv) of this section, the molar concentration of the test substance in reagent-grade water is determined.

(i) *Test solution.* The test solution consists of an approximately 1.0% (w/w) solution of the test substance in *n*-octanol. A sufficient quantity (about 10–20 milliliter (mL)) of the test solution should be prepared to coat the generator column. The solution is prepared by accurately weighing out, using a tared bottle, quantities of both the test substance and *n*-octanol required to make a 1.0% (w/w) solution. When the weights are measured precisely (to the nearest 0.1 milligram (mg)), knowing the density of *n*-octanol (0.827 gram (g)/mL at 25 °C), then the molar concentration of the test substance in the *n*-octanol is sufficiently accurate for the purposes of the test procedure. If desired, however, a separate analytical determination (e.g., by GC, or any other reliable analytical method) may be used to check the concentration in the test solution. If storage is required, the test solution should be kept stoppered to prevent volatilization of the test chemical.

(ii) *Test procedures.* Prior to the determination of the K_{ow} of the test chemical, two procedures shall be followed:

(A) The saturated aqueous solution leaving the generator column shall be tested for the presence of an emulsion, using a Tyndall procedure (i.e. light scattering). If colloids are present, they must be removed prior to injection into the extractor column by lowering the flow rate of water.

(B) The efficiency of removal of the solute (the test chemical) by solvent extraction from the extractor column

shall be determined and used in the determination of the K_{ow} of the test chemical.

(iii) *Procedure A—HPLC method.* (A) Procedure A covers the determination of the aqueous solubility of compounds which absorb in the UV. Two reciprocating piston pumps deliver the mobile phase (water or solvent/water mixture) through two 6-port high-pressure rotary valves and a 30×0.6 cm C_{18} analytical column to a UV absorption detector operating at a suitable wavelength. Chromatogram peaks are recorded and integrated with a recording integrator. One of the 6-port valves is the sample injection valve used for injecting samples of standard solutions of the solute in an appropriate concentration for determining RFs or standard solutions of basic chromate for determining the sample-loop volume. The other 6-port valve in the system serves as a switching valve for the extractor column which is used to remove solute from the aqueous solutions. The HPLC analytical system is shown schematically in the following figure 3:

FIGURE 3—SCHEMATIC OF HPLC—GENERATOR COLUMN FLOW SYSTEM

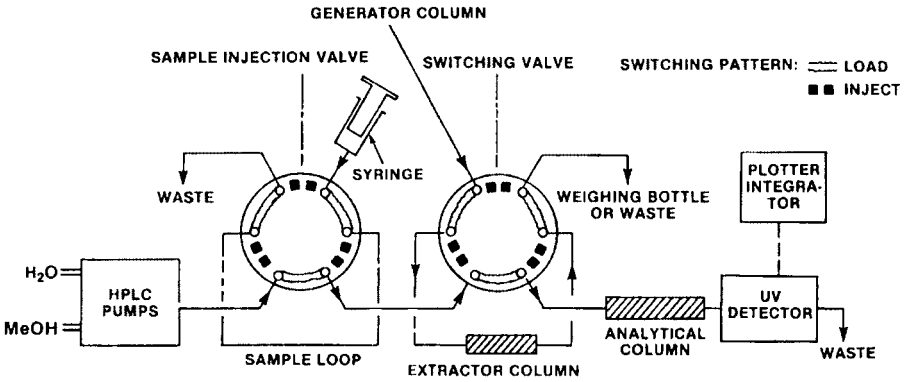

(B) The general procedure for analyzing the aqueous phase after equilibration is as follows; a detailed procedure is given in paragraph (c)(3)(iii)(C)(*4*) of this section:

(*1*) Direct the aqueous solution from the generator column to ''Waste'' in figure 3 in paragraph (c)(3)(iii)(A) of this section with the switching valve in the inject position in order to equilibrate internal surfaces with the solution, thus insuring that the analyzed sample would not be depleted by solute adsorption on surfaces upstream from the valve.

(*2*) At the same time, water is pumped from the HPLC pumps in order to displace the solvent from the extractor column.

(*3*) The switching valve is next changed to the load position to divert a sample of the solution from the generator column through the extractor column, and the liquid leaving the extractor column is collected in a tared weighing bottle. During this extraction step, the HPLC mobile phase is changed to a solvent/water mixture to condition the analytical column.

(*4*) After the desired volume of sample is extracted, the switching valve is returned to the inject position for elution from the extractor column and analysis. Assuming that all of the solute was adsorbed by the extractor column during the extraction step, the chromatographic peak represents all of the solute in the extracted sample, provided that the extraction efficiency is 100%. If the extraction efficiency is less than 100%, then the extraction efficiency shall be measured and used to determine the actual amount of the solute extracted.

(*5*) The solute concentration in the aqueous phase is calculated from the

peak area, the weight of the extracted liquid collected in the weighing bottle, the extraction efficiency, and the RF.

(C)(*1*) *Determination of the sample-loop volume.* Accurate measurement of the sample loop may be accomplished by using a spectrophotometric method such as the one described in the reference listed in paragraph (e)(6) of this section. For this method, measure absorbance, $A_{loop,}$ at 373 nanometers (nm) for at least three solutions, each of which is prepared by collecting from the sample valve an appropriate number, n, of loopfuls of an aqueous stock solution of K_2CrO_4 (1.3% by weight) and diluting to 50 mL with 0.2% KOH. (For a 20 µL loop, use n = 5; for a 50 µL loop, use n = 2.) Also measure the absorbance, A_{stock}, of the same stock solution after diluting 1:500 with 0.2% KOH. Calculate the loop volume to the nearest 0.1 µL using the relation:

Equation 2:

$$V_{loop} = \left(A_{loop}/A_{stock}\right)\left(10^{-4}/n\right)$$

(*2*) *Determination of the RF.* (*i*) For all determinations adjust the mobile phase solvent/water ratio and flow rate to obtain a reasonable retention time on the HPLC column. For example, typical concentrations of organic solvent in the mobile phase range from 50 to 100% while flow rates range from 1 to 3 mL/minutes (min); these conditions often give a 3 to 5 min retention time.

(*ii*) Prepare standard solutions of known concentrations of the solute in a suitable solvent. Concentrations must give a recorder response within the maximum response of the detector. Inject samples of each standard solution into the HPLC system using the calibrated sample loop. Obtain an average peak area from at least three injections of each standard sample at a set detector absorbance unit full scale (AUFS), i.e., at the same absorbance scale attenuation setting.

(*iii*) Calculate the RF from the following equation:

Equation 3:

$$\text{Response Factor (RF)} = \frac{\text{Concentration mol/L}}{\text{(Average Area) (AUFS)}}$$

(*3*) *Loading of the generator column.* (*i*) The design of the generator column was described in paragraph (c)(1)(i) of this section and is shown in figure 1 in paragraph (c)(1)(i)(A)(*2*)(*i*) of this section. To pack the column, a plug of silanized glass wool is inserted into one end of the 6 mm pyrex tubing. Silanized diatomaceous silica support (about 0.5g of 100–120 mesh Chromosorb W chromatographic support material) is poured into the tube with tapping and retained with a second plug of silanized glass wool.

(*ii*) The column is loaded by pulling the test solution through the dry support with gentle suction and then allowing the excess solution to drain out. After loading the column, draw water up through the column to remove any entrapped air.

(*4*) *Analysis of the solute.* Use the following procedure to collect and analyze the solute:

(*i*) With the switching valve in figure 3 in paragraph (c)(3)(iii)(A) of this section in the inject position (i.e., water to waste), pump water through the generator column at a flow rate of approximately 1 mL/min for approximately 15 min to bring the system into equilibrium. Pump water to the generator column by means of a minipump or pressurized water reservoir as shown in the following figure 4:

FIGURE 4—WATER RESERVOIR FOR GC METHOD

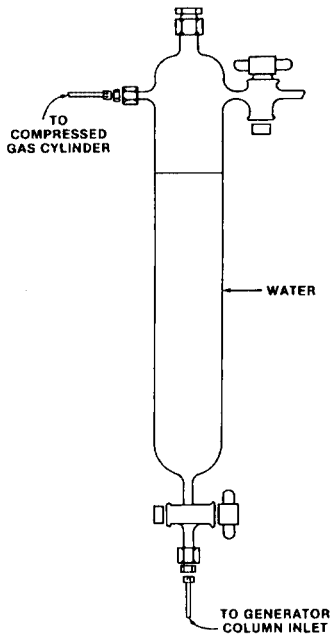

(*ii*) Flush out the organic solvent that remains in the system from previous runs by changing the mobile phase to 100% H_2O and allowing the water to reach the HPLC detector, as indicated by a negative reading. As soon as this occurs, place a 25 mL weighing bottle (weighed to the nearest mg) at the waste position and immediately turn the switching valve to the load position.

(*iii*) Collect an amount of water from the generator column (as determined by trial and error) in the weighing bottle, corresponding to the amount of solute adsorbed by the extractor column that gives a reasonable detector response. During this extraction step, switch back to the original HPLC mobile phase composition, i.e., solvent/water mixture, to condition the HPLC analytical column.

(*iv*) After the desired volume of sample has been extracted, turn the switching valve back to the inject position in figure 3 in paragraph (c)(3)(iii)(A) of this section. As soon as the switching valve is turned to the inject position, remove the weighing bottle, cap it and replace it with the waste container; at the same time turn on the recording integrator. The solvent/water mobile phase will elute the solute from the extractor column and transfer the solute to the HPLC analytical column.

(*v*) Determine the weight of water collected to the nearest mg and record the corresponding peak area. Using the same AUFS setting repeat the analysis of the solute at least two more times and determine the average ratio of peak area to grams of water collected. In this equation, S = solubility (M), RF = response factor, V_{loop} = sample-loop volume (L), and R = ratio of area to grams of water. Calculate the solute solubility in water using the following equation:

Equation 4:

$$S = (997\ \text{g/L})(\text{RF})(V_{loop})(\text{AUFS})(\text{R})$$

(iv) *Procedure B—GC Method.* In the GC method, or any other reliable quantitative method, aqueous solutions from the generator column enter a collecting vessel in figure 2 in paragraph (c)(1)(i)(A)(*2*)(*ii*) of this section containing a known weight of extracting solvent which is immiscible in water. The outlet of the generator column is positioned such that the aqueous phase always enters below the extracting solvent. After the aqueous phase is collected, the collecting vessel is stoppered and the quantity of aqueous phase is determined by weighing. The solvent and the aqueous phase are equilibrated by slowly rotating the collecting vessel. A small amount of the extracting solvent is then removed and injected into a GC equipped with an appropriate detector. The solute concentration in the aqueous phase is determined from a calibration curve constructed using known concentrations of the solute. The extraction efficiency of the solvent shall be determined in a separate set of experiments.

(A) *Determination of calibration curve.* (*1*) Prepare solute standard solutions of concentrations covering the expected range of the solute solubility. Select a column and optimum GC operating conditions for resolution between the solute and solvent and the solute and

extracting solvent. Inject a known volume of each standard solution into the injection port of the GC. For each standard solution determine the average of the ratio R of peak area to volume (in μL) for the chromatographic peak of interest from at least three separate injections.

(*2*) After running all the standard solutions, determine the coefficients, a and b, using linear regression analysis on the equation of concentration (C) vs. R in the form:

Equation 5:

$$C = aR + b$$

(B) *Loading of the generator column.* The generator column is packed and loaded with solute in the same manner as for the HPLC method in paragraph (c)(3)(iii) of this section. As shown in figure 2 in paragraph (c)(1)(i)(A)(*2*)(*ii*) of this section, attach approximately 20 cm of straight stainless steel tubing to the bottom of the generator column. Connect the top of the generator column to a water reservoir in figure 4 in paragraph (c)(3)(iii)(C)(*4*)(*i*) of this section using teflon tubing. Use air or nitrogen pressure (5 PSI) from an air or nitrogen cylinder to force water from the reservoir through the column. Collect water in an Erlenmeyer flask for approximately 15 min while the solute concentration in water equilibrates; longer time may be required for less soluble compounds.

(C) *Collection and extraction of the solute.* During the equilibration time, add a known weight of extracting solvent to a collection vessel which can be capped. The extracting solvent should cover the bottom of the collection vessel to a depth sufficient to submerge the collecting tube but still maintain 100:1 water/solvent ratio. Record the weight (to the nearest mg) of a collection vessel with cap and extracting solvent. Place the collection vessel under the generator column so that water from the collecting tube enters below the level of the extracting solvent in figure 2 in paragraph (c)(1)(i)(A)(*2*)(*ii*) of this section. When the collection vessel is filled, remove it from under the generator column, replace cap, and weigh the filled vessel. Determine the weight of water collected. Before analyzing for the solute, gently rotate the collection vessel contents for approximately 30 min, controlling the rate of rotation so as not to form an emulsion; rotating the flask end over end five times per minute is sufficient. The extraction efficiency of the solvent shall be determined in a separate set of experiments.

(D) *Analysis of the solute.* (*1*) After rotating, allow the collection vessel to stand for approximately 30 min; then remove a known volume of the extracting solvent from the vessel using a microliter syringe and inject it into the GC. Record the ratio of peak area to volume injected and, from the regression equation of the calibration line, determine the concentration of solute in the extracting solvent. If the extraction efficiency is not 100%, the measured extraction efficiency shall be used to obtain the correct concentration of solute extracted. In this equation, C_{es} is the molar concentration of solute in extracting solvent, d_{H_2O} and d_{es} are the densities in grams per milliliter of water and extracting solvent, respectively, and g_{es} and g_{H_2O} are the grams of extracting solvent and water, respectively, contained in the collection vessels. The molar concentration of solute in water C(M) is determined from the following equation:

Equation 6:

$$C(M) = (C_{es})\left[d_{H_2O}/d_{es}\right]\left[g_{es}/g_{H_2O}\right]$$

(*2*) Make replicate injections from each collecting vessel to determine the average solute concentration in water for each vessel. To make sure the generator column has reached equilibrium, run at least two additional (for a total of three) collection vessels and analyze the extracted solute as described in paragraph (c)(3)(iv)(D)(*1*) of this section. Calculate C(M) from the average solute concentration in the three vessels.

(*3*) If another analytical method is used in place of the GC, then Procedure B, as described in paragraph (c)(3)(iv) of this section, shall be modified and the new analytical procedure shall be used to determine quantitatively the amount of solute extracted in the extraction solvent.

(v) *Analysis of reference compounds.* Prior to analyzing the test solution, make duplicate runs on at least two of the reference compounds listed in table 1 in paragraph (b)(4)(ii) of this section. When using the reference compounds, follow the same procedure previously described for preparing the test solution and running the test. If the average value obtained for each compound is within 0.1 log unit of the reference value, then the test procedure and HPLC system are functioning properly; if not a thorough checking over of the HPLC and careful adherence to the test procedures should be done to correct the discrepancy.

(vi) *Modification of procedures for potential problems—Decomposition of the test compound.* If the test compound decomposes in one or more of the aqueous solvents required during the period of the test at a rate such that an accurate value for water solubility cannot be obtained, then it will be necessary to carry out detailed transformation studies, such as hydrolysis studies. If decomposition is due to aqueous photolysis, then it will be necessary to carry out the studies in the dark, under red or yellow lights, or by any other suitable method to eliminate this transformation process.

(d) *Data and reporting*—(1) *Test report.* (i) For the test solution, report the weights to the nearest 0.1 mg of the test substance and *n*-octanol. Also report the weight percent and molar concentration of the test substance in the *n*-octanol; the density of *n*-octanol at 25 °C is 0.827 grams per milliliter (gm)/mL.

(ii) For each run provide the molar concentration of the test substance in water for each of three determinations, the mean value, and the standard deviation.

(iii) For each of the three determinations calculate the K_{ow} as the ratio of the molar concentration of the test substance in *n*-octanol to the molar concentration in water. Also calculate and report the mean K_{ow} and its standard deviation. Values of K_{ow} shall be reported as their logarithms ($\log_{10}K_{ow}$).

(iv) Report the temperature (± 0.05 °C) at which the generator column was controlled during the test.

(v) For each reference compound report the individual values of $\log_{10}K_{ow}$ and the average of the two runs.

(vi) For compounds that decompose at a rate such that a precise value for the solubility cannot be obtained, provide a statement to that effect.

(2) *Specific analytical, calibration, and recovery procedures.* (i) For the HPLC method describe and/or report:

(A) The method used to determine the sample-loop volume and the average and standard deviation of that volume.

(B) The average and standard deviation of the RF.

(C) The extraction solvent and the extraction efficiency used.

(D) Any changes made or problems encountered in the test procedures.

(ii) For the GC method report:

(A) The column and GC operating conditions of temperature and flow rate.

(B) The average and standard deviation of the average area per microliter obtained for each of the standard solutions.

(C) The form of the regression equation obtained in the calibration procedure.

(D) The extracting solvent and extraction efficiency used.

(E) The average and standard deviation of solute concentration in each collection vessel.

(F) Any changes made or problems encountered in the test procedure.

(iii) If another approved analytical method is used to determine the concentration of the test chemical in water, then all the important test conditions shall be reported.

(iv) If the concentration of the test substance in *n*-octanol is determined by an independent analytical method such as GC, provide a complete description of the method.

(e) *References.* For additional background information on this test guideline, the following references should be consulted. These references are available from the TSCA Nonconfidential Information Center, Rm. NE–B607, Environmental Protection Agency, 401 M St., SW., Washington, DC, 12 noon to 4 p.m., Monday through Friday, excluding legal holidays.

(1) Banerjee, S. et al., Water solubility and octanol/water partition coefficient of organics. Limitation of the solubility-partition coefficient correlation. *Environmental Science and Technology* 14:1227–1229 (1980).

(2) Bruggemann W.A. et al., Reversed-phase thin-layer chromatography of polynuclear aromatic hydrocarbons and chlorinated biphenyls. Relationship with hydrophobicity as measured by aqueous solubility and octanol/water partition coefficient. *Journal of Chromatography* 238: 335–346 (1982).

(3) Chiou, C.T. et al. Partition coefficient and bioaccumulation of selected organic chemicals. *Environmental Science and Technology* 11:475–478 (1977).

(4) Chiou, C.T. and Schmedding, D.W., Partitioning of organic compounds in octanol/water systems. *Environmental Science and Technology* 16:4–10 (1982).

(5) Chiou, C.T et al., Partition equilibria of nonionic organic compounds between soil, organic matter, and water. *Environmental Science and Technology* 17:227–231 (1983).

(6) DeVoe, H. et al. ''Generator Columns and High Pressure Liquid Chromatography for Determining Aqueous Solubilities and Octanol-Water Partition Coefficients of Hydrophobic Substances,'' *Journal of Research of the National Bureau of Standards,* 86:361–366 (1981).

(7) Fujita, T. et al. ''A New Substituent Constant, Derived from Partition Coefficients.'' *Journal of the American Chemical Society,* 86:5175 (1964).

(8) Hansch, C. and Leo, A. 1985 MEDCHEM Project, version 26. Pomona College, Claremont, CA. USA.

(9) Hansch, C. and Leo, A. Medchem Software Manual. CLOGP3 Users Guide. Release 3.32. December 1984. Medicinal Chemistry Project, Pomona College, Claremont, CA.

(10) Hawker, D.W. and Connell, D.W. Octanol-water partition coefficients of polychlorinated biphenyl congeners. *Environmental Science and Technology* 22:382–387 (1988).

(11) May, W.E. et al. ''Determination of the aqueous solubility of polynuclear aromatic hydrocarbons by a coupled column liquid chromatographic technique,'' *Analytical Chemistry,* 50:175–179 (1978).

(12) May, W.E. et al. ''Determination of the Solubility Behavior of Some Polycyclic Aromatic Hydrocarbons in Water,'' *Analytical Chemistry* 50:997–1000 (1978).

(13) Miller, M.M. et al. Aqueous solubilities, octanol/water partition coefficients and entropies of melting of chlorinated benzenes and biphenyls. *Journal of Chemical and Engineering Data* 29:184–190 (1984).

(14) Neely, W.B. et al. Partition Coefficient to Measure Bioconcentration Potential of Organic Chemicals in Fish, *Environmental Science Technology,* 8:113–115 (1974).

(15) Rappaport, R.A. and Eisenrich, S.J. Chromatographic determination of octanol-water partition coefficients (K_{ow}'s) for 58 polychlorinated biphenyl congeners. *Environmental Science and Technology* 18:163–170 (1984).

(16) Tewari, Y.B. et al. Aqueous solubility and octanol/water partition coefficients of organic compounds at 25 °C. *Journal of Chemical and Engineering Data* 27:451–454 (1982).

(17) Tulp, M.T.M. and Hutzinger, O. Some thoughts on aqueous solubilities and partition coefficients of PCB, and the mathematical correlation between bioaccumulation and physio-chemical properties. *Chemosphere* 10:849–860 (1978).

(18) Veith, G.D. et al. A rapid method for estimating $\log_{10}$ P for organic chemicals, *Water Research* 13:43–47 (1979).

(19) Wasik, S.P. et al. Octanol/water partition coefficient and aqueous solubilities of organic compounds, Report NBSIR 81–2406 (1981). National Bureau of Standards, U.S. Department of Commerce, Washington, DC.

(20) Woodburn, K.B. Measurement and application of the octanol/water partition coefficients for selected polychlorinated biphenyls. Master's Thesis (1982), University of Wisconsin at Madison, Madison, WI.

(21) Woodburn, K.B. et al. Generator column determination of octanol/water partition coefficients for selected polychlorinated biphenyl congeners. *Environmental Science and Technology* 18:457–459 (1984).

(22) ASTM D 1193–91 (Approved Sep 15, 1991), ''Standard Specification for Reagent Water.'' American Society for Testing and Materials (ASTM), 1916 Race St., Philadelphia, PA 19103.

§ 799.6784 TSCA water solubility: Column elution method; shake flask method.

(a) *Scope*—(1) *Applicability*. This section is intended to meet the testing requirements of the Toxic Substances Control Act (TSCA) (15 U.S.C. 2601).

(2) *Source.* The source material used in developing this TSCA test guideline is the Office of Pollution Prevention, Pesticides and Toxics (OPPTS) harmonized test guideline 830.7840 (March 1998, revised final guideline). This source is available at the address in paragraph (f) of this section.

(b) *Introductory information*—(1) *Prerequisites.* Suitable analytical method, structural formula, vapor pressure curve, dissociation constant, and hydrolysis independence of pH (preliminary test).

(2) *Coefficient of variation*. The coefficient of variation on the mean values

reported by the participants of the Organization for Economic Cooperation and Development (OECD) Laboratory Intercomparison Testing, Part I, 1979, appeared to be dependent on the chemicals tested and the test temperatures; it ranges from 0.05 to 0.34 for the column elution method, and from 0.03 to 1.12 for the flask method.

(3) *Qualifying statements.* (i) The method is not applicable to volatile substances. Care should be taken that the substances examined are as pure as possible and stable in water. It must be ascertained that the identity of the substance is not changed during the procedure.

(ii) The column elution method is not suitable for volatile substances. The carrier material used here may not yet be optimal. This method is intended for material with solubilities below approximately 10^{-2} gram/Liter (g/L).

(iii) The flask method is intended for materials with solubility above 10^{-2} g/L. It is not applicable to volatile substances; this method may pose difficulties in the case of surface-active materials.

(c) *Method*—(1) *Introduction, purpose, scope, relevance, application, and limits of test.* (i) A solution is a homogeneous mixture of different substances in a solvent. The particle sizes of the dispersed substances are of the same magnitude as molecules and ions; therefore, the smallest volumes which can be obtained from a solution are always of uniform composition.

(ii) Solubility in water is a significant parameter because:

(A) The spatial and temporal movement (mobility) of a substance is largely determined by its solubility in water.

(B) Water soluble substances gain ready access to humans and other living organisms.

(C) The knowledge of the solubility in water is a prerequisite for testing biological degradation and bioaccumulation in water and for other tests.

(iii) No single method is available to cover the whole range of solubilities in water, from relatively soluble to very low-soluble chemicals. A general test guideline for the determination of the solubility in water must include methods which cover the whole range of water soluble substances. Therefore, this section includes two methods:

(A) One which applies to substances with low solubilities ($<10^{-2}$ g/L), referred to as the ''column elution method.''

(B) The other which applies to substances with higher solubilities ($\leq 10^{-2}$ g/L), referred to as the ''flask method.''

(2) *Definition.* The solubility in water of a substance is specified by the saturation mass concentration of the substance in water and is a function of temperature. The solubility in water is specified in units of weight per volume of solution. The SI-unit is killogram/meter $(kg/m)^3$; g/L may also be used.

(3) *Reference substances.* The reference substances need not be employed in all cases when investigating a new substance. They are provided primarily so that calibration of the method may be performed from time to time and to offer the chance to compare the results when another method is applied. The values presented in table 1 of this section are not necessarily representative of the results which can be obtained with this test method as they have been derived from an earlier version of the test method.

TABLE 1—DATA FOR REFERENCE SUBSTANCES

Method	T, °C	Mean (milligram (mg)/L)	Range (mg/L)	No. of labs
Fluoranthene				
Elution method	15	0.275	0.104 to 0.920	6
	25	0.373	0.198 to 1.050	7
Hexachlorobenzene				
Elution method	15	9.21×10^{-3}	2.06×10^{-3} to 2.16×10^{-2}	6
	25	9.96×10^{-3}	1.19×10^{-3} to 2.31×10^{-2}	7
γ-Hexachlorocyclohexane				
Elution method	15	6.50	4.43 to 10.5	6
	25	9.20	6.64 to 14.5	7
2,4-Dichlorophenoxyacetic acid				
Flask method	15	0.633	0.380 to 0.764	5
	25	0.812	0.655 to 0.927	5

TABLE 1—DATA FOR REFERENCE SUBSTANCES—Continued

Method	T, °C	Mean (milligram (mg)/L)	Range (mg/L)	No. of labs
Mercury(II) chloride:				
Flask method	15	53.0	47.7 to 56.5	4
	25	66.4	58.3 to 70.4	4
4-Nitrophenol:				
Flask method	15	9.95	8.88 to 10.9	6
	25	14.8	13.8 to 15.9	6

(4) *Principle of the test methods.* The approximate amount of the sample and the time necessary to achieve the saturation mass concentration should be determined in a simple preliminary test.

(i) *Column elution method.* This method is based on the elution of a test substance with water from a microcolumn which is charged with an inert carrier material such as glass beads, silica gel, or sand, and an excess of test substance. The water solubility is determined when the mass concentration of the eluate is constant. This is shown by a concentration plateau as a function of time in the following figure 1:

FIGURE 1—CONCENTRATION VERSUS TIME OF SUBSTANCE IN THE ELUATE

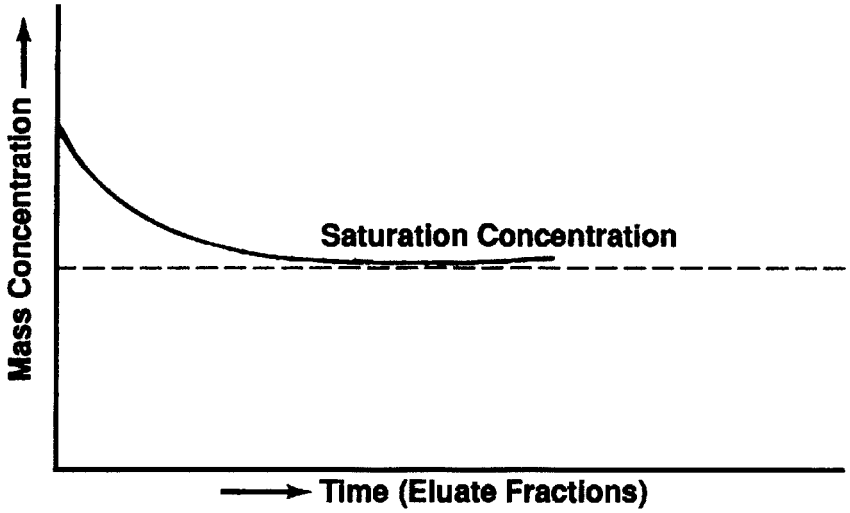

(ii) *Flask method.* In this method, the substance (solids must be pulverized) is dissolved in water at a temperature somewhat above the test temperature. When saturation is achieved, the mixture is cooled and kept at the test temperature, stirring as long as necessary to reach equilibrium. Such a procedure is described in the reference listed in paragraph (f)(2) of this section. Subsequently, the mass concentration of the substance in the aqueous solution, which must not contain any undissolved particles, is determined by a suitable analytical method.

(5) *Quality criteria*—(i) *Repeatability.* For the column elution method <30% is acceptable; for the flask method <15% should be observed.

(ii) *Sensitivity*. This depends upon the method of analysis, but mass concentration determinations down to at least 10^{-6} g/L can be determined.

(iii) *Specificity*. These methods should only be applied to:

(A) Pure substance.

(B) Substances that are stable in water.

(C) Slightly soluble substances, i.e. $<10^{-2}$ g/L for the column elution method.

(D) Organic substances for the column elution method.

(iv) *Possibility of standardization*. These methods can be standardized.

(d) *Description of the test procedures*—(1) *Preparations*—(i) *Apparatus*—(A) *Column elution method*. (*1*) The schematic arrangement of the system is presented in the following figure 2:

FIGURE 2—SCHEMATIC TEST ARRANGEMENT

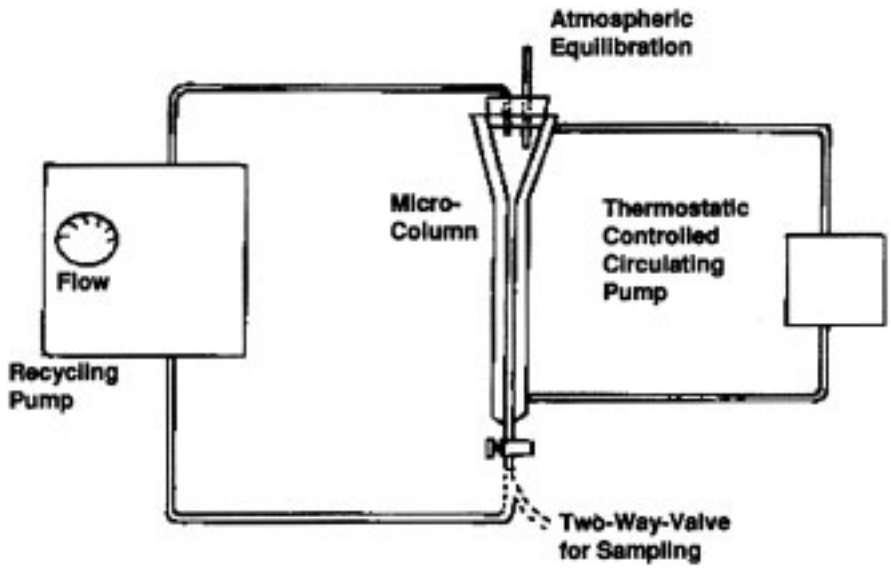

(*2*) Although any size is acceptable, provided it meets the criteria for reproducibility and sensitivity. The column should provide for a head space of at least five bed-volumes of water and a minimum of five samples. Alternatively, the size can be reduced if make-up solvent is employed to replace the initial five bed-volumes removed with impurities. A suitable micro-column is shown in the following figure 3:

FIGURE 3—MICROCOLUMN (ALL DIMENSIONS IN MILLIMETERS)

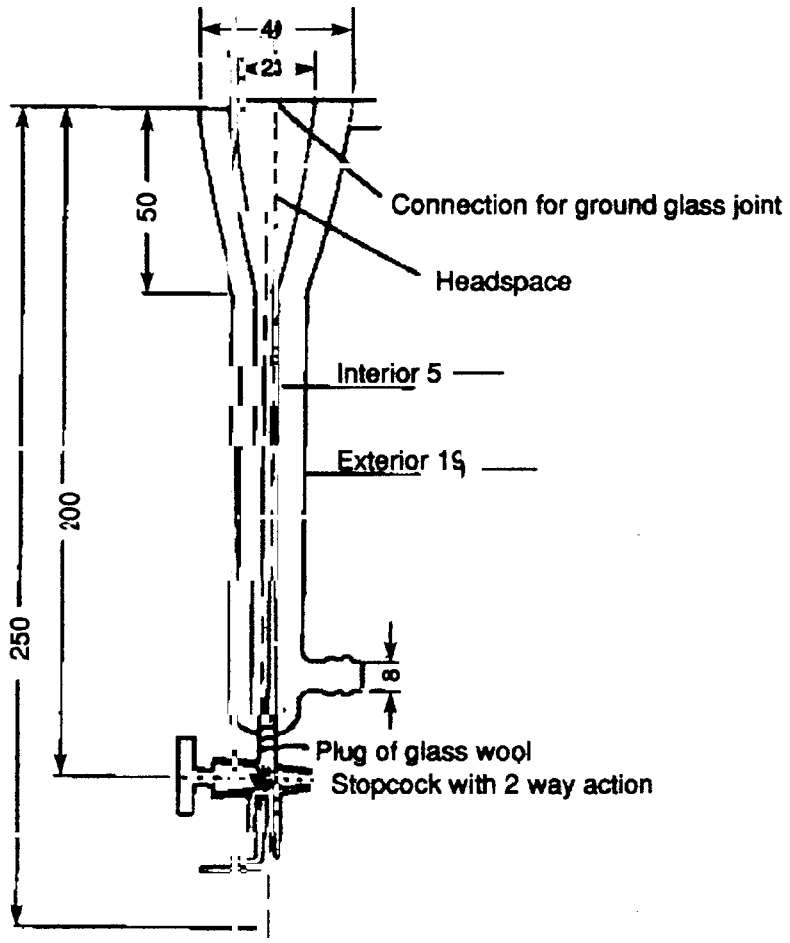

(*3*) The column should be connected to a recycling pump capable of controlling flows of approximately 25 mL/hours (h). The pump is connected with polytetrafluoroethylene and/or glass connections. The column and pump, when assembled, should have provision for sampling the effluent and equilibrating the head space at atmospheric pressure. The column material is supported with a small (5 millimeter (mm)) plug of glass wool, which must also serve to filter particles.

(B) *Flask method.* For the flask method, the following material is needed:

(*1*) Normal laboratory glassware and instrumentation.

(*2*) A device suitable for the agitation of solutions under controlled constant temperatures.

(*3*) A centrifuge (preferably thermostatted), if required with emulsions.

(*4*) Equipment for analytical determinations.

(2) *Reagents.* The substance to be tested should be as pure as possible, particularly in the flask method where purification is not provided. The carrier material for the column elution

method should be inert. Possible materials which can be employed are glass beads and silica. A suitable volatile solvent of analytical reaction quality should be used to apply the test substance to the carrier material. Double distilled water from glass or quartz apparatus should be employed as the eluent or solvent. Water directly from an ion exchanger must not be used.

(3) *Test conditions.* The test is preferably run at 20±0.5 °C (293 °K). If temperature dependence is suspected in the solubility (≤ 3%/ °C), two other temperatures should also be used—both differing from each other and the initially chosen temperature by 10 °C. In this case the temperature control should be ±0.1 °C. One of these additional temperatures should be below the initial temperature. The chosen temperature(s) should be kept constant in all parts of the equipment (including the leveling vessel).

(4) *Performance of the tests*—(i) *Preliminary test.* (A) To approximately 0.1 g of the sample (solid substances must be pulverized) in a glass-stoppered 10 milliliter (mL) graduated cylinder, increasing volumes of distilled water at room temperature are added according to the steps shown in Table 2 of this section:

TABLE 2—DETERMINATION OF SOLUBILITY

Solubility data	step 1	step 2	step 3	step 4	step 5	step 6	step 7
Total volume H_2O added (mL)	0.1	0.5	1	2	10	100	≤100
Approximate solubility (g/L)	≤1,000	200	100	50	10	1	<1

(B) After each addition of water to give the indicated total volume, the mixture is shaken vigorously for 10 min and is visually checked for any undissolved parts of the sample. If, after a total of 10 mL of water has been added (step 5), the sample or parts of it remain undissolved, the contents of the measuring cylinder is transferred to a 100 mL measuring cylinder which is then filled up with water to 100 mL (step 6) and shaken. At lower solubilities the time required to dissolve a substance can be considerably long (24 h should be allowed). The approximate solubility is given in the table under that volume of added water in which complete dissolution of the sample occurs. If the substance is still apparently insoluble, further dilution should be undertaken to ascertain whether the column elution or flask solubility method should be used.

(ii) *Column elution*—(A) *Apparatus.* (*1*) The equipment is arranged as shown in figures 2 and 3 in paragraphs (d)(1)(i)(A)(*1*) and (d)(1)(i)(A)(*2*) of this section. Approximately 600 milligrams (mg) of carrier material is weighed and transferred to a 50 mL round-bottom flask. A suitable, weighed amount of test substance is dissolved in the chosen solvent, and an appropriate amount of the test substance solution is added to the carrier material. The solvent must be completely evaporated, e.g. in a rotary evaporator; otherwise water saturation of the carrier is not achieved due to partition effects on the surface of the carrier.

(*2*) The loading of carrier material may cause problems (erroneous results) if the test substance is deposited as an oil or a different crystal phase. The problem should be examined experimentally.

(*3*) The loaded carrier material is allowed to soak for about 2 h in approximately 5 mL of water, and then the suspension is added to the microcolumn. Alternatively, dry loaded carrier material may be poured in the microcolumn, which has been filled with water and then equilibrated for approximately 2 h.

(B) *Test procedure.* The elution of the substance from the carrier material can be carried out in two different ways: Leveling vessel or circulating pump. The two principles should be used alternatively.

(*1*) Leveling vessel, see figure 3 in paragraph (d)(1)(i)(A)(*2*) and figure 4 in paragraph (d)(4)(iii) of this section.

(*i*) The connection to the leveling vessel is made by using a ground glass joint which is connected by teflon tubing. It is recommended that a flow rate

of approximately 25 mL/h be used. Successive eluate fractions should be collected and analyzed by the chosen method.

(*ii*) Fractions from the middle eluate range where the concentrations are constant (± 30%) in at least five consecutive fractions are used to determine the solubility in water.

(*iii*) A second run is to be performed at half the flow rate of the first. If the results of the two runs are in agreement, the test is satisfactory; if there is a higher apparent solubility with the lower flow rate, then the halving of the flow rate must continue until two successive runs give the same solubility.

(*2*) Circulating pump, see figures 2 and 3 in paragraphs (d)(1)(i)(A)(*1*) and (d)(1)(i)(A)(*2*) of this section.

(*i*) With this apparatus, the microcolumn must be modified. A stopcock with 2–way action must be used, see figure 3 in paragraph (d)(1)(i)(A)(*2*) of this section). The circulating pump can be, e.g. a peristaltic pump (be careful that no contamination and/or adsorption occurs with the tube material) or a membrane pump.

(*ii*) The flow through the column is started. It is recommended that a flow rate of approximately 25 mL/h be used (approximately 10 bed volumes per h for the described column). The first five-bed volumes (minimum) are discarded to remove water soluble impurities.

(*iii*) Following this, the recycling pump is connected and the apparatus allowed to run until equilibration is established, as defined by five successive samples whose concentrations do not differ by more than 30% in a random fashion (see paragraph (f)(2) of this section). These samples should be separated from each other by time intervals corresponding to the passage of at least 10 bed-volumes of the eluent.

(*3*) In both cases (using a circulation pump or a leveling vessel) the fractions should be checked for the presence of colloidal matter by examination for the Tyndall effect (light scattering). Presence of such particles invalidates the results, and the test should be repeated with improvements in the filtering action of the column. The pH of each sample should be recorded. A second run should be performed at the same temperature.

(iii) *Flask method: Test procedure.* The quantity of material necessary to saturate the desired volume of water is estimated from the preliminary test. The volume of water required will depend on the analytical method and the solubility range. About five times the quantity of material determined in paragraph (d)(4)(i)(A) of this section is weighed into each of three glass vessels fitted with glass stoppers (e.g. centrifuge tubes, flasks). The chosen volume of water is added to each vessel, and the vessels are tightly stoppered. The closed vessels are then agitated at 30 °C. (A shaking or stirring device capable of operating at constant temperature should be used, *e.g.* magnetic stirring in a thermostatically controlled water bath.) After 1 day, one of the vessels is removed and re-equilibrated for 24 h at the test temperature with occasional shaking. The contents of the vessel are then centrifuged at the test temperature, and the concentration of compound in the clear aqueous phase is determined by a suitable analytical method. The other two flasks are treated similarly after initial equilibration at 30 °C for 2 and 3 days, respectively. If the concentration results from at least the last two vessels agree with the required reproducibility, the test is satisfactory. The whole test should be repeated, using longer equilibration times if the results from vessels one, two, and three show a tendency to increasing values. The arrangement of the apparatus is shown in the following figure 4:

FIGURE 4—TEST ARRANGEMENT FOR THE DETERMINATION OF SOLUBILITY IN WATER OF SLIGHTLY SOLUBLE, LOW VOLATILITY ORGANIC SUBSTANCES

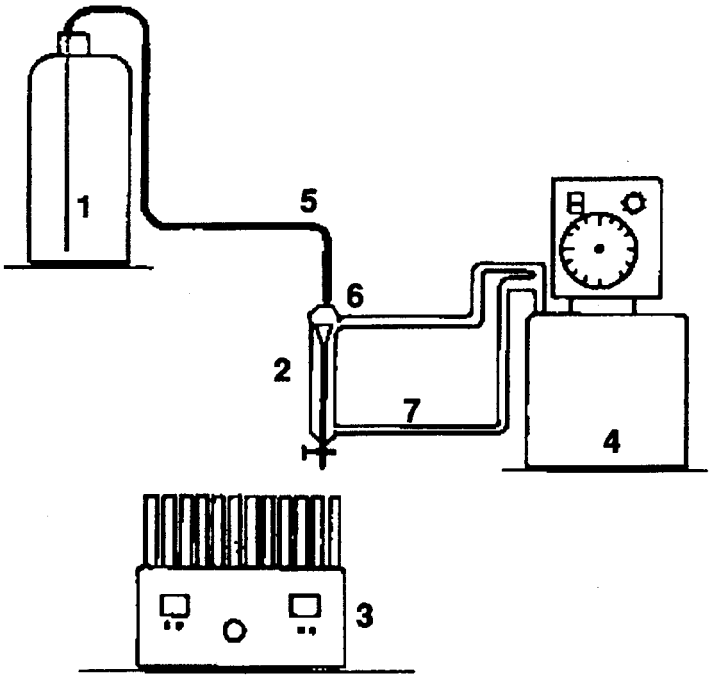

1 = Leveling vessel (e.g. 2.5 L chemical flask)

2 = Column (see figure 3 in paragraph (d)(1)(i)(A)(*2*) of this section)

3 = Fraction accumulator

4 = Thermostat

5 = Teflon tubing

6 = Glass stopper

7 = Water line (between thermostat and column, inner diameter: approximately 8 mm)

(iv) *Analysis.* A substance-specific analytical method is required for these determinations, since small amounts of soluble impurities can cause large errors in the measured solubility. Examples of such methods are gas or liquid chromatography, titration methods, photometric methods, and polarographic methods.

(e) *Data and reporting*—(1) *Column elution method*—(i) *Treatment of results.* The mean value from at least five consecutive samples taken from the saturation plateau (figure 1 in paragraph (c)(4)(i) of this section) should be determined for each run, as should the standard deviation. A comparison should be made between the two means to ensure that they agree with a repeatability of less than 30%.

(ii) *Test report.* The report should contain an indication of the results of the preliminary test plus the following information:

(A) The individual concentrations, flow rates and pHs of each samples.

(B) The means and standard deviations from at least five samples from the saturation plateau of each run.

(C) The average of the two successive, acceptable runs.

(D) The temperature of the runs.

(E) The method of analysis employed.

(F) The nature of the carrier material employed.

(G) Loading of carrier material.

(H) Solvent used.

(I) Statement that the identity of the substance in the saturated solution has been proved.

(2) *Flask method*—(i) *Treatment of results.* The individual results should be given for each of the three flasks and those results deemed to be constant (repeatability <15%) should be averaged and given in units of mass per volume of solution. This may require the conversion of mass units to volume units, using the density when the solubility is very high (100 g/L).

(ii) *Test report.* The report should include the following information:

(A) The individual analytical determinations and the average where more than one value was determined for each flask.

(B) The average of the value for the different flasks which were in agreement.

(C) The test temperature.

(D) The analytical method employed.

(f) *References.* For additional information on this test guideline, the following references should be consulted. These references are available from the TSCA Nonconfidential Information Center, Rm. NE–B607, Environmental Protection Agency, 401 M St., SW., Washington, DC, 12 noon to 4 p.m., Monday through Friday, excluding legal holidays.

(1) Veith, G.D. and V.M. Comstock. Apparatus for continuously saturating water with hydrophobic organic chemicals. *Journal of the Fishing Research Board of Canada* 32:1849–1851 (1975).

(2) *Organization for Economic Cooperation and Development,* Guidelines for The Testing of Chemicals, OECD 105, Water Solubility (Column Elution Method—Shake Flask Method), OECD, Paris, France (1981).

§ 799.6786 TSCA water solubility: Generator column method.

(a) *Scope*—(1) *Applicability.* This section is intended to meet the testing requirements of the Toxic Substances Control Act (TSCA) (15 U.S.C. 2601).

(2) *Source.* The source material used in developing this TSCA test guideline is the Office of Pollution Prevention, Pesticides and Toxics (OPPTS) harmonized test guideline 830.7860 (March 1998, revised final guideline). The source is available at the address in paragraph (e) of this section.

(b) *Introduction*—(1) *Purpose.* (i) The water solubility of a chemical is defined as the equilibrium concentration of the chemical in a saturated aqueous solution at a given temperature and pressure. The aqueous phase solubility is an important factor in governing the movement, distribution, and rate of degradation of chemicals in the environment. Substances that are relatively water soluble are more likely to be widely distributed by the hydrologic cycle than those which are relatively insoluble. Furthermore, substances with higher water solubility are more likely to undergo microbial or chemical degradation in the environment because dissolution makes them ''available'' to interact and, therefore, react with other chemicals and microorganisms. Both the extent and rate of degradation via hydrolysis, photolysis, oxidation, reduction, and biodegradation depend on a chemical being soluble in water (i.e., homogeneous kinetics).

(ii) Water provides the medium in which many organisms live, and water is a major component of the internal environment of all living organisms (except for dormant stages of certain life forms). Even organisms which are adapted to life in a gaseous environment require water for normal functioning. Water is thus the medium through which most other chemicals are transported to and into living cells. As a result, the extent to which chemicals dissolve in water will be a major determinant for movement through the environment and entry into living systems.

(iii) The water solubility of a chemical also has an effect on its sorption into and desorption from soils and sediments, and on volatilization from aqueous media. The more soluble a chemical substance is, the less likely it is to sorb to soils and sediments and the less likely it is to volatilize from water. Finally, the design of most chemical tests and many ecological and health tests requires precise knowledge of the water solubility of the chemical to be tested.

(2) *Definitions.* The following definitions apply to this section.

Concentration (C) of a solution is the amount of solute in a given amount of

solvent or solution and can be expressed as a weight/weight or weight/volume relationship. The conversion from a weight relationship to one of volume incorporates density as a factor. For dilute aqueous solutions, the density of the solvent is approximately equal to the density of the solution; thus, concentrations expressed in milligrams per liter (mg/L) are approximately equal to 10^{-3} g/10^{3} g or parts per million (ppm); those expressed in micrograms per liter (µg/L) are approximately equal to 10^{-6} g/10^{3} g or parts per billion (ppb). In addition, concentration can be expressed in terms of molarity, normality, molality, and mole fraction. For example, to convert from weight/volume to molarity molecular mass is incorporated as a factor.

Density is the mass of a unit volume of a material. It is a function of temperature, hence the temperature at which it is measured should be specified. For a solid, it is the density of the impermeable portion rather than the bulk density. For solids and liquids, suitable units of measurement are grams per cubic centimeter (g/cm^3). The density of a solution is the mass of a unit volume of the solution and suitable units of measurement are g/cm^3.

Extractor column is used to extract the solute from the saturated solutions produced by the generator column. After extraction onto a chromatographic support, the solute is eluted with a solvent/water mixture and subsequently analyzed by high-pressure liquid chromatography (HPLC), gas chromatography (GC), or any other suitable analytical procedure. A detailed description of the preparation of the extractor column is given in paragraph (c)(1)(i)(D) of this section.

Generator column is used to produce or generate saturated solutions of a solute in a solvent. The column, see figure 1 in paragraph (c)(1)(i)(A) of this section, is packed with a solid support coated with the solute, i.e., the organic compound whose solubility is to be determined. When water (the solvent) is pumped through the column, saturated solutions of the solute are generated. Preparation of the generator column is described in paragraph (c)(1)(i)(A) of this section.

Response factor (RF) is the solute concentration required to give a 1 unit area chromatographic peak or 1 unit output from the HPLC recording integrator at a particular recorder attenuation. The factor is required to convert from units of area to units of concentration. The determination of the RF is given in paragraph (c)(3)(ii)(B)(*2*) of this section.

Sample loop is a 1/16 inch (in) outer diameter (O.D.) (1.6 millimeter (mm)) stainless steel tube with an internal volume between 20 and 50 µL. The loop is attached to the sample injection valve of the HPLC and is used to inject standard solutions into the mobile phase of the HPLC when determining the RF for the recording integrator. The exact volume of the loop must be determined as described in paragraph (c)(3)(ii)(B)(*1*) of this section when the HPLC method is used.

Saturated solution is a solution in which the dissolved solute is in equilibrium with an excess of undissolved solute; or a solution in equilibrium such that at a fixed temperature and pressure, the concentration of the solute in the solution is at its maximum value and will not change even in the presence of an excess of solute.

Solution is a homogeneous mixture of two or more substances constituting a single phase.

(3) *Principle of the test method.* (i) This test method is based on the dynamic coupled column liquid chromatographic (DCCLC) technique for determining the aqueous solubility of organic compounds that was initially developed by May et al. (as described in the references listed in paragraphs (e)(5) and (e)(6) of this section), modified by DeVoe et al. (as described in the reference listed in paragraph (e)(1) of this section), and finalized by Wasik et al. (as described in the reference listed in paragraph (e)(11) of this section). The DCCLC technique utilizes a generator column, extractor column and HPLC coupled or interconnected to provide a continuous closed flow system. Saturated aqueous solutions of the test compound are produced by pumping water through the generator column that is packed with a solid support coated with the compound. The compound is extracted from

the saturated solution onto an extractor column, then eluted from the extractor column with a solvent/water mixture and subsequently analyzed by HPLC using a variable wavelength ultraviolet (UV) detector operating at a suitable wavelength. Chromatogram peaks are recorded and integrated using a recording integrator. The concentration of the compound in the effluent from the generator column, i.e., the water solubility of the compound, is determined from the mass of the compound (solute) extracted from a measured volume of water (solvent).

(ii) Since the HPLC method is only applicable to compounds that absorb in the UV, an alternate GC method, or any other reliable procedure (which must be approved by OPPTS), can be used for those compounds that do not absorb in the UV. In the GC method the saturated solutions produced in the generator column are extracted using an appropriate organic solvent that is subsequently injected into the GC, or any other suitable analytical device, for analysis of the test compound.

(4) *Reference chemicals.* Table 1 of this section lists the water solubilities at 25 °C for a number of reference chemicals as obtained from the scientific literature. The data from Wasik et al. (as described in the reference listed in paragraph (e)(11) of this section), Miller et al. and Tewari et al. (as described in the references listed in paragraphs (e)(7) and (e)(10) of this section, respectively) were obtained from the generator column method. The water solubilities data were also obtained from Mackay et al. and Yalkowski et al. (as described in the references listed in paragraphs (e)(4) and (e)(12) of this section, respectively) and other scientists by the conventional shake flask method. These data have been provided primarily so that the generator column method can be calibrated from time to time and to allow the chemical testing laboratory an opportunity to compare its results with those listed in table 1 of this section. The water solubility values at 25 °C reported by Yalkowski et al. are their preferred values and, in general, represent the best available water solubility data at 25 °C. The testing laboratory has the option of choosing its own reference chemicals, but references must be given to establish the validity of the measured values of the water solubility.

TABLE 1—WATER SOLUBILITIES AT 25 °C OF SOME REFERENCE CHEMICALS

Reference chemical	Water solubility (ppm at 25 °C)		
	Wasik (generator column method)	Yalkowski[1 5]	Other literature references
2-Heptanone	[2]4080	4300	[5]4330
1-Chlorobutane	[2]873	872.9	[7]666
Ethylbenzene	[2]187	208	[7]162
1,2,3-Trimethylbenzene	[2]65.5	75.2	[7]48.2
Biphenyl	[3 10]6.71	7.48	[8]6.62
Phenanthrene	[4]1.002	1.212	—
2,4,6-Trichlorobiphenyl	[3 10]0.226	0.225	[8]0.119
2,3,4,5-Tetrachlorobiphenyl	[3 10]0.0209	0.01396	[8]0.0192
Hexachlorobenzene	—	0.004669	[9]0.00996
2,3,4,5,6-Pentachlorobiphenyl	[3 10]0.00548	0.004016	[8]0.0068

[1] Preferred water solubility at 25 °C by Yalkowski et al. (1990) in paragraph (e)(12) of this section based on a critical review of all the experimental water solubility data published.
[2] Tewari et al. (1982) in paragraph (e)(10) of this section.
[3] Leifer et al. (1983) in paragraph (e)(3) of this section.
[4] May, Wasik, and Freeman (1978, 1978a) in paragraphs (e)(5) and (6) of this section.
[5] Yalkowski et al. (1990) in paragraph (e)(12) of this section.
[6] Hansch et al. (1968) in paragraph (e)(2) of this section.
[7] Sutton and Calder (1975) in paragraph (e)(9) of this section.
[8] Mackay et al. (1980) in paragraph (e)(4) of this section.
[9] The elution chromatographic method from Organization for Economic Cooperation and Development (OECD) (1981) in paragraph (e)(8) of this section.
[10] Miller et al. (1984) in paragraph (e)(7) of this section.

(5) *Applicability and specificity.* (i) Procedures are described in this section to determine the water solubility for liquid or solid compounds. The water solubility can be determined in very pure water, buffer solution for compounds

that reversibly ionize or protonate, or in artificial seawater as a function of temperature (i.e., in the range of temperatures of environmental concern). This section is not applicable to the water solubility of gases.

(ii) This section is designed to determine the water solubility of a solid or liquid test chemical in the range of 1 ppb to 5,000 ppm. For chemicals whose solubility is below 1 ppb, the water solubility should be characterized as ''less than 1 ppb'' with no further quantification. For solubilities greater than 5,000 ppm, the shake flask method should be used, see paragraph (e)(15) of this section.

(c) *Test procedure*—(1) *Test conditions*—(i) *Special laboratory equipment*—(A) *Generator column*. (*1*) Either of two different designs shall be used depending on whether the eluted aqueous phase is analyzed by HPLC in paragraph (c)(3)(ii) of this section or by solvent extraction followed by GC (or any other reliable quantitative) analysis of solvent extract in paragraph (c)(3)(iv) of this section. The design of the generator column is shown in the following figure 1:

FIGURE 1—GENERATOR COLUMN

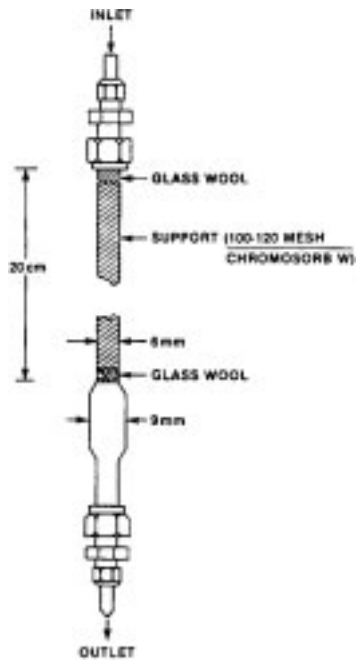

(*2*) The column consists of a 6 mm (¼ in) O.D. pyrex tube joined to a short enlarged section of 9 mm pyrex tubing which in turn is connected to another section of 6 mm (¼ in) O.D. pyrex tubing. Connections to the inlet teflon tubing (⅛ in O.D.) and to the outlet stainless steel tubing (1⁄16 in O.D.) shall be made by means of stainless steel fittings with teflon ferrules. The column is enclosed in a water jacket for temperature control as shown in the following figure 2:

FIGURE 2—SETUP SHOWING GENERATOR COLUMN ENCLOSED IN A WATER JACKET AND OVERALL ARRANGEMENT OF THE APPARATUS USED IN THE GC METHOD

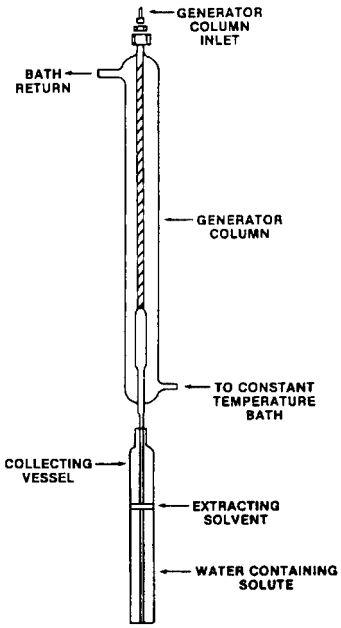

(B) Constant temperature bath with circulation pump-bath and capable of controlling temperature to ± 0.05 °C, see paragraph (c)(3) of this section.

(C) HPLC equipped with a variable wavelenth UV absorption detector operating at a suitable wavelength and a recording integrator in paragraph (c)(3)(ii) of this section.

(D) Extractor column—6.6 × 0.6 cm stainless steel tube with end fittings containing 5 µm frits filled with a superficially porous phase packing (Bondapack C^{18}/Corasil: Waters Associates) in paragraph (c)(3)(ii) of this section.

(E) Two 6-port high-pressure rotary switching valves in paragraph (c)(3)(ii) of this section.

(F) Collection vessel—8 × ¾ in section of pyrex tubing with a flat bottom connected to a short section of ⅜ in O.D. borosilicate glass tubing in figure 2 in paragraph (c)(1)(i)(A)(*2*) of this section. The collecting vessel is sealed with a ⅜ in teflon cap fitting in paragraph (c)(3)(iii) of this section.

(G) GC, or any other reliable analytical equipment, which has a detector sensitive to the solute of interest in paragraph (c)(3)(iii) of this section.

(ii) *Purity of water.* Water meeting appropriate American Society for Testing and Materials (ASTM) Type II standards, or an equivalent grade, are recommended to minimize the effects of dissolved salts and other impurities on water solubility. ASTM Type II water is presented in the reference listed in paragraph (e)(13) of this section.

(iii) *Purity of solvents.* All solvents used in this method must be reagent or HPLC grade. Solvents must contain no impurities which could interfere with the determination of the test compound.

(iv) *Seawater.* When the water solubility in seawater is desired, the artificial seawater described in paragraph (c)(2)(ii) of this section must be used.

(v) *Effect of pH on solubility.* For chemicals that reversibly ionize or protonate with a pK_a or pK_b between 3 and 11, experiments must be performed at pH's 5.0, 7.0, and 9.0 using appropriate buffers.

(2) *Preparation of reagents and solutions*—(i) *Buffer solutions.* Prepare buffer solutions as follows:

(A) pH 3.0—to 250 mL of 0.10M potassium hydrogen phosphate add 111 mL of 0.10 M hydrochloric acid; adjust the final volume to 500 mL with reagent grade water.

(B) pH 5.0—to 250 mL of 0.1M potassium hydrogen phthalate add 113 mL of 0.1M sodium hydroxide; adjust the final volume to 500 mL with reagent grade water.

(C) pH 7.0—to 250 mL of 0.1M potassium dihydrogen phosphate add 145 mL of 0.1M sodium hydroxide; adjust the final volume to 500 mL with reagent grade water.

(D) pH 9.0—to 250 mL of 0.075M borax add 69 mL of 0.1M HCl; adjust the final volume to 500 mL with reagent grade water.

(E) pH 11.0—to 250 mL of 0.05 M sodium bicarbonate add 3 mL of 0.10 M sodium hydroxide; adjust the final volume to 500 mL with reagent grade water.

(ii) Check the pH of each buffer solution with a pH meter at 25 °C and adjust to pH 5.0, 7.0, or 9.0, if necessary. If

the pH of the solution has changed by ±0.2 pH units or more after the addition of the test compound, then a more concentrated buffer is required for that pH determination. The sponsor should then choose a more suitable buffer.

(iii) *Artificial seawater.* Add the reagent-grade chemicals listed in table 2 of this section in the specified amounts and order to 890 mL of reagent-grade water. Each chemical shall be dissolved before another one is added.

TABLE 2—CONSTITUENTS OF ARTIFICIAL SEAWATER[1]

Chemical	Amount
NaF	3 mg
$SrCl_2.6H_2O$	20 mg
H_3BO_3	30 mg
KBr	100 mg
KCl	700 mg
$CaCl_2.2H_2O$	1.47 gram (g)
Na_2SO_4	4.00 g
$MgCl_2.6H_2O$	10.78 g
NaCl	23.50 g
$Na_2SiO_3.9H_2O$	20 mg
$NaHCO_3$	200 mg

[1] If the resulting solution is diluted to 1 L, the salinity should be 34±0.5 g/kilogram (kg) and the pH 8.0±0.2. The desired test salinity is attained by dilution at time of use.

(3) *Performance of the test.* Using either the procedures in paragraph (c)(3)(ii) or (c)(3)(iii) of this section, determine the water solubility of the test compound at 25 °C in reagent-grade water or buffer solution, as appropriate. Under certain circumstances, it may be necessary to determine the water solubility of a test compound at 25 °C in artificial seawater. The water solubility can also be determined at other temperatures of environmental concern by adjusting the temperature of the water bath to the appropriate temperature.

(i) Prior to the determination of the water solubility of the test chemical, two procedures shall be followed.

(A) The saturated aqueous solution leaving the generator column must be tested for the presence of an emulsion, using a Tyndall procedure. If colloids are present, they must be eliminated prior to the injection into the extractor column. This may be achieved by lowering the flow rate of the water.

(B) The efficiency of the removal of the solute (i.e. test chemical) by the solvent extraction from the extraction column must be determined and used in the determination of the water solubility of the test chemical.

(ii) *Procedure A—HPLC method*—(A) *Scope.* (*1*) Procedure A covers the determination of the aqueous solubility of compounds which absorb in the UV.

(*i*) The HPLC analytical system is shown schematically in the following figure 3:

FIGURE 3—SCHEMATIC OF HPLC—GENERATOR COLUMN FLOW SYSTEM

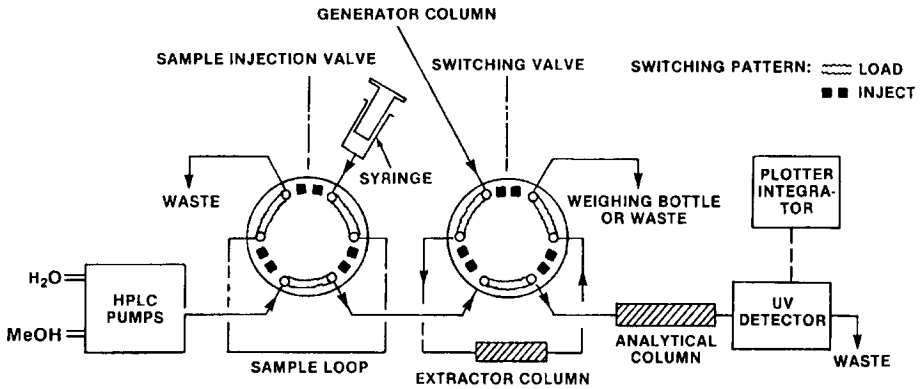

(*ii*) Two reciprocating piston pumps deliver the mobile phase (water or solvent/water mixture) through two 6-port high-pressure rotary valves and a 30 ×

0.6 cm C^{18}/Corasil analytical column to a variable wavelength UV absorption detector operating at a suitable wavelength; chromatogram peaks are recorded and integrated with a recording integrator. One of the 6-port valves is the sample injection valve used for injecting samples of standard solutions of the solute in an appropriate concentration for determining RFs of standard solutions of basic chromate for determining the sample-loop volume. The other 6-port valve in the system serves as a switching valve for the extractor column which is used to remove solute from the aqueous solutions.

(*2*) The general procedure for analyzing the aqueous phase is as follows (a detailed procedure is given in paragraph (c)(3)(ii)(B)(*4*) of this section).

(*i*) Direct the aqueous solution to ''Waste,'' see figure 3 in paragraph (c)(3)(ii)(A)(*1*)(*i*) of this section, with the switching valve in the inject position in order to equilibrate internal surfaces with the solution, thus ensuring that the analyzed sample would not be depleted by solute adsorption on surfaces upstream from the valve.

(*ii*) At the same time, water is pumped from the HPLC pumps in order to displace the solvent from the extractor column.

(*iii*) The switching valve is next changed to the load position to divert a sample of the solution through the extractor column, and the liquid leaving this column is collected in a weighing bottle. During this extraction step, the mobile phase is changed to a solvent/water mixture to condition the analytical column.

(*iv*) After the desired volume of sample is extracted, the switching valve is returned to the inject position for elution and analysis. Assuming that there is no breakthrough of solute from the extractor column during the extraction step, the chromatographic peak represents all of the solute in the sample, provided that the extraction efficiency is 100%. If the extraction efficiency is less than 100%, then the extraction efficiency shall be used to determine the actual weight of the solute extracted.

(*v*) The solute concentration in the aqueous phase is calculated from the peak area and the weight of the extracted liquid collected in the weighing bottle.

(B) *Determinations*—(*1*) *Sample-loop volume.* Accurate measurement of the sample loop may be accomplished by using the spectrophotometric method of Devoe et al. under paragraph (e)(1) of this section. For this method measure absorbance, A_{loop}, at 373 nm of at least three solutions, each of which is prepared by collecting from the sample valve an appropriate number, n, of loopfuls of an aqueous stock solution of K_2CrO_4 (1.3% by weight) and diluting to 50 mL with 0.2% KOH. (For a 20 µL loop, use n = 5; for a 50 µL loop, use n = 2.) Also measure the absorbance, A_{stock}, of the same stock solution after diluting 1:500 with 0.2% KOH. Calculate the loop volume to the nearest 0.1 µL using the equation:

Equation 1:

$$V_{loop} = \left(A_{loop} / A_{stock}\right)\left(10^{-4}/n\right)$$

(*2*) *RF.* (*i*) For all determinations adjust the mobile phase solvent/water ratio and flow rate to obtain a reasonable retention time on the HPLC column. For example, typical concentrations of solvent in the mobile phase range from 50 to 100% while flow rates range from 1 to 3 mL/min; these conditions give a 3 to 5 min retention time.

(*ii*) Prepare standard solutions of known concentrations of the solute in a suitable solvent. Concentrations must give a recorder response within the maximum response of the detector. Inject samples of each standard solution into the HPLC system using the calibrated sample loop. Obtain an average peak area from at least three injections of each standard sample at a set absorbance unit full scale (AUFS), *i.e.*, at the same absorbance scale attenuation setting.

(*iii*) Calculate the RF from the following equation:

Equation 2:

$$\text{Response Factor (RF)} = \frac{\text{Concentration mol/L}}{(\text{Average Area})\,(\text{AUFS})}$$

(*3*) *Loading of the generator column.* (*i*) The design of the generator column was described in paragraph (c)(1)(i) of this section and is shown in figure 1 in paragraph (c)(1)(i)(A) of this section. To pack the column, a plug of silanized glass wool is inserted into one end of the 6 mm pyrex tubing. Silanized diatomaceous silica support (about 0.5g 100–120 mesh Chromosorb (W) chromatographic support material) is poured into the tube with tapping and retained with a second plug of silanized glass wool.

(*ii*) If the solute is a liquid, the column is loaded by pulling the liquid solute through the dry support with gentle suction. If the solute is a solid, a 1% solution of the solid in a volatile solvent is added to the dry packing. The solvent is then distilled off the column under reduced pressure. After loading the column draw water up through the column to remove entrapped air.

(*4*) *Analysis of the solute.* Use the following procedure to collect and analyze the solute.

(*i*) With the switching valve (figure 3 in paragraph (c)(3)(ii)(A)(*1*)(*i*) of this section) in the inject position (i.e., water to waste), pump water through the generator column at a flow rate of approximately 1 mL/min for approximately 5 minutes (min) to bring the system into equilibrium. Pump water to the generator column by means of a minipump or pressurized water reservoir as shown in the following figure 4:

FIGURE 4—WATER RESERVOIR FOR GC METHOD

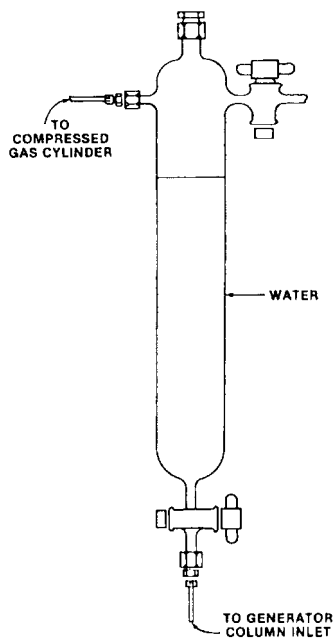

(*ii*) Flush out the solvent that remains in the system from previous runs by changing the mobile phase to 100% H_2O and allowing the water to reach the HPLC detector, as indicated by a negative reading. As soon as this occurs, place a 25 mL weighing bottle (weighed to the nearest mg) at the waste position and immediately turn the switching valve to the load position.

(*iii*) Collect an amount of water (as determined by trial and error) in the weighing bottle, corresponding to the amount of solute adsorbed by the extractor column that gives a large on-

scale detector response. During this extraction step, switch back to the original HPLC mobile phase composition, i.e., solvent/water mixture, to condition the HPLC analytical column.

(*iv*) After the desired volume of sample has been extracted, turn the switching valve back to the inject position (figure 3 in paragraph (c)(3)(ii)(A)(*1*)(*i*) of this section); at the same time turn on the recording integrator. The solvent/water mobile phase will elute the solute from the extractor column and transfer the solute to the HPLC analytical column.

(*v*) Remove the weighing bottle, cap it, and replace it with the waste container. Determine the weight of water collected to the nearest mg and record the corresponding peak area. Using the same AUFS setting repeat the analysis of the solute at least two more times and determine the average ratio of peak area to grams of water collected. In this equation, s = solubility (M), RF = response factor, V_{loop} = sample-loop volume (L), and R = ratio of area to grams of water. Calculate the solute solubility in water using the following equation:

Equation 3:

$$s = (997\ g/L)(RF)(V_{loop})(AUFS)(R)$$

(iii) *Procedure B—GC method*— (A) *Scope.* In the GC method, or any other analytical method, aqueous solutions from the generator column enter a collecting vessel (figure 2 in paragraph (c)(1)(i)(A)(*2*) of this section) containing a known weight of extracting solvent which is immiscible in water. The outlet of the generator column is positioned such that the aqueous phase always enters below the extracting solvent. After the aqueous phase is collected, the collecting vessel is stoppered and the quantity of aqueous phase is determined by weighing. The solvent and the aqueous phase are equilibrated by slowly rotating the collecting vessel. The extraction efficiency of the solvent must be determined at this time. A small amount of the extracting solvent is removed and injected into a gas chromograph equipped with an appropriate detector. The solute concentration in the aqueous phase is determined from a calibration curve constructed using known concentrations of the solute.

(B) *Alternative method.* If another (approved) analytical method is used instead of the GC, that method shall be used to determine quantitatively the amount of solute present in the extraction solvent.

(C) *Determinations*—(*1*) *Calibration curve.* (*i*) Prepare solute standard solutions of concentrations covering the range of the solute solubility. Select a column and optimum GC operating conditions for resolution between the solute and solvent and the solute and extracting solvent. Inject a known volume of each standard solution into the injection port of the GC. For each standard solution determine the average of the ratio R of peak area to volume (in microliters) for three chromatographic peaks from three injections.

(*ii*) After running all the standard solutions, determine the coefficients, a and b, using a linear regression equation of C vs. R in the following form:

Equation 4:

$$C = aR + b$$

(*iii*) If another analytical method is used, the procedures described in paragraph (c)(3)(iii)(C)(*1*) of this section shall be used to determine quantitatively the amount of solute in the extraction solvent.

(*2*) *Loading of the generator column.* The generator column is packed and loaded with solute in the same manner as for the HPLC method described under paragraph (c)(3)(ii)(B)(*3*) of this section. As shown in figure 2 in paragraph (c)(1)(i)(A)(*2*) of this section, attach approximately 20 cm of straight stainless steel tubing to the bottom of the generator column. Connect the top of the generator column to a water reservoir (figure 4 in paragraph (c)(3)(ii)(B)(*4*)(*i*) of this section) using teflon tubing. Use air or nitrogen pressure (5 PSI) from an air or nitrogen cylinder to force water from the reservoir through the column. Collect water in an Erlenmeyer flask for approximately 15 min while the solute concentration in water equilibrates;

longer time may be required for less soluble compounds.

(*3*) *Collection and extraction of the solute.* During the equilibration time, add a known weight of extracting solvent to a collection vessel which can be capped. The extracting solvent should cover the bottom of the collection vessel to a depth sufficient to submerge the collecting tube but still maintain 100:1 water/solvent ratio. Record the weight (to the nearest mg) of a collection vessel with cap and extracting solvent. Place the collection vessel under the generator column so that water from the collecting tube enters below the level of the extracting solvent (figure 2 in paragraph (c)(1)(i)(A)(*2*) of this section). When the collection vessel is filled, remove it from under the generator column, replace cap, and weigh the filled vessel. Determine the weight of water collected. Before analyzing for the solute, gently shake the collection vessel contents for approximately 30 min, controlling the rate of shaking so as not to form an emulsion; rotating the flask end over end five times per minute is sufficient.

(*4*) *Analysis of the solute.* (*i*) After shaking, allow the collection vessel to stand for approximately 30 min; then remove a known volume of the extracting solvent from the vessel using a microliter syringe and inject it into the GC. Record the ratio of peak area to volume injected and, from the regression equation of the calibration line, determine the concentration of solute in the extracting solvent. In this equation, C_{es} is the concentration of solute in extracting solvent (M), d_{H2O} and d_{es} are the densities of water and extracting solvent, respectively, and g_{es} and g_{H2O} are the grams of extracting solvent and water, respectively, contained in the collection vessel. The concentration of solute in water C(M) is determined from the following equation:

Equation 5:

$$C(M) = (C_{es})\left[\left(d_{H_2O}/d_{es}\right)\right]\left[\left(g_{es}/g_{H_2O}\right)\right]$$

(*ii*) Make replicate injections from each collecting vessel to determine the average solute concentration in water for each vessel. To make sure the generator column has reached equilibrium, run at least two additional (for a total of three) collection vessels and analyze the extracted solute as described above. Calculate the water solubility of the solute from the average solute concentration in the three vessels.

(iv) *Modification of procedures for potential problems.* If the test compound decomposes in one or more of the aqueous solvents required during the period of the test at a rate such that an accurate value for water solubility cannot be obtained, then it will be necessary to carry out detailed transformation studies; e.g., hydrolysis in paragraph (e)(16) of this section. If decomposition is due to aqueous photolysis, then it will be necessary to carry out water solubility studies in the dark, under red or yellow lights, or by any other suitable method to eliminate this transformation process.

(d) *Data and reporting*—(1) *Test report.* (i) For each set of conditions, (e.g., temperature, pure water, buffer solution, artificial seawater) required for the study, provide the water solubility value for each of three determinations, the mean value, and the standard deviation.

(ii) For compounds that decompose at a rate such that a precise value for the water solubility cannot be obtained, provide a statement to that effect.

(iii) For compounds with water solubility below 1 ppb, report the value as ''less than 1 ppb.''

(2) *Specific analytical, calibration, and recovery procedures.* (i) For the HPLC method describe and/or report:

(A) The method used to determine the sample-loop volume and the average and standard deviation of that volume.

(B) The average and standard deviation of the RF.

(C) Any changes made or problems encountered in the test procedure.

(ii) For the GC, or any other analytical, method report:

(A) The column and GC operating conditions of temperature and flow rate, or the operating conditions of any other analytical method used.

(B) The average and standard deviation of the average area per

microliter obtained for each of the standard solutions.

(C) The form of the regression equation obtained in the calibration procedure.

(D) The extracting solvent used, and its extraction efficiency.

(E) The average and standard deviation of solute concentration in each collection vessel.

(F) Any changes made or problems encountered in the test procedure.

(G) If applicable, a complete description of the analytical method which was used instead of the GC method.

(e) *References.* For additional information on this test guideline, the following references should be consulted. These references are available from the TSCA Nonconfidential Information Center, Rm. NE–B607, Environmental Protection Agency, 401 M St., SW., Washington, DC, 12 noon to 4 p.m., Monday through Friday, excluding legal holidays.

(1) DeVoe, H. et al., Generator columns and high pressure liquid chromatography for determining aqueous solubilities and octanol-water partition coefficients of hydrophobic substances. *Journal of Research, National Bureau of Standards,* 86:361–366 (1981).

(2) Hansch, C. et al., The linear free-energy relationship between partition coefficients, and the aqueous solubility of organic liquids. *Journal of Organic Chemistry* 33:347-350 (1968).

(3) Leifer, A. et al., Environmental transport and transformation of polychlorinated biphenyls. Chapter 1. U.S. Environmental Protection Agency Report: EPA-560/5–83–005 (1983).

(4) Mackay, D. et al., Relationships between aqueous solubility and octanol-water partition coefficient. *Chemosphere* 9:701-711 (1980).

(5) May, W.E. et al., Determination of the aqueous solubility of polynuclear aromatic hydrocarbons by a coupled column liquid chromatographic technique. *Analytical Chemistry* 50:175–179 (1978).

(6) May, W.E. et al. Determination of the solubility behavior of some polycyclic aromatic hydrocarbons in the water. *Analytical Chemistry,* 50:997–1000 (1978a).

(7) Miller, N.M. et al., Aqueous solubilities, octanol/water partition coefficients, and entropy of melting of chlorinated benzenes and biphenyls. *Journal of Chemical and Engineering Data* 29:184-190 (1984).

(8) OECD/Organization for Economic Cooperation and Development. Test Guideline No. 105. Water solubility column elution-flask method (1981).

(9) Sutton, C. and Calder, J.A., Solubility of alkylbenzenes in distilled water and seawater at 25 °C. *Journal of Chemical and Engineering Data* 20:320–322 (1975).

(10) Tewari, Y.B. et al., Aqueous solubility and octanol/water partition coefficient of organic compounds at 25 °C. *Journal of Chemical and Engineering Data* 27:451-454 (1982).

(11) Wasik, S.P. et al., Octanol/Water Partition Coefficient and Aqueous Solubilities of Organic Compounds. NBS Report NBSIR 81–2406. Washington, DC: National Bureau of Standards, U.S. Department of Commerce (1981).

(12) Yalkowski, S.H. et al., ''Aquasol database of aqueous solubilities of organic compounds''; Fifth Edition. University of Arizona, College of Pharmacy, Tucson, AZ 85721 (1990) (available at http://www.pharm.arizona.edu/aquasol/index.html).

(13) ASTM D 1193–91, *Standard Specification for Reagent Water.* American Society for Testing and Materials (ASTM). 1916 Race St., Philadelphia, PA 19103.

Subparts F–G [Reserved]

Subpart H—Health Effects Test Guidelines

SOURCE: 62 FR 43824, Aug. 15, 1997, unless otherwise noted.

§ 799.9110 TSCA acute oral toxicity.

(a) *Scope.* This section is intended to meet the testing requirements under section 4 of the Toxic Substances Control Act (TSCA). In the assessment and evaluation of the toxic characteristics of a substance, determination of acute oral toxicity is usually an initial step. It provides information on health hazards likely to arise from short-term exposure by the oral route. Data from an acute study may serve as a basis for classification and labeling. It is traditionally a step in establishing a dosage regimen in subchronic and other studies and may provide initial information on the mode of toxic action of a substance. An evaluation of acute toxicity data should include the relationship, if any, between the exposure of animals to the test substance and the incidence and severity of all abnormalities, including behavioral and clinical abnormalities, the reversibility of observed abnormalities, gross lesions, body weight changes, effects on mortality, and any other toxic effects.

(b) *Source.* The source material used in developing this TSCA test guideline is the Office of Prevention, Pesticides,

and Toxic Substances (OPPTS) harmonized test guideline 870.1100 (August 1998, final guideline). This source is available at the address in paragraph (f) of this section.

(c) *Definitions.* The following definitions apply to this section.

Acute oral toxicity is the adverse effects occurring within a short period of time after oral administration of either a single dose of a substance or multiple doses given within a 24–hour period.

Dosage is a general term comprising the dose, its frequency, and the duration of dosing.

Dose is the amount of test substance administered. Dose is expressed as weight of test substance (milligrams, grams) per unit weight of test animal (e.g., milligrams per kilogram).

Dose-effect is the relationship between the dose and the magnitude of a defined biological effect either in an individual or in a population sample.

Dose-response is the relationship between the dose and the proportion of a population sample showing a defined effect.

LD_{50} (median lethal dose) is a statistically derived estimate of single dose of a substance that can be expected to cause death in 50% of animals when administered by the oral route. The LD_{50} value is expressed in terms of weight of test substance per unit weight of test animal (milligrams per kilogram).

(d) *Alternative approaches to the determination of acute toxicity.* (1) EPA will accept the following procedures to reduce the number of animals used to evaluate acute effects of chemical exposure while preserving its ability to make reasoned judgments about safety:

(i) *Estimation of acute oral toxicity.* When further study is warranted, EPA generally supports limiting such tests to those using the lowest number of animals feasible. EPA will accept three alternative Organization for Economic Cooperation and Development (OECD) test methods in place of the ''traditional'' acute oral toxicity test. The three OECD alternatives are the following:

(A) The up and down procedure as described in OECD Guideline 425 referenced in paragraph (f)(4) of this section.

(B) The acute toxic class method as described in OECD Guideline 423 and referenced in paragraph (f)(6) of this section.

(C) The fixed dose method as described in OECD Guideline 420 and referenced in paragraph (f)(5) of this section.

(ii) *Limit test.* When data on structurally related chemicals are inadequate, a limit test may be considered. If rodents are used, a limit dose of at least 2,000 mg per kilogram of body weight may be administered to a single group of five males and five females using the procedures described in paragraph (e) of this section. If no lethality is demonstrated, no further testing for acute oral toxicity is needed. (Under current policy and regulations for pesticide products, precautionary statements may still be required unless there are data to indicate the LD_{50} is greater than 5,000 mg/kg.) If compound-related mortality is produced in the limit test, further study may need to be considered.

(2) [Reserved]

(e) *Conventional acute toxicity test*—(1) *Principle of the test method.* The test substance is administered orally by gavage in graduated doses to several groups of experimental animals, one dose being used per group. The doses chosen may be based on the results of a range finding test. Subsequently, observations of effects and deaths are made. Animals that die during the test are necropsied, and at the conclusion of the test the surviving animals are sacrificed and necropsied. This section is directed primarily to studies in rodent species but may be adapted for studies in nonrodents. Animals showing severe and enduring signs of distress and pain may need to be humanely sacrificed. Dosing test substances in a way known to cause marked pain and distress due to corrosive or irritating properties need not be carried out.

(2) *Substance to be tested.* Test, control, and reference substances are described in 40 CFR Part 792—Good Laboratory Practice Standards.

(3) *Test procedures*—(i) *Preparations.* Healthy young adult animals are acclimatized to the laboratory conditions

for at least 5 days prior to the test before the test animals are randomized and assigned to the treatment groups.

(ii) *Animal selection*—(A) *Species and strain.* Although several mammalian test species may be used, the rat is the preferred species. Commonly used laboratory strains must be employed. If another species is used, the tester must provide justification and reasoning for its selection.

(B) *Age.* Young adult rats between 8– and 12–weeks–old at the beginning of dosing should be used. Rabbits should be at least 12 weeks of age at study initiation. The weight variation of animals used in a test must be within 20% of the mean weight for each sex.

(C) *Number and sex of animals.* (*1*) At least five experimentally naive rodents are used at each dose level. They should all be of the same sex. After completion of the study in one sex, at least one group of five animals of the other sex is dosed to establish that animals of this sex are not markedly more sensitive to the test substance. The use of fewer animals may be justified in individual circumstances. Where adequate information is available to demonstrate that animals of the sex tested are markedly more sensitive, testing in animals of the other sex may be dispensed with. An acceptable option would be to test at least one group of five animals per sex at one or more dose levels to definitively determine the more sensitive sex prior to conducting the main study.

(*2*) The females must be nulliparous and nonpregnant.

(*3*) In acute toxicity tests with animals of a higher order than rodents, the use of smaller numbers should be considered.

(D) *Assignment of animals.* Each animal must be assigned a unique identification number. A system to assign animals to test groups and control groups randomly is required.

(E) *Housing.* Animals may be group-caged by sex, but the number of animals per cage must not interfere with clear observation of each animal. The biological properties of the test substance or toxic effects (e.g., morbidity, excitability) may indicate a need for individual caging.

(*1*) The temperature of the experimental animal rooms should be at 22±3 °C for rodents.

(*2*) The relative humidity of the experimental animal rooms should be 30 to 70%.

(*3*) Where lighting is artificial, the sequence should be 12–hours light/12–hours dark.

(*4*) For feeding, conventional laboratory diets may be used with an unlimited supply of drinking water.

(iii) *Dose levels and dose selection.* (A) Three dose levels must be used, spaced appropriately to produce test groups with a range of toxic effects and mortality rates. The data collected must be sufficient to produce a dose-response curve and permit an acceptable estimation of the LD_{50}. Range finding studies using single animals may help to estimate the positioning of dose groups so that no more than three dose levels will be necessary.

(B) *Limit test.* This test has been defined and described in paragraph (d)(1)(ii) of this section.

(C) *Vehicle.* Where necessary, the test substance is dissolved or suspended in a suitable vehicle. If a vehicle or diluent is needed, it should not elicit toxic effects itself nor substantially alter the chemical or toxicological properties of the test substance. It is recommended that wherever possible the use of an aqueous solution be considered first, followed by consideration of a solution in oil (e.g., corn oil), and then by consideration of possible solution in other vehicles. Toxic characteristics of non-aqueous vehicles should be known, and, if not known, should be determined before the test.

(D) *Volume.* The maximum volume of liquid that can be administered at one time depends on the size of the test animal. In rodents, the volume should not exceed 1 mL/100 g body weight, except when an aqueous solution is used in which case 2 mL/100 g may be administered. Either constant volume or constant concentration administration is acceptable when dosing, provided the following guidance is employed. When possible, the liquid test material should be dosed neat. Otherwise, it may be diluted, using the highest concentration possible, although volumes less than 0.5 mL per animal would not

be required. Lower dose volumes are acceptable if they can be accurately administered. Solid materials should be suspended or dissolved in the minimum amount of vehicle and dosed at the highest concentration possible.

(iv) *Exposure and exposure duration.* (A) Animals must be fasted prior to test substance administration. For the rat, feed should be withheld overnight; for other rodents with higher metabolic rates a shorter period of fasting is appropriate.

(B) The test substance must be administered in a single dose by gavage, using a stomach tube or suitable intubation cannula.

(C) If a single dose is not possible, the dose may be given in smaller fractions over a period not exceeding 24 hours. Where a dose is administered in fractions, it may be necessary to provide the animals with food and water, depending on the length of the dosing period.

(D) After the substance has been administered, feed may be withheld for an additional 3–4 hours.

(v) *Observation period.* Although 14 days is recommended as a minimum observation period, the duration of observation should not be fixed rigidly. It should be determined by the toxic reactions, rate of onset, and length of recovery period, and may thus be extended when considered necessary. The time at which signs of toxicity appear, their duration, and the time to death are important, especially if there is a tendency for deaths to be delayed.

(vi) *Observation of animals.* (A) A careful clinical examination must be made at least once each day.

(B) Additional observations must be made daily, especially in the early days of the study. Appropriate actions should be taken to minimize loss of animals to the study (e.g., necropsy or refrigeration of those animals found dead and isolation of weak or moribund animals).

(C) Observations must be detailed and carefully recorded, preferably using explicitly defined scales. Observations should include, but not be limited to, evaluation of skin and fur, eyes and mucous membranes, respiratory and circulatory effects, autonomic effects such as salivation, central nervous system effects, including tremors and convulsions, changes in the level of activity, gait and posture, reactivity to handling or sensory stimuli, altered strength, and stereotypies or bizarre behavior (e.g., self-mutilation, walking backwards).

(D) Individual weights of animals must be determined shortly before the test substance is administered, weekly thereafter, and at death. Changes in weights should be calculated and recorded when survival exceeds 1 day.

(E) The time of death should be recorded as precisely as possible.

(vii) *Gross pathology.* (A) At the end of the test, surviving animals must be weighed and sacrificed.

(B) A gross necropsy must be performed on all animals under test. All gross pathology changes should be recorded.

(C) If necropsy cannot be performed immediately after a dead animal is discovered, the animal should be refrigerated (not frozen) at temperatures low enough to minimize autolysis. Necropsies should be performed as soon as practicable, normally within a day or two.

(viii) *Additional evaluation.* Microscopic examination of organs showing evidence of gross pathology in animals surviving 24 hours or more should also be considered because it may yield useful information.

(ix) *Data and reporting*—(A) *Treatment of results.* Data must be summarized in tabular form, showing for each test group the number of animals at the start of the test, body weights, time of death of individual animals at different dose levels, number of animals displaying other signs of toxicity, description of toxic effects, and necropsy findings. Any methods used for calculation of the LD_{50} or any other parameters should be specified and referenced. Methods for parameter estimation are described in the references listed in paragraphs (f)(1), (f)(2), and (f)(3) of this section.

(B) *Evaluation of results.* An evaluation should include the relationship, if any, between exposure of the animals to the test substance and the incidence and severity of all abnormalities, including behavioral and clinical abnormalities, gross lesions, body weight

changes, effects on mortality, and any other toxic effects. The LD_{50} value should always be considered in conjunction with the observed toxic effects and any necropsy findings. The LD_{50} value is a relatively coarse measurement, useful only as a reference value for classification and labeling purposes, and for an expression of the lethal potential of the test substance by the ingestion route. Reference should always be made to the experimental animal species in which the LD_{50} value was obtained.

(C) *Test report.* In addition to the reporting requirements specified under EPA Good Laboratory Practice Standards at 40 CFR part 792, subpart J, the following specific information must be reported. The test report shall include:

(*1*) Species, strain, sex, and source of test animals.

(*2*) Method of randomization in assigning animals to test and control groups.

(*3*) Rationale for selection of species, if other than that recommended.

(*4*) Tabulation of individual and test group data by sex and dose level (e.g., number of animals exposed, number of animals showing signs of toxicity and number of animals that died or were sacrificed during the test).

(*i*) Description of toxic effects, including their time of onset, duration, reversibility, and relationship to dose.

(*ii*) Body weights.

(*iii*) Time of dosing and time of death after dosing.

(*iv*) Dose-response curves for mortality and other toxic effects (when permitted by the method of determination).

(*v*) Gross pathology findings.

(*vi*) Histopathology findings and any additional clinical chemistry evaluations, if performed.

(*5*) Description of any pretest conditioning, including diet, quarantine and treatment for disease.

(*6*) Description of caging conditions including: Number (or change in number) of animals per cage, bedding material, ambient temperature and humidity, photoperiod, and identification of diet of test animals.

(*7*) Manufacturer, source, purity, and lot number of test substance.

(*8*) Relevant properties of substance tested including physical state and pH (if applicable).

(*9*) Identification and composition of any vehicles (e.g., diluents, suspending agents, and emulsifiers) or other materials used in administering the test substance.

(*10*) A list of references cited in the body of the report. References to any published literature used in developing the test protocol, performing the testing, making and interpreting observations, and compiling and evaluating the results.

(f) *References.* For additional background information on this test guideline, the following references should be consulted. These references are available for inspection at the TSCA Nonconfidential Information Center, Rm. NE–B607, Environmental Protection Agency, 401 M St., NW., Washington, DC, 12 noon to 4 p.m., Monday through Friday, except legal holidays.

(1) Chanter, D.O. and Heywood, R. The LD_{50} Test: Some Considerations of Precision. *Toxicology Letters* 10:303–307 (1982).

(2) Finney, D.J. Chapter 3—Estimation of the median effective dose and Chapter 4—Maximum likelihood estimation, *Probit Analysis*, 3rd ed. Cambridge, London (1971).

(3) Finney, D.J. The Median Lethal Dose and Its Estimation. *Archives of Toxicology* 56:215–218 (1985).

(4) Organization for Economic Cooperation and Development. OECD Guidelines for the Testing of Chemicals. OECD Guideline 425: Acute Oral Toxicity: Up-and-Down Procedure, Approved: June 1998.

(5) Organization for Economic Cooperation and Development. OECD Guidelines for Testing of Chemicals. Guideline 420: Acute Oral Toxicity—Fixed Dose Method, Adopted: July 17, 1992.

(6) Organization for Economic Cooperation and Development. OECD Guidelines for Testing of Chemicals. Guideline 423: Acute Oral Toxicity—Acute Toxic Class Method, Adopted: March 22, 1996.

(7) Organization for Economic Cooperation and Development. OECD Guidelines for Testing of Chemicals. Guideline 401: Acute Oral Toxicity, Adopted: February 24, 1987.

[65 FR 78771, Dec. 15, 2000]

§ 799.9120 TSCA acute dermal toxicity.

(a) *Scope.* This section is intended to meet the testing requirements under section 4 of the Toxic Substances Control Act (TSCA). In the assessment and evaluation of the toxic characteristics

of a substance, determination of acute dermal toxicity is useful where exposure by the dermal route is likely. It provides information on health hazards likely to arise from short-term exposure by the dermal route. Data from an acute study may serve as a basis for classification and labeling. It is an initial step in establishing a dosage regimen in subchronic and other studies and may provide information on dermal absorption and the mode of toxic action of a substance by this route. An evaluation of acute toxicity data should include the relationship, if any, between the exposure of animals to the test substance and the incidence and severity of all abnormalities, including behavioral and clinical abnormalities, the reversibility of observed abnormalities, gross lesions, body weight changes, effects on mortality, and any other toxic effects.

(b) *Source.* The source material used in developing this TSCA test guideline is the Office of Prevention, Pesticides, and Toxic Substances (OPPTS) harmonized test guideline 870.1200 (August 1998, final guideline). This source is available at the address in paragraph (f) of this section.

(c) *Definitions.* The following definitions apply to this section.

Acute dermal toxicity is the adverse effects occurring within a short time of dermal application of a single dose of a substance or multiple doses given within a 24–hour period.

Dosage is a general term comprising the dose, its frequency and the duration of dosing.

Dose is the amount of test substance applied. Dose is expressed as weight of test substance (grams, milligrams) per unit weight of test animal (e.g., milligrams per kilogram).

Dose-effect is the relationship between the dose and the magnitude of a defined biological effect either in an individual or in a population sample.

Dose-response is the relationship between the dose and the proportion of a population sample showing a defined effect.

LD_{50} (median lethal dose), dermal, is a statistically derived estimate of a single dose of a substance that can be expected to cause death in 50% of treated animals when applied to the skin. The LD_{50} value is expressed in terms of weight of test substance per unit weight of test animal (milligrams per kilogram).

(d) *Approaches to the determination of acute toxicity.* (1) EPA recommends the following means to reduce the number of animals used to evaluate acute effects of chemical exposure while preserving its ability to make reasonable judgments about safety:

(i) Using data from substantially similar mixtures. In order to minimize the need for animal testing, the Agency encourages the review of existing acute toxicity information on mixtures that are substantially similar to the mixture under investigation. In certain cases it may be possible to glean enough information to make preliminary hazard evaluations that may reduce the need for further animal testing.

(ii) *Limit test.* When data on structurally related chemicals are inadequate, a limit test may be considered. If rodents are used, a limit dose of at least 2,000 mg/kg bodyweight may be administered to a single group of five males and five females using the procedures described in paragraph (e) of this section. If no lethality is demonstrated, no further testing for acute dermal toxicity is needed. If compound-related mortality is produced, further study may need to be considered.

(2) [Reserved]

(e) *Conventional acute toxicity test*—(1) *Principle of the test method.* The test substance is applied dermally in graduated doses to several groups of experimental animals, one dose being used per group. The doses chosen may be based on the results of a range finding test. Subsequently, observations of effects and deaths are made. Animals that die during the test are necropsied, and at the conclusion of the test the surviving animals are sacrificed and necropsied. This section is directed primarily to studies in either rats, rabbits, or guinea pigs but may be adapted for studies in other species. Animals showing severe and enduring signs of distress and pain may need to be humanely sacrificed. Dosing test substances in a way known to cause

marked pain and distress due to corrosive or irritating properties need not be carried out.

(2) *Substance to be tested.* Test, control, and reference substances are discussed in 40 CFR Part 792—Good Laboratory Practice Standards.

(3) *Test procedures*—(i) *Preparations.* Healthy young adult animals are acclimatized to the laboratory conditions for at least 5 days prior to the test before the test animals are randomized and assigned to the treatment groups.

(ii) *Animal selection*—(A) *Species and strain.* The rat, rabbit, or guinea pig may be used. The albino rabbit is preferred because of its size, ease of handling, skin permeability, and extensive data base. Commonly used laboratory strains must be employed. If a species other than rats, rabbits, or guinea pigs is used, the tester must provide justification and reasoning for its selection.

(B) *Age.* Young adult animals, rats between 8– and 12–weeks–old, rabbits at least 12–weeks–old, and guinea pigs between 5– and 6–weeks–old at the beginning of dosing should be used. The weight variation of animals used in a test must be within 20% of the mean weight for each sex.

(C) *Number and sex of animals.* (*1*) At least five experimentally naive animals with healthy intact skin are used at each dose level. They should all be of the same sex. After completion of the study in one sex, at least one group of five animals of the other sex is dosed to establish that animals of this sex are not markedly more sensitive to the test substance. The use of fewer animals may be justified in individual circumstances. Where adequate information is available to demonstrate that animals of the sex tested are markedly more sensitive, testing in animals of the other sex may be dispensed with. An acceptable option would be to test at least one group of five animals per sex at one or more dose levels to definitively determine the more sensitive sex prior to conducting the main study.

(*2*) The females must be nulliparous and nonpregnant.

(*3*) In acute toxicity tests with animals of a higher order than those mentioned above, the use of smaller numbers should be considered.

(D) *Assignment of animals.* Each animal must be assigned a unique identification number. A system to randomly assign animals to test groups and control groups is required.

(E) *Housing.* Animals should be housed in individual cages.

(*1*) The temperature of the experimental animal rooms should be at 22±3 °C for rodents, 20±3 °C for rabbits.

(*2*) The relative humidity of the experimental animal rooms should be 30 to 70%.

(*3*) Where lighting is artificial, the sequence should be 12–hours light/12–hours dark.

(*4*) For feeding, conventional laboratory diets may be used with an unlimited supply of drinking water.

(iii) *Dose levels and dose selection.* (A) Three dose levels must be used and spaced appropriately to produce test groups with a range of toxic effects and mortality rates. The data must be sufficient to produce a dose-response curve and permit an acceptable estimation of the median lethal dose. Range finding studies using single animals may help to estimate the positioning of the dose groups so that no more than three dose levels will be necessary.

(B) *Limit test.* This test is described in paragraph (d)(2)(ii) of this section.

(C) *Vehicle.* Solids should be pulverized when possible. The test substance should be moistened sufficiently with water or, where necessary, a suitable vehicle to ensure good contact with skin. If a vehicle or diluent is needed, it should not elicit toxic effects itself nor substantially alter the chemical or toxicological properties of the test substance. In addition, the influence of the vehicle on penetration of skin by the test substance should be taken into account. It is recommended that wherever possible the use of an aqueous solution be considered first, followed by consideration of a solution in oil (e.g., corn oil), and then by consideration of possible solution in other vehicles. For nonaqueous vehicles the toxic characteristics of the vehicle should be known, and if not known should be determined before the test. Acceptable alternative vehicles include gum arabic, ethanol and water, carboxymethyl cellulose, glycerol, propylene glycol,

PEG vegetable oil, and mineral oil as long as the vehicle is not irritating and the inability to use water or saline is justified in the report.

(iv) *Exposure and exposure duration.* The test substance must be administered over a period of 24 hours.

(v) *Preparation of animal skin.* Fur must be clipped from the dorsal area of the trunk of the test animals. Shaving may be employed, but it should be carried out at least 24 hours before dosing. Care must be taken to avoid abrading the skin, which would alter its permeability.

(vi) *Application of test substance.* (A) The test substance must be applied uniformly over a shaved or clipped area which is approximately 10% of the body surface area. The area starting at the scapulae (shoulders) to the wing of the ileum (hip bone) and half way down the flank on each side of the animal should be shaved or clipped. Liquid test materials should be undiluted if possible. With highly toxic substances, the surface area covered may be less, but as much of the area as possible should be covered with as thin and uniform a film as practical. The test material is not removed until 24 hours after application. In the case where less than 10% of the surface area is covered an approximation of the exposed areas should be determined.

(B) The test substance must be held in contact with the skin with a porous gauze dressing (<8 ply) and nonirritating tape throughout a 24–hour exposure period. The test site must be further covered in a suitable manner to retain the gauze dressing and test substance and ensure that the animals cannot ingest the test substance. Restrainers may be used to prevent the ingestion of the test substance, but complete immobilization is not a recommended method. Although a semiocclusive dressing is preferred, an occlusive dressing will also be acceptable.

(C) At the end of the exposure period, residual test substance should be removed where practicable using water or an appropriate solvent.

(vii) *Observation period.* Although 14 days is recommended as a minimum observation period, the duration of observation should not be fixed rigidly. It should be determined by the toxic reactions, rate of onset, and length of recovery period, and may thus be extended when considered necessary. The time at which signs of toxicity appear, their duration, and the time to death are important, especially if there is a tendency for deaths to be delayed.

(viii) *Observation of animals.* (A) A careful clinical examination must be made at least once each day.

(B) Additional observations must be made daily, especially in the early days of the study. Appropriate actions should be taken to minimize loss of animals to the study (e.g., necropsy or refrigeration of those animals found dead and isolation of weak or moribund animals).

(C) Observations must be detailed and carefully recorded, preferably using explicitly defined scales. Observations should include, but not be limited to, evaluation of skin and fur, eyes and mucous membranes, respiratory and circulatory effects, autonomic effects such as salivation, central nervous system effects, including tremors and convulsions, changes in the level of activity, gait and posture, reactivity to handling or sensory stimuli, altered strength, and stereotypies or bizarre behavior (*e.g.*, self-mutilation, walking backwards).

(D) Individual weights of animals must be determined shortly before the test substance is administered, weekly thereafter, and at death. Changes in weights should be calculated and recorded when survival exceeds one day.

(E) The time of death should be recorded as precisely as possible.

(ix) *Gross pathology.* (A) At the end of the test, surviving animals must be weighed and sacrificed.

(B) A gross necropsy must be performed on all animals under test. All gross pathology changes should be recorded.

(C) If necropsy cannot be performed immediately after a dead animal is discovered, the animal should be refrigerated (not frozen) at temperatures low enough to minimize autolysis. Necropsies should be performed as soon as practicable, normally within a day or two.

(x) *Additional evaluations.* Microscopic examination of organs showing

evidence of gross pathology in animals surviving 24 hours or more should also be considered because it may yield useful information.

(xi) *Data and reporting*—(A) *Treatment of results.* Data must be summarized in tabular form, showing for each test group the number of animals at the start of the test, body weights, time of death of individual animals at different dose levels, number of animals displaying other signs of toxicity, description of toxic effects and necropsy findings. Any methods used for calculation of the LD_{50} or any other parameters should be specified and referenced. Methods for parameter estimation are described in the references listed in paragraphs (f)(1), (f)(2), and (f)(3) of this section.

(B) *Evaluation of results.* An evaluation should include the relationship, if any, between exposure of the animals to the test substance and the incidence and severity of all abnormalities, including behavioral and clinical abnormalities, gross lesions, body weight changes, effects on mortality, and any other toxic effects. The LD_{50} value should always be considered in conjunction with the observed toxic effects and any necropsy findings. The LD_{50} value is a relatively coarse measurement, useful only as a reference value for classification and labeling purposes, and for an expression of the lethal potential of the test substance by the dermal route. Reference should always be made to the experimental animal species in which the LD_{50} value was obtained.

(C) *Test report.* In addition to the reporting requirements specified under EPA Good Laboratory Practice Standards at 40 CFR part 792, subpart J, the following specific information must be reported. The test report must include:

(*1*) Species, strain, sex, and source of test animals.

(*2*) Method of randomization in assigning animals to test and control groups.

(*3*) Rationale for selection of species, if other than that recommended.

(*4*) Tabulation of individual and test group data by sex and dose level (*e.g.*, number of animals exposed, number of animals showing signs of toxicity and number of animals that died or were sacrificed during the test).

(*i*) Description of toxic effects, including their time of onset, duration, reversibility, and relationship to dose.

(*ii*) Body weights.

(*iii*) Time of dosing and time of death after dosing.

(*iv*) Dose-response curves for mortality and other toxic effects (when permitted by the method of determination).

(*v*) Gross pathology findings.

(*vi*) Histopathology findings and any additional clinical chemistry evaluations, if performed.

(*5*) Description of any pre-test conditioning, including diet, quarantine and treatment for disease.

(*6*) Description of caging conditions including: Number (or change in number) of animals per cage, bedding material, ambient temperature and humidity, photoperiod, and identification of diet of test animals.

(*7*) Manufacturer, source, purity, and lot number of test substance.

(*8*) Relevant properties of substance tested including physical state and pH (if applicable).

(*9*) Identification and composition of any vehicles (e.g., diluents, suspending agents, and emulsifiers) or other materials used in administering the test substance.

(*10*) A list of references cited in the body of the report. References to any published literature used in developing the test protocol, performing the testing, making and interpreting observations, and compiling and evaluating the results.

(f) *References.* For additional background information on this test guideline, the following references should be consulted. These references are available for inspection at the TSCA Nonconfidential Information Center, Rm. NE–B607, Environmental Protection Agency, 401 M St., NW., Washington, DC, 12 noon to 4 p.m., Monday through Friday, except legal holidays.

(1) Chanter, D.O. and Heywood, R., The LD_{50} Test: Some Considerations of Precision, *Toxicology Letters* 10:303–307 (1982).

(2) Finney, D.J. Chapter 3—Estimation of the median effective dose and Chapter 4-Maximum likelihood estimation, *Probit Analysis*, 3rd ed. Cambridge, London (1971).

(3) Finney, D.J. The Median Lethal Dose and Its Estimation. *Archives of Toxicology* 56:215–218 (1985).

(4) Organization for Economic Cooperation and Development. OECD Guideline for the Testing of Chemicals. OECD Guideline 425: Acute Oral Toxicity: Up-and-Down Procedure. Adopted: September 21, 1998.

(5) Organization for Economic Cooperation and Development. OECD Guidelines for Testing of Chemicals. Guideline 420: Acute Oral Toxicity—Fixed Dose Method. Adopted: July 17, 1992.

(6) Organization for Economic Cooperation and Development. OECD Guidelines for Testing of Chemicals. Guideline 423: Acute Oral Toxicity—Acute Toxic Class Method. Adopted: March 22, 1996

(7) Organization for Economic Cooperation and Development. OECD Guidelines for Testing of Chemicals. Guideline 402: Acute Dermal Toxicity. Adopted: February 24, 1987.

[65 FR 78774, Dec. 15, 2000]

§ 799.9130 TSCA acute inhalation toxicity.

(a) *Scope.* This section is intended to meet testing requirements under section 4 of the Toxic Substances Control Act (TSCA). Determination of acute toxicity is usually an initial step in the assessment and evaluation of the toxic characteristics of a substance that may be inhaled such as a gas, volatile substance, or aerosol/particle. It provides information on health hazards likely to arise from short-term exposure by the inhalation route. Data from an acute study may serve as a basis for classification and labeling. It is traditionally a step in establishing a dosage regimen in subchronic and other studies and may provide initial information on the mode of toxic action of a substance. An evaluation of acute toxicity data should include the relationship, if any, between the animals' exposure to the test substance and the incidence and severity of all abnormalities, including behavioral and clinical abnormalities, the reversibility of observed abnormalities, gross lesions, body weight changes, effects on mortality, and any other toxic effects.

(b) *Source.* The source material used in developing this TSCA test guideline is the harmonized Office of Prevention, Pesticides, and Toxic Substances (OPPTS) test guideline 870.1300 (August 1998, final guideline). These sources are available at the address in paragraph (g) of this section.

(c) *Definitions.* The definitions in section 3 of TSCA and the definitions in 40 CFR Part 792—Good Laboratory Practice Standards apply to this section. The following definitions also apply to this section.

Acute inhalation toxicity is the adverse effect caused by a substance following a single uninterrupted exposure by inhalation over a short period of time (24 hours or less) to a substance capable of being inhaled.

Aerodynamic equivalent diameter is defined as the diameter of a unit-density sphere having the same terminal settling velocity as the particle in question, whatever its size, shape, and density. It is used to predict where in the respiratory tract such particles may be deposited.

Concentration is expressed as weight of the test substance per unit volume of air, e.g., milligrams per liter.

Geometric standard deviation (GSD) is a dimensionless number equal to the ratio between the mass median aerodynamic diameter (MMAD) and either 84% or 16% of the diameter size distribution (*e.g.*, MMAD = 2 m; 84% = 4 m; GSD = 4/2 = 2.0.) The MMAD, together with the GSD, describe the particle size distribution of an aerosol. Use of the GSD may not be valid for nonlognormally distributed aerosols. (If the size distribution deviates from the lognormal, it shall be noted).

Inhalable diameter refers to that aerodynamic diameter of a particle which is considered to be inhalable for the organism under study. It is used to refer to particles which are capable of being inhaled and deposited anywhere within the respiratory tract .

LC_{50} (median lethal concentration) is a statistically derived estimate of a concentration of a substance that can be expected to cause death during exposure or within a fixed time after exposure in 50% of animals exposed for a specified time. The LC_{50} value is a relatively coarse measurement useful only for classification and labeling purposes and an expression of the lethal potential of the test substance following inhalation. The LC_{50} value is expressed as weight of test substance per unit volume of air (milligrams per

liter) or parts per million. For clarity, the exposure duration and test animal species should also be specified, *e.g.*, 4 hours LC_{50} in F344.

Mass median aerodynamic diameter (MMAD) is the median aero-dynamic diameter and, along with the geometric standard deviation, is used to describe the particle size distribution of any aerosol statistically, based on the weight and size of the particles. Fifty percent of the particles by weight will be smaller than the median diameter and 50% of the particles will be larger.

(d) *Approaches to the determination of acute toxicity*. (1) EPA recommends the following means to reduce the number of animals used to evaluate acute effects of chemical exposure while preserving its ability to make reasonable judgments about safety:

(i) Using data from substantially similar mixtures. In order to minimize the need for animal testing, the Agency encourages the review of existing acute toxicity information on mixtures that are substantially similar to mixtures under investigation. In certain cases, it may be possible to get enough information to make preliminary hazard evaluations that may reduce the need for further animal testing.

(ii) Limit test. When data on structurally related chemicals are inadequate, a limit test may be considered. In the limit test, a single group of five males and five females is exposed to 2 mg/L for 4 hours, or where this is not possible due to physical or chemical properties of the test substance, the maximum attainable concentration where a particle size distribution having an MMAD between 1 and 4 µm cannot be maintained, using the procedures described under paragraph (e) of this section. For fibers, the bivariate distribution of length and diameter must ensure inhalability. For gases and vapors, the concentrations need not be greater than 50,000 ppm or 50% of the lower explosive limit, whichever is lower. If a test at an aerosol or particulate exposure of 2 mg/L (actual concentration of respirable substance) for 4 hours or, where this is not feasible, the maximum attainable concentration, using the procedures described for this study, produces no observable toxic effects, then a full study using three concentrations will not be necessary. Similarly, if a test at a gas or vapor exposure of 50,000 ppm or 50% of the lower explosive limit, whichever is lower, produces no observable toxic effects, then a full study using three concentrations will not be necessary.

(2) [Reserved]

(e) *Conventional acute toxicity test*—(1) *Principle of the test method*. Several groups of experimental animals are exposed to the test substance in graduated concentrations for a defined period, one concentration being used per group. When a vehicle other than water is used to help generate an appropriate concentration of the substance in the atmosphere, a vehicle control group should be used when historical data are not available or adequate to determine the acute inhalation toxicity of the vehicle. Subsequently, observations of effects and death are made. Animals that die during the test are necropsied and at the conclusion of the test surviving animals are sacrificed and necropsied. This guideline is directed primarily to studies in rodent species but may be adapted for studies in non-rodents. Animals showing severe and enduring signs of distress and pain may need to be sacrificed. Dosing test substances in a way known to cause marked pain and distress due to corrosive or irritating properties need not be carried out.

(2) *Substance to be tested*. Test, control, and reference substances are discussed under EPA Good Laboratory Practice Standards at 40 CFR part 792, subpart f.

(3) *Test procedures*—(i) *Preparation*. Healthy young adult animals are acclimatized to the laboratory conditions for at least 5 days prior to the test. Before the test, animals are randomized and assigned to the required number of groups.

(ii) *Animal selection*—(A) *Species and strain*. (*1*) Although several mammalian test species may be used, the preferred species is the rat. Commonly used laboratory strains should be employed. If another mammalian species is used, the investigator should provide justification and reasoning for the selection.

(*2*) *Health Status*. Body weight and feed consumption are not sufficient indicators of the health status of animals

prior to initiating an inhalation toxicity study. Prior to initiating the study, animals must be monitored for known viral and bacterial respiratory pathogens determined by conventional microbiological assays (e.g., serology). The animals must be free from pathogens at the start of exposure.

(B) *Age.* Young adult rats between 8–12 weeks old at the beginning of dosing, should be used. The weight variation in animals or between groups used in a test should not exceed ± 20% of the mean weight of each sex.

(C) *Number of animals and sex.* (*1*) At least five experimentally naive animals are used at each concentration and they must be of one sex. After completion of the study in one sex, at least one group of five animals of the other sex is exposed to establish that animals of this sex are not markedly more sensitive to the test substance. The use of fewer animals may be justified in individual circumstances. Where adequate information is available to demonstrate that animals of the sex tested are markedly more sensitive, testing in animals of the other sex is not required. An acceptable option would be to test at least one group of five animals per sex at one or more dose levels to definitively determine the more sensitive sex prior to conducting the main study.

(*2*) Females must be nulliparous and nonpregnant.

(*3*) In acute toxicity tests with animals of a higher order than rodents, the use of fewer animals per concentration group should be considered.

(D) *Assignment of animals.* (*1*) Each animal must be assigned a unique identification number. A system to assign animals to test groups and control groups randomly is required.

(*2*) Control groups. A concurrent untreated control group is not necessary. Where a vehicle other than water is used to generate an appropriate concentration of the test substance in the atmosphere and historical data are not available or adequate to determine the acute toxicity of the vehicle, a vehicle control group must be used. The vehicle control group must be a sham-treated group. Except for treatment with the test substance, animals in the vehicle control group must be handled in a manner identical to the test-group animals.

(E) *Housing.* The animals may be group-caged by sex, but the number of animals per cage must not interfere with clear observation of each animal. The biological properties of the test substance or toxic effects (e.g., morbidity, excitability) may indicate a need for individual caging. Animals must be housed individually in inhalation chambers during exposure to aerosols.

(*1*) Before and after exposure, the temperature of the animal room should be 22 ± 3 °C and the relative humidity 30–70%.

(*2*) Where lighting is artificial, the sequence should be 12 hours light/12 hours dark.

(*3*) For feeding, conventional laboratory diets may be used with an unlimited supply of drinking water.

(F) *Inhalation equipment.* (*1*) Animals can be exposed to the substance by either a nose-only procedure or in a whole-body exposure chamber. Maintenance of slight negative pressure inside the chamber will prevent leakage of the test substance into the surrounding areas. The nose-only exposure procedure is recommended for studies of aerosols to minimize exposures confounding resultant from test substance ingestion due to test animal fur licking following exposures. Animals must be acclimated to the nose-only exposure chamber prior to study and heat stress minimized during testing.

(*2*) *Inhalation chambers.* The animals must be tested in inhalation equipment designed to sustain a dynamic airflow for nose-only exposures of at least 300 ml/minute/animal or an airflow for whole-body exposures of at least 12 to 15 air changes per hour and ensure an adequate oxygen content of at least 19% and an evenly distributed exposure atmosphere. Where a whole-body chamber is used, its design must minimize crowding by providing individual caging. As a general rule, to ensure stability of a chamber atmosphere, the total ''volume'' of the test animals should not exceed 5% of the volume of the test chamber.

(*3*) *Environmental conditions.* The temperature at which the test is performed must be maintained at 22 °C (± 2 °C).

Ideally, the relative humidity should be maintained between 40% and 60%, but in certain instances (e.g., tests using water as a vehicle), this may not be practical.

(G) *Physical measurements.* Measurements or monitoring must be made of the following:

(*1*) Chemical purity of the test material must be analyzed. If the test substance is present in a mixture, the mass and composition of the entire mixture, as well as the principal compound, must be measured. If there is some difficulty in measuring chamber analytical concentration due to precipitation, nonhomogeneous mixtures, volatile components, or other factors, additional analyses of components may be necessary.

(*2*) The rate of air flow should be monitored continuously, and must be recorded at least every 30 minutes during the exposure period.

(*3*) The actual concentrations of the test substance must be measured in the breathing zone. During the exposure period, the actual concentrations of the test substance must be held as constant as practicable, monitored continuously or intermittently depending on the method of analysis, and recorded at least three times (*i.e.*, at the beginning, at an intermediate time, and at the end) during the exposure period. Chamber concentration may be measured using gravimetric or analytical methods as appropriate. If trial run measurements are reasonably consistent (± 10% for liquid aerosol, gas, or vapor; ± 20% for dry aerosol), then a minimum of two measurements are sufficient. If measurements are not consistent, then a minimum of four measurements should be taken.

(*4*) During the development of the generating system, particle size analysis must be performed to establish the stability of aerosol concentrations. During exposure, analysis should be conducted as often as necessary to determine the consistency of particle size distribution. The MMAD particle size range should be between 1–4 µm. The particle size of hygroscopic materials must be small enough when dry to assure that the size of the swollen particle will still be within the 1–4 µm MMAD range. Characterization for fibers must include the bivariate distribution of length and diameter; this distribution must ensure inhalability. Measurements of aerodynamic particle size in the animal's breathing zone must be measured during a trial run. If MMAD values for each exposure level are within 10% of each other, then a minimum of two measurements during the exposures should be sufficient. If pretest measurements are not within 10% of each other, then a minimum of four measurements should be taken.

(*5*) Temperature and humidity must be monitored continuously, and must be recorded at least every 30 minutes.

(iii) *Exposure duration and concentration levels.* (A) Exposure duration. Shortly before exposure, the animals are weighed and then exposed to the test target concentration in the designated apparatus for 4 hour exposure period after equilibration of the chamber concentrations. The target concentration is defined by an average of 5% for gases and vapors and 15% for particles and aerosols. The animals are weighed again at the conclusion of the exposure period to determine body weight change. Other durations may be needed to meet specific requirements. Food must be withheld during exposure. Water may also be withheld in certain circumstances.

(B) *Exposure concentration levels.* At least three concentration levels and a vehicle control group, if required (see paragraph (e)(3)(ii)(D)(*2*) of this section), must be used. The concentration levels should be spaced appropriately to produce a concentration-response curve and permit an estimation of the median lethal concentration (LC_{50}). The concentrations can either be linearly or logarithmically spaced depending on the anticipated steepness of the concentration-response curve. A rationale for concentration selection should be provided to indicate that the selected concentrations will maximally support detection of concentration-response relationship. The high concentration should be clearly toxic or a limit concentration, but should not result in an incidence of fatalities that would preclude a meaningful evaluation of the data. The lowest concentration should define a no-observed-effects level (NOEL). Range-finding studies

using single animals may help to estimate the positioning of the test groups so that no more than three concentration levels will be necessary.

(C) When the physical and chemical properties of the test substance show a low flash point or the test substance is otherwise known or thought to be explosive, care must be taken to avoid exposure level concentrations that could result in an exposure chamber explosion during the test.

(iv) *Observation period*. The observation period must be at least 14 days. However, the duration of observation should not be fixed rigidly. It should be determined by the toxic reactions, rate of onset, and length of recovery period, and thus may be extended when considered necessary. The time at which signs of toxicity appear, the duration of the signs observed, and the time of death must be recorded and are important, especially if there is a tendency for delayed effects.

(v) *Observation of animals*. (A) A careful clinical examination must be made at least once each day.

(B) Additional observations should be made daily with appropriate actions taken to minimize loss of animals to the study, e.g., necropsy or refrigeration of those animals found dead and isolation of weak or moribund animals.

(C) Observations must be detailed and carefully recorded, preferably using explicitly defined scales. Observations should include, but not be limited to, evaluation of skin and fur, eyes and mucous membranes, respiratory and circulatory effects, autonomic effects such as salivation, central nervous system effects, including tremors and convulsions, changes in the level of activity, gait and posture, reactivity to handling or sensory stimuli, altered strength, and stereotypies or bizarre behavior (e.g., self mutilation, walking backwards).

(D) Individual weights of animals must be determined pre-exposure and post-exposure, weekly after exposure, and at death. Changes in weights should be calculated and recorded when survival exceeds 1 day.

(E) The time of death should be recorded as precisely as possible.

(vi) *Gross pathology*. (A) At the end of the test, surviving animals must be weighed, sacrificed and a gross necropsy must be performed on all animals under test, with particular reference to any changes in the respiratory tract. All gross pathology changes must be recorded.

(*1*) The gross necropsy must include examination of orifices and the cranial, thoracic, and abdominal cavities, and contents.

(*2*) At least the lungs, liver, kidneys, adrenals, brain, and gonads should be weighed wet, as soon as possible after dissection to avoid drying.

(*3*) Optionally, the following organs and tissues, or representative samples thereof, may be preserved in a suitable medium for possible future histopathological examination: All gross lesions; brain-including sections of medulla/pons; cerebellar cortex and cerebral cortex; pituitary; thyroid/parathyroid; thymus; heart; sternum with bone marrow; salivary glands; liver; spleen; kidneys; adrenals; pancreas; gonads; accessory genital organs (epididymis, prostrate, and, if present, seminal vesicles); aorta; skin; gall bladder (if present); esophagus; stomach; duodenum; jejunum; ileum; cecum; colon; rectum; urinary bladder; representative lymph nodes; thigh musculature; peripheral nerve; spinal cord at three levels cervical, midthoracic, and lumbar; and eyes. Respiratory tract tissues should be perfusion preserved in a suitable medium.

(B) If necropsy cannot be performed immediately after a dead animal is discovered during the observation period, the animal should be refrigerated (not frozen) at temperatures low enough to minimize autolysis. Necropsies should be performed as soon as possible after death (normally within 24 to 48 hours).

(vii) *Additional evaluations*. In animals surviving 24 hours or more, microscopic examination of organs showing evidence of gross pathology should be considered since it may yield useful information on the nature of acute toxic effects.

(f) *Data and reporting*—(1) *Treatment of results*. Data must be summarized in tabular form showing for each test group the number of animals at the start of the test, body weights, time of death of individual animals at different

exposure levels, number of animals displaying other signs of toxicity, description of toxic effects and necropsy findings. The method used for calculation of the LC_{50} or any other parameters must be specified and referenced. Some acceptable methods for parameter estimation are described in the references described in paragraphs (g)(1), (g)(2), and (g)(3) of this section.

(2) *Evaluation of results.* The LC_{50} value should be considered in conjunction with the observed toxic effects and the necropsy findings. The evaluation should include the relationship, if any, between exposure of animals to the test substance and the incidence and severity of all abnormalities including behavioral and clinical abnormalities, gross lesions, body weight changes, mortality, and other toxic effects.

(3) *Test report.* In addition to the reporting requirements specified under EPA Good Laboratory Practice Standards at 40 CFR part 792, subpart J, the following specific information must be reported. The test report shall include:

(i) Test conditions. (A) Description of exposure apparatus including design, type, dimensions.

(B) Source of air, system for generating the test article as particle, aerosol, gas, or vapor.

(C) Method for conditioning air, equipment for measuring temperature, humidity, particle size or particulate aerosol concentration size, and actual concentration.

(D) Treatment of exhaust air and the method of housing the animals in a test chamber when this is used.

(ii) Exposure data. The exposure data must be tabulated and presented with mean values and a measure of variability (e.g., standard deviation) and should include:

(A) Chemical purity of the test material.

(B) Airflow rates through the inhalation equipment.

(C) Temperature and humidity of the air.

(D) Nominal concentration (total amount of test substance fed into the inhalation equipment divided by volume of air).

(E) Actual (analytical or gravimetric) concentration in test breathing zone.

(F) Particle size distribution (calculated MMAD and GSD) and the bivariate distribution of fiber length and diameter, where appropriate.

(G) Explanation as to why the desired chamber concentration and/or particle size could not be achieved (if applicable), and the efforts taken to comply with these aspects of this section.

(iii) Species, strain, sex, and source of test animals.

(iv) Method of randomization in assigning animals to test and control groups.

(v) Rationale for selection of species, if other than that recommended.

(vi) Results. Tabulation of individual and test group data by sex and exposure concentration level (e.g., number of animals exposed, number of animals showing signs of toxicity and number of animals that died or were sacrificed during the test).

(A) Description of toxic effects including time of onset, duration, reversibility, and relationship to the exposure concentration levels.

(B) Pre-exposure and post-exposure body weight change in animals, and weight change during the observation period.

(C) Time of dosing and time of death during or following exposure.

(D) Concentration-response curves for mortality and other toxic effects (when permitted by the method of determination).

(E) Gross pathology necropsy findings in the test animals and vehicle control animals, if included. Data must be tabulated to show the counts and incidence of gross alterations observed for each group tested and the number of animals affected by each type of lesion along with the location and frequency of each type of lesion.

(F) Histopathology findings and any additional evaluations (e.g., clinical chemistry), if performed.

(vii) Description of any pretest conditioning, including diet, quarantine and treatment for disease.

(viii) Description of caging conditions, including: number (or change in number) of animals per cage, bedding material, ambient temperature and humidity, photoperiod, and identification of diet of test animals.

(ix) Manufacturer (source), lot number, and purity of test substance.

(x) Identification and composition of any vehicles (e.g., diluents, suspending agents, and emulsifiers) or other materials , if used in administering the test substance.

(xi) A list of references cited in the body of the report. References to any published literature used in developing the test protocol, performing the testing, making and interpreting observations, and compiling and evaluating the results.

(g) *References.* For additional background information on this test guideline, the following references should be consulted. These references are available for inspection at the TSCA Nonconfidential Information Center, Rm. NE–B607, Environmental Protection Agency, 401 M St., NW., Washington, DC, 12 noon to 4 p.m., Monday through Friday, except legal holidays.

(1) Chanter, D.O. and Heywood, R. The L_{D50} test: some considerations of precision. *Toxicology Letters* 10:303 307 (1982).

(2) Finney, D.G. Chapter 3 Estimation of the median effective dose, Chapter 4 Maximum likelihood estimation. *Probit Analysis.* 3rd Ed. (Cambridge, London. (1971).

(3) Finney, D.J. The Median Lethal Dose and Its Estimation, *Archives of Toxicology* 56:215 218 (1985).

(4) Organization for Economic Cooperation and Development. OECD Guidelines for the Testing of Chemicals. Final Draft OECD Guideline 425: Acute Oral Toxicity: Up-and-Down Procedure to be adopted in the Tenth Addendum to the OECD Guidelines for the Testing of Chemicals.

(5) Organization for Economic Cooperation and Development. OECD Guidelines for Testing of Chemicals. Guideline 403: Acute Inhalation Toxicity. Adopted: May 12, 1981.

(6) Organization for Economic Cooperation and Development. OECD Guidelines for Testing of Chemicals. Guideline 420: Acute Oral Toxicity Fixed Dose Method. Adopted: July 17, 1992.

(7) Organization for Economic Cooperation and Development. OECD Guidelines for Testing of Chemicals. Guideline 423: Acute Oral Toxicity Acute Toxic Class Method. Adopted: March 22, 1996.

(8) U. S. EPA. Interim Policy for Particle Size and Limit Concentration Issues in Inhalation Toxicity Studies. 2/1/94. Health Effects Division, Office of Pesticide Programs.

[65 FR 78776, Dec. 15, 2000]

§ 799.9135 TSCA acute inhalation toxicity with histopathology.

(a) *Scope.* This section is intended to meet the testing requirements under section 4 of the Toxic Substances Control Act (TSCA). In the assessment and evaluation of the potential human health effects of chemical substances, it is appropriate to test for acute inhalation toxic effects. The goals of this test are to characterize the exposure-response relationship for sensitive endpoints following acute exposure and to characterize toxicologic response following acute high exposures. The latter is of particular concern in relation to spills and other accidental releases. This testing is designed to determine the gross pathology and histopathology resulting from acute inhalation exposure to a substance. Because toxic effects on the respiratory tract are of particular concern following inhalation exposure, several indicators of respiratory toxicity consisting of histopathology on fixed tissue and evaluation of cellular and biochemical parameters in bronchoalveolar lavage fluid should be employed. The respiratory histopathology consists of specialized techniques to preserve tissues of the respiratory tract in order to allow detailed microscopic examination to identify adverse effects of chemical substances on this organ system. The bronchoalveolar lavage is designed to be a rapid screening test to provide an early indicator of pulmonary toxicity by examining biochemical and cytologic endpoints of material from the lungs of animals exposed to potentially toxic chemical substances. These acute tests are designed to assess the relationship, if any, between the animals' exposure to the test substance and to demonstrate relationship between the animals' exposure and the incidence and severity of observed abnormalities, including gross or histopathologic lesions, body weight changes, effects on mortality, and any other toxic effects. These acute tests are not intended to provide a complete evaluation of the toxicologic effects of a substance, and additional functional and morphological evaluations may be necessary to assess completely the potential effects produced by a chemical

substance. Additional tests may include longer-term exposures, or more in-depth evaluation of specific organ systems as indicated by signs of toxicity following acute exposure.

(b) *Source.* This a new section developed by the United States Environmental Protection Agency.

(c) *Definitions.* The following definitions apply to this section.

Aerodynamic diameter (d_{ae}) refers to the size of particles. It is the diameter of a sphere of unit density that behaves aerodynamically (has the same settling velocity in air) as the particle of the test substance. It is used to compare particles of different size, shape, and density, and to predict where in the respiratory tract such particles may be primarily deposited.

Exposure response is the relationship between the exposure concentration and the measured toxic response, whether expressed as a group mean ± standard deviation) in the case of a continuous variable or as incidence in the case of a quantal variable. This definiton should not preclude the exploration of other dose metrics in establishing this relationship.

Geometric standard deviation (GSD) is a dimensionless number equal to the ratio between the mass median aerodynamic diameter (MMAD) and either 84% or 16% of the diameter size distribution (e.g., MMAD = 2 μm; 84% = 4 μm; GSD = 4/2 = 2.0.) The MMAD, together with the GSD, describe the particle size distribution of an aerosol. Use of the GSD may not be valid for non-lognormally distributed aerosols. (If the size distribution deviates from the lognormal, it shall be noted).

Inhalability is the ratio of the number concentration of particles of a certain aerodynamic diameter, d_{ae}, that are inspired through the nose or mouth to the number concentration of the same d_{ae} present in the inspired volume of ambient air. In humans, inhalability can exceed 15 μm d_{ae}, whereas inhalability dramatically decreases for particles above 4 μm d_{ae} in small laboratory animals.

Lower respiratory tract consists of those structures of the respiratory tract below the larynx.

Mass geometric mean aerodynamic diameter or the mass median aerodynamic diameter (MMAD) is the calculated aerodynamic diameter that divides the particles of an aerosol (a gaseous suspension of fine liquid or solid particles) in half, based on the weight of the particles. By weight, 50% of the particles will be larger than the MMAD and 50% of the particles will be smaller than the MMAD.

Particle regional deposition is the fraction of inhaled particles that deposits in the specific region of the respiratory tract. The major mechanisms of particle deposition in the respiratory tract include impaction, sedimentation, diffusion, interception, and electrostatic precipitation. The deposition mechanism that is dominant for a given region depends on the respiratory tract architecture and ventilation rate of the species and the aerosol particle size and distribution. The respiratory tract in both humans and various experimental mammals can be divided into three regions on the basis of structure, size, and function:

(1) The extrathoracic region or upper respiratory tract that includes the nose, mouth, nasopharynx, oropharynx, laryngopharynx, and larynx.

(2) The tracheobronchial region that includes the trachea, bronchi, and bronchioles (including the terminal bronchioles).

(3) The alveolar region that includes the respiratory bronchioles (if present in the species), alveolar ducts, alveolar sacs, and alveoli.

Respiratory effects are any adverse effects on the structure or functions of the respiratory system related to exposure to a chemical substance.

Target organ is any organ found to be a target of toxicity in the 4-hour (hr) high concentration group as a result of:

(1) The initial histopathologic examination (respiratory tract, liver, kidney, gross lesions); or

(2) The retrospective histopathologic examination of archived organs triggered by their identification as targets of toxicity in a 90-day study.

Toxic effects are any adverse changes (a change that is statistically and biologically significant) in the structure or function of an experimental animal as a result of exposure to a chemical substance.

Upper respiratory tract consists of those structures of the respiratory tract above and including the larynx.

(d) *Principle of the test method.* The test substance shall be administered to several groups of experimental animals; one concentration level and duration being used per group. Bronchoalveolar lavage shall be used to evaluate early effects on the respiratory system by examining changes in the content of the lavage fluid of the lung. At 24 hrs following exposure, the animals shall be sacrificed and necropsied, and tissue samples from the respiratory tract and other major organs will be prepared for microscopic examination. The exposure levels at which significant toxic effects on the respiratory organ system are produced are compared to those levels that produce other toxic effects. As triggered by the results of the 4-hr test, additional exposure periods of 1 hr and 8 hrs will be required to determine the effect of exposure time on the toxicity observed. A 1-hr exposure study can be elected as an option to provide data suitable for risk assessment for very short duration exposures as may occur from chemical releases. In the absence of adequate toxicological data for 1-hr exposure, the Agency will extrapolate to shorter-term exposures from the 4-hr data on the basis of concentration alone. This is a conservative method of extrapolation, consistent with general Agency methods for deriving criteria for short-term exposure from longer-term studies (a concentration x time extrapolation would result in higher concentration for a shorter duration).

(e) *Test procedures*—(1) *Animal selection*—(i) *Species.* In general, the laboratory rat and mouse should be used. Under some circumstances, other species, such as the hamster or guinea pig, may be more appropriate, and if these or other species are used, justification should be provided.

(ii) *Strain.* If rats and mice are used, the use of the F344 rat and the B6C3F1 mouse is preferred to facilitate comparison with existing data.

(iii) *Age.* Young adults shall be used. The weight variation of animals used in a test should not exceed ’ 61’ 20% of the mean weight for each species.

(iv) *Sex.* Equal numbers of animals of each sex shall be used for each concentration level. The females shall be nulliparous and nonpregnant.

(v) *Health status.* Body weight and feed consumption are not sufficient indicators of the health status of animals prior to initiating an inhalation toxicity study. Prior to initiating the study, animals shall be monitored for known viral and bacterial respiratory pathogens determined by conventional microbiological assays (e.g., serology). The animals shall be free from pathogens at the start of exposure.

(2) *Number of animals.* At least five males and five females shall be used in each concentration/duration and control group. Animals shall be randomly assigned to treatment and control groups.

(3) *Control groups.* The control group shall be a sham-treated group. Except for treatment with the test substance, animals in the control group shall be handled in a manner identical to the test-group animals. Where a vehicle is used to help generate an appropriate concentration of the substance in the atmosphere, a vehicle control group shall be used. If the 4- and 8-hr exposure studies are conducted concurrently, a concurrent 8-hr sham-exposed control group may serve as the control group for both the 4-hr and the 8-hr exposure studies, provided there is adequate historical control data showing no changes in histopathology or bronchoalveolar lavage of controls exposed for 4 and 8 hrs. Similarly, if the optional 1-hr exposure study is conducted concurrently with the 4- and/or 8-hr study, the concurrent control group for those studies may also be used for the 1-hr study, provided adequate historical control data show no changes in histopathology or bronchoalveolar lavage between controls exposed for these time periods.

(4) *Concentration level and concentration selection.* For the 4-hr study, at least three concentrations shall be used in addition to the control group. Ideally, the data generated from the test should be sufficient to produce an exposure-response curve. The concentrations can either be linearly or logarithmically spaced depending on

the anticipated steepness of the concentration-response curve. A rationale for concentration selection should be provided to indicate that the selected concentrations will maximally support detection of concentration-response relationship. The high concentration should be clearly toxic or a limit concentration, but should not result in an incidence of fatalities that would preclude a meaningful evaluation of the data. The lowest concentration should define a no-observed-adverse-effects level (NOAEL).

(i) *Limit concentration.* For aerosols and particles, the high concentrations need not be greater than 2 mg/L, or concentrations that cannot maintain a particle size distribution having an MMAD between 1 and 4 µm (i.e., a particle size that permits inhalability and deposition throughout the respiratory tract). For fibers, the bivariate distribution of length and diameter must ensure inhalability. For gases and vapors, the concentrations need not be greater than 50,000 ppm or 50% of the lower explosive limit, whichever is lower. If a test at an aerosol or particulate exposure of 2 mg/L (actual concentration of respirable substance) for 4 hrs or, where this is not feasible, the maximum attainable concentration, using the procedures described for this study, produces no observable toxic effects, then a full study using three concentrations will not be necessary. Similarly, if a test at a gas or vapor exposure of 50,000 ppm or 50% of the lower explosive limit, whichever is lower, produces no observable toxic effects, then a full study using three concentrations will not be necessary.

(ii) *8-hr study and optional 1-hr study.* If the 8-hr study is triggered, three concentrations shall be tested. These concentrations should allow for the determination of an effect level and a NOAEL. If the option to perform a 1-hr study is elected, three concentrations shall be selected and tested in a similar manner.

(5) *Inhalation exposure.* Animals can be exposed to the substance by either a nose-only procedure or in a whole-body exposure chamber.

(i) *Inhalation chambers.* The animals shall be tested in inhalation equipment designed to sustain a dynamic airflow for nose-only exposures of at least 300 ml/minute/animal or an airflow for whole-body exposures of at least 12 to 15 air changes per hr and ensure an adequate oxygen content of at least 19% and an evenly distributed exposure atmosphere. Where a whole-body chamber is used, its design shall minimize crowding by providing individual caging. As a general rule, to ensure stability of a chamber atmosphere, the total ''volume'' of the test animals should not exceed 5% of the volume of the test chamber.

(ii) *Environmental conditions.* The temperature at which the test is performed shall be maintained at 22 °C (±2 °C). Ideally, the relative humidity should be maintained between 40% and 60%, but in certain instances (e.g., tests using water as a vehicle), this may not be practical.

(iii) *Exposure periodicity.* For acute testing, the exposure design shall enable 4 hrs of exposure to the target concentrations, as defined by an average of ± 5% for gases and vapors and ± 15% for particles and aerosols. If triggered by the results of the 4-hr exposure, additional testing shall be conducted in a comparable manner using an 8-hr exposure period.

(6) *Physical measurements.* Measurements or monitoring shall be made of the following:

(i) Chemical purity of the test material shall be analyzed.

(ii) The rate of airflow shall be monitored continuously, but shall be recorded at least every 30 minutes.

(iii) The actual concentrations of the test substance shall be measured in the breathing zone. During the exposure period, the actual concentrations of the test substance shall be held as constant as practical, monitored continuously or intermittently depending on the method of analysis, and recorded at least at the beginning, at an intermediate time, and at the end of the exposure period. Well-established and published monitoring methods should be used where available. If no standard methods are available, then accuracy and precision information must be supplied.

(iv) During the development of the generating system, appropriate particle size analysis shall be performed to

establish the stability of the aerosol. During exposure, analysis should be conducted as often as necessary to determine the consistency of particle size distribution. The particle size distribution shall have an MMAD between 1 and 4 µm. The particle size of hygroscopic materials shall be small enough when dry to assure that the size of the particle at saturation will still have an MMAD between 1 and 4 µm. Characterization for fibers shall include the bivariate distribution of length and diameter; this distribution must ensure inhalability.

(v) If the test substance is present in a mixture, the mass and composition of the entire mixture, as well as the principal compound, shall be measured.

(vi) Temperature and humidity shall be monitored continuously, but shall be recorded at least every 30 minutes.

(7) *Food and water during exposure period.* Food shall be withheld during exposure. Water may also be withheld in certain cases.

(8) *Observation period.* The bronchoalveolar lavage and respiratory pathology shall be conducted 24 hrs following exposure to allow expression of signs of toxicity. There is concern that some latency time will be required to allow migration of cells and macromolecules into the lungs following exposure, and that some pathology may require macromolecular synthesis or degradation before cell damage develops.

(9) *Gross pathology.* (i) All animals shall be subjected to a full gross necropsy which includes examination of orifices and the cranial, thoracic, and abdominal cavities and their contents.

(ii) At least the lungs, liver, kidneys, adrenals, brain, and gonads shall be weighed wet, as soon as possible after dissection to avoid drying.

(iii) The following organs and tissues, or representative samples thereof, shall be preserved in a suitable medium for possible future histopathological examination: All gross lesions; brain-including sections of medulla/pons; cerebellar cortex and cerebral cortex; pituitary; thyroid/parathyroid; thymus; heart; sternum with bone marrow; salivary glands; liver; spleen; kidneys; adrenals; pancreas; gonads; accessory genital organs (epididymis, prostrate, and, if present, seminal vesicles); aorta; skin; gall bladder (if present); esophagus; stomach; duodenum; jejunum; ileum; cecum; colon; rectum; urinary bladder; representative lymph nodes; thigh musculature; peripheral nerve; spinal cord at three levels cervical, midthoracic, and lumbar; and eyes. Respiratory tract tissues shall also be preserved in a suitable medium.

(10) *Histopathology.* The following histopathology shall be performed:

(i) Full histopathology shall be performed on the respiratory tract, liver and kidney of all animals in the control and high concentration groups. The histopathology of the respiratory tract is described under paragraph (e)(11) of this section.

(ii) All gross lesions which differ from controls in frequency, distribution, type, or severity in all concentration groups.

(iii) Target organs in all animals, as indicated by the observations in the high concentration group in this study. Histopathologic examination of target organs in animals at all concentration levels (rather than only to the extent necessary to define the NOAEL) can support the application of exposure-response analyses such as the benchmark concentration approach.

(iv) Archived organs identified as targets of toxicity from results of the 90-day study (if a 90-day study is required for this substance) should be elevated in high concentration animals of the 4-hr acute study to determine if they are also targets of acute toxicity.

(11) *Respiratory tract histopathology.* (i) Representative sections of the respiratory tract shall be examined histologically. These shall include the trachea, major conducting airways, alveolar region, terminal and respiratory bronchioles (if present), alveolar ducts and sacs, and interstitial tissues.

(ii) Care shall be taken that the method used to kill the animal does not result in damage to the tissues of the upper or lower respiratory tract. The lungs shall be infused with a fixative while in an inflated state of fixed pressure.

(iii) The upper respiratory tract shall be examined for histopathologic lesions. This examination shall use a minimum of four sections located as

specified under paragraphs (e)(11)(iii)(A) through (e)(11)(iii)(D) of this section. An evaluation of the nasal vestibule shall be conducted. The method described by the reference under paragraph (h)(11) of this section should be given consideration. The use of additional sections shall be left to the discretion of the study pathologist, but consideration should be given to additional sections as recommended in the reference under paragraph (h)(8) of this section to ensure adequate evaluation of the entire upper respiratory tract, particularly the nasopharyngeal meatus. The following transverse sections shall be examined:

(A) Immediately posterior to the upper incisor teeth.

(B) At the incisor papilla.

(C) At the second palatal ridge.

(D) At the level of the first upper molar teeth.

(iv) The laryngeal mucosa shall be examined for histopathologic changes. Sections of the larynx to be examined include the epithelium covering the base of the epiglottis, the ventral pouch, and the medial surfaces of the vocal processes of the arytenoid cartilages.

(12) *Bronchoalveolar lavage.* (i) Animals can be exposed to the substance by either a nose-only procedure or in a whole-body exposure chamber.

(ii) Care should be taken that the method used to kill the animal results in minimum changes in the fluid of the lungs of the test animals.

(iii) At the appropriate time, the test animals shall be killed and the heart-lung including trachea removed in bloc. Alternatively, lungs can be lavaged in situ. If the study will not be compromised, one lobe of the lungs may be used for lung lavage while the other is fixed for histologic evaluation. The lungs should be lavaged using physiological saline. The lavages shall consist of two washes, each of which consists of approximately 80% (e.g., 5 ml in rats and 1 ml in mice) of the total lung volume. Additional washes merely tend to reduce the concentrations of the material collected. The lung lavage fluid shall be stored on ice at 5 °C until assayed.

(iv) The following parameters shall be determined in the lavage fluid as indicators of cellular damage in the lungs: total protein, cell count, and percent leukocytes. In addition, a phagocytosis assay shall be performed to determine macrophage activity. Assay methods described in the references under paragraphs (h)(1) and (h)(3) of this section may be used.

(13) *Combined protocol.* The tests described may be combined with any other toxicity study, as long as none of the requirements of either are violated by the combination.

(f) *Triggered testing.* If no adverse effects are seen in the 4-hr study as compared with controls, no further testing is necessary. If the 4-hr study shows positive effects in histopathology or the bronchoalveolar lavage, an 8-hr study shall be conducted. Only those tissues showing positive results in the 4-hr study must be pursued in the follow-up 8-hr study. Similarly, if the option to perform a 1-hr study is exercised, only those tissues showing positive results in the 4-hr study shall be pursued.

(g) *Data reporting and evaluation.* The final test report shall include the following information:

(1) *Description of equipment and test methods.* A description of the general design of the experiment and any equipment used shall be provided.

(i) Description of exposure apparatus, including design, type, dimensions, source of air, system for generating particles, aerosols, gasses, and vapors, method of conditioning air, treatment of exhaust air, and the method of housing animals in a test chamber.

(ii) Description of the equipment for measuring temperature, humidity, and particulate aerosol concentration and size.

(iii) Exposure data shall be tabulated and presented with mean values and measure of variability (e.g., standard deviation) and should include:

(A) Chemical purity of the test material.

(B) Airflow rates through the inhalation equipment.

(C) Temperature and humidity of air.

(D) Nominal concentration (total amount of test substance fed into the inhalation equipment divided by the volume of air).

(E) Actual concentration in test breathing zone.

(F) Particle size distribution (e.g., MMAD with GSD) and the bivariate distribution of fiber length and diameter, where appropriate.

(2) *Results*—(i) *General group animal data.* The following information shall be arranged by test group exposure level.

(A) Number of animals exposed.

(B) Number of animals dying.

(C) Number of animals showing overt signs of toxicity.

(D) Pre- and post-exposure body weight change in animals, and weight change during the observation period.

(ii) *Counts and incidence of gross alterations observed at necropsy in the test and control groups.* Data shall be tabulated to show:

(A) The number of animals used in each group and the number of animals in which any gross lesions were found.

(B) The number of animals affected by each different type of lesion, and the locations and frequency of each type of lesion.

(iii) *Counts and incidence of general histologic alterations in the test group.* Data shall be tabulated to show:

(A) The number of animals used in each group and the number of animals in which any histopathologic lesions were found.

(B) The number of animals affected by each different type of lesion, and the locations, frequency, and average grade of each type of lesion.

(iv) *Counts and incidence of respiratory histopathologic alterations by the test group.* Data shall be tabulated to show:

(A) The number of animals used in each group and the number of animals in which any histopathologic lesions were found.

(B) The number of animals affected by each different type of lesion, and the locations, frequency, and average grade of each type of lesion.

(v) *Results of the bronchoalveolar lavage study.* Data shall be tabulated to show:

(A) The amount of administered lavage fluid and recovered lavage fluid for each test animal.

(B) The magnitude of change of biochemical and cytologic indices in lavage fluids at each test concentration for each animal.

(C) Results shall be quantified as amount of constituent/mL of lavage fluid. This assumes that the amount of lavage fluid recovered is a representative sample of the total lavage fluid.

(3) *Evaluation of data.* The findings from this acute study should be evaluated in the context of preceding and/or concurrent toxicity studies and any correlated functional findings. The evaluation shall include the relationship between the concentrations of the test substance and the presence or absence, incidence, and severity of any effects. The evaluation should include appropriate statistical analyses, for example, parametric tests for continuous data and non-parametric tests for the remainder. Choice of analyses should consider tests appropriate to the experimental design, including repeated measures. The report must include concentration-response curves for the bronchoalveolar lavage and tables reporting observations at each concentration level for necropsy findings and gross, general, and respiratory system histopathology.

(h) *Reference.* For additional background information on this test guideline, the following references should be consulted. These references are available for inspection at the TSCA Nonconfidential Information Center, Rm. NE–B607, Environmental Protection Agency, 401 M St., SW., Washington, DC, 12 noon to 4 p.m., Monday through Friday, except legal holidays.

(1) Burleson, G.R., Fuller, L.B.;e nache, M.G., and Graham, J.A. Poly (I): poly (C)-enhanced alveolar peritoneal macrophage phagocytosis: Quantification by a new method utilizing fluorescent beads. *Proceedings of the Society of Experimental Biology and Medicine.* 184:468–476 (1987).

(2) Gardner, D.E., Crapo, J.D., and McClellan, R.O. (Eds.) *Toxicology of the Lung.* (Raven Press, New York, 1993) pp. i–xii, 1–30.

(3) Gilmour, G.I., and Selgrade, M.K. A comparison of the pulmonary defenses against streptococcal infection in rats and mice following O3 exposure: Differences in disease susceptibility and neutrophil recruitment. *Toxicology*

and Applied Pharmacology. 123:211–218 (1993).

(4) Henderson, R.F., Benson, J.M., Hahn, F.F., Hobbs, C.H., Jones, R.K., Mauderly, J.L., McClellan, R.O., and Pickrell, J.A. New approaches for the evaluation of pulmonary toxicity: Bronchoalveolar lavage fluid analysis. *Fundamental and Applied Toxicology*. 5:451–458 (1985).

(5) Henderson, R.F. Use of bronchoalveolar lavage to detect lung damage. *Environmental Health Perspectives*. 56:115–129 (1984).

(6) Henderson, R.F., Rebar, A.H., Pickrell, J.A., and Newton, G.J. Early damage indicators in the lung. III. Biochemical and cytological response of the lung to inhaled metal salts. *Toxicology and Applied Pharmacology*. 50:123–136 (1979).

(7) McClellan, R.O. and Henderson, R.F. (Eds.) Second edition. *Concepts in Inhalation Toxicology*. (Taylor and Francis, Washington, DC, 1995) pp.i–xxiv, 1–24, 441–470.

(8) Mery, S., Gross, E.A., Joyner, D.R., Godo, M., and Morgan, K.T. Nasal Diagrams: A Tool for Recording the Distribution of Nasal Lesions in Rats and Mice. *Toxicologic Pathology*. 22:353–372 (1994).

(9) Phalen, R.F. (Ed) *Methods in Inhalation Toxicology*. (CRC Press, Boca Raton, FL, 1997) pp. i–xii, 1–12.

(10) Renne, R.A., Gideon, K.M., Miller, R.A., Mellick, P.W., and Grumbein, S.L. Histologic methods and interspecies variations in the laryngeal histology of F344/N rats and B6C3F1 mice. *Toxicology and Pathology*. 20:44–51 (1992).

(11) Young, J.T. Histopathologic examination of the rat nasal cavity. *Fundamental and Applied Toxicology*. 1:309–312 (1981).

§ 799.9305 TSCA Repeated dose 28–day oral toxicity study in rodents.

(a) *Scope*—(1) *Applicability*. This section is intended to meet testing requirements of the Toxic Substances Control Act (TSCA) (15 U.S.C. 2601).

(2) *Source*. The source material used in developing this TSCA test guideline is the Office of Prevention, Pesticides and Toxic Substances (OPPTS) harmonized test guideline 870.3050 (July 2000, final guidelines). This source is available at the address in paragraph (h) of this section.

(b) *Purpose*. (1) In the assessment and evaluation of the toxic characteristics of a chemical, the determination of oral toxicity using repeated doses may be carried out after initial information on toxicity has been obtained by acute testing. This study provides information on the possible health hazards likely to arise from repeated exposure over a relatively limited period of time. The method comprises the basic repeated dose toxicity study that may be used for chemicals on which a 90–day study is not warranted (*e.g.*, when the production volume does not exceed certain limits) or as a preliminary to a long term study. The duration of exposure should normally be 28 days although a 14–day study may be appropriate in certain circumstances; justification for use of a 14–day exposure period should be provided.

(2) This section places emphasis on neurological effects as a specific endpoint, and the need for careful clinical observations of the animals, so as to obtain as much information as possible, is stressed. The method should identify chemicals with neurotoxic potential, which may warrant further indepth investigation of this aspect. In addition, the method may give an indication of immunological effects and reproductive organ toxicity.

(c) *Definitions*. The definitions in section 3 of TSCA and in 40 CFR Part 792—Good Laboratory Practice Standards apply to this section. The following definitions also apply to this section.

Dosage is a general term comprising of dose, its frequency and the duration of dosing.

Dose is the amount of test substance administered. Dose is expressed as weight (g, mg) or as weight of test substance per unit weight of test animal (e.g., mg/kg), or as constant dietary concentrations (parts per million (ppm)).

No-observed-effects level (NOEL) is the maximum dose used in a study which produces no adverse effects. The NOEL is usually expressed in terms of the weight of a test substance given daily per unit weight of test animals (milligrams per kilograms per day).

(d) *Principle of the test.* The test substance is orally administered daily in graduated doses to several groups of experimental animals, one dose level per group for a period of 28 days. During the period of administration the animals are observed closely, each day for signs of toxicity. Animals which die or are sacrificed during the test are necropsied and at the conclusion of the test surviving animals are sacrificed and necropsied.

(e) *Description of the method*—(1) *Selection of animal species.* The preferred rodent species is the rat, although other rodent species may be used. Commonly used laboratory strains of young healthy adult animals should be employed. The females should be nulliparous and non-pregnant. Dosing should begin as soon as possible after weaning and, in any case, before the animals are 9 weeks old. At the commencement of the study the weight variation of animals used should be minimal and not exceed ± 20% of the mean weight of each sex. Where a repeated dose oral study is conducted as a preliminary to a long term study, preferably animals from the same strain and source should be used in both studies.

(2) *Housing and feeding conditions.* The temperature in the experimental animal room should be 22 °C (± 3 °C). Although the relative humidity should be at least 30% and preferably not to exceed 70% other than during room cleaning, the aim should be 50–60%. Lighting should be artificial, the sequence being 12 hours light, 12 hours dark. For feeding, conventional laboratory diets may be used with an unlimited supply of drinking water. The choice of diet may be influenced by the need to ensure a suitable admixture of a test substance when administered by this method. Animals may be housed individually, or be caged in small groups of the same sex; for group caging, no more than five animals should be housed per cage.

(3) *Preparation of animals.* Healthy young adult animals must be randomly assigned to the control and treatment groups. Cages should be arranged in such a way that possible effects due to cage placement are minimized. The animals are identified uniquely and kept in their cages for at least 5 days prior to the start of the study to allow for acclimatization to the laboratory conditions.

(4) *Preparation of doses.* (i) The test compound must be administered by gavage or via the diet or drinking water. The method of oral administration is dependent on the purpose of the study, and the physical/chemical properties of the test material.

(ii) Where necessary, the test substance is dissolved or suspended in a suitable vehicle. It is recommended that, wherever possible, the use of an aqueous solution/suspension be considered first, followed by consideration of a solution/emulsion in oil (e.g., corn oil) and then by possible solution in other vehicles. For vehicles other than water the toxic characteristics of the vehicle must be known. The stability of the test substance in the vehicle should be determined.

(f) *Procedure*—(1)*Number and sex of animals.* At least 10 animals (five female and five male) should be used at each dose level. If interim sacrifices are planned, the number should be increased by the number of animals scheduled to be sacrificed before the completion of the study. Consideration should be given to an additional satellite group of 10 animals (five per sex) in the control and in the top dose group for observation of reversibility, persistence, or delayed occurrence of toxic effects, for at least 14 days post treatment.

(2) *Dosage.* (i) Generally, at least three test groups and a control group should be used, but if from assessment of other data, no effects would be expected at a dose of 1000 mg/kg bodyweight/per day, a limit test may be performed. If there are no suitable data available, a range finding study may be performed to aid the determination of the doses to be used. Except for treatment with the test substance, animals in the control group should be handled in an identical manner to the test group subjects. If a vehicle is used in administering the test substance, the control group should receive the vehicle in the highest volume used.

(ii) Dose levels should be selected taking into account any existing toxicity and (toxico-) kinetic data available for the test compound or related materials. The highest dose level

should be chosen with the aim of inducing toxic effects but not death or severe suffering. Thereafter, a descending sequence of dose levels should be selected with a view to demonstrating any dosage related response and NOEL at the lowest dose level. Two to four fold intervals are frequently optimal for setting the descending dose levels and addition of a fourth test group is often preferable to using very large intervals (e.g., more than a factor of 10) between dosages.

(3) *Limit test*. If a test at one dose level of at least 1000 mg/kg body weight/day or, for dietary or drinking water administration, an equivalent percentage in the diet, or drinking water (based upon body weight determinations), using the procedures described for this study, produces no observable toxic effects and if toxicity would not be expected based upon data from structurally related compounds, then a full study using three dose levels may not be considered necessary. The limit test applies except when human exposure indicates the need for a higher dose level to be used.

(4) *Administration of doses*. (i) The animals are dosed with the test substance daily 7 days each week for a period of 28 days; use of a 5–day per week dosing regime or a 14–day exposure period needs to be justified. When the test substance is administered by gavage, this should be done in a single dose to the animals using a stomach tube or a suitable intubation cannula. The maximum volume of liquid that can be administered at one time depends on the size of the test animal. The volume should not exceed 1ml/100g body weight, except in the case of aqueous solutions where 2ml/100g body weight may be used. Except for irritating or corrosive substances which will normally reveal exacerbated effects with higher concentrations, variability in test volume should be minimized by adjusting the concentration to ensure a constant volume at all dose levels.

(ii) For substances administered via the diet or drinking water it is important to ensure that the quantities of the test substance involved do not interfere with normal nutrition or water balance. When the test substance is administered in the diet either a constant dietary concentration (parts per million (ppm)) or a constant dose level in terms of the animals' body weight may be used; the alternative used must be specified. For a substance administered by gavage, the dose should be given at similar times each day, and adjusted as necessary to maintain a constant dose level in terms of animal body weight. Where a repeated dose study is used as a preliminary to a long term study, a similar diet should be used in both studies.

(5) *Observations*. (i) The observation period should be 28 days, unless the study duration is 14 days (see paragraph (b)(1) of this section). Animals in a satellite group scheduled for follow-up observations should be kept for at least a further 14 days without treatment to detect delayed occurrence, or persistence of, or recovery from toxic effects.

(ii) General clinical observations should be made at least once a day, preferably at the same time(s) each day and considering the peak period of anticipated effects after dosing. The health condition of the animals should be recorded. At least twice daily, all animals are observed for morbidity and mortality.

(iii) Once before the first exposure (to allow for within-subject comparisons), and at least once a week thereafter, detailed clinical observations should be made in all animals. These observations should be made outside the home cage in a standard arena and preferably at the same time, each time. They should be carefully recorded, preferably using scoring systems, explicitly defined by the testing laboratory. Effort should be made to ensure that variations in the test conditions are minimal and that observations are preferably conducted by observers unaware of the treatment. Signs noted should include, but not be limited to, changes in skin, fur, eyes, mucous membranes, occurrence of secretions and excretions and autonomic activity (e.g., lacrimation, piloerection, pupil size, unusual respiratory pattern). Changes in gait, posture and response to handling as well as the presence of clonic or tonic movements, stereotypies (e.g., excessive grooming,

repetitive circling) or bizarre behaviour (e.g., self-mutilation, walking backwards) should also be recorded.

(iv) In the fourth exposure week sensory reactivity to stimuli of different types (see paragraph (h)(2) of this section) (e.g., auditory, visual and proprioceptive stimuli), assessment of grip strength and motor activity assessment should be conducted. Further details of the procedures that could be followed are given in the respective references. However, alternative procedures than those referenced could also be used. Examples of procedures for observation are described in the references in paragraphs (h)(1), (h)(2), (h)(3), (h)(4), and (h)(5) of this section.

(v) Functional observations conducted in the fourth exposure week may be omitted when the study is conducted as a preliminary study to a subsequent subchronic (90–day) study. In that case, the functional observations should be included in this follow-up study. On the other hand, the availability of data on functional observations from the repeated dose study may enhance the ability to select dose levels for a subsequent subchronic study.

(vi) Exceptionally, functional observations may also be omitted for groups that otherwise reveal signs of toxicity to an extent that would significantly interfere with the functional test performance.

(6) *Body weight and food/water consumption*. All animals should be weighed at least once a week. Measurements of food consumption should be made at least weekly. If the test substance is administered via the drinking water, water consumption should also be measured at least weekly.

(7) *Hematology*. (i) The following hematological examinations should be made at the end of the test period: hematocrit, hemoglobin concentration, erythrocyte count, total and differential leukocyte count, platelet count and a measure of blood clotting time/potential.

(ii) Blood samples should be taken from a named site just prior to or as part of the procedure for sacrificing the animals, and stored under appropriate conditions.

(8) *Clinical Biochemistry*. (i) Clinical biochemistry determinations to investigate major toxic effects in tissues and, specifically, effects on kidney and liver, should be performed on blood samples obtained of all animals just prior to or as part of the procedure for sacrificing the animals (apart from those found moribund and/or intercurrently sacrificed). Overnight fasting of the animals prior to blood sampling is recommended.[1] Investigations of plasma or serum shall include sodium, potassium, glucose, total cholesterol, urea, creatinine, total protein and albumin, at least two enzymes indicative of hepatocellular effects (such as alanine aminotransferase, aspartate aminotransferase, alkaline phosphatase, gamma glutamyl transpeptidase, and sorbitol dehydrogenase). Measurements of additional enzymes (of hepatic or other origin) and bile acids may provide useful information under certain circumstances.

(ii) Optionally, the following urinalysis determinations could be performed during the last week of the study using timed urine volume collection; appearance, volume, osmolality or specific gravity, pH, protein, glucose and blood and blood cells.

(iii) In addition, studies to investigate serum markers of general tissue damage should be considered. Other determinations that should be carried out if the known properties of the test substance may, or are suspected to, affect related metabolic profiles include calcium, phosphate, fasting triglycerides, specific hormones, methemoglobin and cholinesterase. These must to be identified for chemicals in certain classes or on a case-by-case basis.

[1] For a number of measurements in serum and plasma, most notably for glucose, overnight fasting would be preferable. The major reason for this preference is that the increased variability which would inevitably result from non-fasting, would tend to mask more subtle effects and make interpretation difficult. On the other hand, however, overnight fasting may interfere with the general metabolism of the animals and, particularly in feeding studies, may disturb the daily exposure to the test substance. If overnight fasting is adopted, clinical biochemical determinations should be performed after the conduct of functional observations in week 4 of the study.

(iv) Overall, there is a need for a flexible approach, depending on the species and the observed and/or expected effect with a given compound.

(v) If historical baseline data are inadequate, consideration should be given to determination of hematological and clinical biochemistry variables before dosing commences.

(9) *Pathology*—(i)*Gross necropsy*. (A) All animals in the study must be subjected to a full, detailed gross necropsy which includes careful examination of the external surface of the body, all orifices, and the cranial, thoracic and abdominal cavities and their contents. The liver, kidneys, adrenals, testes, epididymides, thymus, spleen, brain and heart of all animals (apart from those found moribund and/or intercurrently sacrificed) should be trimmed of any adherent tissue, as appropriate, and their wet weight taken as soon as possible after dissection to avoid drying.

(B) The following tissues should be preserved in the most appropriate fixation medium for both the type of tissue and the intended subsequent histopathological examination: all gross lesions, brain (representative regions including cerebrum, cerebellum and pons), spinal cord, stomach, small and large intestines (including Peyer's patches), liver, kidneys, adrenals, spleen, heart, thymus, thyroid, trachea and lungs (preserved by inflation with fixative and then immersion), ovaries, uterus, testes, epididymides, accessory sex organs (e.g., prostate, seminal vesicles), urinary bladder, lymph nodes (preferably one lymph node covering the route of administration and another one distant from the route of administration to cover systemic effects), peripheral nerve (sciatic or tibial) preferably in close proximity to the muscle, and a section of bone marrow (or, alternatively, a fresh mounted bone marrow aspirate). The clinical and other findings may suggest the need to examine additional tissues. Also any organs considered likely to be target organs based on the known properties of the test substance should be preserved.

(ii) *Histopathology*. (A) Full histopathology should be carried out on the preserved organs and tissues of all animals in the control and high dose groups. These examinations should be extended to animals of all other dosage groups, if treatment-related changes are observed in the high dose group.

(B) All gross lesions must be examined.

(C) When a satellite group is used, histopathology should be performed on tissues and organs identified as showing effects in the treated groups.

(g) *Data and reporting*—(1) *Data*. (i) Individual data should be provided. Additionally, all data should be summarized in tabular form showing for each test group the number of animals at the start of the test, the number of animals found dead during the test or sacrificed for humane reasons and the time of any death or humane sacrifice, the number showing signs of toxicity, a description of the signs of toxicity observed, including time of onset, duration, and severity of any toxic effects, the number of animals showing lesions, the type of lesions and the percentage of animals displaying each type of lesion.

(ii) When possible, numerical results should be evaluated by an appropriate and generally acceptable statistical method. The statistical methods should be selected during the design of the study.

(2) *Test report*. The test report must include the following information:

(i) Test substance:

(A) Physical nature, purity and physicochemical properties.

(B) Identification data.

(ii) Vehicle (if appropriate): Justification for choice of vehicle, if other than water.

(iii) Test animals:

(A) Species/strain used.

(B) Number, age and sex of animals.

(C) Source, housing conditions, diet, etc.

(D) Individual weights of animals at the start of the test.

(iv) Test conditions:

(A) Rationale for dose level selection.

(B) Details of test substance formulation/diet preparation, achieved concentration, stability and homogeneity of the preparation.

(C) Details of the administration of the test substance.

(D) Conversion from diet/drinking water test substance concentration (parts per million (ppm)) to the actual dose (mg/kg body weight/day), if applicable.

(E) Details of food and water quality.

(v) Results:

(A) Body weight/body weight changes.

(B) Food consumption, and water consumption, if applicable.

(C) Toxic response data by sex and dose level, including signs of toxicity.

(D) Nature, severity and duration of clinical observations (whether reversible or not).

(E) Sensory activity, grip strength and motor activity assessments.

(F) Hematological tests with relevant base-line values.

(G) Clinical biochemistry tests with relevant base-line values.

(H) Body weight at sacrificing and organ weight data.

(I) Necropsy findings.

(J) A detailed description of all histopathological findings.

(K) Absorption data if available.

(L) Statistical treatment of results, where appropriate.

(vi) Discussion of results.

(vii) Conclusions.

(h) *References.* For additional background information on this test guideline, the following references should be consulted. These references are available for inspection at the TSCA Nonconfidential Information Center, Rm. NE–B607, Environmental Protection Agency, 401 M St., SW., Washington, DC, 12 noon to 4 p.m., Monday through Friday, except legal holidays.

(1) Tupper, D.E., Wallace, R.B. (1980). Utility of the Neurologic Examination in Rats. *Acta Neurobiological Exposure*, 40:999–1003.

(2) Gad, S.C. (1982). A Neuromuscular Screen for Use in Industrial Toxicology. *Journal of Toxicology and Environmental Health*, 9:691–704.

(3) Moser, V.C., McDaniel, K.M., Phillips, P.M. (1991). Rat Strain and Stock Comparisons Using a Functional Observational Battery: Baseline Values and Effects of Amitraz. *Toxicology and Applied Pharmacology*, 108:267–283.

(4) Meyer O.A., Tilson H.A., Byrd W.C., Riley M.T. (1979). A Method forthe Routine Assessment of Fore- and Hindlimb Grip Strength of Rats and Mice. *Neurobehavioral Toxicology*, 1:233–236.

(5) Crofton K.M., Howard J.L., Moser V.C., Gill M.W., Reiter L.W., Tilson H.A., MacPhail R.C. (1991). Interlaboratory Comparison of Motor Activity Experiments: Implication for Neurotoxicological Assessments. *Neurotoxicology and Teratology*, 13:599–609.

[65 FR 78780, Dec. 15, 2000]

§ 799.9310 TSCA 90-day oral toxicity in rodents.

(a) *Scope.* This section is intended to meet the testing requirements under section 4 of the Toxic Substances Control Act (TSCA). In the assessment and evaluation of the toxic characteristics of a chemical, the determination of subchronic oral toxicity may be carried out after initial information on toxicity has been obtained by acute testing. The subchronic oral study has been designed to permit the determination of the no-observed-effects level (NOEL) and toxic effects associated with continuous or repeated exposure to a test substance for a period of 90 days. This study is not capable of determining those effects that have a long latency period for development (e.g., carcinogenicity and life shortening). Extrapolation from the results of this study to humans is valid only to a limited degree. However, it can useful in providing information on health hazards likely to arise from repeated exposure by the oral route over a limited period of time, such as target organs, the possibilities of accumulation, and can be of use in selecting dose levels for chronic studies and for establishing safety criteria for human exposure.

(b) *Source.* The source material used in developing this TSCA test guideline is the Office of Prevention, Pesticides, and Toxic Substances (OPPTS) harmonized test guideline 870.3100 (August 1998, final guideline). This source is available at the address in paragraph (h) of this section.

(c) *Definitions.* The following definitions apply to this section.

Cumulative toxicity is the adverse effects of repeated doses occurring as a result of prolonged action on, or increased concentration of, the administered test substance or its metabolites in susceptible tissue.

Dose in a subchronic oral study is the amount of test substance administered daily via the oral route (gavage, drinking water or diet) for a period of 90 days. Dose is expressed as weight of the test substance (grams, milligrams) per unit body weight of test animal (milligram per kilogram) or as weight of the test substance in parts per million in food or drinking water per day.

No-observed-effects level (NOEL) is the maximum dose used in a study which produces no adverse effects. The NOEL is usually expressed in terms of the weight of a test substance given daily per unit weight of test animal (milligrams per kilogram per day).

Subchronic oral toxicity is the adverse effects occurring as a result of the repeated daily exposure of experimental animals to a chemical by the oral route for a part (approximately 10%) of the test animal's life span.

Target organ is any organ of a test animal showing evidence of an effect induced by a test substance.

(d) *Limit test.* If a test at one dose level of at least 1,000 mg/kg body weight (expected human exposure may indicate the need for a higher dose level), using the procedures described for this study, produces no observable toxic effects or if toxic effects would not be expected based upon data of structurally related compounds, then a full study using three dose levels might not be necessary.

(e) *Test procedures*—(1) *Animal selection*—(i) *Species and strain.* A variety of rodent species may be used, although the rat is the preferred species. Commonly used laboratory strains must be employed.

(ii) *Age/weight.* (A) Testing should be started with young healthy animals as soon as possible after weaning and acclimatization.

(B) Dosing of rodents should generally begin no later than 8–9 weeks of age.

(C) At the commencement of the study the weight variation of animals used must be within 20% of the mean weight for each sex.

(iii) *Sex.* Equal numbers of animals of each sex must be used at each dose level, and the females shall be nulliparous and nonpregnant.

(iv) *Numbers.* (A) At least 20 rodents (10 males and 10 females) at each dose level.

(B) If interim sacrifices are planned, the number must be increased by the number of animals scheduled to be sacrificed before the completion of the study.

(C) To avoid bias, the use of adequate randomization procedures for the proper allocation of animals to test and control groups is required.

(D) Each animal must be assigned a unique identification number. Dead animals, their preserved organs and tissues, and microscopic slides must be identified by reference to the animal's unique number.

(v) *Husbandry.* (A) Animals may be group-caged by sex, but the number of animals per cage must not interfere with clear observation of each animal. The biological properties of the test substance or toxic effects (e.g., morbidity, excitability) may indicate a need for individual caging.

(B) The temperature of the experimental animal rooms should be at 22 ± 3 °C.

(C) The relative humidity of the experimental animal rooms should be 50 ± 20%.

(D) Where lighting is artificial, the sequence should be 12 hours light/12 hours dark.

(E) Control and test animals must be fed from the same batch and lot. The feed should be analyzed to assure adequacy of nutritional requirements of the species tested and for impurities that might influence the outcome of the test. For feeding, conventional laboratory diets may be used with an unlimited supply of drinking water.

(F) The study should not be initiated until animals have been allowed a period of acclimatization/quarantine to environmental conditions, nor should animals from outside sources be placed on test without an adequate period of quarantine. An acclimation period of at least five days is recommended.

(2) *Control and test substances.* (i) Where necessary, the test substance is dissolved or suspended in a suitable vehicle. If a vehicle or diluent is needed, the vehicle should not elicit toxic effects or substantially alter the chemical or toxicological properties of the

test substance. It is recommended that wherever possible the usage of an aqueous solution be considered first, followed by consideration of a solution in oil and then solution in other vehicles.

(ii) If possible, one lot of the test substance tested should be used throughout the duration of the study and the research sample should be stored under conditions that maintain its purity and stability. Prior to the initiation of the study, there should be a characterization of the test substance, including the purity of the test compound and, if technically feasible, the names and quantities of contaminants and impurities.

(iii) If the test or control substance is to be incorporated into feed or another vehicle, the period during which the test substance is stable in such a mixture should be determined prior to the initiation of the study. Its homogeneity and concentration should be determined prior to the initiation of the study and periodically during the study. Statistically randomized samples of the mixture should be analyzed to ensure that proper mixing, formulation, and storage procedures are being followed, and that the appropriate concentration of the test or control substance is contained in the mixture.

(3) *Control groups.* A concurrent control group is required. This group must be an untreated or sham-treated control group or, if a vehicle is used in administering the test substance, a vehicle control group. If the toxic properties of the vehicle are not known or cannot be made available, both untreated and vehicle control groups are required.

(4) *Satellite group.* A satellite group of 20 animals (10 animals per sex) may be treated with the high dose level for 90 days and observed for reversibility, persistence, or delayed occurrence of toxic effects for a post-treatment period of appropriate length, normally not less than 28 days. In addition, a control group of 20 animals (10 animals of each sex) should be added to the satellite study.

(5) *Dose levels and dose selection.* (i) In subchronic toxicity tests, it is desirable to determine a dose-response relationship as well as a NOEL. Therefore, at least three dose levels plus a control and, where appropriate, a vehicle control (corresponding to the concentration of vehicle at the highest dose level) must be used. Doses should be spaced appropriately to produce test groups with a range of toxic effects. The data should be sufficient to produce a dose-response curve.

(ii) The highest dose level should result in toxic effects but not produce an incidence of fatalities which would prevent a meaningful evaluation.

(iii) The intermediate dose levels should be spaced to produce a gradation of toxic effects.

(iv) The lowest dose level should produce no evidence of toxicity.

(6) *Administration of the test substance.* (i) If the test substance is administered by gavage, the animals are dosed with the test substance on a 7–day per week basis for a period of at least 90 days. However, based primarily on practical considerations, dosing by gavage on a 5–day per week basis is acceptable. If the test substance is administered in the drinking water, or mixed in the diet, then exposure should be on a 7–day per week basis.

(ii) All animals must be dosed by the same method during the entire experimental period.

(iii) For substances of low toxicity, it is important to ensure that when administered in the diet the quantities of the test substance involved do not interfere with normal nutrition. When the test substance is administered in the diet, either a constant dietary concentration (parts per million) or a constant dose level in terms of body weight should be used; the alternative used should be specified.

(iv) For a substance administered by gavage, the dose should be given at approximately the same time each day, and adjusted at intervals (weekly or biweekly) to maintain a constant dose level in terms of body weight.

(7) *Observation period.* (i) The animals must be observed for a period of 90 days.

(ii) Animals in the satellite group (if used) scheduled for follow-up observations should be kept for at least 28 days further without treatment to detect recovery from, or persistence of, toxic effects.

(8) *Observation of animals.* (i) Observations must be made at least twice each day for morbidity and mortality. Appropriate actions should be taken to minimize loss of animals to the study (e.g., necropsy or refrigeration of those animals found dead and isolation or sacrifice of weak or moribund animals). General clinical observations should be made at least once a day, preferably at the same time each day, taking into consideration the peak period of anticipated effects after dosing. The clinical condition of the animal should be recorded.

(ii) A careful clinical examination must be made at least once weekly. Observations should be detailed and carefully recorded, preferably using explicity defined scales. Observations should include, but not be limited to, evaluation of skin and fur, eyes and mucous membranes, respiratory and circulatory effects, autonomic effects such as salivation, central nervous system effects, including tremors and convulsions, changes in the level of activity, gait and posture, reactivity to handling or sensory stimuli, altered strength, and stereotypes or bizarre behavior (e.g., self-mutilation, walking backwards).

(iii) Signs of toxicity should be recorded as they are observed including the time of onset, degree and duration.

(iv) Measurements of food consumption and water consumption, if drinking water is the exposure route, must be made weekly.

(v) Individual weights of animals must be determined shortly before the test substance is administered, weekly thereafter, and at death.

(vi) Moribund animals should be removed and sacrificed when noticed and the time of death should be recorded as precisely as possible.

(vii) At termination, all survivors in the treatment and control groups must be sacrificed.

(9) *Clinical pathology.* Hematology and clinical chemistry examinations must be made on all animals, including controls, of each sex in each group. The hematology and clinical chemistry parameters should be examined at terminal sacrifice at the end of the study. Overnight fasting of the animals prior to blood sampling is recommended. Overall, there is a need for a flexible approach in the measures examined, depending on the observed or expected effects from a chemical, and in the frequency of measures, depending on the duration of potential chemical exposures.

(i) *Hematology.* The recommended parameters are red blood cell count, hemoglobin concentration, hematocrit, mean corpuscular volume, mean corpuscular hemoglobin, and mean corpuscular hemoglobin concentration, white blood cell count, differential leukocyte count, platelet count, and a measure of clotting potential, such as prothrombin time or activated partial thromboplastin time.

(ii) *Clinical chemistry.* (A) Parameters which are considered appropriate to all studies are electrolyte balance, carbohydrate metabolism, and liver and kidney function. The selection of specific tests will be influenced by observations on the mode of action of the substance and signs of clinical toxicity.

(B) The recommended clinical chemistry determinations are potassium, sodium, glucose, total cholesterol, urea nitrogen, creatinine, total protein and albumin. More than 2 hepatic enzymes, (such as alanine aminotransferase, aspartate aminotransferase, alkaline phosphatase, sorbitol dehydrogenase, or gamma glutamyl transpeptidase) should also be measured. Measurements of addtional enzymes (of hepatic or other origin) and bile acids, may also be useful.

(C) If a test chemical has an effect on the hematopoietic system, reticulocyte counts and bone marrow cytology may be indicated.

(D) Other determinations that should be carried out if the test chemical is known or suspected of affecting related measures include calcium, phosphorus, fasting triglycerides, hormones, methemoglobin, and cholinesterases.

(iii) Optionally, the following urinalysis determinations could be performed during the last week of the study using timed urine volume collection: appearance, volume, osmolality or specific gravity, pH, protein, glucose and blood/blood cells.

(10) *Ophthalmological examination.* Ophthalmological examinations using an ophthalmoscope or an equivalent

device must be made on all animals prior to the administration of the test substance and on all high dose and control groups at termination. If changes in the eyes are detected, all animals in the other dose groups must be examined.

(11) *Gross necropsy*. (i) All animals must be subjected to a full gross necropsy which includes examination of the external surface of the body, all orifices, and the cranial, thoracic and abdominal cavities and their contents.

(ii) The liver, kidneys, adrenals, testes, epididymides, ovaries, uterus, thymus, spleen, brain, and heart must be trimmed and weighed wet, as soon as possible after dissection.

(iii) The following organs and tissues, or representative samples thereof, should be preserved in a suitable medium for possible future histopathological examination:

(A) Digestive system—salivary glands, esophagus, stomach, duodenum, jejunum, ileum, cecum, colon, rectum, liver, pancreas, gallbladder (when present).

(B) Nervous system—brain (including sections of medulla/pons, cerebellum and cerebrum), pituitary, peripheral nerve (sciatic or tibial, preferably in close proximity to the muscle), spinal cord (three levels: cervical, mid-thoracic and lumbar), eyes (retina, optic nerve).

(C) Glandular system—adrenals, parathyroid, thyroid.

(D) Respiratory system—trachea, lungs, pharynx, larynx, nose.

(E) Cardiovascular/hemopoietic system—aorta, heart, bone marrow (and/or fresh aspirate), lymph nodes (preferably one lymph node covering the route of administration and another one distant from the route of administration to cover systemic effects), spleen, thymus.

(F) Urogenital system—kidneys, urinary bladder, prostate, testes, epididymides, seminal vesicle(s), uterus, ovaries, female mammary gland.

(G) Others—all gross lesions and masses, skin.

(12) *Histopathology*. (i) The following histopathology must be performed:

(A) Full histopathology on the organs and tissues, listed in paragraph (e)(11)(iii) of this section, of all rodents in the control and high dose groups, and all rodents that died or were sacrificed during the study.

(B) All gross lesions in all animals.

(C) Target tissues in all animals.

(D) When a satellite group is used, histopathology should be performed on tissues and organs identified as showing effects in the treated groups.

(ii) If excessive early deaths or other problems occur in the high dose group compromising the significance of the data, the next dose level should be examined for complete histopathology.

(iii) An attempt should be made to correlate gross observations with microscopic findings.

(iv) Tissues and organs designated for microscopic examination should be fixed in 10% buffered formalin or a recognized suitable fixative as soon as necropsy is performed and no less than 48 hours prior to trimming.

(f) *Data and reporting*—(1) *Treatment of results.* (i) Data must be summarized in tabular form, showing for each test group the number of animals at the start of the test, the number of animals showing lesions, the types of lesions and the percentage of animals displaying each type of lesion.

(ii) When applicable, all observed results, qualitative and quantitative, should be evaluated by an appropriate and generally accepted statistical method. Any generally accepted statistical methods may be used; the statistical methods, including significance criteria, should be selected during the design of the study.

(2) *Evaluation of study results.* The findings of a subchronic oral toxicity study should be evaluated in conjunction with the findings of preceding studies and considered in terms of the toxic effects and the necropsy and histopathological findings. The evaluation must include the relationship between the dose of the test substance and the presence or absence, the incidence and severity, of abnormalities, including behavioral and clinical abnormalities, gross lesions, identified target organs, body weight changes, effects on mortality and any other general or specific toxic effects. A properly conducted subchronic test should provide a satisfactory estimation of a NOEL. It also can indicate the need for

an additional longer-term study and provide information on the selection of dose levels.

(3) *Test report.* In addition to reporting requirements specified under EPA Good Laboratory Practice Standards at 40 CFR part 792, subpart J, the following specific information must be reported:

(i) Test substance characterization should include:

(A) Chemical identification.

(B) Lot or batch number.

(C) Physical properties.

(D) Purity/impurities.

(ii) Identification and composition of any vehicle used.

(iii) Test system should contain data on:

(A) Species and strain of animals used and rationale for selection if other than that recommended.

(B) Age including body weight data and sex.

(C) Test environment including cage conditions, ambient temperature, humidity, and light/dark periods.

(D) Identification of animal diet.

(E) Acclimation period.

(iv) Test procedure should include the following data:

(A) Method of randomization used.

(B) Full description of experimental design and procedure.

(C) Dose regimen including levels, methods, and volume.

(v) Test results should include:

(A) Group animal data. Tabulation of toxic response data by species, strain, sex and exposure level for:

(*1*) Number of animals exposed.

(*2*) Number of animals showing signs of toxicity.

(*3*) Number of animals dying.

(B) Individual animal data. Data should be presented as summary (group mean) as well as for individual animals.

(*1*) Date of death during the study or whether animals survived to termination.

(*2*) Date of observation of each abnormal sign and its subsequent course.

(*3*) Body weight data.

(*4*) Feed and water (if collected) consumption data.

(5) Achieved dose (mg/kg/day) as a time-weighted average if the test substance is administered in the diet or drinking water.

(*6*) Results of ophthalmological examination.

(*7*) Results of hematological tests performed.

(*8*) Results of clinical chemistry tests performed.

(*9*) Results of urinalysis, if performed.

(*10*) Necropsy findings, including absolute and relative (to body weight) organ weight data.

(*11*) Detailed description of all histopathological findings.

(*12*) Statistical treatment of results, where appropriate.

(g) *Quality control.* A system must be developed and maintained to assure and document adequate performance of laboratory equipment. The study must be conducted in compliance with 40 CFR Part 792—Good Laboratory Practice Standards.

(h) *References.* For additional background information on this test guideline, the following references should be consulted. These references are available for inspection at the TSCA Nonconfidential Information Center, Rm. NE–B607, Environmental Protection Agency, 401 M St., NW., Washington, DC, 12 noon to 4 p.m., Monday through Friday, except legal holidays.

(1) Boyd, E.M. Chapter 14. Pilot Studies, 15. Uniposal Clinical Parameters, 16. Uniposal Autopsy Parameters. Predictive Toxicometrics. Williams and Wilkins, Baltimore (1972).

(2) Fitzhugh, O.G. *Subacute Toxicity, Appraisal of the Safety of Chemicals in Foods, Drugs and Cosmetics.* The Association of Food and Drug Officials of the United States (1959, 3rd Printing 1975) pp. 26–35.

(3) Organization for Economic Cooperation and Development. OECD uidelines for Testing of Chemicals. Guideline 408: Subchronic Oral Toxicity-Rodent: 90-day Study, Adopted: May 12, 1981.

(4) Weingand K., Brown G., Hall R. et al. Harmonization of Animal Clinical Pathology Testing in Toxicity and Safety Studies. *Fundam. & Appl. Toxicol.* 29:198-201. (1996)

[65 FR 78783, Dec. 15, 2000]

§ 799.9325 TSCA 90-day dermal toxicity.

(a) *Scope.* This section is intended to meet the testing requirements under section 4 of the Toxic Substances Control Act (TSCA). In the assessment and

evaluation of the toxic characteristics of a chemical, the determination of subchronic dermal toxicity may be carried out after initial information on toxicity has been obtained by acute testing. The subchronic dermal study has been designed to permit the determination of the no-observed-effects level (NOEL) and toxic effects associated with continuous or repeated exposure to a test substance for a period of 90 days. This study is not capable of determining those effects that have a long latency period for development (e.g., carcinogenicity and life shortening). Extrapolation from the results of this study to humans is valid only to a limited degree. It can, however, provide useful information on the degree of percutaneous absorption, target organs, the possibilities of accumulation, and can be of use in selecting dose levels for chronic studies and for establishing safety criteria for human exposure.

(b) *Source.* The source material used in developing this TSCA test guideline is the Office of Prevention, Pesticides, and Toxic Substances (OPPTS) harmonized test guideline 870.3250 (August 1998, final guideline). This source is available at the address in paragraph (h) of this section.

(c) *Definitions.* The following definitions also apply to this section.

Cumulative toxicity is the adverse effect of repeated doses occurring as a result of prolonged action or increased concentration of the administered test substance or its metabolites in susceptible tissues.

Dose in a subchronic dermal study is the amount of test substance applied daily to the skin for 90 days. Dose is expressed as weight of the test substance (grams, milligrams), per unit body weight of test animal (milligrams per kilogram), or as weight of the test substance per unit of surface area (milligrams per square centimeter) per day.

No-observed-effects level (NOEL) is the maximum dose used in a study which produces no adverse effects. The NOEL is expressed in terms of the weight of a test substance given daily per unit weight of test animal (milligrams per kilogram per day).

Subchronic dermal toxicity is the adverse effects occurring as a result of the repeated daily exposure of experimental animals to a chemical by the dermal route for a part of the test animal's life span.

Target organ is any organ of a test animal showing evidence of an effect induced by a test substance.

(d) *Limit test.* If a test at one dose level of at least 1,000 mg/kg body weight (expected human exposure may indicate the need for a higher dose level), using the procedures described for this section, produces no observable toxic effects or if toxic effects would not be expected based upon data on structurally related compounds, a full study using three dose levels might not be necessary.

(e) *Test procedures*—(1) *Animal selection*—(i) *Species and strain.* A mammalian species must be used for testing. The rat, rabbit, or guinea pig may be used. Commonly used laboratory strains must be employed. If other mammalian species are used, the tester must provide justification/reasoning for their selection. When a subchronic dermal study is conducted as a preliminary to a chronic dermal study, the same species and strain must be used in both studies.

(ii) *Age/weight.* (A) Testing should be started with young healthy animals as soon as possible after weaning and acclimatization.

(B) Dosing should generally begin in guinea pigs between 5–6 weeks of age, in rats between 8–9 weeks of age, and in rabbits at least 12 weeks old.

(C) At the commencement of the study, the weight variation of animals used must be within 20% of the mean weight for each sex.

(iii) *Sex.* Equal numbers of animals of each sex with healthy skin must be used at each dose level. The females shall be nulliparous and nonpregnant except for specially designed studies.

(iv) *Numbers.* (A) At least 20 animals (10 animals per sex) must be used at each dose level.

(B) If interim sacrifices are planned, the number must be increased by the number of animals scheduled to be sacrificed before completion of the study.

(C) To avoid bias, the use of adequate randomization procedures for the proper allocation of animals to test and control groups is required.

(D) Each animal must be assigned a unique identification number. Dead animals, their preserved organs and tissues, and microscopic slides must be identified by reference to the animal's unique number.

(v) *Husbandry.* (A) Animals should be housed in individual cages.

(B) The temperature of the experimental animal rooms should be at 22 ± 3 °C

(C) The relative humidity of the experimental animal rooms should be 50 ± 20%.

(D) Where lighting is artificial, the sequence should be 12 hours light/12 hours dark.

(E) Control and test animals must be fed from the same batch and lot. The feed should be analyzed to assure adequacy of nutritional requirements of the species tested and for impurities that might influence the outcome of the test. For feeding, conventional laboratory diets may be used with an unlimited supply of drinking water.

(F) The study should not be initiated until animals have been allowed a period of acclimatization/quarantine to environmental conditions, nor should animals from outside sources be placed on test without an adequate period of quarantine. An acclimation period of at least five days is recommended.

(2) *Control and test substances.* (i) Where necessary, the test substance is dissolved or suspended in a suitable vehicle. If a vehicle or diluent is needed, the vehicle should not elicit toxic effects or substantially alter the chemical or toxicological properties of the test substance. It is recommended that, whenever possible, the usage of an aqueous solution be considered first, followed by consideration of a solution of oil and then solution of other vehicles.

(ii) One lot of the test substance should be used, if possible, throughout the duration of the study, and the research sample should be stored under conditions that maintain its purity and stability. Prior to the initiation of the study, there should be a characterization of the test substance, including the purity of the test compound and if technically feasible, the name and quantities of unknown contaminants and impurities.

(iii) If the test substance is dissolved or suspended in a vehicle, the period during which the test substance is stable in such a mixture should be determined prior to the initiation of the study. Its homogeneity and concentration should be determined prior to the initiation of the study and periodically during the study. Statistically randomized samples of the mixture should be analyzed to ensure that proper mixing, formulation, and storage procedures are being followed, and that the appropriate concentration of the test or control substance is contained in the mixture.

(3) *Control groups.* A concurrent control group is required. This group must be an untreated or sham-treated control group or, if a vehicle is used in the application of the test substance, a vehicle control group. If the toxic properties of the vehicle are not known or not available, both untreated/sham-treated and vehicle control groups are required.

(4) *Satellite group.* A satellite group of 20 animals (10 animals per sex) may be treated with the high dose level for 90 days and observed for reversibility, persistence, or delayed occurrence of toxic effects for a post-treatment period of appropriate length, normally not less than 28 days. In addition a control group of 20 animals (10 animals per sex) should be added to the satellite study.

(5) *Dose levels and dose selection.* (i) In subchronic toxicity tests, it is desirable to determine a dose-response relationship as well as a NOEL. Therefore, at least three dose levels plus a control and, where appropriate, a vehicle control (corresponding to the concentration of vehicle at the highest dose level) group shall be used. Doses should be spaced appropriately to produce test groups with a range of toxic effects. The data should be sufficient to produce a dose-response curve.

(ii) The highest dose level should elicit signs of toxicity but not produce severe skin irritation or an incidence of fatality which would prevent a meaningful evaluation. If application of the test substance produces severe skin irritation, the concentration may be reduced, although this may result in a reduction in, or absence of, other

toxic effects at the high dose level. If the skin has been badly damaged early in the study, it may be necessary to terminate the study and undertake a new one at lower concentrations.

(iii) The intermediate dose levels should be spaced to produce a gradation of toxic effects.

(iv) The lowest dose level should not produce any evidence of toxic effects.

(6) *Preparation of animal skin.* Shortly before testing, fur must be clipped from not less than 10% of the body surface area for application of the test substance. In order to dose approximately 10% of the body surface, the area starting at the scapulae (shoulders) to the wing of the ileum (hipbone) and half way down the flank on each side of the animal should be shaved. Shaving should be carried out approximately 24 hours before dosing. Repeated clipping or shaving is usually needed at approximately weekly intervals. When clipping or shaving the fur, care should be taken to avoid abrading the skin which could alter its permeability.

(7) *Preparation of test substance.* (i) Liquid test substances are generally used undiluted, except as indicated in paragraph (e)(5)(ii) of this section.

(ii) Solids should be pulverized when possible. The substance should be moistened sufficiently with water or, when necessary, a suitable vehicle to ensure good contact with the skin. When a vehicle is used, the influence of the vehicle on toxicity of, and penetration of the skin by, the test substance should be taken into account.

(iii) The volume of application should be kept constant, e.g., less than 300 µL for the rat; different concentrations of test solution shall be prepared for different dose levels.

(8) *Administration of test substance.* (i) The duration of exposure should be at least for 90 days.

(ii) Ideally, the animals should be treated with test substance for at least 6 hours per day on a 7-day per week basis. However, based on practical considerations, application on a 5-day per week basis is acceptable. Dosing should be conducted at approximately the same time each day.

(iii) The test substance must be applied uniformly over the treatment site.

(iv) The surface area covered may be less for highly toxic substances. As much of the area should be covered with as thin and uniform a film as possible.

(v) During the exposure period, the test substance must be held in contact with the skin with a porous gauze dressing (less than or equal to 8 ply). The test site must be further covered with nonirritating tape to retain the gauze dressing and the test substance and to ensure that the animals cannot ingest the test substance. Restrainers may be used to prevent the ingestion of the test substance, but complete immobilization is not recommended. The test substance may be wiped from the skin after the six-hour exposure period to prevent ingestion.

(9) *Observation of animals.* (i) Observations must be made at least twice each day for morbidity and mortality. Appropriate actions should be taken to minimize loss of animals to the study (e.g., necropsy or refrigeration of those animals found dead and isolation or sacrifice of weak or moribund animals). General clinical observations must be made at least once a day, preferably at the same time each day, taking into consideration the peak period of anticipated effects after dosing. The clinical condition of the animal should be recorded.

(ii) A careful clinical examination must be made at least once weekly. Observations should be detailed and carefully recorded, preferably using explicity defined scales. Observations should include, but not be limited to, evaluation of skin and fur, eyes and mucous membranes, respiratory and circulatory effects, autonomic effects such as salivation, central nervous system effects, including tremors and convulsions, changes in the level of activity, gait and posture, reactivity to handling or sensory stimuli, altered strength, and stereotypes or bizarre behavior (e.g., self-mutilation, walking backwards).

(iii) Signs of toxicity should be recorded as they are observed including the time of onset, degree and duration.

(iv) Individual weights of animals must be determined shortly before the test substance is administered, weekly thereafter, and at death.

(v) Food consumption must also be determined weekly if abnormal body weight changes are observed.

(vi) Moribund animals should be removed and sacrificed when noticed and the time of death should be recorded as precisely as possible.

(vii) At termination, all survivors in the control and treatment groups must be sacrificed.

(10) *Clinical pathology*. Hematology and clinical chemistry examinations must be made on all animals, including controls, of each sex in each group. The hematology and clinical chemistry parameters should be examined at terminal sacrifice at the end of the study. Overnight fasting of the animals prior to blood sampling is recommended. Overall, there is a need for a flexible approach in the measures examined, depending on the observed or expected effects from a chemical, and in the frequency of measures, depending on the duration of potential chemical exposures.

(i) *Hematology*. The recommended parameters are red blood cell count, hemoglobin concentration, hematocrit, mean corpuscular volume, mean corpuscular hemoglobin, and mean corpuscular hemoglobin concentration, white blood cell count, differential leukocyte count, platelet count, and a measure of clotting potential, such as prothrombin time or activated partial thromboplastin time.

(ii) *Clinical chemistry*. (A) Parameters which are considered appropriate to all studies are electrolyte balance, carbohydrate metabolism, and liver and kidney function. The selection of specific tests will be influenced by observations on the mode of action of the substance and signs of clinical toxicity.

(B) The recommended clinical chemistry determinations are potassium, sodium, glucose, total cholesterol, urea nitrogen, creatinine, total protein and albumin. More than 2 hepatic enzymes, (such as alanine aminotransferase, aspartate aminotransferase, alkaline phosphatase, sorbitol dehydrogenase, or gamma glutamyl transpeptidase) should also be measured. Measurements of additional enzymes (of hepatic or other origin) and bile acids, may also be useful.

(C) If a test chemical has an effect on the hematopoietic system, reticulocyte counts and bone marrow cytology may be indicated.

(D) Other determinations that should be carried out if the test chemical is known or suspected of affecting related measures include calcium, phosphorus, fasting triglycerides, hormones, methemoglobin, and cholinesterases.

(iii) Optionally, the following urinalysis determinations could be performed during the last week of the study using timed urine volume collection: appearance, volume, osmolality or specific gravity, pH, protein, glucose and blood/blood cells.

(11) *Ophthalmological examination*. Using an ophthalmoscope or an equivalent device, ophthalmological examinations must be made on all animals prior to the administration of the test substance and on all high dose and control groups at termination. If changes in the eyes are detected, all animals in the other dose groups must be examined.

(12) *Gross necropsy*. (i) All animals must be subjected to a full gross necropsy which includes examination of the external surface of the body, all orifices, and the cranial, thoracic and abdominal cavities and their contents.

(ii) The liver, brain, kidneys, spleen, adrenals, testes, epididymides, uterus, ovaries, thymus and heart must be trimmed and weighed wet, as soon as possible after dissection.

(iii) The following organs and tissues, or representative samples thereof, must be preserved in a suitable medium for possible future histopathological examination:

(A) Digestive system—salivary glands, esophagus, stomach, duodenum, jejunum, ileum, cecum, colon, rectum, liver, pancreas, gallbladder (when present).

(B) Nervous system—brain (multiple sections, including cerebrum, cerebellum and medulla/pons), pituitary, peripheral nerve (sciatic or tibial, preferably in close proximity to the muscle), spinal cord (three levels, cervical, mid-thoracic and lumbar), eyes (retina, optic nerve).

(C) Glandular system—adrenals, parathyroid, thyroid.

(D) Respiratory system—trachea, lungs, pharynx, larynx, nose.

(E) Cardiovascular/Hematopoietic system—aorta, heart, bone marrow (and/or fresh aspirate), lymph nodes (preferably one lymph node covering the route of administration and another one distant from the route of administration to cover systemic effects), spleen, thymus.

(F) Urogenital system—kidneys, urinary bladder, prostate, testes, epididymides, seminal vesicle(s), uterus, ovaries, female mammary gland.

(G) Other—all gross lesions and masses, skin (both treated and adjacent untreated areas).

(13) *Histopathology.* (i) The following histopathology must be performed:

(A) Full histopathology on the organs and tissues, listed in paragraph (e)(12)(iii) of this section, of all animals in the control and high dose groups and all animals that died or were sacrificed during the study.

(B) All gross lesions in all animals.

(C) Target organs in all animals.

(D) When a satellite group is used, histopathology must be performed on tissues and organs identified as showing toxic effects in the treated groups.

(ii) If excessive early deaths or other problems occur in the high dose group compromising the significance of the data, the next dose level must be examined for complete histopathology.

(iii) An attempt should be made to correlate gross observations with microscopic findings.

(iv) Tissues and organs designated for microscopic examination should be fixed in 10% buffered formalin or a recognized suitable fixative as soon as necropsy is performed and no less than 48 hours prior to trimming.

(f) *Data and reporting*—(1) *Treatment of results.* (i) Data must be summarized in tabular form, showing for each test group, number of animals at the start of the test, the number of animals showing lesions, the types of lesions and the percentage of animals displaying each type of lesion.

(ii) When applicable, all observed results, qualitative and quantitative, should be evaluated by an appropriate and generally acceptable statistical method. Any generally accepted statistical method should be used; the statistical methods including significance criteria should be selected during the design of the study.

(2) *Evaluation of study results.* The findings of a subchronic dermal toxicity study should be evaluated in conjunction with the findings of preceding studies and considered in terms of toxic effects and the necropsy and histopathological findings. The evaluation should include the relationship between the dose of the test substance, the incidence and severity of abnormalities including behavioral and clinical abnormalities, gross lesions, identified target organs, body weight changes, effect on mortality, and any other general or specific toxic effects. A properly conducted 90-day subchronic dermal study should provide information on the effects of repeated application of a substance and a satisfactory estimation of a NOEL. It also can indicate the need for an additional longer-term study and provide information on the selection of dose levels.

(3) *Test report.* In addition to reporting requirements specified under EPA Good Laboratory Practice Standards at 40 CFR part 792, subpart J, the following specific information must be reported:

(i) Test substance characterization should include:

(A) Chemical identification.

(B) Lot or batch numbers.

(C) Physical properties.

(D) Purity/impurities.

(ii) Identification and composition of any vehicle if used.

(iii) Test system should contain data on:

(A) Species and strain of animals used and rationale for selection if other than that recommended.

(B) Age including body weight data and sex.

(C) Test environment including cage conditions, ambient temperature, humidity, and light/dark periods.

(D) Identification of animal diet.

(E) Acclimation period.

(iv) Test procedure should include the following data:

(A) Method of randomization used.

(B) Full description of experimental design and procedure.

(C) Dose regime including levels, method, and volume.

(v) Test results should include:

(A) Group animal data. Tabulation of toxic response data by species, strain, sex and exposure level for:

(*1*) Number of animals exposed.

(*2*) Number of animals showing signs of toxicity.

(*3*) Number of animals dying.

(B) Individual animal data. Data should be presented as summary (group mean) as well as for individual animals.

(*1*) Date of death during the study or whether animals survived to termination.

(*2*) Date of observation of each abnormal sign and its subsequent course.

(*3*) Body weight data.

(*4*) Feed consumption data, when collected.

(*5*) Results of ophthalmological examination.

(*6*) Results of hematological tests performed.

(*7*) Results of clinical chemistry tests performed.

(*8*) Results of urinalysis, when performed.

(*9*) Results of observations made.

(*10*) Necropsy findings, including absolute and relative (to body weight) organ weight data.

(*11*) Detailed description of all histopathological findings.

(*12*) Statistical treatment of results, where appropriate.

(g) *Quality control.* A system must be developed and maintained to assure and document adequate performance of laboratory equipment. The study must be conducted in compliance with the Good Laboratory Practice (GLP) regulations.

(h) *References.* For additional background information on this test guideline, the following references should be consulted. These references are available for inspection at the TSCA Nonconfidential Information Center, Rm. NE–B607, Environmental Protection Agency, 401 M St., NW., Washington, DC, 12 noon to 4 p.m., Monday through Friday, except legal holidays.

(1) Organization for Economic Cooperation and Development. Guidelines for Testing of Chemicals, Section 4-Health Effects, Part 411 Subchronic Toxicity Studies, Paris, 1981.

(2) Weingand K, Brown G, Hall R et al. (1996). Harmonization of Animal Clinical Pathology Testing in Toxicity and Safety Studies. *Fundam. & Appl. Toxicol.* 29:198-201.

[65 FR 78786, Dec. 15, 2000]

§ 799.9346 TSCA 90-day inhalation toxicity.

(a) *Scope.* This section is intended to meet the testing requirements under section 4 of TSCA. In the assessment and evaluation of the toxic characteristics of a gas, volatile substance, or aerosol/particulate, determination of subchronic inhalation toxicity may be carried out after initial information on toxicity has been obtained by acute testing. The subchronic inhalation study has been designed to permit the determination of the no-observed-effect-level (NOEL) and toxic effects associated with continuous or repeated exposure to a test substance for a period of 90 days. This study is not capable of determining those effects that have a long latency period for development (e.g., carcinogenicity and life shortening). Extrapolation from the results of this study to humans is valid only to a limited degree. It can, however, provide useful information on health hazards likely to arise from repeated exposures by the inhalation route over a limited period of time. It will provide information on target organs and the possibilities of accumulation, and can be of use in selecting concentration levels for chronic studies and establishing safety criteria for human exposure. Hazards of inhaled substances are influenced by the inherent toxicity and by physical factors such as volatility and particle size.

(b) *Source.* The source material used in developing this TSCA test guideline is the OPPTS harmonized test guideline 870.3465 (June 1996 Public Draft). This source is available at the address in paragraph (h) of this section.

(c) *Definitions.* The following definitions apply to this section.

Aerodynamic equivalent diameter is defined as the diameter of a unit density sphere having the same terminal settling velocity as the particle in question, whatever its size, shape, and density. It is used to predict where in the respiratory tract such particles may be deposited.

Concentration in a subchronic inhalation study is the amount of test substance administered via inhalation for a period of 90-days. Concentration is expressed as weight of the test substance per unit volume of air (milligrams per liter or parts per million).

Cumulative toxicity is the adverse effects of repeated exposures occurring as a result of prolonged action on, or increased concentration of the administered test substance or its metabolites in susceptible tissues.

Inhalable diameter refers to that aerodynamic diameter of a particle which is considered to be inhalable for the organism. It is used to refer to particles which are capable of being inhaled and may be deposited anywhere within the respiratory tract

Mass median aerodynamic diameter (MMAD) is the median aerodynamic diameter and along with the geometric standard deviation (GSD) is used to describe the particle size distribution of any aerosol statistically based on the weight and size of the particles. Fifty percent of the particles by weight will be smaller than the median diameter and 50% of the particles will be larger.

No-observed-effect-level (NOEL) is the maximum concentration used in a study which produces no adverse effects.

Subchronic inhalation toxicity is the adverse effects occurring as a result of the repeated daily exposure of experimental animals to a chemical by inhalation for part (approximately 10%) of a life span.

(d) *Limit test*. If exposure at a concentration of 1 mg/L (expected human exposure may indicate the need for a higher concentration), or where this is not possible due to physical or chemical properties of the test substance, the maximum attainable concentration produces no observable toxic effects, then a full study using three concentrations might not be necessary.

(e) *Test procedures*—(1) *Animal selection*—(i) *Species and strain*. A mammalian species shall be used for testing. A variety of rodent species may be used, although the rat is the preferred species. Commonly used laboratory strains should be employed. If another mammalian species is used, the tester shall provide justification/reasoning for its selection.

(ii) *Age/weight*. Testing should be started with young healthy animals as soon as possible after weaning and acclimatization.

(B) Dosing of rodents should generally begin no later than 8 weeks of age.

(C) At the commencement of the study the weight variation of animals used shall not exceed ±20% of the mean weight for each sex.

(iii) *Sex*. (A) Equal numbers of animals of each sex shall be used at each concentration.

(B) Females shall be nulliparous and nonpregnant.

(iv) *Numbers*. (A) At least 20 animals (10 females and 10 males) should be used for each test group.

(B) If interim sacrifices are planned, the number of animals shall be increased by the number of animals scheduled to be sacrificed before the completion of the study.

(C) To avoid bias, the use of adequate randomization procedures for the proper allocation of animals to test and control groups is required.

(D) Each animal shall be assigned a unique identification number. Dead animals, their preserved organs and tissues, and microscopic slides shall be identified by reference to the animal's unique number.

(v) *Husbandry*. (A) Animals may be group-caged by sex, but the number of animals per cage must not interfere with clear observation of each animal. The biological properties of the test substance or toxic effects (e.g., morbidity, excitability) may indicate a need for individual caging. Animals must be housed individually in inhalation chambers during exposure to aerosols.

(B) The temperature of the experimental animal rooms should be at 22 ±3 °C.

(C) The relative humidity of the experimental animal rooms should be 30–70%.

(D) Where lighting is artificial, the sequence should be 12 h light/12 h dark.

(E) Control and test animals should be fed from the same batch and lot. The feed should be analyzed to assure adequacy of nutritional requirements

of the species tested and for impurities that might influence the outcome of the rest. For feeding, conventional laboratory diets may be used with an unlimited supply of drinking water.

(F) The study should not be initiated until animals have been allowed a period of acclimatization/quarantine to environmental conditions, nor should animals from outside sources be placed on test without an adequate period of quarantine. An acclimatization period of at least 5 days is recommended.

(2) *Control and test substances.* (i) Whenever it is necessary to formulate the test substance with a vehicle for aerosol generation, the vehicle ideally should not elicit toxic effects or substantially alter the chemical or toxicological properties of the test substance.

(ii) One lot of the test substance should be used, if possible throughout the duration of the study, and the research sample should be stored under conditions that maintain its purity and stability. Prior to the initiation of the study, there should be a characterization of the test substance, including the purity of the test substance and, if technically feasible, the name and quantities of unknown contaminants and impurities.

(3) *Control groups.* A concurrent control group is required. This group shall be an untreated or sham-treated control group. Except for treatment with the test substance, animals in the control group shall be handled in a manner identical to the test group animals. Where a vehicle other than water is used to generate a substance, a vehicle control group should be used. If the toxic properties of the vehicle are not known or cannot be made available, both untreated and vehicle control groups are required.

(4) *Satellite group.* A satellite group of 20 animals (10 animals per sex) may be treated with the high concentration level for 90 days and observed for reversibility, persistence, or delayed occurrence of toxic effects for a post-treatment period of appropriate length, normally not less than 28 days. In addition, a control group of 20 animals (10 animals of each sex) should be added to the satellite study.

(5) *Concentration levels and concentration selection.* (i) In subchronic toxicity tests, it is desirable to have a concentration-response relationship as well as a NOEL. Therefore, at least three concentration levels plus a control and, where appropriate, a vehicle control (corresponding to the concentration of vehicle at the highest exposure level) shall be used. Concentrations should be spaced appropriately to produce test groups with a range of toxic effects. The data should be sufficient to produce a concentration-response curve.

(ii) The highest concentration should result in toxic effects but not produce an incidence of fatalities which would prevent a meaningful evaluation.

(iii) The intermediate concentrations should be spaced to produce a gradation of toxic effects.

(iv) The lowest concentration should produce no evidence of toxicity.

(v) In the case of potentially explosive test substances, care should be taken to avoid generating explosive concentrations.

(6) *Administration of the test substance.* Animals should be exposed to the test substance for 6 h per day on a 7-day per week basis for a period of at least 90 days. Based primarily on practical considerations, exposure for 6 h per day on a 5–day per week basis is acceptable.

(7) *Observation period.* The animals should be observed for a period of 90 days. Animals in the satellite group (if used) scheduled for follow-up observations should be kept for at least 28 days further without treatment to assess reversibility.

(8) *Exposure specifications.* (i) The animals shall be tested in dynamic inhalation equipment designed to sustain a minimum airflow of 10 air changes per hr, an adequate oxygen content of at least 19%, and uniform conditions throughout the exposure chamber. Maintenance of slight negative pressure inside the chamber will prevent leakage of the test substance into the surrounding areas. It is not normally necessary to measure chamber oxygen concentration if airflow is adequate.

(ii) The selection of a dynamic inhalation chamber should be appropriate for the test substance and test system. Where a whole body chamber is used to

expose animals to an aerosol, individual housing must be used to minimize crowding of the test animals and maximize their exposure to the test substance. To ensure stability of a chamber atmosphere, the total volume occupied by the test animals shall not exceed 5% of the volume of the test chamber. It is recommended, but not required, that nose-only or head-only exposure be used for aerosol studies in order to minimize oral exposures due to animals licking compound off their fur. Heat stress should be minimized.

(iii) The temperature at which the test is performed should be maintained at 22±2 °C. The relative humidity should be maintained between 40 and 60%, but in certain instances (e.g., use of water vehicle) this may not be practicable.

(9) *Physical measurements.* Measurements or monitoring shall be made of the following:

(i) The rate of airflow shall be monitored continuously but recorded at least three times during the exposure.

(ii) The actual concentrations of the test substance shall be measured in the animal's breathing zone. During the exposure period, the actual concentrations of the test substance shall be held as constant as practicable and monitored continuously or intermittently depending on the method of analysis. Chamber concentration may be measured using gravimetric or analytical methods as appropriate. If trial run measurements are reasonably consistent ±10% for liquid, aerosol, gas, or vapor; ±20% for dry aerosol), then two measurements should be sufficient. If measurements are not consistent, three to four measurements should be taken. Whenever the test substance is a formulation, or it is necessary to formulate the test substance with a vehicle for aerosol generation, the analytical concentration must be reported for the total formulation, and not just for the active ingredient (AI). If, for example, a formulation contains 10% AI and 90% inerts, a chamber analytical limit concentration of 2 mg/L would consist of 0.2 mg/L of the AI. It is not necessary to analyze inert ingredients provided the mixture at the animal's breathing zone is analogous to the formulation; the grounds for this conclusion must be provided in the study report. If there is some difficulty in measuring chamber analytical concentration due to precipitation, nonhomogeneous mixtures, volatile components, or other factors, additional analyses of inert components may be necessary.

(iii) During the development of the generating system, particle size analysis shall be performed to establish the stability of aerosol concentrations with respect to particle size. The MMAD particle size range should be between 1–3 µm. The particle size of hygroscopic materials should be small enough when dry to assure that the size of the swollen particle will still be within the 1–3 µm range. Measurements of aerodynamic particle size in the animal's breathing zone should be measured during a trial run. If MMAD valves for each exposure level are within 10% of each other, then two measurements during the exposures should be sufficient. If pretest measurements are not within 10% of each other, three to four measurements should be taken.

(iv) Temperature and humidity shall be monitored continuously and recorded at least three times during an exposure.

(10) *Feed and water during exposure period.* Feed shall be withheld during exposure. Water may also be withheld during exposure.

(11) *Observation of animals.* (i) During and following exposure, observations are made and recorded systematically; individual records should be maintained for each animal. It is not always possible to observe animals during exposure in a whole-body chamber.

(ii) Observations shall be made at least once each day for morbidity and mortality. Appropriate actions should be taken to minimize loss of animals to the study (e.g., Necropsy or refrigeration of those animals found dead and isolation or sacrifice of weak or moribund animals).

(iii) A careful clinical examination shall be made at least once weekly. Observations should be detailed and carefully recorded, preferably using explicitly defined scales. Observations should include, but not be limited to, evaluation of skin and fur, eyes and mucous

membranes, respiratory and circulatory effects, autonomic effects such as salivation, central nervous system effects, including tremors and convulsions, changes in the level of activity, gait and posture, reactivity to handling or sensory stimuli, altered strength, and stereotypes or bizarre behavior (e.g., self-mutilation, walking backwards).

(iv) Signs of toxicity should be recorded as they are observed including the time of onset, degree and duration.

(v) Individual weights of animals shall be determined shortly before the test substance is administered, and weekly thereafter.

(vi) Food consumption shall also be determined weekly if abnormal body weight changes are observed.

(vii) Moribund animals should be removed and sacrificed when noticed and the time of death should be recorded as precisely as possible.

(viii) At termination, all survivors in the treatment groups shall be sacrificed.

(12) *Clinical pathology*. Hematology and clinical chemistry examinations shall be made on all animals, including controls, of each sex in each group. The hematology and clinical chemistry parameters should be examined at terminal sacrifice at the end of the study. Overnight fasting of the animals prior to blood sampling is recommended. Overall, there is a need for a flexible approach in the measures examined, depending on the observed or expected effects from a chemical, and in the frequency of measures, depending on the duration of potential chemical exposures.

(i) Hematology. The recommended parameters are red blood cell count, hemoglobin concentration, hematocrit, mean corpuscular volume, mean corpuscular hemoglobin, and mean corpuscular hemoglobin concentration, white blood cell count, differential leukocyte count, platelet count, and a measure of clotting potential, such as prothrombin time or activated partial thromboplastin time.

(ii) Clinical chemistry. (A) Parameters which are considered appropriate to all studies are electrolyte balance, carbohydrate metabolism, and liver and kidney function. The selection of specific tests will be influenced by observations on the mode of action of the substance and signs of clinical toxicity.

(B) The recommended clinical chemistry determinations are potassium, sodium, glucose, total cholesterol, urea nitrogen, creatinine, total protein and albumin. More than 2 hepatic enzymes, (such as alanine aminotransferase, aspartate aminotransferase, alkaline phosphatase, sorbitol dehydrogenase, or gamma glutamyl transpeptidase) should also be measured. Measurements of addtional enzymes (of hepatic or other origin) and bile acids, may also be useful.

(C) If a test chemical has an effect on the hematopoietic system, reticulocyte counts and bone marrow cytology may be indicated.

(D) Other determinations that should be carried out if the test chemical is known or suspected of affecting related measures include calcium, phosphorus, fasting triglycerides, hormones, methemoglobin, and cholinesterases.

(iii) Optionally, the following urinalysis determinations could be performed during the last week of the study using timed urine volume collection: appearance, volume, osmolality or specific gravity, pH, protein, glucose, and blood/blood cells.

(13) *Ophthalmological examination*. Ophthalmological examinations shall be made on all animals prior to the administration of the test substance and on all high concentration and control groups at termination. If changes in the eyes are detected, all animals in the other concentration groups shall be examined.

(14) *Gross pathology*. (i) All animals shall be subjected to a full gross necropsy which includes examination of the external surface of the body, all orifices and the cranial, thoracic, and abdominal cavities and their contents.

(ii) At least the liver, kidneys, brain, and gonads shall be trimmed and weighed wet, as soon as possible after dissection to avoid drying.

(iii) The following organs and tissues, or representative samples thereof, shall be preserved in a suitable medium for possible future histopathological examination:

(A) Digestive system.

(*1*) Salivary glands.

(*2*) Esophagus.
(*3*) Stomach.
(*4*) Duodenum.
(*5*) Jejunum.
(*6*) Ileum.
(*7*) Cecum.
(*8*) Colon.
(*9*) Rectum.
(*10*) Liver.
(*11*) Pancreas.
(*12*) Gallbladder (dogs).
(B) Nervous system.
(*1*) Brain (multiple sections).
(*2*) Pituitary.
(*3*) Peripheral nerve(s).
(*4*) Spinal cord (three levels).
(*5*) Eyes (retina, optic nerve).
(C) Glandular system.
(*1*) Adrenals.
(*2*) Parathyroids.
(*3*) Thyroids.
(D) Respiratory system.
(*1*) Trachea.
(*2*) Lung.
(*3*) Pharynx.
(*4*) Larynx.
(*5*) Nose.
(E) Cardiovascular/hematopoietic system.
(*1*) Aorta (thoracic).
(*2*) Heart.
(*3*) Bone marrow.
(*4*) Lymph nodes.
(*5*) Spleen.
(*6*) Thymus.
(F) Urogenital system.
(*1*) Kidneys.
(*2*) Urinary bladder.
(*3*) Prostate.
(*4*) Testes.
(*5*) Epididymides.
(*6*) Seminal vesicle(s).
(*7*) Uterus.
(*8*) Ovaries.
(G) Other.
(*1*) Lacrimal gland.
(*2*) Mammary gland.
(*3*) Skin.
(*4*) Skeletal muscle.
(*5*) All gross lesions and masses.
(*6*) Sternum and/or femur.

(15) *Histopathology*. (i) The following histopathology shall be performed:

(A) Full histopathology on the respiratory tract and other organs and tissues, listed under paragraph (e)(15)(iii) of this section, of all animals in the control and high exposure groups and all animals that died or were killed during the study.

(B) All gross lesions in all animals.

(C) Target organs in all animals.

(D) Lungs of all animals. Special attention to examination of the respiratory tract should be made for evidence of infection as this provides a convenient assessment of the state of health of the animals.

(E) When a satellite group is used, histopathology shall be performed on tissues and organs identified as showing effects in the treated groups.

(ii) If excessive early deaths or other problems occur in the high exposure group compromising the significance of the data, the next concentration should be examined for complete histopathology.

(iii) An attempt should be made to correlate gross observations with microscopic findings.

(iv) Tissues and organs designated for microscopic examination should be fixed in 10% buffered formalin or a recognized suitable fixative as soon as necropsy is performed and no less than 48 hrs prior to trimming. Tissues should be trimmed to a maximum thickness of 0.4 cm for processing.

(f) *Data and reporting*—(1) *Treatment of results.* (i) Data shall be summarized in tabular form, showing for each test group the number of animals at the start of the test, the number of animals showing lesions, the types of lesions, and the percentage of animals displaying each type of lesion.

(ii) All observed results (quantitative and qualitative) should be evaluated by an appropriate statistical method. Any generally accepted statistical method may be used; the statistical methods including significance criteria should be selected during the design of the study.

(2) *Evaluation of study results.* The findings of the subchronic inhalation toxicity study should be evaluated in conjunction with the findings of preceding studies and considered in terms of the observed toxic effects and the necropsy and histopathological findings. The evaluation will include the relationship between the concentration of the test substance and duration of exposure, and the presence or absence,

the incidence and severity, of abnormalities, including behavioral and clinical abnormalities, gross lesions, identified target organs, body weight changes, effects on mortality and any other general or specific toxic effects. A properly conducted subchronic test should provide a satisfactory estimation of a no-effect level. It also can indicate the need for an additional longer-term study and provide information on the selection of concentrations.

(3) *Test report.* In addition to reporting requirements specified under 40 CFR part 792, subpart J, the following specific information shall be reported. Both individual and summary data should be presented.

(i) Test substance characterization shall include:

(A) Chemical identification.

(B) Lot or batch number.

(C) Physical properties.

(D) Purity/impurities.

(E) Identification and composition of any vehicle used.

(ii) Test system information shall include:

(A) Species and strain of animals used and rationale for selection if other than that recommended.

(B) Age, sex, and body weight.

(C) Test environment including cage conditions, ambient temperature, humidity, and light/dark periods.

(D) Identification of animal diet.

(E) Acclimation period.

(iii) Test procedure information shall include:

(A) Method of randomization used.

(B) Full description of experimental design and procedure.

(C) Exposure regimen including concentration levels, methods, and volume.

(D) Description of test conditions; the following exposure conditions shall be reported:

(*1*) Description of exposure apparatus including design, type, volume, source of air, system for generating aerosols, method of conditioning air, treatment of exhaust air and the method of housing the animals in a test chamber.

(*2*) The equipment for measuring temperature, humidity, and particulate aerosol concentrations and size should be described.

(E) Exposure data shall be tabulated and presented with mean values and a measure of variability (e.g., standard deviation) and include:

(*1*) Airflow rates through the inhalation equipment.

(*2*) Temperature and humidity of air.

(*3*) Actual (analytical or gravimetric) concentration in the breathing zone.

(*4*) Nominal concentration (total amount of test substance fed into the inhalation equipment divided by volume of air).

(*5*) Particle size distribution, calculated mass median aerodynamic diameter (MMAD) and geometric standard deviation (GSD).

(*6*) Explanation as to why the desired chamber concentration and/or particle size could not be achieved (if applicable) and the efforts taken to comply with this aspect of the section.

(iv) Test results information shall include:

(A) *Group animal data.* Tabulation of toxic response data by species, strain, sex and exposure level for:

(*1*) Number of animals exposed.

(*2*) Number of animals showing signs of toxicity.

(*3*) Number of animals dying.

(B) *Individual animal data.* Data should be presented as summary (group mean) as well as for individual animals.

(*1*) Time of death during the study or whether animals survived to termination.

(*2*) Time of observation of each abnormal sign and its subsequent course.

(*3*) Body weight data.

(*4*) Feed consumption data, when collected.

(*5*) Results of ophthalmological examination, when performed.

(*6*) Results of hematological tests performed. .

(*7*) Results of clinical chemistry tests performed.

(*8*) Results of urinalysis tests performed.

(*9*) Necropsy findings, including absolute and relative organ weight data.

(*10*) Detailed description of all histopathological findings.

(*11*) Statistical treatment of results, where appropriate.

(g) *Quality control.* A system shall be developed and maintained to assure

and document adequate performance of laboratory staff and equipment. The study shall be conducted in compliance with 40 CFR part 792—Good Laboratory Practice Standards.

(h) *References.* For additional background information on this test guideline, the following references should be consulted. These references are available for inspection at the TSCA Nonconfidential Information Center, Rm. NE–B607, Environmental Protection Agency, 401 M St., SW., Washington, DC, 12 noon to 4 p.m., Monday through Friday, except legal holidays.

(1) Cage, J.C. Ed. Paget, G.E. *Experimental Inhalation Toxicology, Methods in Toxicology.* (F.A. Davis Co., Philadelphia, PA, 1970) pp. 258–277.

(2) Casarett, L.J. and Doull. Chapter 9. *Toxicology: The Basic Science of Poisons* (New York: Macmillan Publishing Co., Inc., 1975).

(3) U.S. Environmental Protection Agency, Office of Pesticide Programs, Health Effects Division. Interim policy for particle size and limit concentration issues in inhalation toxicity studies (February 1, 1994).

(4) MacFarland, H.N. Ed. Hayes, W.J. Vol. 7. *Respiratory Toxicology, Essays in Toxicology.* (Academic Press, New York, NY, 1976) pp. 121–154.

(5) Organisation for Economic Co-operation and Development. Guidelines for testing of chemicals, section 4-health effects, part 413. *Subchronic Inhalation Toxicity Studies* (Paris, 1981).

[62 FR 43824, Aug. 15, 1997, as amended at 64 FR 35077, June 30, 1999]

§ 799.9355 TSCA reproduction/developmental toxicity screening test.

(a) *Scope*—(1) *Applicability.* This section is intended to meet testing requirements of the Toxic Substances Control Act (TSCA) (15 U.S.C. 2601).

(2) *Source.* The source material used in developing this TSCA test guideline is the Office of Prevention, Pesticides, and Toxic Substances (OPPTS) harmonized test guideline 870.3550 (July 2000, final guidelines). This source is available at the address in paragraph (h) of this section.

(b) *Purpose.* (1) This guideline is designed to generate limited information concerning the effects of a test substance on male and female reproductive performance such as gonadal function, mating behavior, conception, development of the conceptus, and parturition. It is not an alternative to, nor does it replace, the existing comprehensive test standards in §§ 799.9370 and 799.9380.

(2) This screening test guideline can be used to provide initial information on possible effects on reproduction and/or development, either at an early stage of assessing the toxicological properties of chemicals, or on chemicals of high concern. It can also be used as part of a set of initial screening tests for existing chemicals for which little or no toxicological information is available, as a dose range finding study for more extensive reproduction/developmental studies, or when otherwise considered relevant.

(3) This test does not provide complete information on all aspects of reproduction and development. In particular, it offers only limited means of detecting postnatal manifestations of prenatal exposure, or effects that may be induced during postnatal exposure. Due (amongst other reasons) to the relatively small numbers of animals in the dose groups, the selectivity of the end points, and the short duration of the study, this method will not provide evidence for definite claims of no effects.

(c) *Definitions.* The definitions in section 3 of TSCA and in 40 CFR Part 792—Good Laboratory Practice Standards apply to this section. The following definitions also apply to this section.

Dosage is a general term comprising of dose, its frequency and the duration of dosing.

Dose is the amount of test substance administered. Dose is expressed as weight (g, mg) as weight of test substance per unit weight of test animal (e.g., mg/kg), or as constant dietary concentration parts per million (ppm).

No-observed-effects level (NOEL) is the maximum dose used in a study which produces no adverse effects. The NOEL is expressed in terms of the weight of a test substance given daily per unit weight of test animal (milligrams per kilograms per day).

(d) *Principle of the test.* (1) The test substance is administered in graduated doses to several groups of males and females. Males should be dosed for a minimum of four weeks and up to and including the day before scheduled sacrifice (this includes a minimum of two

weeks prior to mating, during the mating period and, approximately, two weeks post-mating). In view of the limited pre-mating dosing period in males, fertility may not be a particular sensitive indicator of testicular toxicity. Therefore, a detailed histological examination of the testes is essential. The combination of a pre-mating dosing period of two weeks and subsequent mating/fertility observations with an overall dosing period of at least four weeks, followed by detailed histopathology of the male gonads, is considered sufficient to enable detection of the majority of effects on male fertility and spermatogenesis.

(2) Females should be dosed throughout the study. This includes two weeks prior to mating (with the objective of covering at least two complete oestrous cycles), the variable time to conception, the duration of pregnancy and at least four days after delivery, up to and including the day before scheduled sacrifice.

(3) Duration of study, following acclimatization, is dependent on the female performance and is approximately 54 days, (at least 14 days premating, (up to) 14 days mating, 22 days gestation, 4 days lactation).

(4) During the period of administration, the animals are observed closely each day for signs of toxicity. Animals which die or are sacrificed during the test period are necropsied and, at the conclusion of the test, surviving animals are sacrificed and necropsied.

(e) *Description of the method*—(1) *Selection of animal species.* This test standard is designed for use with the rat. If other species are used, appropriate modifications will be necessary. Strains with low fecundity or well-known high incidence of developmental defects should not be used. Healthy virgin animals, not subjected to previous experimental procedures, should be used. The test animals should be characterized as to species, strain, sex, weight and/or age. At the commencement of the study the weight variation of animals used should be minimal and not exceed 20% of the mean weight of each sex.

(2) *Housing and feeding conditions.* (i) The temperature in the experimental animal room should be 22 °C (± 3°). Although the relative humidity should be at least 30% and preferably not exceed 70% other than during room cleaning, the aim should be 50–60%. Lighting should be artificial, the sequence being 12 hours light, 12 hours dark. For feeding, conventional laboratory diets may be used with an unlimited supply of drinking water. The choice of diet may be influenced by the need to ensure a suitable admixture of a test substance when administered by this method.

(ii) Animals may be housed individually or be caged in small groups of the same sex; for group caging, no more than five animals should be housed per cage. Mating procedures should be carried out in cages suitable for the purpose. Pregnant females should be caged individually and provided with nesting materials.

(3) *Preparation of the animals.* Healthy young adult animals must be randomly assigned to the control and treatment groups. Cages should be arranged in such a way that possible effects due to cage placement are minimized. The animals must be uniquely identified and kept in their cages for at least five days prior to the start of the study to allow for acclimatization to the laboratory conditions.

(4) *Preparation of doses.* (i) It is recommended that the test substance be administered orally unless other routes of administration are considered more appropriate. When the oral route is selected, the test compound is usually administered by gavage; however, alternatively, test compounds may be administered via the diet or drinking water.

(ii) Where necessary, the test substance is dissolved or suspended in a suitable vehicle. It is recommended that, wherever possible, the use of an aqueous solution/suspension be considered first, followed by consideration of a solution/emulsion in oil (e.g., corn oil) and then by possible solution in other vehicles. For vehicles other than water the toxic characteristics of the vehicle must be known. The stability of the test substance in the vehicle should be determined.

(f) *Procedure*—(1) *Number and sex of animals.* It is recommended that each group be started with at least 10 animals of each sex. Except in the case of

marked toxic effects, it is expected that this will provide at least 8 pregnant females per group which normally is the minimum acceptable number of pregnant females per group. The objective is to produce enough pregnancies and offspring to assure a meaningful evaluation of the potential of the substance to affect fertility, pregnancy, maternal and suckling behaviour, and growth and development of the F_1 offspring from conception to day 4 post-partum.

(2) *Dosage.* (i) Generally, at least three test groups and a control group should be used. Dose levels may be based on information from acute toxicity tests or on results from repeated dose studies. Except for treatment with the test substance, animals in the control group should be handled in an identical manner to the test group subjects. If a vehicle is used in administering the test substance, the control group should receive the vehicle in the highest volume used.

(ii) Dose levels should be selected taking into account any existing toxicity and (toxico-) kinetic data available for the test compound or related materials. The highest dose level should be chosen with the aim of inducing toxic effects but not death or severe suffering. Thereafter, a descending sequence of dose levels should be selected in order to demonstrate any dose response relationships and no adverse effects at the lowest dose level. Two to four fold intervals are frequently optimal for setting the descending dose levels and addition of a fourth test group is often preferable to using very large intervals (e.g., more than a factor of 10) between dosages.

(3) *Limit test.* If an oral study at one dose level of at least 1000 mg/kg body weight/day or, for dietary or drinking water administration, an equivalent percentage in the diet, or drinking water using the procedures described for this study, produces no observable toxic effects and if toxicity would not be expected based upon data from structurally related compounds, then a full study using several dose levels may not be considered necessary. The limit test applies except when human exposure indicates the need for a higher oral dose level to be used. For other types of administration, such as inhalation or dermal application, the physical chemical properties of the test substance often may dictate the maximum attainable concentration.

(4) *Administration of doses.* (i) The animals must be dosed with the test substance daily for seven days a week. When the test substance is administered by gavage, this should be done in a single dose to the animals using a stomach tube or a suitable intubation cannula. The maximum volume of liquid that can be administered at one time depends on the size of the test animal. The volume should not exceed 1 ml/100 g body weight, except in the case of aqueous solutions where 2 ml/100 g body weight may be used. Except for irritating substances which will normally reveal exacerbated effects with higher concentrations, variability in test volume should be minimized by adjusting the concentration to ensure a constant volume at all dose levels.

(ii) For substances administered via the diet or drinking water, it is important to ensure that the quantities of the test substance involved do not interfere with normal nutrition or water balance. When the test substance is administered in the diet either a constant dietary concentration (parts per million (ppm)) or a constant dose level in terms of the animals' body weight may be used; the alternative used must be specified. For a substance administered by gavage, the dose should be given at similar times each day, and adjusted at least weekly to maintain a constant dose level in terms of animal body weight.

(5) *Experimental schedule.* (i) Dosing of both sexes should begin at least 2 weeks prior to mating, after they have been acclimatized for at least five days. The study should be scheduled in such a way that mating begins soon after the animals have attained full sexual maturity. This may vary slightly for different strains of rats in different laboratories, e.g., Sprague Dawley rats 10 weeks of age, Wistar rats about 12 weeks of age. Dams with offspring should be sacrificed on day 4 post-partum, or shortly thereafter. The day of birth (viz. when parturition is complete) is defined as day 0 post-partum. Females showing no-evidence

of copulation are sacrificed 24–26 days after the last day of the mating period. Dosing is continued in both sexes during the mating period. Males should further be dosed after the mating period at least until the minimum total dosing period of 28 days has been completed. They are then sacrificed, or, alternatively, are retained and continued to be dosed for the possible conduction of a second mating if considered appropriate.

(ii) Daily dosing of the parental females should continue throughout pregnancy and at least up to, and including, day 3 post-partum or the day before sacrifice. For studies where the test substance is administered by inhalation or by the dermal route, dosing should be continued at least up to, and including, day 19 of gestation.

(iii) The experimental schedule is given in the following figure 1.

FIGURE 1

DIAGRAM OF THE EXPERIMENTAL SCHEDULE INDICATING THE MAXIMUM STUDY DURATION, BASED ON A FULL 14-DAY MATING PERIOD

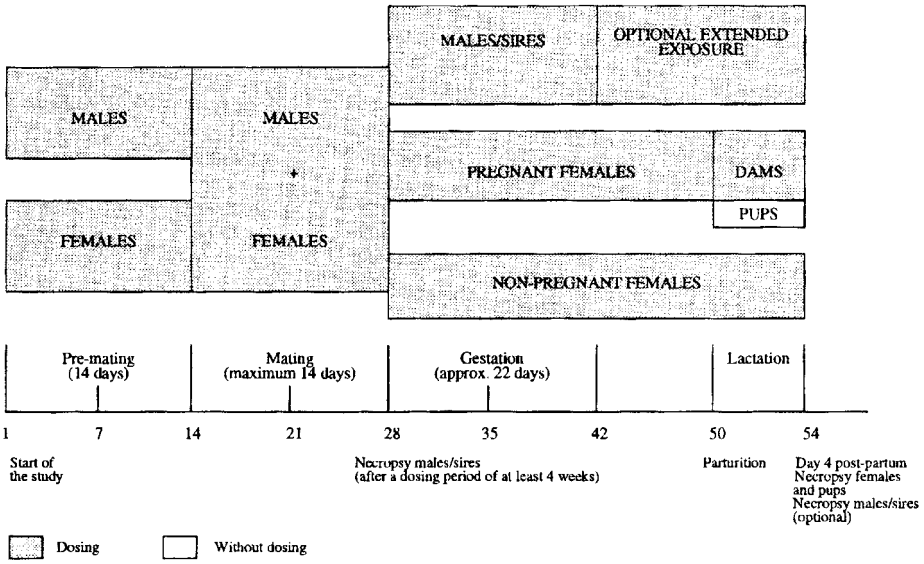

(6) *Mating procedure.* Normally, 1:1 (one male to one female) matings should be used in this study. Exceptions can arise in the case of occasional deaths of males. The female should be placed with the same male until pregnancy occurs or two weeks have elapsed. Each morning the females should be examined for the presence of sperm or a vaginal plug. Day 0 of pregnancy is defined as the day a vaginal plug or sperm is found.

(7) *Observations.* (i) Throughout the test period, general clinical observations should be made at least once a day, and more frequently when signs of toxicity are observed. They should be made preferably at the same time(s) each day, considering the peak period of anticipated effects after dosing. Pertinent behavioural changes, signs of difficult or prolonged parturition and all signs of toxicity, including mortality, should be recorded. These records should include time of onset, degree and duration of toxicity signs.

(ii) The duration of gestation should be recorded and is calculated from day 0 of pregnancy. Each litter should be

examined as soon as possible after delivery to establish the number and sex of pups, stillbirths, live births, runts (pups that are significantly smaller than corresponding control pups) and the presence of gross abnormalities.

(iii) Live pups should be counted and sexed and litters weighed within 24 hours of parturition (day 1) and on day 4 post-partum. In addition to the observations on parent animals, described by paragraph (f)(7) of this section, any abnormal behaviour of the offspring should be recorded.

(8) *Body weight and food/water consumption*. (i) Males and females should be individually weighed on the first day of dosing, at least weekly thereafter, and at termination. During pregnancy, females should be weighed on days 0, 7, 14 and 20 and within 24 hours of parturition (day 1) and day 4 post-partum.

(ii) During pre-mating, pregnancy and lactation, food consumption should be measured at least weekly. The measurement of food consumption during mating is optional. Water consumption during these periods should also be measured when the test substance is administered via drinking water.

(9) *Pathology*—(i) *Gross necropsy*. (A) At the time of sacrifice or death during the study, the adult animals should be examined macroscopically for any abnormalities or pathological changes. Special attention should be paid to the organs of the reproductive system. The number of implantation sites should be recorded. Corpora lutea should be counted.

(B) The testes and epididymides of all male adult animals should be weighed.

(C) Dead pups and pups sacrificed at day 4 post-partum, or shortly thereafter, should, at least, be carefully examined externally for gross abnormalities.

(D) The ovaries, testes, epididymides, accessory sex organs and all organs showing macroscopic lesions of all adult animals should be preserved. Formalin fixation is not recommended for routine examination of testes and epididymides. An acceptable method is the use of Bouin's fixative for these tissues.

(ii) *Histopathology*. (A) Detailed histological examination should be performed on the ovaries, testes and epididymides of the animals of the highest dose group and the control group. The other preserved organs may be examined when necessary. Examinations should be extended to the animals of other dosage groups when changes are seen in the highest dose group.

(B) Detailed testicular histopathological examination (e.g., using Bouin's fixative, paraffin embedding and transverse sections of 4-5 ±m thickness) should be conducted with special emphasis on stages of spermatogenesis and histopathology interstitial testicular cell structure. The evaluation should identify treatment-related effects such as retained spermatids, missing germ cell layers or types, multinucleated giant cells or sloughing of spermatogenic cells into the lumen (the specifications for the evaluation are discussed in paragraph (g)(2) of this section). Examination of the intact epididymis should include the caput, corpus, and cauda, which can be accomplished by evaluation of a longitudinal section. The epididymis should be evaluated for leukocyte infiltration, change in prevalence of cell types, aberrant cell types, and phagocytosis of sperm. PAS and hematoxylin staining may be used for examination of the male reproductive organs. Histopathological examination of the ovary should detect qualitative depletion of the primordial follicle population.

(g) *Data and reporting*—(1) *Data*. Individual animal data should be provided. Additionally, all data should be summarised in tabular form, showing for each test group the number of animals at the start of the test, the number of animals found dead during the test or sacrificed for humane reasons, the time of any death or humane sacrifice, the number of fertile animals, the number of pregnant females, the number of animals showing signs of toxicity, a description of the signs of toxicity observed, including time of onset, duration, and severity of any toxic effects, the types of histopathological changes, and all relevant litter data.

(2) *Evaluation of results*. (i) The findings of this toxicity study should be

evaluated in terms of the observed effects, necropsy and microscopic findings. This evaluation must include the relationship between the dose of the test substance and the presence or absence, incidence and severity of abnormalities, including gross lesions, identified target organs, infertility, clinical abnormalities, affected reproductive and litter performance, body weight changes, effects on mortality and any other toxic effects.

(ii) Because of the short period of treatment of the male, the histopathology of the testis and epididymus must be considered along with the fertility data, when assessing male reproductive effects.

(iii) Due to the limited dimensions of the study, statistical analysis in the form of tests for ''significance'' are of limited value for many endpoints, especially reproductive endpoints. If statistical analyses are used then the method chosen should be appropriate for the distribution of the variable examined, and be selected prior to the start of the study. Because of the small group size, the use of historic control data (e.g., for litter size), where available, may also be useful as an aid to the interpretation of the study.

(3) *Test report*. The test report must include the following information:

(i) Test substance:

(A) Physical nature and, where relevant, physicochemical properties.

(B) Identification data.

(ii) Vehicle (if appropriate): Justification for choice of vehicle if other than water.

(iii) Test animals:

(A) Species/strain used.

(B) Number, age and sex of animals.

(C) Source, housing conditions, diet, etc.

(D) Individual weights of animals at the start of the test.

(iv) Test conditions:

(A) Rationale for dose level selection.

(B) Details of test substance formulation/diet preparation, achieved concentrations, stability and homogeneity of the preparation.

(C) Details of the administration of the test substance.

(D) Conversion from diet/drinking water test substance concentration (parts per million (ppm)) to the actual dose (mg/kg body weight/day), if applicable.

(E) Details of food and water quality.

(v) Results (toxic response data by sex and dose):

(A) Time of death during the study or whether animals survived to termination.

(B) Nature, severity and duration of clinical observations (whether reversible or not).

(C) Body weight/body weight change data.

(D) Food consumption and water consumption, if applicable.

(E) Effects on reproduction, including information on mating/precoital interval, fertility, fecundity and gestation duration.

(F) Effects on offspring, including number of pups born (live and dead), sex ratio, postnatal growth (pup weights) and survival (litter size), gross abnormalities and clinical observations during lactation.

(G) Body weight at termination and organ weight data for the parental animals.

(H) Necropsy data, including number of implantations and number of corpora lutea.

(I) Calculations of pre- and postimplantation loss.

(J) Detailed description of histopathological findings.

(K) Statistical treatment of results, where appropriate.

(vi) Discussion of results.

(vii) Conclusions.

(4) *Interpretation of results*. The study will provide evaluations of reproduction/developmental toxicity associated with administration of repeated doses. It could provide an indication of the need to conduct further investigations and provides guidance in the design of subsequent studies.

(h) *References*. For additional background information on this test guideline, the following references should be consulted. These references are available for inspection at the TSCA Nonconfidential Information Center, Rm. NE–B607, Environmental Protection Agency, 401 M St., SW., Washington, DC, 12 noon to 4 p.m., Monday through Friday, except legal holidays.

(1) OECD (1995). Reproduction/Developmental Toxicity Screening Test, OECD 421, OECD Guidelines for Testing of Chemicals.

(2) [Reserved]

[65 FR 78789, Dec. 15, 2000]

§ 799.9365 TSCA combined repeated dose toxicity study with the reproduction/developmental toxicity screening test.

(a) *Scope*—(1) *Applicability*. This section is intended to meet testing requirements of the Toxic Substances Control Act (TSCA) (15 U.S.C. 2601).

(2) *Source*. The source material used in developing this TSCA test guideline is the Office of Prevention, Pesticides and Toxic Substances (OPPTS) harmonized test guideline 870.3650 (July 2000, final guidelines). This source is available at the address in paragraph (h) of this section.

(b) *Purpose*. (1) This screening test provides limited information on systemic toxicity, neurotoxicity, and/or immunotoxicity following repeated exposure over a limited time period. In addition, it can be used to provide initial information on possible effects on male and female reproductive performance such as gonadal function, mating behavior, conception, development of the conceptus, and parturition. It is not an alternative to, nor does it replace, the existing test guidelines in §§ 799.9370, 799.9380, 799.9620, and 799.9780 of this part.

(2) This test does not provide complete information on all aspects of reproduction and development. In particular, it offers only limited means of detecting postnatal manifestations of prenatal exposure, or effects that may be induced during postnatal exposure. Due (amongst other reasons) to the selectivity of the end points, and the short duration of the study, this method will not provide evidence for definite claims of no reproduction/developmental effects.

(3) This test can be used to provide initial information either at an early stage of assessing the toxicological properties of chemicals, or chemicals of high concern. It can also be used as part of a set of initial screening tests for existing chemicals for which little or no toxicological information is available or when otherwise considered relevant. It also can serve as an alternative to conducting two separate screening tests for repeated dose toxicity as described in § 799.9305 of this part and reproductive/developmental toxicity as described in § 799.9355 of this part.

(c) *Definitions*. The definitions in section 3 of TSCA and in 40 CFR Part 792—Good Laboratory Practice Standards apply to this section. The following definitions also apply to this section.

Dosage is a general term comprising dose, its frequency and the duration of dosing.

Dose is the amount of test substance administered. Dose is expressed as weight (g, gm) or as weight of test substance per unit weight of test animal (e.g., mg/kg), or as constant dietary concentration (parts per million (ppm)).

No-observed-effects level (NOEL) is the maximum dose used in a study which produces no adverse effects. The NOEL is expressed in terms of the weight of a test substance given daily per unit weight of test animal (milligrams per kilogram per day).

(d) *Principle of the test*. (1) The test substance must be administered in graduated doses to several groups of males and females. Males should be dosed for a minimum of 4 weeks, up to and including the day before scheduled sacrifice (this includes a minimum of 2 weeks prior to mating, during the mating period and, approximately, 2 weeks post mating). In view of the limited pre-mating dosing period in males, fertility may not be a particularly sensitive indicator of testicular toxicity. Therefore, a detailed histological examination of the testes is essential. The combination of a pre-mating dosing period of 2 weeks and subsequent mating/fertility observations with an overall dosing period of at least 4 weeks, followed by detailed histopathology of the male gonads, is considered sufficient to enable detection of the majority of effects on male fertility and spermatogenesis.

(2) Females should be dosed throughout the study. This includes 2 weeks prior to mating (with the objective of covering at least two complete oestrous cycles), the variable time to conception, the duration of pregnancy and at least 4 days after delivery, up to and including the day before scheduled sacrifice.

(3) Duration of study, following acclimatization, is dependent on the female performance and is approximately 54 days, (at least 14 days pre-mating, (up to) 14 days mating, 22 days gestation, 4 days lactation).

(4) During the period of administration, the animals are observed closely each day for signs of toxicity. Animals which die or are sacrificed during the test are necropsied and, at the conclusion of the test, surviving animals are sacrificed and necropsied.

(e) *Description of the method*—(1) *Selection of animal species.* This test guideline is designed for use with the rat. If other species are used, appropriate modifications will be necessary. Strains with low fecundity or well-known high incidence of developmental defects should not be used. Healthy virgin animals, not subjected to previous experimental procedures, should be used. The test animals should be characterised as to species, strain, sex, weight and/or age. At the commencement of the study the weight variation of animals used should be minimal and not exceed ± 20% of the mean weight of each sex. Where the study is conducted as a preliminary study to a long-term or a full-generation study, preferably animals from the same strain and source should be used in both studies.

(2) *Housing and feeding conditions.* (i) The temperature in the experimental animal room should be 22 °C (± 3°). The relative humidity should be at least 30% and preferably not exceed 70% other than during room cleaning. Lighting should be artificial, the sequence being 12 hours light, 12 hours dark. For feeding, conventional laboratory diets may be used with an unlimited supply of drinking water. The choice of diet may be influenced by the need to ensure a suitable admixture of a test substance when administered by this method.

(ii) Animals may be housed individually or be caged in small groups of the same sex; for group caging, no more than five animals should be housed per cage. Mating procedures should be carried out in cages suitable for the purpose. Pregnant females should be caged individually and provided with nesting materials.

(3) *Preparation of the animals.* Healthy young adult animals must be randomised and assigned to the treatment groups and cages. Cages should be arranged in such a way that possible effects due to cage placements are minimized. The animals must be uniquely identified and kept in their cages for at least 5 days prior to the start of the study to allow for acclimatisation to the laboratory conditions.

(4) *Preparation of doses.* (i) It is recommended that the test substance be administered orally unless other routes of administration are considered more appropriate. When the oral route is selected, the test compound is usually administered by gavage; however, alternatively, test compounds may also be administered via the diet or drinking water.

(ii) Where necessary, the test substance is dissolved or suspended in a suitable vehicle. It is recommended that, wherever possible, the use of an aqueous solution/suspension be considered first, followed by consideration of a solution/emulsion in oil (e.g., corn oil) and then by possible solution in other vehicles. For non-aqueous vehicles the toxic characteristics of the vehicle must be known. The stability of the test substance in the vehicle should be determined.

(f) *Procedure*—(1) *Number and sex of animals.* It is recommended that each group be started with at least 10 animals of each sex. Except in the case of marked toxic effects, it is expected that this will provide at least eight pregnant females per group which normally is the minimum acceptable number of pregnant females per group. The objective is to produce enough pregnancies and offspring to assure a meaningful evaluation of the potential of the substance to affect fertility, pregnancy, maternal and suckling behaviour, and growth and development of the F_1 offspring from conception to day 4 post-partum. If interim sacrifices are planned, the number should be increased by the number of animals scheduled to be sacrificed before the completion of the study. Consideration should be given to an additional satellite group of five animals per sex in the control and the top dose group for

observation of reversibility, persistence or delayed occurrence of systemic toxic effects, for at least 14 days post treatment. Animals of the satellite groups must not be mated and, consequently, must not used for the assessment of reproduction/developmental toxicity.

(2) *Dosage.* (i) Generally, at least three test groups and a control group should be used. If there are no suitable general toxicity data available, a range finding study may be performed to aid the determination of the doses to be used. Except for treatment with the test substance, animals in the control group should be handled in an identical manner to the test group subjects. If a vehicle is used in administering the test substance, the control group should receive the vehicle in the highest volume used.

(ii) Dose levels should be selected taking into account any existing toxicity and (toxico-) kinetic data available for the test compound or related materials. It should also be taken into account that there may be differences in sensitivity between pregnant and non-pregnant animals. The highest dose level should be chosen with the aim of inducing toxic effects but not death nor obvious suffering. Thereafter, a descending sequence of dose levels should be selected with a view to demonstrating any dosage related response and no adverse effects at the lowest dose level. Two- to four-fold intervals are frequently optimum and addition of a fourth test group is often preferable to using very large intervals (e.g., more than a factor of 10) between dosages.

(3) *Limit test.* If an oral study at 1-dose level of at least 1000 mg/kg body weight/day or, for dietary administration, an equivalent percentage in the diet, or drinking water (based upon body weight determinations), using the procedures described for this study, produces no observable toxic effects and if toxicity would not be expected based upon data from structurally related compounds, then a full study using several dose levels may not be considered necessary. The limit test applies except when human exposure indicates the need for a higher dose level to be used. For other types of administration, such as inhalation or dermal application, the physical chemical properties of the test substance often may dictate the maximum attainable exposure.

(4) *Administration of doses.* (i) The animals are dosed with the test substance daily for 7 days a week. When the test substance is administered by gavage, this should be done in a single dose to the animals using a stomach tube or a suitable intubation cannula. The maximum volume of liquid that can be administered at one time depends on the size of the test animal. The volume should not exceed 1 ml/100 g body weight, except in the case of aqueous solutions where 2 ml/100 g body weight may be used. Except for irritating or corrosive substances which will normally reveal exacerbated effects with higher concentrations, variability in test volume should be minimized by adjusting the concentration to ensure a constant volume at all dose levels.

(ii) For substances administered via the diet or drinking water, it is important to ensure that the quantities of the test substance involved do not interfere with normal nutrition or water balance. When the test substance is administered in the diet either a constant dietary concentration (parts per million (ppm)) or a constant dose level in terms of the animals' body weight may be used; the alternative used must be specified. For a substance administered by gavage, the dose should be given at similar times each day, and adjusted at least weekly to maintain a constant dose level in terms of animal body weight.

(5) *Experimental schedule.* (i) Dosing of both sexes should begin 2 weeks prior to mating, after they have been acclimatized for at least 5 days. The study should be scheduled in such a way that mating begins soon after the animals have attained full sexual maturity. This may vary slightly for different strains of rats in different laboratories, e.g., Sprague Dawley rats 10 weeks of age, Wistar rats about 12 weeks of age. Dams with offspring should be sacrificed on day 4 post-partum, or shortly thereafter. In order to allow for overnight fasting of dams prior to blood collection (if this option is preferred),

dams and their offspring need not necessarily be sacrificed on the same day. The day of birth (viz. when parturition is complete) is defined as day 0 post-partum. Females showing no-evidence of copulation are sacrificed 24–26 days after the last day of the mating period. Dosing is continued in both sexes during the mating period. Males should further be dosed after the mating period at least until the minimum total dosing period of 28 days has been completed. They are then sacrificed, or, alternatively, are retained and continued to be dosed for the possible conduction of a second mating if considered appropriate.

(ii) Daily dosing of the parental females should continue throughout pregnancy and at least up to, and including, day 3 post-partum or the day before sacrifice. For studies where the test substance is administered by inhalation or by the dermal route, dosing should be continued at least up to, and including, day 19 of gestation.

(iii) Animals in a satellite group scheduled for follow-up observations, if included, must not mated. They should be kept at least for a further 14 days after the first scheduled sacrifice of dams, without treatment to detect delayed occurrence, or persistence of, or recovery from toxic effects.

(iv) The experimental schedule is given in the following figure 1.

Figure 1

DIAGRAM OF THE EXPERIMENTAL SCHEDULE, INDICATING THE MAXIMUM STUDY DURATION, BASED ON A FULL 14-DAY MATING PERIOD

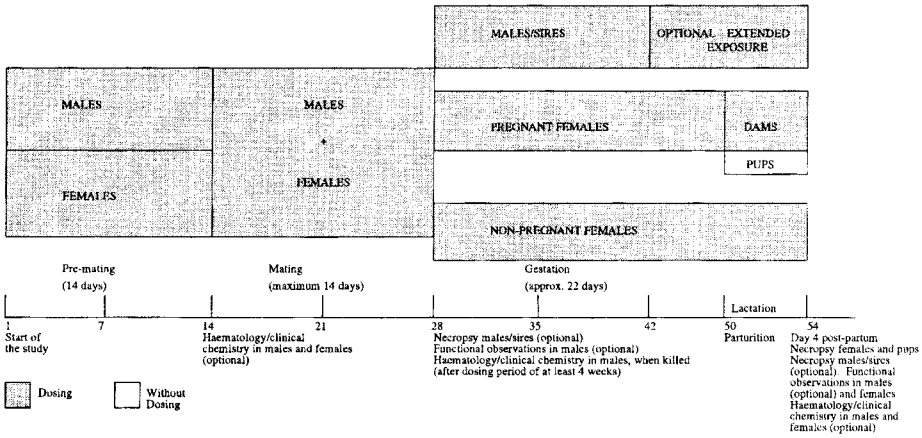

(6) *Mating procedure.* Normally, 1:1 (one male to one female) matings should be used in this study. Exceptions can arise in the case of occasional deaths of males. The female should be placed with the same male until pregnancy occurs or 2 weeks have elapsed. Each morning the females should be examined for the presence of sperm or a vaginal plug. Day 0 of pregnancy is defined as the day a vaginal plug or sperm is found. In case pairing was unsuccessful, re-mating of females with proven males of the same group could be considered.

(7) *Observations.* (i) General clinical observations should be made at least once a day, preferably at the same time(s) each day and considering the peak period of anticipated effects after dosing. The health condition of the animals should be recorded. At least twice daily all animals must be observed for morbidity and mortality.

(ii) Once before the first exposure (to allow for within-subject comparisons),

and at least once a week thereafter, detailed clinical observations should be made in all animals. These observations should be made outside the home cage in a standard arena and preferably at the same time, each day. They should be carefully recorded; preferably using scoring systems, explicitly defined by the testing laboratory. Effort should be made to ensure that variations in the test conditions are minimal and that observations are preferably conducted by observers unaware of the treatment. Signs noted should include, but not be limited to, changes in skin, fur, eyes, mucous membranes, occurrence of secretions and excretions and autonomic activity (e.g., lacrimation, piloerection, pupil size, unusual respiratory pattern). Changes in gait, posture and response to handling as well as the presence of clonic or tonic movements, stereotypies (e.g., excessive grooming, repetitive circling), difficult or prolonged parturition or bizarre behaviour (e.g., self-mutilation, walking backwards) should also be recorded.

(iii) At one time during the study, sensory reactivity to stimuli of different modalities (e.g., auditory, visual and proprioceptive stimuli) assessment of grip strength and motor activity assessment should be conducted in five males and five females, randomly selected from each group. Further details of the procedures that could be followed are given in the respective references. However, alternative procedures than those referenced could also be used. In males, these functional observations should be made towards the end of their dosing period, shortly before scheduled sacrifice but before blood sampling for hematology or clinical chemistry. Females should be in a physiologically similar state during these functional tests and should preferably be tested during lactation, shortly before scheduled sacrifice. In order to avoid hypothermia of pups, dams should be removed from the pups for not more than 30 to 40 minutes. Examples of procedures for observation are described in the references in paragraphs (h)(3), (h)(4), (h)(5), (h)(6), and (h)(7) of this section.

(iv) Functional observations made once towards the end of the study may be omitted when the study is conducted as a preliminary study to a subsequent subchronic (90-day) or long-term study. In that case, the functional observations should be included in this follow-up study. On the other hand, the availability of data on functional observations from this repeated dose study may enhance the ability to select dose levels for a subsequent subchronic or long-term study.

(v) Functional observations may also be omitted for groups that otherwise reveal signs of toxicity to an extent that would significantly interfere with the functional test performance.

(vi) The duration of gestation should be recorded and is calculated from day 0 of pregnancy. Each litter should be examined as soon as possible after delivery to establish the number and sex of pups, stillbirths, live births, runts (pups that are significantly smaller than corresponding control pups), and the presence of gross abnormalities.

(vii) Live pups should be counted and sexed and litters weighed within 24 hours of parturition (day 0 or 1 post-partum) and on day 4 post-partum. In addition to the observations on parental animals, described by paragraphs (f)(7)(ii) and (f)(7)(iii) of this section, any abnormal behaviour of the offspring should be recorded.

(8) *Body weight and food/water consumption*. (i) Males and females should be weighed on the first day of dosing, at least weekly thereafter, and at termination. During pregnancy, females should be weighed on days 0, 7, 14 and 20 and within 24 hours of parturition (day 0 or 1 post-partum), and day 4 post-partum. These observations should be reported individually for each adult animal.

(ii) During pre-mating, pregnancy and lactation, food consumption should be measured at least weekly. The measurement of food consumption during mating is optional. Water consumption during these periods should also be measured, when the test substance is administered by that medium.

(9) *Hematology*. (i) Once during the study, the following hematological examinations should be made in five males and five females randomly selected from each group: hematocrit, hemoglobin concentration, erythrocyte

count, total and differential leucocyte count, platelet count and a measure of blood clotting time/potential.

(ii) Blood samples should be taken from a named site. Females should be in a physiologically similar state during sampling. In order to avoid practical difficulties related to the variability in the onset of gestation, blood collection in females may be done at the end of the pre-mating period as an alternative to sampling just prior to, or as part of, the procedure for sacrificing the animals. Blood samples of males should preferably be taken just prior to, or as part of, the procedure for sacrificing the animals. Alternatively, blood collection in males may also be done at the end of the pre-mating period when this time point was preferred for females.

(iii) Blood samples should be stored under appropriate conditions.

(10) *Clinical biochemistry*. (i) Clinical biochemistry determinations to investigate major toxic effects in tissues and, specifically, effects on kidney and liver, should be performed on blood samples obtained from the selected five males and five females of each group. Overnight fasting of the animals prior to blood sampling is recommended[1]. Investigations of plasma or serum must include sodium, potassium, glucose, total cholesterol, urea, creatinine, total protein and albumin, at least two enzymes indicative of hepatocellular effects (such as alanine aminotransferase, aspartate aminotransferase and sorbitol dehydrogenase) and bile acids. Measurements of additional enzymes (of hepatic or other origin) may provide useful information under certain circumstances.

(ii) Optionally, the following urinalysis determinations could be performed in five randomly selected males of each group during the last week of the study using timed urine volume collection; appearance, volume, osmolality or specific gravity, pH, protein, glucose and blood or blood cells.

(iii) In addition, studies to investigate serum markers of general tissue damage should be considered. Other determinations that should be carried out if the known properties of the test substance may, or are suspected to, affect related metabolic profiles include calcium, phosphate, fasting triglycerides and fasting glucose, specific hormones, methemoglobin and cholinesterase. These need to be identified on a case-by-case basis.

(iv) Overall, there is a need for a flexible approach, depending on the observed and/or expected effect with a given compound.

(v) If historical baseline data are inadequate, consideration should be given to determination of hematological and clinical biochemistry variables before dosing commences.

(11) *Pathology*—(i) *Gross necropsy*. (A) All adult animals in the study must be subjected to a full, detailed gross necropsy which includes careful examination of the external surface of the body, all orifices, and the cranial, thoracic and abdominal cavities and their contents. Special attention should be paid to the organs of the reproductive system. The number of implantation sites should be recorded. Corpora lutea should be counted.

(B) The testes and epididymides of all adult males should be weighed and the ovaries, testes, epididymides, accessory sex organs, and all organs showing macroscopic lesions of all adult animals, should be preserved.

(C) In addition, for five adult males and females, randomly selected from each group, the liver, kidneys, adrenals, thymus, spleen, brain and heart should be trimmed of any adherent tissue, as appropriate and their wet weight taken as soon as possible after dissection to avoid drying. Of the selected males and females, the following

[1] For a number of measurements in serum and plasma, most notably for glucose, overnight fasting would be preferable. The major reason for this preference is that the increased variability which would inevitably result from non-fasting, would tend to mask more subtle effects and make interpretation difficult. On the other hand, however, overnight fasting may interfere with the general metabolism of the (pregnant) animals, disturbs lactation and nursing behaviour, and, particularly in feeding studies, may disturb the daily exposure to the test substance. If overnight fasting is adopted, clinical biochemical determinations should be performed after the conduct of functional observations in week 4 of the study.

tissues should also be preserved in the most appropriate fixation medium for both the type of tissue and the intended subsequent histopathological examination: all gross lesions, brain (representative regions including cerebrum, cerebellum and pons), spinal cord, stomach, small and large intestines (including Peyer's patches), liver, kidneys, adrenals, spleen, heart, thymus, thyroid, trachea and lungs (preserved by inflation with fixative and then immersion), uterus, urinary bladder, lymph nodes (preferably 1 lymph node covering the route of administration and another one distant from the route of administration to cover systemic effects), peripheral nerve (sciatic or tibial) preferably in close proximity to the muscle, and a section of bone marrow (or, alternatively, a fresh mounted marrow aspirate).

(D) Formalin fixation is not recommended for routine examination of testes and epididymides. An acceptable method is the use of Bouin's fixative for these tissues. The clinical and other findings may suggest the need to examine additional tissues. Also, any organs considered likely to be target organs based on the known properties of the test substance should be preserved.

(E) Dead pups and pups sacrificed at day 4 post-partum, or shortly thereafter, should, at least, be carefully examined externally for gross abnormalities.

(ii) *Histopathology*. (A) Full histopathology should be conducted on the preserved organs and tissues of the selected animals in the control and high dose groups and all gross lesions. These examinations should be extended to animals of other dosage groups if treatment-related changes are observed in the high dose group.

(B) Detailed testicular histopathological examination (e.g., using Bouin's fixative, paraffin embedding and transverse sections of 4–5 ±m thickness) should be conducted with special emphasis on stages of spermatogenesis and histopathology interstitial testicular cell structure. The evaluation should identify treatment-related effects such as retained spermatids, missing germ cell layers or types, multinucleated giant cells or sloughing of spermatogenic cells into the lumen (the specifications for the evaluation are discussed in paragraph (g)(2) of this section). Examination of the intact epididymis should include the caput, corpus, and cauda, which can be accomplished by evaluation of a longitudinal section. The epididymis should be evaluated for leukocyte infiltration, change in prevalence of cell types, aberrant cell types, and phagocytosis of sperm. Periodic acid-Schiff (PAS) and hematoxylin staining may be used for examination of the male reproductive organs. Histopathological examination of the ovary should detect qualitative depletion of the primordial follicle population.

(C) When a satellite group is used, histopathology should be performed on tissues and organs identified as showing effects in the treated groups.

(g) *Data and reporting*—(1) *Data*. Individual animal data should be provided. Additionally, all data should be summarised in tabular form, showing for each test group the number of animals at the start of the test, the number of animals found dead during the test or sacrificed for humane reasons, the time of any death or humane sacrifice, the number of fertile animals, the number of pregnant females, the number of animals showing signs of toxicity, a description of the signs of toxicity observed, including time of onset, duration, and severity of any toxic effects, the types of histopathological changes, and all relevant litter data.

(2) *Evaluation of results*. (i) The findings of this toxicity study should be evaluated in terms of the observed effects, necropsy and microscopic findings. The evaluation will include the relationship between the dose of the test substance and the presence or absence, incidence and severity of abnormalities, including gross lesions, identified target organs, infertility, clinical abnormalities, affected reproductive and litter performance, body weight changes, effects on mortality and any other toxic effects.

(ii) Because of the short period of treatment of the male, the histopathology of the testes and epididymides must be considered along with the fertility data, when assessing male reproduction effects. The use of

historic control data on reproduction/development (e.g. for litter size) where available may also be useful as an aid to the interpretation of the study.

(iii) When possible, numerical results should be evaluated by an appropriate and general acceptable statistical method. The statistical methods should be selected during the design of the study. Due to the limited dimensions of the study, statistical analysis in the form of tests for ''significance'' are of limited value for many endpoints, especially reproductive endpoints. Some of the most widely used methods, especially parametric tests for measures of central tendency, are inappropriate. If statistical analyses are used then the method chosen should be appropriate for the distribution of the variable examined and be selected prior to the start of the study.

(3) *Test report*. The test report must include the following information:

(i) Test substance:

(A) Physical nature and, where relevant, physicochemical properties.

(B) Identification data.

(ii) Vehicle (if appropriate): Justification for choice of vehicle, if other than water.

(iii) Test animals:

(A) Species/strain used.

(B) Number, age and sex of animals.

(C) Source, housing conditions, diet, etc.

(D) Individual weights of animals at the start of the test.

(iv) Test conditions:

(A) Rationale for dose level selection.

(B) Details of test substance formulation/diet preparation, achieved concentration, stability and homogeneity of the preparation.

(C) Details of the administration of the test substance.

(D) Conversion from diet/drinking water test substance concentration (parts per mission (ppm)) to the actual dose (mg/kg body weight/day), if applicable.

(E) Details of food and water quality.

(v) Results (toxic response data by sex and dose):

(A) Time of death during the study or whether animals survived to termination.

(B) Nature, severity and duration of clinical observations (whether reversible or not).

(C) Body weight/body weight change data.

(D) Food consumption and water consumption, if applicable.

(E) Sensory activity, grip strength and motor activity assessments.

(F) Hematological tests with relevant baseline values,

(G) Clinical biochemistry tests with relevant baseline values.

(H) Effects on reproduction, including information on mating/precoital interval, fertility, fecundity and gestation duration.

(I) Effects on offspring, including number of pups born (live and dead), sex ratio, postnatal growth (pup weights) and survival (litter size), gross abnormalities and clinical observations during lactation.

(J) Body weight at termination and organ weight data for the parental animals.

(K) Necropsy data, including number of implantations and number of corpora lutea.

(L) Calculations of pre- and postimplantation loss.

(M) Detailed description of histopathological findings.

(N) Statistical treatment of results, where appropriate.

(vi) Discussion of results.

(vii) Conclusions.

(h) *References*. For additional background information on this test guideline, the following references should be consulted. These references are available for inspection at the TSCA Nonconfidential Information Center, Rm. NE–B607, Environmental Protection Agency, 401 M St., NW., Washington, DC, 12 noon to 4 p.m., Monday through Friday, except legal holidays.

(1) Mitsumori, K., Kodama, Y., Uchida, O., Takada, K., Saito, M. Naito, K., Tanaka, S., Kurokawa, Y., Usami, M., Kawashima, K., Yasuhara, K., Toyoda, K., Onodera, H., Furukawa, F., Takahashi, M. and Hayashi, Y., (1994). Confirmation Study, Using Nitro-Benzene, of the Combined Repeat Dose and Reproductive/ Developmental Toxicity Test Protocol Proposed by the Organization for Economic Cooperation and Development (OECD). *Journal of Toxicology and Science*, 19:141–149.

(2) Tanaka, S., Kawashima, K., Naito, K., Usami, M., Nakadate, M., Imaida, K.,

Takahashi, M., Hayashi, Y., Kurokawa, Y. and Tobe, M. (1992). Combined Repeat Dose and Reproductive/Developmental Toxicity Screening Test (OECD): Familiarization Using Cyclophosphamide. *Fundamental and Applied Toxicology*, 18:89–95.

(3) Tupper D.E., Wallace R.B. (1980). Utility of the Neurologic Examination in Rats. *Acta Neurobiological Exposure*, 40:999–1003.

(4) Gad S.C. (1982). A Neuromuscular Screen for Use in Industrial Toxicology. *Journal of Toxicology and Environmental Health*, 9:691–704.

(5) Moser V.C., McDaniel K.M., Phillips P.M. (1991). Rat Strain and Stock Comparisons Using a Functional Observational Battery: Baseline Values and Effects of Amitraz. *Toxicology and Applied Pharmacology*, 108:267–283.

(6) Meyer O.A., Tilson H.A., Byrd W.C., Riley M.T. (1979). A Method for the Routine Assessment of Fore- and Hindlimb Grip Strength of Rats and Mice. *Neurobehavorial Toxicology*, 1:233–236.

(7) Crofton K.M., Howard J.L., Moser V.C., Gill M.W., Reiter L.W., Tilson H.A., MacPhail R.C. (1991). Interlaboratory Comparison of Motor Activity Experiments: Implication for Neurotoxicological Assessments. *Neurotoxicology and Teratology* 13:599–609.

[65 FR 78793, Dec. 15, 2000]

§ 799.9370 TSCA prenatal developmental toxicity.

(a) *Scope* This section is intended to meet the testing requirements under section 4 of TSCA. This guideline for developmental toxicity testing is designed to provide general information concerning the effects of exposure on the pregnant test animal and on the developing organism; this may include death, structural abnormalities, or altered growth and an assessment of maternal effects. For information on testing for functional deficiencies and other postnatal effects, the guidelines for the two-generation reproductive toxicity study and the developmental neurotoxicity study should be consulted.

(b) *Source.* The source material used in developing this TSCA test guideline is the OPPTS harmonized test guideline 870.3700 (February 1996 Public Draft). This source is available at the address in paragraph (h) of this section.

(c) *Good laboratory practice standards.* The study shall be conducted in compliance with 40 CFR Part 792—Good Laboratory Practice Standards.

(d) *Principle of the test method.* The test substance is administered to pregnant animals at least from implantation to one day prior to the expected day of parturition. Shortly before the expected date of delivery, the pregnant females are terminated, the uterine contents are examined, and the fetuses are processed for visceral and skeletal evaluation.

(e) *Test procedures*—(1) *Animal selection*—(i) *Species and strain.* It is recommended that testing be performed in the most relevant species, and that laboratory species and strains which are commonly used in prenatal developmental toxicity testing be employed. The preferred rodent species is the rat and the preferred non-rodent species is the rabbit.

(ii) *Age.* Young adult animals shall be used.

(iii) *Sex.* Nulliparous female animals shall be used at each dose level. Animals should be mated with males of the same species and strain, avoiding the mating of siblings, if parentage is known. Day 0 in the test is the day on which a vaginal plug and/or sperm are observed in the rodent or that insemination is performed or observed in the rabbit.

(iv) *Number of animals.* Each test and control group shall contain a sufficient number of animals to yield approximately 20 animals with implantation sites at necropsy.

(2) *Administration of test and control substances*—(i) *Dose levels and dose selection.* (A) At least three-dose levels and a concurrent control shall be used. Healthy animals shall be randomly assigned to the control and treatment groups, in a manner which results in comparable mean body weight values among all groups. The dose levels should be spaced to produce a gradation of toxic effects. Unless limited by the physical/chemical nature or biological properties of the test substance, the highest dose shall be chosen with the aim to induce some developmental and/or maternal toxicity but not death or severe suffering. In the case of maternal mortality, this should not be more than approximately 10%. The intermediate dose levels should produce minimal observable toxic effects. The lowest dose level should not produce

any evidence of either maternal or developmental toxicity (i.e., the no-observed-adverse-effect level, NOAEL) or should be at or near the limit of detection for the most sensitive endpoint. Two- or four-fold intervals are frequently optimal for spacing the dose levels, and the addition of a fourth test group is often preferable to using very large intervals (e.g., more than a factor of 10) between dosages.

(B) It is desirable that additional information on metabolism and pharmacokinetics of the test substance be available to demonstrate the adequacy of the dosing regimen. This information should be available prior to testing.

(C) The highest dose tested need not exceed 1,000 mg/kg/day by oral or dermal administration, or 2 mg/L (or the maximum attainable concentration) by inhalation, unless potential human exposure data indicate the need for higher doses. If a test performed at the limit dose level, using the procedures described for this study, produces no observable toxicity and if an effect would not be expected based upon data from structurally related compounds, then a full study using three-dose levels may not be considered necessary.

(ii) *Control group.* (A) A concurrent control group shall be used. This group shall be a sham-treated control group or a vehicle-control group if a vehicle is used in administering the test substance.

(B) The vehicle control group should receive the vehicle in the highest volume used.

(C) If a vehicle or other additive is used to facilitate dosing, consideration should be given to the following characteristics: Effects on the absorption, distribution, metabolism, or retention of the test substance; effects on the chemical properties of the test substance which may alter its toxic characteristics; and effects on the food or water consumption or the nutritional status of the animals.

(iii) *Route of administration.* (A) The test substance or vehicle is usually administered orally by intubation.

(B) If another route of administration is used, for example, when the route of administration is based upon the principal route of potential human exposure, the tester shall provide justification and reasoning for its selection, and appropriate modifications may be necessary. Care should be taken to minimize stress on the maternal animals. For materials administered by inhalation, whole-body exposure is preferable to nose-only exposure due to the stress of restraint required for nose-only exposure.

(C) The test substance shall be administered at approximately the same time each day.

(D) When administered by gavage or dermal application, the dose to each animal shall be based on the most recent individual body weight determination.

(iv) *Dosing schedule.* At minimum, the test substance shall be administered daily from implantation to the day before cesarean section on the day prior to the expected day of parturition. Alternatively, if preliminary studies do not indicate a high potential for preimplantation loss, treatment may be extended to include the entire period of gestation, from fertilization to approximately 1 day prior to the expected day of termination.

(f) *Observation of animals*—(1) *Maternal.* (i) Each animal shall be observed at least once daily, considering the peak period of anticipated effects after dosing. Mortality, moribundity, pertinent behavioral changes, and all signs of overt toxicity shall be recorded at this cageside observation. In addition, thorough physical examinations shall be conducted at the same time maternal body weights are recorded.

(ii) Animals shall be weighed on day 0, at termination, and at least at 3-day intervals during the dosing period.

(iii) Food consumption shall be recorded on at least 3-day intervals, preferably on days when body weights are recorded.

(iv) (A) Females shall be terminated immediately prior to the expected day of delivery.

(B) Females showing signs of abortion or premature delivery prior to scheduled termination shall be killed and subjected to a thorough macroscopic examination.

(v) At the time of termination or death during the study, the dam shall be examined macroscopically for any

structural abnormalities or pathological changes which may have influenced the pregnancy. Evaluation of the dams during cesarean section and subsequent fetal analyses should be conducted without knowledge of treatment group in order to minimize bias.

(vi) (A) Immediately after termination or as soon as possible after death, the uteri shall be removed and the pregnancy status of the animals ascertained. Uteri that appear nongravid shall be further examined (e.g. by ammonium sulfide staining) to confirm the nonpregnant status.

(B) Each gravid uterus (with cervix) shall be weighed. Gravid uterine weights should not be obtained from dead animals if autolysis or decomposition has occurred.

(C) The number of corpora lutea shall be determined for pregnant animals.

(D) The uterine contents shall be examined for embryonic or fetal deaths and the number of viable fetuses. The degree of resorption shall be described in order to help estimate the relative time of death of the conceptus.

(2) *Fetal.* (i) The sex and body weight of each fetus shall be determined.

(ii) Each fetus shall be examined for external anomalies.

(iii) Fetuses shall be examined for skeletal and soft tissue anomalies (e.g. variations and malformations or other categories of anomalies as defined by the performing laboratory).

(A) For rodents, approximately one-half of each litter shall be prepared by standard techniques and examined for skeletal alterations, preferably bone and cartilage. The remainder shall be prepared and examined for soft tissue anomalies, using appropriate serial sectioning or gross dissection techniques. It is also acceptable to examine all fetuses by careful dissection for soft tissue anomalies followed by an examination for skeletal anomalies.

(B) For rabbits, all fetuses shall be examined for both soft tissue and skeletal alterations. The bodies of these fetuses should be evaluated by careful dissection for soft-tissue anomalies, followed by preparation and examination for skeletal anomalies. An adequate evaluation of the internal structures of the head, including the eyes, brain, nasal passages, and tongue, should be conducted for at least half of the fetuses.

(g) *Data and reporting*—(1) *Treatment of results.* Data shall be reported individually and summarized in tabular form, showing for each test group the types of change and the number of dams, fetuses, and litters displaying each type of change.

(2) *Evaluation of study results.* The following shall be provided:

(i) Maternal and fetal test results, including an evaluation of the relationship, or lack thereof, between the exposure of the animals to the test substance and the incidence and severity of all findings.

(ii) Criteria used for categorizing fetal external, soft tissue, and skeletal anomalies.

(iii) When appropriate, historical control data to enhance interpretation of study results. Historical data (on litter incidence and fetal incidence within litter), when used, should be compiled, presented, and analyzed in an appropriate and relevant manner. In order to justify its use as an analytical tool, information such as the dates of study conduct, the strain and source of the animals, and the vehicle and route of administration should be included.

(iv) Statistical analysis of the study findings should include sufficient information on the method of analysis, so that an independent reviewer/statistician can reevaluate and reconstruct the analysis. In the evaluation of study data, the litter should be considered the basic unit of analysis.

(v) In any study which demonstrates an absence of toxic effects, further investigation to establish absorption and bioavailability of the test substance should be considered.

(3) *Test report.* In addition to the reporting requirements as specified under 40 CFR part 792, subpart J, the following specific information shall be reported. Both individual and summary data should be presented.

(i) Species and strain.

(ii) Maternal toxic response data by dose, including but not limited to:

(A) The number of animals at the start of the test, the number of animals surviving, the number pregnant, and the number aborting.

(B) Day of death during the study or whether animals survived to termination.

(C) Day of observation of each abnormal clinical sign and its subsequent course.

(D) Body weight and body weight change data, including body weight change adjusted for gravid uterine weight.

(E) Food consumption and, if applicable, water consumption data.

(F) Necropsy findings, including gravid uterine weight.

(iii) Developmental endpoints by dose for litters with implants, including:

(A) Corpora lutea counts.

(B) Implantation data, number and percent of live and dead fetuses, and resorptions (early and late).

(C) Pre- and postimplantation loss calculations.

(iv) Developmental endpoints by dose for litters with live fetuses, including:

(A) Number and percent of live offspring.

(B) Sex ratio.

(C) Fetal body weight data, preferably by sex and with sexes combined.

(D) External, soft tissue, and skeletal malformation and variation data. The total number and percent of fetuses and litters with any external, soft tissue, or skeletal alteration, as well as the types and incidences of individual anomalies, should be reported.

(v) The numbers used in calculating all percentages or indices.

(vi) Adequate statistical treatment of results.

(vii) A copy of the study protocol and any amendments should be included.

(h) *References.* For additional background information on this test guideline, the following references should be consulted. These references are available for inspection at the TSCA Nonconfidential Information Center, Rm. NE–B607, Environmental Protection Agency, 401 M St., SW., Washington, DC, 12 noon to 4 p.m., Monday through Friday, except legal holidays.

(1) Aliverti, V.L. *et al.* The extent of fetal ossification as an index of delayed development in teratogenicity studies in the rat. *Teratology*. 20:237–242 (1979).

(2) Barrow, M.V. and W.J. Taylor. A rapid method for detecting malformations in rat fetuses. *Journal of Morphology* 127:291–306 (1969).

(3) Burdi, A.R. Toluidine blue-alizarin red S staining of cartilage and bone in wholemount skeltons *in vitro*. *Stain Technolology*. 40:45–48 (1965).

(4) Edwards, J.A. Ed. Woolam,D.H.M. The external development of the rabbit and rat embryo. Vol. 3. *Advances in Teratology* (Academic, NY, 1968).

(5) Fritz, H. Prenatal ossification in rabbits as indicative of fetal maturity. *Teratology*. 11:313–320 (1974).

(6) Fritz, H. and Hess, R. Ossification of the rat and mouse skeleton in the perinatal period. *Teratology*. 3:331–338 (1970).

(7) Gibson, J.P. *et al.* Use of the rabbit in teratogenicity studies. *Toxicology and Applied Pharmacology*. 9:398–408 (1966).

(8) Inouye, M. Differential staining of cartilage and bone in fetal mouse skeleton by alcian blue and alizarin red S. *Congenital Anomalies.* 16(3):171–173 (1976).

(9) Igarashi, E. *et al.* Frequence of spontaneous axial skeletal variations detected by the double staining technique for ossified and cartilaginous skeleton in rat fetuses. *Congenital Anomalies.* 32:381–391 (1992).

(10) Kimmel, C.A. *et al.* Skeletal development following heat exposure in the rat. *Teratology*. 47:229–242 (1993).

(11) Kimmel, C.A. and Francis, E.Z. Proceedings of the workshop on the acceptability and interpretation of dermal developmental toxicity studies. *Fundamental and Applied Toxicology*. 14:386–398 (1990).

(12) Kimmel, C.A. and C. Trammell. A rapid procedure for routine double staining of cartilage and bone in fetal and adult animals. *Stain Technology*. 56:271–273 (1981).

(13) Kimmel, C.A. and Wilson, J.G. Skeletal deviation in rats: malformations or variations? *Teratology*. 8:309–316 (1973).

(14) Marr, M.C. *et al.* Comparison of single and double staining for evaluation of skeletal development: the effects of ethylene glycol (EG) in CD rats. *Teratology*. 37:476 (1988).

(15) Marr, M.C. *et al.* Developmental stages of the CD (Sprague-Dawley) rat skeleton after maternal exposure to ethylene glycol. *Teratology*. 46:169–181 (1992).

(16) McLeod, M.J. Differential staining of cartilage and bone in whole mouse fetuses by Alcian blue and alizarin red S. *Teratology*. 22:299–301 (1980).

(17) Monie, I.W. *et al.* Dissection procedures for rat fetuses permitting alizarin red staining of skeleton and histological study of viscera. *Supplement to Teratology Workshop Manual.* pp. 163–173 (1965).

(18) Organisation for Economic Co-operation and Development, No. 414: Teratogenicity, Guideline for Testing of Chemicals. [C(83)44 (Final)] (1983).

(19) Salewski (Koeln), V.E. Faerbermethode zum makroskopischen nachweis von implantations stellen am uterus der ratte. *Naunyn-Schmeidebergs Archiv für*

Pharmakologie und Experimentelle Pathologie. 247:367 (1964).

(20) Spark, C. and Dawson,A.B. The order and time of appearance of centers of ossification in the fore and hind limbs of the albino rat, with special reference to the possible influence of the sex factor. *American Journal of Anatomy*. 41:411–445 (1928).

(21) Staples, R.E. Detection of visceral alterations in mammalian fetuses. *Teratology*. 9(3):A37–A38 (1974).

(22) Staples, R.E. and Schnell, V.L. Refinements in rapid clearing technique in the KOH—alizarin red S method for fetal bone. *Stain Technology*. 39:61–63 (1964).

(23) Strong, R.M. The order time and rate of ossification of the albino rat (*mus norvegicus albinus*) skeleton. *American Journal of Anatomy*. 36: 313–355 (1928).

(24) Stuckhardt, J.L. and Poppe, S.M. Fresh visceral examination of rat and rabbit fetuses used in teratogenicity testing. *Teratogenesis, Carcinogenesis, and Mutagenesis.* 4:181–188 (1984).

(25) Van Julsingha, E.B. and Bennett,C.G. Eds. Neubert, D., Merker, H.J., and Kwasigroch, T.E. A dissecting procedure for the detection of anomalies in the rabbit foetal head. *Methods in Prenatal Toxicology* (University of Chicago, Chicago, IL, 1977) pp. 126–144.

(26) Whitaker, J. and Dix, D.M. Double-staining for rat foetus skeletons in teratological studies. *Laboratory Animals.* 13:309–310 (1979).

(27) Wilson, J.G. Eds. Wilson, J.G. and Warkany, J. Embryological considerations in teratology. *Teratology: Principles and Techniques* (University of Chicago, Chicago, IL, 1965) pp. 251–277.

§ 799.9380 TSCA reproduction and fertility effects.

(a) *Scope.* This section is intended to meet the testing requirements under section 4 of the TSCA. This section is for two-generation reproduction testing and is designed to provide general information concerning the effects of a test substance on the integrity and performance of the male and female reproductive systems, including gonadal function, the estrous cycle, mating behavior, conception, gestation, parturition, lactation, and weaning, and on the growth and development of the offspring. The study may also provide information about the effects of the test substance on neonatal morbidity, mortality, target organs in the offspring, and preliminary data on prenatal and postnatal developmental toxicity and serve as a guide for subsequent tests. Additionally, since the study design includes *in utero* as well as postnatal exposure, this study provides the opportunity to examine the susceptibility of the immature/neonatal animal.

(b) *Source.* The source material used in developing this TSCA test guideline is the OPPTS harmonized test guideline 870.3800 (February 1996 Public Draft). This source is available at the address in paragraph (g) of this section.

(c) *Good laboratory practice standards.* The study shall be conducted in compliance with 40 CFR part 792—Good Laboratory Practice Standards.

(d) *Principle of the test method.* The test substance is administered to parental (P) animals prior to and during their mating, during the resultant pregnancies, and through the weaning of their F1 offspring. The substance is then administered to selected F1 offspring during their growth into adulthood, mating, and production of an F2 generation, until the F2 generation is weaned.

(e) *Test procedures*—(1) *Animal selection*—(i) *Species and strain.* The rat is the most commonly used species for testing. If another mammalian species is used, the tester shall provide justification/reasoning for its selection, and appropriate modifications will be necessary. Healthy parental animals, which have been acclimated to laboratory conditions for at least 5 days and have not been subjected to previous experimental procedures, should be used. Strains of low fecundity shall not be used.

(ii) *Age.* Parental (P) animals shall be 5 to 9 weeks old at the start of dosing. The animals of all test groups should be of uniform weight, age, and parity as nearly as practicable, and should be representative of the species and strain under study.

(iii) *Sex.* (A) For an adequate assessment of fertility, both males and females shall be studied.

(B) The females shall be nulliparous and nonpregnant.

(iv) *Number of animals.* Each control group shall contain a sufficient number of mating pairs to yield approximately 20 pregnant females. Each test group shall contain a similar number of mating pairs.

(v) *Identification of animals.* Each animal shall be assigned a unique identification number. For the P generation, this should be done before dosing starts. For the F1 generation, this should be done for animals selected for mating; in addition, records indicating the litter of origin shall be maintained for all selected F1 animals.

(2) *Administration of test and control substances*—(i) *Dose levels and dose selection.* (A) At least three-dose levels and a concurrent control shall be used. Healthy animals should be randomly assigned to the control and treatment groups, in a manner which results in comparable mean body weight values among all groups. The dose levels should be spaced to produce a gradation of toxic effects. Unless limited by the physical/chemical nature or biological properties of the test substance, the highest dose should be chosen with the aim to induce some reproductive and/or systemic toxicity but not death or severe suffering. In the case of parental mortality, this should not be more than approximately 10%. The intermediate dose levels should produce minimal observable toxic effects. The lowest dose level should not produce any evidence of either systemic or reproductive toxicity (i.e., the no-observed-adverse-effect level, NOAEL) or should be at or near the limit of detection for the most sensitive endpoint. Two- or four-fold intervals are frequently optimal for spacing the dose levels, and the addition of a fourth test group is often preferable to using very large intervals (e.g., more than a factor of 10) between dosages.

(B) It is desirable that additional information on metabolism and pharmacokinetics of the test substance be available to demonstrate the adequacy of the dosing regimen. This information should be available prior to testing.

(C) The highest dose tested should not exceed 1,000 mg/kg/day (or 20,000 ppm in the diet), unless potential human exposure data indicate the need for higher doses. If a test performed at the limit dose level, using the procedures described for this study, produces no observable toxicity and if an effect would not be expected based upon data from structurally related compounds, then a full study using three dose levels may not be considered necessary.

(ii) *Control group.* (A) A concurrent control group shall be used. This group shall be an untreated or sham treated group or a vehicle-control group if a vehicle is used in administering the test substance.

(B) If a vehicle is used in administering the test substance, the control group shall receive the vehicle in the highest volume used.

(C) If a vehicle or other additive is used to facilitate dosing, consideration should be given to the following characteristics: Effects on the absorption, distribution, metabolism, or retention of the test substance; effects on the chemical properties of the test substance which may alter its toxic characteristics; and effects on the food or water consumption or the nutritional status of the animals.

(D) If a test substance is administered in the diet and causes reduced dietary intake or utilization, the use of a pair-fed control group may be considered necessary.

(iii) *Route of administration.* (A) The test substance is usually administered by the oral route (diet, drinking water, or gavage).

(B) If administered by gavage or dermal application, the dosage administered to each animal prior to mating and during gestation and lactation shall be based on the individual animal body weight and adjusted weekly at a minimum.

(C) If another route of administration is used, for example, when the route of administration is based upon the principal route of potential human exposure, the tester should provide justification and reasoning for its selection, and appropriate modifications may be necessary. Care should be taken to minimize stress on the maternal animals and their litters during gestation and lactation.

(D) All animals should be dosed by the same method during the appropriate experimental period.

(iv) *Dosing schedule.* (A) The animals should be dosed with the test substance on a 7-days-a-week basis.

(B) Daily dosing of the parental (P) males and females shall begin when they are 5 to 9 weeks old. Daily dosing

of the F1 males and females shall begin at weaning. For both sexes (P and F1), dosing shall be continued for at least 10 weeks before the mating period.

(C) Daily dosing of the P and F1 males and females shall continue until termination.

(3) *Mating procedure*—(i) *Parental.* (A) For each mating, each female shall be placed with a single randomly selected male from the same dose level (1:1 mating) until evidence of copulation is observed or either 3 estrous periods or 2 weeks has elapsed. Animals should be separated as soon as possible after evidence of copulation is observed. If mating has not occurred after 2 weeks or 3 estrous periods, the animals should be separated without further opportunity for mating. Mating pairs should be clearly identified in the data.

(B) Vaginal smears shall be collected daily and examined for all females during mating, until evidence of copulation is observed.

(C) Each day, the females shall be examined for presence of sperm or vaginal plugs. Day 0 of pregnancy is defined as the day a vaginal plug or sperm are found.

(ii) *F1 mating.* For mating the F1 offspring, at least one male and one female should be randomly selected from each litter for mating with another pup of the same dose level but different litter, to produce the F2 generation.

(iii) *Second mating.* In certain instances, such as poor reproductive performance in the controls, or in the event of treatment-related alterations in litter size, the adults may be remated to produce an F1b or F2b litter. If production of a second litter is deemed necessary in either generation, the dams should be remated approximately 1–2 weeks following weaning of the last F1a or F2a litter.

(iv) *Special housing.* After evidence of copulation, animals that are presumed to be pregnant shall be caged separately in delivery or maternity cages. Pregnant animals shall be provided with nesting materials when parturition is near.

(v) *Standardization of litter sizes.* (A) Animals should be allowed to litter normally and rear their offspring to weaning. Standardization of litter sizes is optional.

(B) If standardization is performed, the following procedure should be used. On day 4 after birth, the size of each litter may be adjusted by eliminating extra pups by random selection to yield, as nearly as possible, four males and four females per litter or five males and five females per litter. Selective elimination of pups, i.e. based upon body weight, is not appropriate. Whenever the number of male or female pups prevents having four (or five) of each sex per litter, partial adjustment (for example, five males and three females, or four males and six females) is acceptable. Adjustments are not appropriate for litters of eight pups or less.

(4) *Observation of animals*—(i) *Parental.* (A) Throughout the test period, each animal shall be observed at least once daily, considering the peak period of anticipated effects after dosing. Mortality, moribundity, pertinent behavioral changes, signs of difficult or prolonged parturition, and all signs of overt toxicity shall be recorded at this cageside examination. In addition, thorough physical examinations should be conducted weekly on each animal.

(B) Parental animals (P and F1) shall be weighed on the first day of dosing and weekly thereafter. Parental females (P and F1) should be weighed at a minimum on approximately gestation days 0, 7, 14, and 21, and during lactation on the same days as the weighing of litters.

(C) During the premating and gestation periods, food consumption shall be measured weekly at a minimum. Water consumption should be measured weekly at a minimum if the test substance is administered in the water.

(D) Estrous cycle length and pattern should be evaluated by vaginal smears for all P and F1 females during a minimum of 3 weeks prior to mating and throughout cohabitation; care should be taken to prevent the induction of pseudopregnancy.

(E) For all P and F1 males at termination, sperm from one testis and one epididymis shall be collected for enumeration of homogenization-resistant spermatids and cauda epididymal sperm reserves, respectively. In addition, sperm from the cauda epididymis (or vas deferens) should be collected for

evaluation of sperm motility and sperm morphology.

(*1*) The total number of homogenization-resistant testicular sperm and cauda epididymal sperm should be enumerated. The method described in the reference under paragraph (g)(8) of this section may be used. Cauda sperm reserves can be derived from the concentration and volume of sperm in the suspension used to complete the qualitative evaluations, and the number of sperm recovered by subsequent mincing and/or homogenizing of the remaining cauda tissue. Enumeration in only control and high-dose P and F1 males may be performed unless treatment-related effects are observed; in that case, the lower dose groups should also be evaluated.

(*2*) An evaluation of epididymal (or vas deferens) sperm motility should be performed. Sperm should be recovered while minimizing damage (the evaluation techniques as described in the reference under paragraph (g)(8) of this section may be used), and the percentage of progressively motile sperm should be determined either subjectively or objectively. For objective evaluations, an acceptable counting chamber of sufficient depth can be used to effectively combine the assessment of motility with sperm count and sperm morphology. When computer-assisted motion analysis is performed, the derivation of progressive motility relies on user-defined thresholds for average path velocity and straightness or linear index. If samples are videotaped, or images otherwise recorded, at the time of necropsy, subsequent analysis of only control and high-dose P and F1 males may be performed unless treatment-related effects are observed; in that case, the lower dose groups should also be evaluated. In the absence of a video or digital image, all samples in all treatment groups should be analyzed at necropsy.

(*3*) A morphological evaluation of an epididymal (or vas deferens) sperm sample shall be performed. Sperm (at least 200 per sample) should be examined as fixed, wet preparations (the techniques for such examinations is described in the references under paragraphs (g)(4) and (g)(8) of this section may be used) and classified as either normal (both head and midpiece/tail appear normal) or abnormal. Examples of morphologic sperm abnormalities would include fusion, isolated heads, and misshapen heads and/or tails. Evaluation of only control and high-dose P and F1 males may be performed unless treatment-related effects are observed; in that case, the lower dose groups should also be evaluated.

(ii) *Offspring.* (A) Each litter should be examined as soon as possible after delivery (lactation day 0) to establish the number and sex of pups, stillbirths, live births, and the presence of gross anomalies. Pups found dead on day 0 should be examined for possible defects and cause of death.

(B) Live pups should be counted, sexed, and weighed individually at birth, or soon thereafter, at least on days 4, 7, 14, and 21 of lactation, at the time of vaginal patency or balanopreputial separation, and at termination.

(C) The age of vaginal opening and preputial separation should be determined for F1 weanlings selected for mating. If there is a treatment-related effect in F1 sex ratio or sexual maturation, anogenital distance should be measured on day 0 for all F2 pups.

(5) *Termination schedule.* (i) All P and F1 adult males and females should be terminated when they are no longer needed for assessment of reproductive effects.

(ii) F1 offspring not selected for mating and all F2 offspring should be terminated at comparable ages after weaning.

(6) *Gross necropsy*. (i) At the time of termination or death during the study, all parental animals (P and F1) and when litter size permits at least three pups per sex per litter from the unselected F1 weanlings and the F2 weanlings shall be examined macroscopically for any structural abnormalities or pathological changes. Special attention shall be paid to the organs of the reproductive system.

(ii) Dead pups or pups that are terminated in a moribund condition should be examined for possible defects and/or cause of death.

(iii) At the time of necropsy, a vaginal smear should be examined to determine the stage of the estrous cycle.

The uteri of all cohabited females should be examined, in a manner which does not compromise histopathological evaluation, for the presence and number of implantation sites.

(7) *Organ weights.* (i) At the time of termination, the following organs of all P and F1 parental animals shall be weighed:

(A) Uterus (with oviducts and cervix), ovaries.

(B) Testes, epididymides (total weights for both and cauda weight for either one or both), seminal vesicles (with coagulating glands and their fluids), and prostate.

(C) Brain, pituitary, liver, kidneys, adrenal glands, spleen, and known target organs.

(ii) For F1 and F2 weanlings that are examined macroscopically, the following organs shall be weighed for one randomly selected pup per sex per litter.

(A) Brain.

(B) Spleen and thymus.

(8) *Tissue preservation.* The following organs and tissues, or representative samples thereof, shall be fixed and stored in a suitable medium for histopathological examination.

(i) For the parental (P and F1) animals:

(A) Vagina, uterus with oviducts, cervix, and ovaries.

(B) One testis (preserved in Bouins fixative or comparable preservative), one epididymis, seminal vesicles, prostate, and coagulating gland.

(C) Pituitary and adrenal glands.

(D) Target organs, when previously identified, from all P and F1 animals selected for mating.

(E) Grossly abnormal tissue.

(ii) For F1 and F2 weanlings selected for macroscopic examination: Grossly abnormal tissue and target organs, when known.

(9) *Histopathology*—(i) *Parental animals.* Full histopathology of the organs listed in paragraph (e)(8)(i) of this section shall be performed for ten randomly chosen high dose and control P and F1 animals per sex, for those animals that were selected for mating. Organs demonstrating treatment-related changes shall also be examined for the remainder of the high-dose and control animals and for all parental animals in the low- and mid-dose groups. Additionally, reproductive organs of the low- and mid-dose animals suspected of reduced fertility, e.g., those that failed to mate, conceive, sire, or deliver healthy offspring, or for which estrous cyclicity or sperm number, motility, or morphology were affected, shall be subjected to histopathological evaluation. Besides gross lesions such as atrophy or tumors, testicular histopathological examination should be conducted in order to to identify treatment-related effects such as retained spermatids, missing germ cell layers or types, multinucleated giant cells, or sloughing of spermatogenic cells into the lumen. Examination of the intact epididymis should include the caput, corpus, and cauda, which can be accomplished by evaluation of a longitudinal section, and should be conducted in order to identify such lesions as sperm granulomas, leukocytic infiltration (inflammation), aberrant cell types within the lumen, or the absence of clear cells in the cauda epididymal epithelium. The postlactational ovary should contain primordial and growing follicles as well as the large corpora lutea of lactation. Histopathological examination should detect qualitative depletion of the primordial follicle population. A quantitative evaluation of primordial follicles should be conducted for all F1 females; the number of animals, ovarian section selection, and section sample size should be statistically appropriate for the evaluation procedure used. Examination should include enumeration of the number of primordial follicles, which can be combined with small growing follicles (see paragraphs (g)(1) and (g)(2) of this section), for comparison of treated and control ovaries.

(ii) *Weanling.* For F1 and F2 weanlings, histopathological examination of treatment-related abnormalities noted in macroscopic examination should be considered, if such evaluation were deemed appropriate and would contribute to the interpretation of the study data.

(f) *Data and reporting*—(1) *Treatment of results.* Data shall be reported individually and summarized in tabular form, showing for each test group the

types of change and the number of animals displaying each type of change.

(2) *Evaluation of study results.* (i) An evaluation of test results, including the statistical analysis, shall be provided. This should include an evaluation of the relationship, or lack thereof, between the exposure of the animals to the test substance and the incidence and severity of all abnormalities.

(ii) When appropriate, historical control data should be used to enhance interpretation of study results. Historical data, when used, should be compiled, presented, and analyzed in an appropriate and relevant manner. In order to justify its use as an analytical tool, information such as the dates of study conduct, the strain and source of the animals, and the vehicle and route of administration should be included.

(iii) Statistical analysis of the study findings should include sufficient information on the method of analysis, so that an independent reviewer/statistician can reevaluate and reconstruct the analysis.

(iv) In any study which demonstrates an absence of toxic effects, further investigation to establish absorption and bioavailability of the test substance should be considered.

(3) *Test report.* In addition to the reporting requirements as specified under 40 CFR part 792, subpart J, the following specific information shall be reported. Both individual and summary data should be presented.

(i) Species and strain.

(ii) Toxic response data by sex and dose, including indices of mating, fertility, gestation, birth, viability, and lactation; offspring sex ratio; precoital interval, including the number of days until mating and the number of estrous periods until mating; and duration of gestation calculated from day 0 of pregnancy. The report should provide the numbers used in calculating all indices.

(iii) Day (week) of death during the study or whether animals survived to termination; date (age) of litter termination.

(iv) Toxic or other effects on reproduction, offspring, or postnatal growth.

(v) Developmental milestone data (mean age of vaginal opening and preputial separation, and mean anogenital distance, when measured).

(vi) Number of P and F1 females cycling pattern and mean estrous cycle length.

(vii) Day (week) of observation of each abnormal sign and its subsequent course.

(viii) Body weight and body weight change data by sex for P, F1, and F2 animals.

(ix) Food (and water, if applicable) consumption, food efficiency (body weight gain per gram of food consumed), and test material consumption for P and F1 animals, except for the period of cohabitation.

(x) Total cauda epididymal sperm number, homogenization-resistant testis spermatid number, number and percent of progressively motile sperm, number and percent of morphologically normal sperm, and number and percent of sperm with each identified anomaly.

(xi) Stage of the estrous cycle at the time of termination for P and F1 parental females.

(xii) Necropsy findings.

(xiii) Implantation data and postimplantation loss calculations for P and F1 parental females.

(xiv) Absolute and adjusted organ weight data.

(xv) Detailed description of all histopathological findings.

(xvi) Adequate statistical treatment of results.

(xvii) A copy of the study protocol and any amendments should be included.

(g) *References.* For additional backgound information on this test guideline, the following references should be consulted. These references are available for inspection at the TSCA Nonconfidential Information Center, Rm. NE–B607, Environmental Protection Agency, 401 M St., SW., Washington, DC, 12 noon to 4 p.m., Monday through Friday, except legal holidays.

(1) Gray, L.E. *et al.* A dose-response analysis of methoxychlor-induced alterations of reproductive development and function in the rat. *Fundamental and Applied Toxicology*. 12:92–108 (1989).

(2) Heindel, J.J. *et al.* Ed. Hirshfield, A.N. Histological assessment of ovarian follicle

number in mice as a screen of ovarian toxicity. *Growth Factors and the Ovary* (Plenum, NY, 1989) pp. 421–426.

(3) Korenbrot, C.C. *et al.* Preputial separation as an external sign of pubertal development in the male rat. *Biology of Reproduction*. 17:298–303 (1977).

(4) Linder, R.E. *et al.* Endpoints of spermatoxicity in the rat after short duration exposures to fourteen reproductive toxicants. *Reproductive Toxicology*. 6:491–505 (1992).

(5) Manson, J.M. and Kang, Y.J. Ed. Hayes, A.W. Test methods for assessing female reproductive and developmental toxicology. *Principles and Methods of Toxicology* (Raven, NY, 1989).

(6) Organisation for Economic Co-operation and Development, No. 416: Two Generation Reproduction Toxicity Study, Guidelines for Testing of Chemicals. [C(83)44 (Final)] (1983).

(7) Pederson, T. and Peters, H. Proposal for classification of oocytes and follicles in the mouse ovary. *Journal of Reproduction and Fertility*. 17:555–557 (1988).

(8) Seed, J., Chapin, R.E. E.D. Clegg, L.A. Dostal, R.H. Foote, M.E. Hurtt, G.R. Klinefelter, S.L. Makris, S.D. Perreault, S. Schrader, D. Seyler, R. Sprando, K.A. Treinen, D.N.R. Veeramachaneni, and Wise, L.D. Methods for assessing sperm motility, morphology, and counts in the rat, rabbit, and dog: a consensus report. *Reproductive Toxicology*. 10(3):237–244 (1996).

(9) Smith, B.J. *et al.* Comparison of random and serial sections in assessment of ovarian toxicity. *Reproductive Toxicology*. 5:379–383 (1991).

(10) Thomas, J.A. Eds. M.O. Amdur, J. Doull, and C.D. Klaassen. Toxic responses of the reproductive system. *Casarett and Doull's Toxicology* (Pergamon, NY, 1991).

(11) Working, P.K. and Hurtt, M. Computerized videomicrographic analysis of rat sperm motility. *Journal of Andrology*. 8:330–337 (1987).

(12) Zenick, H. *et al.* Ed. Hayes, A.W. Assessment of male reproductive toxicity: a risk assessment approach. *Principles and Methods of Toxicology* (Raven, NY, 1994).

[62 FR 43824, Aug. 15, 1997, as amended at 64 FR 35078, June 30, 1999]

§ 799.9410 TSCA chronic toxicity.

(a) *Scope*—(1) *Applicability*. This section is intended to meet the testing requirement of the Toxic Substances Control Act (TSCA) (15 U.S.C. 2601).

(2) *Source.* The source material used in developing this TSCA test guideline is the Office of Prevention, Pesticides and Toxic Substances (OPPTS) harmonized test guideline 870.4100 (August 1998, final guidelines). This source is available at the address in paragraph (h) of this section

(b) *Purpose.* The objective of a chronic toxicity study is to determine the effects of a substance in a mammalian species following prolonged and repeated exposure. A chronic toxicity study should generate data from which to identify the majority of chronic effects and to define long-term dose-response relationships. The design and conduct of chronic toxicity tests should allow for the detection of general toxic effects, including neurological, physiological, biochemical, and hematological effects and exposure-related morphological (pathological) effects.

(c) *Definitions.* The definitions in section 3 of TSCA and in 40 CFR Part 792—Good Laboratory Practice Standards apply to this section. The following definitions also apply to this section.

Chronic toxicity is the adverse effects occurring as a result of the repeated daily exposure of experimental animals to a chemical by the oral, dermal, or inhalation routes of exposure.

Cumulative toxicity is the adverse effects of repeated doses occurring as a result of prolonged action on, or increased concentration of, the administered test substance or its metabolites in susceptible tissue.

Dose in a chronic toxicity study is the amount of test substance administered daily via the oral, dermal or inhalation routes for a period of at least 12 months. Dose is expressed as weight of the test substance (grams, milligrams) per unit body weight of test animal (milligram per kilogram), or as weight of the test substance in parts per million (ppm) in food or drinking water per day. For inhalation exposure, dose is expressed as weight of the test substance per unit volume of air (milligrams per liter) or as parts per million per day. For dermal exposure, dose is expressed as weight of the test substance (grams, milligrams) per unit body weight of the test animal (milligrams per kilogram) or as weight of the substance per unit of surface area (milligrams per square centimeter) per day.

No-observed-effects level (NOEL) is the maximum dose used in a study which produces no adverse effects. The NOEL

is usually expressed in terms of the weight of a test substance given daily per unit weight of test animal (milligrams per kilogram per day).

Target organ is any organ of a test animal showing evidence of an effect induced by a test substance.

(d) *Limit test.* If a test at one dose level of at least 1,000 mg/kg body weight (expected human exposure may indicate the need for a higher dose level), using the procedures described for this study, produces no observable toxic effects and if toxicity would not be expected based upon data of structurally related compounds, a full study using three dose levels might not be necessary.

(e) *Test procedures*—(1) *Animal selection*—(i) *Species and strain.* Testing should be performed with two mammalian species, one a rodent and the other a nonrodent. The rat is the preferred rodent species. Commonly used laboratory strains must be employed.

(ii) *Age/weight.* (A) Testing must be started with young healthy animals as soon as possible after weaning and acclimatization.

(B) Dosing of rodents should generally begin no later than 8 weeks of age.

(C) Dosing of non-rodents should begin between 4 and 6 months of age and in no case later than 9 months of age.

(D) At commencement of the study, the weight variation of animals used should be within 20% of the mean weight for each sex.

(E) Studies using prenatal or neonatal animals may be recommended under special conditions.

(iii) *Sex.* (A) Equal numbers of animals of each sex should be used at each dose level.

(B) Females should be nulliparous and nonpregnant.

(iv) *Numbers.* (A) For rodents, at least 40 animals (20 males and 20 females) and for nonrodents at least 8 animals (4 females and 4 males) should be used at each dose level and concurrent control group.

(B) If interim sacrifices are planned, the number should be increased by the number of animals scheduled to be sacrificed during the course of the study.

(C) The number of animals at the termination of the study must be adequate for a meaningful and valid statistical evaluation of chronic effects. The Agency must be notified if excessive early deaths or other problems are encountered that might compromise the integrity of the study.

(D) To avoid bias, the use of adequate randomization procedures for the proper allocation of animals to test and control groups is required.

(E) Each animal should be assigned a unique identification number. Dead animals, their preserved organs and tissues, and microscopic slides should be identified by reference to the unique numbers assigned.

(v) *Husbandry.* (A) Rodents may be group-caged by sex, but the number of animals per cage must not interfere with clear observation of each animal. The biological properties of the test substance or toxic effects (e.g., morbidity, excitability) may indicate a need for individual caging. Rodents should be housed individually in dermal studies and during exposure in inhalation studies. Caging should be appropriate to the nonrodent species.

(B) The temperature of the experimental animal rooms should be at 22 ± 3 °C.

(C) The relative humidity of the experimental animal rooms should be 50 ± 20%.

(D) Where lighting is artificial, the sequence should be 12 hours light/12 hours dark.

(E) Control and test animals should be fed from the same batch and lot. The feed should be analyzed to assure adequacy of nutritional requirements of the species tested and for impurities that might influence the outcome of the test. Animals should be fed and watered ad libitum with food replaced at least weekly.

(F) The study should not be initiated until animals have been allowed a period of acclimatization/quarantine to environmental conditions, nor should animals from outside sources be placed on test without an adequate period of quarantine. An acclimation period of at least 5 days is recommended.

(2) *Control and test substances.* (i) Where necessary, the test substance is

dissolved or suspended in a suitable vehicle. If a vehicle or diluent is needed it should not elicit toxic effects itself nor substantially alter the chemical or toxicological properties of the test substance. It is recommended that wherever possible the use of an aqueous solution be the first choice, followed by consideration of solution in oil, and finally, solution in other vehicles.

(ii) One lot of the test substance should be used, if possible, throughout the duration of the study, and the research sample should be stored under conditions that maintain its purity and stability. Prior to the initiation of the study, there should be a characterization of the test substance, including the purity of the test compound, and, if technically feasible, the names and quantities of contaminants and impurities.

(iii) If the test or control substance is to be incorporated into feed or another vehicle, the period during which the test substance is stable in such a mixture should be determined prior to the initiation of the study. Its homogeneity and concentration should be determined prior to the initiation of the study and periodically during the study. Statistically randomized samples of the mixture should be analyzed to ensure that proper mixing, formulation, and storage procedures are being followed, and that the appropriate concentration of the test or control substance is contained in the mixture.

(3) *Control groups.* A concurrent control group is required. This group should be an untreated or sham-treated control group or, if a vehicle is used in administering the test substance, a vehicle control group. If the toxic properties of the vehicle are not known or cannot be made available, both untreated and vehicle control groups are required.

(4) *Satellite group.* A satellite group of 40 animals (20 animals per sex) for rodents and 8 animals (4 animals per sex) for nonrodents may be treated with the high-dose level for 12 months and observed for reversibility, persistence, or delayed occurrence of toxic effects for a post-treatment of appropriate length, normally not less than 28 days. In addition, a control group of 40 animals (20 animals per sex) for rodents and 8 animals (4 animals per sex) for nonrodents should be added to the satellite study.

(5) *Dose levels and dose selections.* (i) In chronic toxicity tests, it is desirable to determine a dose-response relationship as well as a NOEL. Therefore, at least three dose levels with a control group and, where appropriate, a vehicle control (corresponding to the concentration of the vehicle at the highest exposure level) should be used. Dose levels should be spaced to produce a gradation of effects. A rationale must be provided for the doses selected.

(ii) The highest-dose level should elicit signs of toxicity without substantially altering the normal life span of the animal. The highest dose should be determined based on the findings from a 90-day study to ensure that the dose used is adequate to assess the chronic toxicity of the test substance. Thus, the selection of the highest dose to be tested is dependent upon changes observed in several toxicological parameters in subchronic studies. The highest dose tested need not exceed 1,000 mg/kg/day. If dermal application of the test substance produces severe skin irritation, then it may be necessary either to terminate the study and choose a lower high-dose level or to reduce the dose level. Gross criteria for defining severe irritation would include ulcers, fissures, exudate/crust(eschar), dead tissue, or anything leading to destruction of the functional integrity of the epidermis (e.g. caking, open sores, fissuring, eschar). Histological criteria for defining severe irritation would include follicular and interfollicular crust, microulcer, mild/moderate degeneration/necrosis, moderate/marked epidermal edema, marked dermal edema, and marked inflammation.

(iii) The intermediate dose levels should be spaced to produce a gradation of toxic effects.

(iv) The lowest-dose level should produce no evidence of toxicity.

(6) *Administration of the test substance.* The three main routes of administration are oral, dermal, and inhalation. The choice of the route of administration depends upon the physical and chemical characteristics of the test substance and the form typifying exposure in humans.

(i) *Oral studies.* Ideally, the animals should be dosed by gavage or with capsules on a 7-day per week basis for a period of at least 12 months. However, based primarily on practical considerations, dosing by gavage or capsules on a 5-day per week schedule is acceptable. If the test substance is administered via in the drinking water or mixed in the diet, exposure should be on a 7-day per week basis.

(ii) *Dermal studies.* (A) Preparation of animal skin. Shortly before testing, fur should be clipped from not less than 10% of the body surface area for application of the test substance. In order to dose approximately 10% of the body surface, the area starting at the scapulae (shoulders) to the wing of the ileum (hipbone) and half way down the flank on each side of the animal should be shaved. Shaving should be carried out approximately 24 hours before dosing. Repeated clipping or shaving is usually needed at approximately weekly intervals. When clipping or shaving the fur, care should be taken to avoid abrading the skin which could alter its permeability.

(B) Preparation of test substance. Liquid test substances are generally used undiluted, except as indicated in paragraph (e)(5)(ii) of this section. Solids should be pulverized when possible. The substance should be moistened sufficiently with water or, when necessary, with a suitable vehicle to ensure good contact with the skin. When a vehicle is used, the influence of the vehicle on toxicity of, and penetration of the skin by, the test substance should be taken into account.The volume of application should be kept constant, e.g., less than 100 µL for the mouse and less than 300 µL for the rat. Different concentrations of test solution should be prepared for different dose levels.

(C) Administration of test substance. The duration of exposure should be at least for 12 months. Ideally, the animals should be treated with test substance for at least 6 hours per day on a 7-day per week basis. However, based on practical considerations, application on a 5-day per week basis is acceptable. Dosing should be conducted at approximately the same time each day. The test substance should be applied uniformly over the treatment site. The surface area covered may be less for highly toxic substances. As much of the area should be covered with as thin and uniform a film as possible. For rats, the test substance may be held in contact with the skin with a porous gauze dressing and nonirritating tape if necessary. The test site should be further covered in a suitable manner to retain the gauze dressing plus test substance and to ensure that the animals cannot ingest the test substance. The application site should not be covered when the mouse is the species of choice. The test substance may be wiped from the skin after the six-hour exposure period to prevent ingestion.

(iii) *Inhalation studies.* (A) The animals should be exposed to the test substance for 6 hours per day on a 7-day per week basis, for a period of at least 12 months. However, based primarily on practical considerations, exposure for 6 hours per day on a 5-day per week basis is acceptable.

(B) The animals should be tested in dynamic inhalation equipment designed to sustain a minimum air flow of 10 air changes per hour, an adequate oxygen content of at least 19%, and uniform conditions throughout the exposure chamber. Maintenance of slight negative pressure inside the chamber will prevent leakage of the test substance into surrounding areas. It is not normally necessary to measure chamber oxygen concentration if airflow is adequate.

(C) The selection of a dynamic inhalation chamber should be appropriate for the test substance and test system. When a whole body chamber is used, individual housing must be used to minimize crowding of the test animals and maximize their exposure to the test substance. To ensure stability of a chamber atmosphere, the total volume occupied by the test animals should not exceed 5% of the volume of the test chamber. It is recommended, but not required, that nose-only or head-only exposure be used for aerosol studies in order to minimize oral exposures due to animals licking compound off their fur. The animals should be acclimated and heat stress minimized.

(D) The temperature at which the test is performed should be maintained at 22 ± 2 °C. The relative humidity should be maintained between 40–60%, but in certain instances (e.g., use of water vehicle) this may not be practicable.

(E) The rate of air flow should be monitored continuously but recorded at least three times during the exposure.

(F) Temperature and humidity should be monitored continuously but should be recorded at least every 30 min.

(G) The actual concentrations of the test substance should be measured in the breathing zone. During the exposure period, the actual concentrations of the test substance should be held as constant as practicable, monitored continuously or intermittently depending on the method of analysis. Chamber concentration may be measured using gravimetric or analytical methods, as appropriate. If trial run measurements are reasonably consistent (± 10% for liquid aerosol, gas, or vapor; ± 20% for dry aerosol), then two measurements should be sufficient. If measurements are not consistent, three to four measurements should be taken. If there is some difficulty measuring chamber analytical concentration due to precipitation, nonhomogeneous mixtures, volatile components, or other factors, additional analysis of inert components may be necessary.

(H) During the development of the generating system, particle size analysis should be performed to establish the stability of aerosol concentrations with respect to particle size. The mass median aerodynamic diameter (MMAD) particle size range should be between 1–3 µm. The particle size of hygroscopic materials should be small enough when dry to assure that the size of the swollen particle will still be within the 1–3 µm range. Measurements of aerodynamic particle size in the animal's breathing zone should be measured during a trial run. If MMAD values for each exposure level are within 10% of each other, then two measurements during the exposures should be sufficient. If pretest measurements are not within 10% of each other, three to four measurements should be taken.

(I) Feed should be withheld during exposure. Water may also be withheld during exposure.

(7) *Observation period.* (i) Animals should be observed for a period of at least 12 months.

(ii) Animals in a satellite group (if used) scheduled for follow-up observations should be kept for at least 28 days further without treatment to detect recovery from, or persistence of, toxic effects.

(8) *Observation of animals.* (i) Observations should be made at least twice each day for morbidity and mortality. Appropriate actions should be taken to minimize loss of animals to the study (e.g., necropsy or refrigeration of those animals found dead and isolation or sacrifice of weak or moribund animals). General clinical observations should be made at least once a day, preferably at the same time each day, taking into consideration the peak period of anticipated effects after dosing. The clinical condition of the animal should be recorded.

(ii) A careful clinical examination should be made at least once prior to the initiation of treatment (to allow for within subject comparisons) and once weekly during treatment in all animals. These observations should be made outside the home cage, preferably in a standard arena, and at similar times on each occasion. Effort should be made to ensure that variations in the observation conditions are minimal. Observations should be detailed and carefully recorded, preferably using scoring systems, explicitly defined by the testing laboratory. Signs noted should include, but not be limited to, changes in skin, fur, eyes, mucous membranes, occurrence of secretions and excretions and autonomic activity (e.g., lacrimation, piloerection, pupil size, unusual respiratory pattern). Changes in gait, posture and response to handling as well as the presence of clonic or tonic movements, stereotypies (e.g., excessive grooming, repetitive circling) or bizarre behavior (e.g., self-mutilation, walking backwards) should be recorded.

(iii) Once, near the end of the first year of the exposure period and in any

case not earlier than in month 11, assessment of motor activity, grip strength, and sensory reactivity to stimuli of different types (e.g., visual, auditory, and proprioceptive stimuli) should be conducted in rodents. Further details of the procedures that could be followed are described in the references listed under paragraphs (h)(2), (h)(7), (h)(8), and (h)(11) of this section.

(iv) Functional observations conducted towards the end of the study may be omitted when data on functional observations are available from other studies and the daily clinical observations did not reveal any functional deficits.

(v) Exceptionally, functional observations may be omitted for groups that otherwise reveal signs of toxicity to an extent that would significantly interfere with functional test performance.

(vi) Body weights should be recorded individually for all animals once prior to the administration of the test substance, once a week during the first 13 weeks of study and at least once every 4 weeks thereafter, unless signs of clinical toxicity suggest more frequent weighing to facilitate monitoring of health status.

(vii) Measurements of feed consumption should be determined weekly during the first 13 weeks of the study and at approximately monthly intervals thereafter unless health status or body weight changes dictate otherwise. Measurements of water consumption should be determined at the same intervals if the test substance is administered in the drinking water.

(viii) Moribund animals should be removed and sacrificed when noticed and the time of death should be recorded as precisely as possible. All survivors should be sacrificed at the end of the study period.

(9) *Clinical pathology*. Hematology, clinical chemistry, and urinalysis should be performed on 10 rats per sex per group, and on all nonrodents. In rodents, the parameters should be examined at approximately 6 month intervals during the conduct of the study and at termination. If possible, these collections should be from the same animals at each interval. In nonrodents, the parameters should be examined once or twice prior to initiation of treatment, at 6-month intervals during the conduct of the study, and at termination. If hematological and biochemical effects were seen in the subchronic study, testing should also be performed at 3 months. Overnight fasting of animals prior to blood sampling is recommended.

(i) *Hematology*. The recommended parameters are red blood cell count, hemoglobin concentration, hematocrit, mean corpuscular volume, mean corpuscular hemoglobin, and mean corpuscular hemoglobin concentration, white blood cell count, differential leukocyte count, platelet count, and a measure of clotting potential, such as prothrombin time or activated partial thromboplastin time.

(ii) *Clinical chemistry*. (A) Parameters which are considered appropriate to all studies are electrolyte balance, carbohydrate metabolism, and liver and kidney function. The selection of specific tests will be influenced by observations on the mode of action of the substance and signs of clinical toxicity.

(B) The recommended clinical chemistry determinations are potassium, sodium, calcium (nonrodent), phosphorus (nonrodent), chloride (nonrodent), glucose, total cholesterol, urea nitrogen, creatinine, total protein, total bilirubin (nonrodent), and albumin. More than two hepatic enzymes, (such as alanine aminotransferase, aspartate aminotransferase, alkaline phosphatase, sorbitol dehydrogenase, or gamma glutamyl transpeptidase) should also be measured. Measurements of additional enzymes (of hepatic or other origin) and bile acids, may also be useful.

(C) If a test chemical has an effect on the hematopoietic system, reticulocyte counts and bone marrow cytology may be indicated.

(D) Other determinations that should be carried out if the test chemical is known or suspected of affecting related measures include calcium, phosphorus, fasting triglycerides, hormones, methemoglobin, and cholinesterases.

(iii) *Urinalysis*. Urinalysis for rodents should be performed at the end of the study using timed urine collection. Urinalysis for nonrodents should be performed prior to treatment, midway

through treatment and at the end of the study using timed urine collection. Urinalysis determinations include: appearance, volume, osmolality or specific gravity, pH, protein, glucose, and blood/blood cells.

(10) *Ophthalmological examination.* Examinations should be made of all animals using an ophthalmoscope or equivalent device prior to the administration of the test substance and at termination of the study on 10 rats of each sex in the high-dose and control groups and preferably in all nonrodents, but at least the control and high-dose groups should be examined. If changes in eyes are detected, all animals should be examined.

(11) *Gross necropsy.* (i) All animals should be subjected to a full gross necropsy which includes examination of the external surface of the body, all orifices, and the cranial, thoracic and abdominal cavities and their contents.

(ii) At least the liver, kidneys, adrenals, testes, epididymides, ovaries, uterus, nonrodent thyroid (with parathyroid), spleen, brain, and heart should be weighed wet as soon as possible after dissection to avoid drying. The lungs should be weighed if the test substance is administered by the inhalation route.

(iii) The following organs and tissues, or representative samples thereof, should be preserved in a suitable medium for possible future histopathological examination:

(A) Digestive system—salivary glands, esophagus, stomach, duodenum, jejunum, ileum, cecum, colon, rectum, liver, pancreas, gallbladder (when present).

(B) Nervous system—brain (multiple sections, including cerebrum, cerebellum and medulla/pons), pituitary, peripheral nerve (sciatic or tibial, preferably in close proximity to the muscle), spinal cord (three levels, cervical, mid-thoracic and lumbar), eyes (retina, optic nerve).

(C) Glandular system—adrenals, parathyroid, thyroid.

(D) Respiratory system—trachea, lungs, pharynx, larynx, nose.

(E) Cardiovascular/hematopoietic system—aorta, heart, bone marrow (and/or fresh aspirate), lymph nodes (preferably one lymph node covering the route of administration and another one distant from the route of administration to cover systemic effects), spleen.

(F) Urogenital system—kidneys, urinary bladder, prostate, testes, epididymides, seminal vesicle(s), uterus, ovaries, female mammary gland.

(G) Other—all gross lesions and masses, skin.

(iv) In inhalation studies, the entire respiratory tract, including nose, pharynx, larynx, and paranasal sinuses should be examined and preserved. In dermal studies, skin from treated and adjacent control skin sites should be examined and preserved.

(v) Inflation of lungs and urinary bladder with a fixative is the optimal method for preservation of these tissues. The proper inflation and fixation of the lungs in inhalation studies is considered essential for appropriate and valid histopathological examination.

(vi) Information from clinical pathology and other in-life data should be considered before microscopic examination, since they may provide significant guidance to the pathologist.

(12) *Histopathology.* (i) The following histopathology should be performed:

(A) Full histopathology on the organs and tissues (listed under paragraph (e)(11)(iii) of this section) of all rodents and nonrodents in the control and high-dose groups, and all rodents and nonrodents that died or were sacrificed during the study. The examination should be extended to all animals in all dosage groups if treatment-related changes are observed in the high-dose group.

(B) All gross lesions in all animals.

(C) Target tissues in all animals.

(ii) If the results show substantial alteration of the animal's normal life span, or other effects that might compromise the significance of the data, the next lower levels should be examined fully as described in paragraph (e)(12)(i) of this section.

(iii) An attempt should be made to correlate gross observations with microscopic findings.

(iv) Tissues and organs designated for microscopic examination should be

fixed in 10% buffered formalin or a recognized suitable fixative as soon as necropsy is performed and no less than 48 hours prior to trimming.

(f) *Data and reporting*—(1) *Treatment of results.* (i) Data should be summarized in tabular form, showing for each test group the number of animals at the start of the test, the number of animals showing lesions, the types of lesions and the percentage of animals displaying each type of lesion.

(ii) When applicable, all observed results (quantitative and qualitative) should be evaluated by an appropriate statistical method. Any generally accepted statistical methods may be used; the statistical methods including significance criteria should be selected during the design of the study.

(2) *Evaluation of study results.* The findings of a chronic toxicity study should be evaluated in conjunction with the findings of preceding studies and considered in terms of the toxic effects as well as the necropsy and histopathological findings. The evaluation will include the relationship between the dose of the test substance and the presence, incidence, and severity of abnormalities (including behavioral and clinical abnormalities), gross lesions, identified target organs, body weight changes, effects on mortality and any other general or specific toxic effects.

(3) *Test report.* In addition to the reporting requirements specified under EPA Good Laboratory Practice Standards at 40 CFR part 792, subpart J, the following specific information must be reported:

(i) Test substance characterization should include:

(A) Chemical identification.

(B) Lot or batch number.

(C) Physical properties.

(D) Purity/impurities.

(ii) Identification and composition of any vehicle used.

(iii) Test system should contain data on:

(A) Species and strain of animals used and rationale for selection if other than that recommended.

(B) Age including body weight data and sex.

(C) Test environment including cage conditions, ambient temperature, humidity, and light/dark periods.

(D) Identification of animal diet.

(E) Acclimation period.

(iv) Test procedure should include the following data:

(A) Method of randomization used.

(B) Full description of experimental design and procedure.

(C) Dose regimen including levels, methods, and volume.

(v) Test results.

(A) Group animal data. Tabulation of toxic response data by species, strain, sex and exposure level for:

(*1*) Number of animals exposed.

(*2*) Number of animals showing signs of toxicity.

(*3*) Number of animals dying.

(B) Individual animal data. Data should be presented as summary (group mean) as well as for individual animals.

(*1*) Time of death during the study or whether animals survived to termination.

(*2*) Time of observation of each abnormal sign and its subsequent course.

(*3*) Body weight data.

(*4*) Feed and water (if collected) consumption data.

(*5*) Achieved dose (mg/kg/day) as a time-weighted average if the test substance is administered in the diet or drinking water.

(*6*) Results of ophthalmological examinations.

(*7*) Results of hematological tests performed.

(*8*) Results of clinical chemistry tests performed.

(*9*) Urinalysis tests performed and results.

(*10*) Results of observations made.

(*11*) Necropsy findings, including absolute and relative (to body weight) organ weight data.

(*12*) Detailed description of all histopathological findings.

(*13*) Statistical treatment of results, where appropriate.

(vi) In addition, for inhalation studies the following should be reported:

(A) Test conditions. The following exposure conditions must be reported:

(*1*) Description of exposure apparatus including design, type, dimensions, source of air, system for generating

particulate and aerosols, method of conditioning air, treatment of exhaust air and the method of housing the animals in a test chamber.

(*2*) The equipment for measuring temperature, humidity, and particulate aerosol concentrations and size should be described.

(B) Exposure data. These data should be tabulated and presented with mean values and a measure of variability (e.g., standard deviation) and should include:

(*1*) Airflow rates through the inhalation equipment.

(*2*) Temperature and humidity of air.

(*3*) Actual (analytical or gravimetric) concentration in the breathing zone.

(*4*) Nominal concentration (total amount of test substance fed into the inhalation equipment divided by volume of air).

(*5*) Particle size distribution, calculated MMAD, and geometric standard deviation.

(*6*) Explanation as to why the desired chamber concentration and/or particle size could not be achieved (if applicable) and the efforts taken to comply with this aspect of the guidelines.

(g) *Quality control.* A system should be developed and maintained to assure and document adequate performance of laboratory staff and equipment. The study must be conducted in compliance with 40 CFR Part 792—Good Laboratory Practice Standards.

(h) *References.* For additional background information on this test guideline, the following references should be consulted. These references are available for inspection at the TSCA Nonconfidential Information Center, Rm. NE–B607, Environmental Protection Agency, 401 M St., SW., Washington, DC, 12 noon to 4 p.m., Monday through Friday, except legal holidays.

(1) Benitz, K.F. Measurement of Chronic Toxicity. *Methods of Toxicology*. Ed. G.E. Paget. Blackwell, Oxford. pp. 82–131 (1970).

(2) Crofton K.M., Howard J.L., Moser V.C., Gill M.W., Leiter L.W., Tilson H.A., MacPhail, R.C. Interlaboratory Comparison of Motor Activity Experiments: Implication for Neurotoxicological Assessments. *Neurotoxicol. Teratol.* 13, 599–609. (1991)

(3) D'Aguanno, W. Drug Safety Evaluation--Pre-Clinical Considerations. *Industrial Pharmacology: Neuroleptic.* Vol. I, Ed. S. Fielding and H. Lal. Futura, Mt. Kisco, NY. pp. 317–332 (1974).

(4) Fitzhugh, O.G. Chronic Oral Toxicity, Appraisal of the Safety of Chemicals in Foods, Drugs and Cosmetics. The Association of Food and Drug Officials of the United States. pp. 36–45 (1959, 3rd Printing 1975).

(5) Gad S.C. A Neuromuscular Screen for Use in Industrial Toxicology. *Journal of Toxicology and Environmental Health*. 9, 691–704. (1982)

(6) Goldenthal, E.I. and D'Aguanno, W. Evaluation of Drugs, Appraisal of the Safety of Chemicals in Foods, Drugs, and Cosmetics. The Association of Food and Drug Officials of the United States. pp. 60–67 (1959, 3rd Printing 1975).

(7) Meyer O.A., Tilson H.A., Byrd W.C., Riley M.T. A Method for the Routine Assessment of Fore- and Hind-Limb Grip Strength of Rats and Mice. *Neurobehav. Toxicol.* 1, 233–236. (1979)

(8) Moser V.C., McDaniel K.M., Phillips P.M. Rat Strain and Stock Comparisons using a Functional Observational Battery: Baseline Values and Effects of Amitraz. *Toxicol. Appl. Pharmacol.* 108, 267–283 (1991)

(9) Organization for Economic Cooperation and Development. Guidelines for Testing of Chemicals, Section 4-Health Effects, Part 452 Chronic Toxicity Studies, Paris (1981).

(10) Page, N.P. Chronic Toxicity and Carcinogenicity Guidelines. *Journal of Environmental Pathology and Toxicology*. 11:161–182 (1977).

(11) Tupper, D.E., Wallace R.B. Utility of the Neurologic Examination in Rats. *Acta. Neurobiol. Exp.* 40, 999–1003 (1980).

(12) Weingand K., Brown G., Hall R. et al. (1996). Harmonization of Animal Clinical Pathology Testing in Toxicity and Safety Studies. *Fundam. and Appl. Toxicol.* 29:198–201.

[65 FR 78797, Dec. 15, 2000]

§ 799.9420 TSCA carcinogenicity.

(a) *Scope.* This section is intended to meet the testing requirements under section 4 of TSCA. The objective of a long-term carcinogenicity study is to observe test animals for a major portion of their life span for development of neoplastic lesions during or after exposure to various doses of a test substance by an appropriate route of administration.

(b) *Source.* The source material used in developing this TSCA test guideline is the OPPTS harmonized test guideline 870.4200 (June 1996 Public Draft). This source is available at the address in paragraph (g) of this section.

(c) *Definitions.* The following definitions apply to this section.

Carcinogenicity is the development of neoplastic lesions as a result of the repeated daily exposure of experimental animals to a chemical by the oral, dermal, or inhalation routes of exposure.

Cumulative toxicity is the adverse effects of repeated dose occurring as a result of prolonged action on, or increased concentration of, the administered test substance or its metabolites in susceptible tissues.

Dose in a carcinogenicity study is the amount of test substance administered via the oral, dermal or inhalation routes for a period of up to 24 months. Dose is expressed as weight of the test substance (grams, milligrams) per unit body weight of test animal (milligram per kilogram), or as weight of the test substance in parts per million (ppm) in food or drinking water. When exposed via inhalation, dose is expressed as weight of the test substance per unit volume of air (milligrams per liter) or as parts per million.

Target organ is any organ of a test animal showing evidence of an effect induced by a test substance.

(d) *Test procedures*—(1) *Animal selection*—(i) *Species and strain.* Testing shall be performed on two mammalian species. Rats and mice are the species of choice because of their relatively short life spans, limited cost of maintenance, widespread use in pharmacological and toxicological studies, susceptibility to tumor induction, and the availability of inbred or sufficiently characterized strains. Commonly used laboratory strains shall be used. If other mammalian species are used, the tester shall provide justification/reasoning for their selection.

(ii) *Age/weight.* (A) Testing shall be started with young healthy animals as soon as possible after weaning and acclimatization.

(B) Dosing should generally begin no later than 8 weeks of age.

(C) At commencement of the study, the weight variation of animals used shall not exceed ±20% of the mean weight for each sex.

(D) Studies using prenatal or neonatal animals may be recommended under special conditions.

(iii) *Sex.* (A) Equal numbers of animals of each sex shall be used at each dose level.

(B) Females shall be nulliparous and nonpregnant.

(iv) *Numbers.* (A) At least 100 rodents (50 males and 50 females) shall be used at each dose level and concurrent control group.

(B) If interim sacrifices are planned, the number shall be increased by the number of animals scheduled to be sacrificed during the course of the study.

(C) For a meaningful and valid statistical evaluation of long term exposure and for a valid interpretation of negative results, the number of animals in any group should not fall below 50% at 15 months in mice and 18 months in rats. Survival in any group should not fall below 25% at 18 months in mice and 24 months in rats.

(D) The use of adequate randomization procedures for the proper allocation of animals to test and control groups is required to avoid bias.

(E) Each animal shall be assigned a unique identification number. Dead animals, their preserved organs and tissues, and microscopic slides shall be identified by reference to the unique numbers assigned.

(v) *Husbandry.* (A) Animals may be group-caged by sex, but the number of animals per cage must not interfere with clear observation of each animal. The biological properties of the test substance or toxic effects (e.g., morbidity, excitability) may indicate a need for individual caging. Animals should be housed individually in dermal studies and during exposure in inhalation studies.

(B) The temperature of the experimental animal rooms should be at 22±3 °C.

(C) The relative humidity of the experimental animal rooms should be 30 to 70%.

(D) Where lighting is artificial, the sequence should be 12 h light/12 h dark.

(E) Control and test animals should be fed from the same batch and lot. The feed should be analyzed to assure uniform distribution and adequacy of nutritional requirements of the species tested and for impurities that might influence the outcome of the test. Animals should be fed and watered ad libitum with food replaced at least weekly.

(F) The study should not be initiated until animals have been allowed a period of acclimatization/quarantine to environmental conditions, nor should animals from outside sources be placed on test without an adequate period of quarantine.

(2) *Control and test substances.* (i) Where necessary, the test substance is dissolved or suspended in a suitable vehicle. If a vehicle or diluent is needed, it should not elicit toxic effects itself. It is recommended that wherever possible the use of an aqueous solution be considered first, followed by consideration of solution in oil, and finally solution in other vehicles.

(ii) One lot of the test substance should be used, if possible, throughout the duration of the study, and the research sample should be stored under conditions that maintain its purity and stability. Prior to the initiation of the study, there should be a characterization of the test substance, including the purity of the test compound, and, if possible, the name and quantities of contaminants and impurities.

(iii) If the test or control substance is to be incorporated into feed or another vehicle, the period during which the test substance is stable in such a mixture should be determined prior to the initiation of the study. Its homogeneity and concentration should be determined prior to the initiation of the study and periodically during the study. Statistically randomized samples of the mixture should be analyzed to ensure that proper mixing, formulation, and storage procedures are being followed, and that the appropriate concentration of the test or control substance is contained in the mixture.

(3) *Control groups.* A concurrent control group (50 males and 50 females) is required. This group shall be untreated or if a vehicle is used in administering the test substance, a vehicle control group. If the toxic properties of the vehicle are not known, both untreated and vehicle control groups are required.

(4) *Dose levels and dose selection.* (i) For risk assessment purposes, at least three dose levels shall be used, in addition to the concurrent control group. Dose levels should be spaced to produce a gradation of effects. A rationale for the doses selected must be provided.

(ii) The highest dose level should elicit signs of toxicity without substantially altering the normal life span due to effects other than tumors. The highest dose should be determined based on the findings from a 90–day study to ensure that the dose used is adequate to asses the carcinogenic potential of the test substance. Thus, the selection of the highest dose to be tested is dependent upon changes observed in several toxicological parameters in subchronic studies. The highest dose tested need not exceed 1,000 mg/kg/day.

(iii) The intermediate-dose level should be spaced to produce a gradation of toxic effects.

(iv) The lowest dose level should produce no evidence of toxicity.

(v) For skin carcinogenicity studies, when toxicity to the skin is a determining factor, the highest dose selected should not destroy the functional integrity of the skin, the intermediate dose should be a minimally irritating dose, and the low dose should be the highest nonirritating dose.

(vi) The criteria for selecting the dose levels for skin carcinogenicity studies, based on gross and histopathologic dermal lesions, are as follows:

(A) Gross criteria for reaching the high dose:

(*1*) Erythema (moderate).

(*2*) Scaling.

(*3*) Edema (mild).

(*4*) Alopecia.

(*5*) Thickening.

(B) Histologic criteria for reaching the high dose:

(*1*) Epidermal hyperplasia.

(*2*) Epidermal hyperkeratosis.

(*3*) Epidermal parakeratosis.

(*4*) Adnexal atrophy/hyperplasia.

(*5*) Fibrosis.

(*6*) Spongiosis (minimal-mild).

(*7*) Epidermal edema (minimal-mild).

(*8*) Dermal edema (minimal-moderate).

(*9*) Inflammation (moderate).

(C) Gross criteria for exceeding the high dose:

(*1*) Ulcers, fissures.

(*2*) Exudate/crust (eschar).

(*3*) nonviable (dead) tissues.

(*4*) Anything leading to destruction of the functional integrity of the epidermis (e.g., caking, fissuring, open sores, eschar).

(D) Histologic criteria for exceeding the high dose:

(*1*) Crust (interfollicular and follicular).

(*2*) Microulcer.

(*3*) Degeneration/necrosis (mild to moderate).

(*4*) Epidermal edema (moderate to marked).

(*5*) Dermal edema (marked).

(*6*) Inflammation (marked).

(5) *Administration of the test substance.* The three main routes of administration are oral, dermal, and inhalation. The choice of the route of administration depends upon the physical and chemical characteristics of the test substance and the form typifying exposure in humans.

(i) *Oral studies.* If the test substance is administered by gavage, the animals are dosed with the test substance on a 7–day per week basis for a period of at least 18 months for mice and hamsters and 24 months for rats. However, based primarily on practical considerations, dosing by gavage or via a capsule on a 5–day per week basis is acceptable. If the test substance is administered in the drinking water or mixed in the diet, then exposure should be on a 7–day per week basis.

(ii) *Dermal studies.* (A) The animals should be treated with the test substance for at least 6 h/day on a 7–day per week basis for a period of at least 18 months for mice and hamsters and 24 months for rats. However, based primarily on practical considerations, application on a 5–day per week basis is acceptable. Dosing should be conducted at approximately the same time each day.

(B) Fur should be clipped weekly from the dorsal area of the trunk of the test animals. Care should be taken to avoid abrading the skin which could alter its permeability. A minimum of 24 hrs should be allowed for the skin to recover before the next dosing of the animal.

(C) Preparation of test substance. Liquid test substances are generally used undiluted, except as indicated in paragraph (e)(4)(vi) of this section. Solids should be pulverized when possible. The substance should be moistened sufficiently with water or, when necessary, with a suitable vehicle to ensure good contact with the skin. When a vehicle is used, the influence of the vehicle on toxicity of, and penetration of the skin by, the test substance should be taken into account. The volume of application should be kept constant, e.g. less than 100 uL for the mouse and less than 300 uL for the rat. Different concentrations of test solution should be prepared for different dose levels.

(D) The test substance shall be applied uniformly over a shaved area which is approximately 10 percent of the total body surface area. In order to dose approximately 10 percent of the body surface, the area starting at the scapulae (shoulders) to the wing of the ileum (hipbone) and half way down the flank on each side of the animal should be shaved. With highly toxic substances, the surface area covered may be less, but as much of the area as possible should be covered with as thin and uniform a film as practical.

(iii) *Inhalation studies.* (A) The animals should be exposed to the test substance for 6 h/day on a 7–day per week basis, for a period of at least 18 months in mice and 24 months in rats. However, based primarily on practical considerations, exposure for 6 h/day on a 5–day per week basis is acceptable.

(B) The animals shall be tested in dynamic inhalation equipment designed to sustain a minimum air flow of 10 air changes per hr, an adequate oxygen content of at least 19%, and uniform conditions throughout the exposure chamber. Maintenance of slight negative pressure inside the chamber will prevent leakage of the test substance into surrounding areas.

(C) The selection of a dynamic inhalation chamber should be appropriate for the test substance and test system. Where a whole body chamber is used to expose animals to an aerosol, individual housing must be used to minimize crowding of the test animals and maximize their exposure to the test substance. To ensure stability of a chamber atmosphere, the total volume occupied by the test animals shall not exceed 5% of the volume of the test

chamber. It is recommended, but not required, that nose-only or head-only exposure be used for aerosol studies in order to minimize oral exposures due to animals licking compound off their fur. Heat stress to the animals should be minimized.

(D) The temperature at which the test is performed should be maintained at 22±2 °C. The relative humidity should be maintained between 40 to 60%, but in certain instances (e.g., tests of aerosols, use of water vehicle) this may not be practicable.

(E) The rate of air flow shall be monitored continuously but recorded at least three times during exposure.

(F) Temperature and humidity shall be monitored continuously but should be recorded at least every 30 minutes.

(G) The actual concentration of the test substance shall be measured in the breathing zone. During the exposure period, the actual concentrations of the test substance should be held as constant as practicable, monitored continuously or intermittently depending on the method of analysis. Chamber concentrations may be measured using gravimetric or analytical methods as appropriate. If trial run measurements are reasonably consistent (plus or minus 10 percent for liquid aerosol, gas, or vapor; plus or minus 20 percent for dry aerosol), the two measurements should be sufficient. If measurements are not consistent, then three to four measurements should be taken.

(H) During the development of the generating system, particle size analysis shall be performed to establish the stability of aerosol concentrations with respect to particle size. Measurement of aerodynamic particle size in the animals's breathing zone should be measured during a trial run. If median aerodynamic diameter (MMAD) values for each exposure level are within 10% of each other, then two measurements during the exposures should be sufficient. If pretest measurements are not within 10% of each other, three to four measurements should be taken. The MMAD particle size range should be between 1–3 μm. The particle size of hygroscopic materials should be small enough to allow pulmonary deposition once the particles swell in the moist environment of the respiratory tract.

(I) Feed shall be withheld during exposure. Water may also be withheld during exposure.

(6) *Observation period.* It is necessary that the duration of the carcinogenicity study comprise the majority of the normal life span of the strain of animals used. This time period shall not be less than 24 months for rats and 18 months for mice, and ordinarily not longer than 30 months for rats and 24 months for mice. For longer time periods, and where any other species are used, consultation with the Agency in regard to the duration of the study is advised.

(7) *Observation of animals.* (i) Observations shall be made at least once each day for morbidity and mortality. Appropriate actions should be taken to minimize loss of animals from the study (e.g., necropsy or refrigeration of those animals found dead and isolation or sacrifice of weak or moribund animals).

(ii) A careful clinical examination shall be made at least once weekly. Observations should be detailed and carefully recorded, preferably using explicitly defined scales. Observations should include, but not be limited to, evaluation of skin and fur, eyes and mucous membranes, respiratory and circulatory effects, autonomic effects such as salivation, central nervous system effects, including tremors and convulsions, changes in the level of activity, gait and posture, reactivity to handling or sensory stimuli, altered strength and stereotypes or bizarre behavior (e.g., self-mutilation, walking backwards).

(iii) Body weights shall be recorded individually for all animals; once a week during the first 13 weeks of the study and at least once every 4 weeks, thereafter, unless signs of clinical toxicity suggest more frequent weighing to facilitate monitoring of health status.

(iv) Measurements of feed consumption should be determined weekly during the first 13 weeks of the study and at approximately monthly intervals thereafter unless health status or body weight changes dictate otherwise. Measurement of water consumption

should be determined at the same intervals if the test substance is administered in the drinking water.

(v) Moribund animals shall be removed and sacrificed when noticed and the time of death should be recorded as precisely as possible. At the end of the study period, all survivors shall be sacrificed.

(8) *Clinical pathology*. At 12 months, 18 months, and at terminal sacrifice, a blood smear shall be obtained from all animals. A differential blood count should be performed on blood smears from those animals in the highest dosage group and the controls from the terminal sacrifice. If these data, or data from the pathological examination indicate a need, then the 12– and 18–month blood smears should also be examined. Differential blood counts should be performed for the next lower groups if there is a major discrepancy between the highest group and the controls. If clinical observations suggest a deterioration in health of the animals during the study, a differential blood count of the affected animals shall be performed.

(9) *Gross necropsy*. (i) A complete gross examination shall be performed on all animals, including those that died during the experiment or were killed in a moribund condition.

(ii) At least the liver, kidneys, adrenals, testes, epididymides, ovaries, uterus, spleen, brain, and heart should be weighed wet as soon as possible after dissection to avoid drying. The lungs should be weighed if the test substance is administered by the inhalation route. The organs should be weighed from interim sacrifice animals as well as from at least 10 animals per sex per group at terminal sacrifice.

(iii) The following organs and tissues, or representative samples thereof, shall be preserved in a suitable medium for possible future histopathological examination.

(A) Digestive system.

(*1*) Salivary glands.

(*2*) Esophagus.

(*3*) Stomach.

(*4*) Duodenum.

(*5*) Jejunum.

(*6*) Ileum.

(*7*) Cecum.

(*8*) Colon.

(*9*) Rectum.

(*10*) Liver.

(*11*) Pancreas.

(*12*) Gallbladder (mice).

(B) Nervous system.

(*1*) Brain (multiple sections).

(*2*) Pituitary.

(*3*) Peripheral nerves.

(*4*) Spinal cord (three levels).

(*5*) Eyes (retina, optic nerve).

(C) Glandular system.

(*1*) Adrenals.

(*2*) Parathyroids.

(*3*) Thyroids.

(D) Respiratory system.

(*1*) Trachea.

(*2*) Lung.

(*3*) Pharynx.

(*4*) Larynx.

(*5*) Nose.

(E) Cardiovascular/hematopoietic system.

(*1*) Aorta (thoracic).

(*2*) Heart.

(*3*) Bone marrow.

(*4*) Lymph nodes.

(*5*) Spleen.

(F) Urogenital system.

(*1*) Kidneys.

(*2*) Urinary bladder.

(*3*) Prostate.

(*4*) Testes/epididymides.

(*5*) Seminal vesicles.

(*6*) Uterus.

(*7*) Ovaries.

(*8*) Female mammary gland.

(G) Other.

(*1*) Skin.

(*2*) All gross lesions and masses.

(iv) In inhalation studies, the entire respiratory tract, including nose, pharynx, larynx, and paranasal sinuses should be examined and preserved. In dermal studies, skin from treated and adjacent control skin sites should be examined and preserved.

(v) Inflation of lungs and urinary bladder with a fixative is the optimal method for preservation of these tissues. The proper inflation and fixation of the lungs in inhalation studies is essential for appropriate and valid histopathological examination.

(vi) Information from clinical pathology, and other in-life data should be considered before microscopic examination, since they may provide significant guidance to the pathologist.

(10) *Histopathology*. (i) The following histopathology shall be performed:

(A) Full histopathology on the organs and tissues under paragraph (d)(9)(iii) of this section of all animals in the control and high dose groups and all animals that died or were killed during the study.

(B) All gross lesions in all animals.

(C) Target organs in all animals.

(ii) If the results show substantial alteration of the animal's normal life span, the induction of effects that might affect a neoplastic response, or other effects that might compromise the significance of the data, the next lower dose levels shall be examined as described in paragraph (d)(10)(i) of this section.

(iii) An attempt should be made to correlate gross observations with microscopic findings.

(iv) Tissues and organs designated for microscopic examination should be fixed in 10 percent buffered formalin or a recognized suitable fixative as soon as necropsy is performed and no less than 48 hours prior to trimming.

(e) *Data and reporting*—(1) *Treatment of results.* (i) Data shall be summarized in tabular form, showing for each test group the number of animals at the start of the test, the number of animals showing lesions, the types of lesions, and the percentage of animals displaying each type of lesion.

(ii) All observed results (quantitative and qualitative) shall be evaluated by an appropriate statistical method. Any generally accepted statistical methods may be used; the statistical methods including significance criteria shall be selected during the design of the study.

(2) *Evaluation of study results.* (i) The findings of a carcinogenicity study should be evaluated in conjunction with the findings of previous studies and considered in terms of the toxic effects, the necropsy and histopathological findings. The evaluation shall include the relationship between the dose of the test substance and the presence, incidence, and severity of abnormalities (including behavioral and clinical abnormalities), gross lesions, identified target organs, body weight changes, effects on mortality, and any other general or specific toxic effects.

(ii) In any study which demonstrates an absence of toxic effects, further investigation to establish absorption and bioavailablity of the test substance should be considered.

(iii) In order for a negative test to be acceptable, it must meet the following criteria: No more than 10% of any group is lost due to autolysis, cannibalism, or management problems; and survival in each group is no less than 50% at 15 months for mice and 18 months for rats. Survival should not fall below 25% at 18 months for mice and 24 months for rats.

(iv) The use of historical control data from an appropriate time period from the same testing laboratory (i.e., the incidence of tumors and other suspect lesions normally occurring under the same laboratory conditions and in the same strain of animals employed in the test) is helpful for assessing the significance of changes observed in the current study.

(3) *Test report.* (i) In addition to the reporting requirements as specified under 40 CFR part 792, subpart J, the following specific information shall be reported. Both individual and summary data should be presented.

(A) Test substance characterization should include:

(*1*) Chemical identification.

(*2*) Lot or batch number.

(*3*) Physical properties.

(*4*) Purity/impurities.

(*5*) Identification and composition of any vehicle used.

(B) Test system should contain data on:

(*1*) Species and strain of animals used and rationale for selection if other than that recommended.

(*2*) Age including body weight data and sex.

(*3*) Test environment including cage conditions, ambient temperature, humidity, and light/dark periods.

(*4*) Identification of animal diet.

(*5*) Acclimation period.

(C) Test procedure should include the following data:

(*1*) Method of randomization used.

(*2*) Full description of experimental design and procedure.

(*3*) Dose regimen including levels, methods, and volume.

(4) *Test results*—(i) *Group animal data.* Tabulation of toxic response data by

species, strain, sex, and exposure level for:

(A) Number of animals exposed.

(B) Number of animals showing signs of toxicity.

(C) Number of animals dying.

(ii) *Individual animal data.* Data should be presented as summary (group mean) as well as for individual animals.

(A) Time of death during the study or whether animals survived to termination.

(B) Time of observation of each abnormal sign and its subsequent course.

(C) Body weight data.

(D) Feed and water consumption data, when collected.

(E) Results of clinical pathology and immunotoxicity screen when performed.

(F) Necropsy findings including absolute/relative organ weight data.

(G) Detailed description of all histopathological findings.

(H) Statistical treatment of results where appropriate.

(I) Historical control data.

(J) Achieved dose (mg/kg/day) as a time-weighted average if the test substance is administered in the diet or drinking water.

(iii) *Inhalation studies.* In addition, for inhalation studies the following shall be reported:

(A) *Test conditions.* The following exposure conditions shall be reported.

(*1*) Description of exposure apparatus including design, type, dimensions, source of air, system for generating particulate and aerosols, method of conditioning air, treatment of exhaust air and the method of housing the animals in a test chamber.

(*2*) The equipment for measuring temperature, humidity, and particulate aerosol concentrations and size should be described.

(B) *Exposure data.* These shall be tabulated and presented with mean values and a measure of variability (e.g. standard deviation) and should include:

(*1*) Airflow rates through the inhalation equipment.

(*2*) Temperature and humidity of air.

(*3*) Actual (analytical or gravimetric) concentration in the breathing zone.

(*4*) Nominal concentration (total amount of test substance fed into the inhalation equipment divided by volume of air).

(*5*) Particle size distribution, calculated MMAD and geometric standard deviation (GSD).

(*6*) Explanation as to why the desired chamber concentration and/or particle size could not be achieved (if applicable) and the efforts taken to comply with this aspect of the sections.

(f) *Quality assurance.* A system shall be developed and maintained to assure and document adequate performance of laboratory staff and equipment. The study shall be conducted in compliance with 40 CFR part 792—Good Laboratory Practice Standards.

(g) *References.* For additional background information on this test guideline, the following references should be consulted. These references are available for inspection at the TSCA Nonconfidential Information Center, Rm. NE–B607, Environmental Protection Agency, 401 M St., SW., Washington, DC, 12 noon to 4 p.m., Monday through Friday, except legal holidays.

(1) Benitz, K.F. Ed. Paget, G.E. Measurement of Chronic Toxicity. *Methods of Toxicology* (Blackwell, Oxford, 1970) pp. 82–131.

(2) Fitzhugh, O.G. Chronic Oral Toxicity, Appraisal of the Safety of Chemicals in Foods, Drugs and Cosmetics. The Association of Food and Drug Officials of the United States. pp. 36–45 (1959, 3rd Printing 1975).

(3) Goldenthal, E.I. and D'Aguanno, W. Evaluation of Drugs, Appraisal of the Safety of Chemicals in Foods, Drugs, and Cosmetics. The Association of Food and Drug Officials of the United States. pp. 60–67 (1959, 3rd Printing 1975).

(4) Organisation for Economic Co-operation and Development. Guidelines for Testing of Chemicals, Section 4–Health Effects, Part 451 Carcinogenicity Studies (Paris, 1981).

(5) Page, N.P. Chronic Toxicity and Carcinogenicity Guidelines. *Journal of Environmental Pathology and Toxicology*. 11:161–182 (1977).

(6) Page, N.P. Eds. Kraybill and Mehlman. Concepts of a Bioassay Program in Environmental Carcinogenesis. Vol.3. *Advances in Modern Toxicology* (Hemisphere, Washington, DC., 1977) pp. 87–171.

(7) Sontag, J.M. *et al.* Guidelines for Carcinogen Bioassay in Small Rodents. NCI-CS-TR-1 United States Cancer Institute, Division of Cancer Control and Prevention, Carcinogenesis Bioassay Program (Bethesda, MD).

[62 FR 43824, Aug. 15, 1997, as amended at 64 FR 35078, June 30, 1999]

§ 799.9430 TSCA combined chronic toxicity/carcinogenicity.

(a) *Scope.* This section is intended to meet the testing requirements under section 4 of the Toxic Substances Control Act (TSCA). The objective of a combined chronic toxicity/carcinogenicity study is to determine the effects of a substance in a mammalian species following prolonged and repeated exposure. The application of this section should generate data which identify the majority of chronic and carcinogenicity effects and determine dose-response relationships. The design and conduct should allow for the detection of neoplastic effects and a determination of the carcinogenic potential as well as general toxicity, including neurological, physiological, biochemical, and hematological effects and exposure-related morphological (pathology) effects.

(b) *Source.* The source material used in developing this TSCA test guideline is the Office of Prevention, Pesticides, and Toxic Substances (OPPTS) harmonized test guideline 870.4300 (August 1998, final guideline). This source is available at the address in paragraph (h) of this section.

(c) *Definitions.* The following definitions apply to this section.

Carcinogenicity is the development of neoplastic lesions as a result of the repeated daily exposure of experimental animals to a chemical by the oral, dermal, or inhalation routes of exposure.

Chronic toxicity is the adverse effects occurring as a result of the repeated daily exposure of experimental animals to a chemical by the oral, dermal, or inhalation routes of exposure.

Cumulative toxicity is the adverse effects of repeated dose occurring as a result of prolonged action on, or increased concentration of, the administered test substance or its metabolites in susceptible tissues.

Dose in a combined chronic toxicity/carcinogenicity study is the amount of test substance administered via the oral, dermal, or inhalation routes for a period of up to 24 months. Dose is expressed as weight of the test substance per unit body weight of test animal (milligrams per kilogram), or as weight of the test substance in parts per million (ppm) in food or drinking water. When exposed via inhalation, dose is expressed as weight of the test substance per unit volume of air (milligrams per liter) or as parts per million per day. For dermal application, dose is expressed as weight of the test substance (grams, milligrams) per unit body weight of the test animal (milligrams per kilogram) or as weight of the substance per unit surface area (milligrams per square centimeter) per day.

No-observed-effects level (NOEL) is the maximum dose used in a study which produces no observed adverse effects. The NOEL is usually expressed in terms of the weight of a test substance given daily per unit weight of test animal (milligrams per kilogram per day).

Target organ is any organ of a test animal showing evidence of an effect induced by a test substance.

(d) *Limit test.* If a test at one dose level of at least 1,000 mg/kg body weight (expected human exposure may indicate the need for a higher dose level), using the procedures described for this study, produces no observable toxic effects or if toxic effects would not be expected based upon data of structurally related compounds, then a full study using three dose levels might not be necessary.

(e) *Test procedures*—(1) *Animal selection*—(i) *Species and strain.* Preliminary studies providing data on acute, subchronic, and metabolic responses should have been carried out to permit an appropriate choice of animals (species and strain). As discussed in other guidelines, the mouse and rat have been most widely used for assessment of carcinogenic potential, while the rat and dog have been most often studied for chronic toxicity. For the combined chronic toxicity/carcinogenicity study via the oral and inhalation routes, the rat is the species of choice and for the dermal route, the mouse is species of choice. If other species are used, the tester must provide justification/reasoning for their selection. The strain selected should be susceptible to the carcinogenic or toxic effect of the class of substances being tested, if known, and provided it does not have a spontaneous background incidence too high for meaningful assessment. Commonly

used laboratory strains must be employed.

(ii) *Age/weight.* (A) Testing must be started with young healthy animals as soon as possible after weaning and acclimatization.

(B) Dosing should generally begin no later than 8 weeks of age.

(C) At commencement of the study, the weight variation of animals used must be within 20% of the mean weight for each sex.

(D) Studies using prenatal or neonatal animals may be recommended under special conditions.

(iii) *Sex.* (A) Equal numbers of animals of each sex must be used at each dose level.

(B) Females must be nulliparous and nonpregnant.

(iv) *Numbers.* (A) At least 100 rodents (50 males and 50 females) must be used at each dose level and concurrent control group. At least 20 additional rodents (10 males and 10 females) should be used for satellite dose groups and the satellite control group. The purpose of the satellite group is to allow for the evaluation of chronic toxicity after 12 months of exposure to the test substance.

(B) For a meaningful and valid statistical evaluation of long term exposure and for a valid interpretation of negative results, the number of animals in any group should not fall below 50% at 15 months in mice and 18 months in rats. Survival in any group should not fall below 25% at 18 months in mice and 24 months in rats.

(C) To avoid bias, the use of adequate randomization procedures for the proper allocation of animals to test and control groups is required.

(D) Each animal must be assigned a unique identification number. Dead animals (and their preserved organs) and tissues, and microscopic slides shall be identified by reference to the unique numbers assigned.

(v) *Husbandry.* (A) Animals may be group-caged by sex, but the number of animals per cage must not interfere with clear observation of each animal. The biological properties of the test substance or toxic effects (e.g., morbidity, excitability) may indicate a need for individual caging. Rodents should be housed individually in dermal studies and during exposure in inhalation studies.

(B) The temperature of the experimental animal rooms should be at 22 ± 3 °C.

(C) The relative humidity of the experimental animal rooms should be 50 ± 20%.

(D) Where lighting is artificial, the sequence should be 12 hours light/12 hours dark.

(E) Control and test animals should be fed from the same batch and lot. The feed should be analyzed to assure uniform distribution and adequacy of nutritional requirements of the species tested and for impurities that might influence the outcome of the test. Animals should be fed and watered ad libitum with food replaced at least weekly.

(F) The study should not be initiated until animals have been allowed a period of acclimatization/quarantine to environmental conditions, nor should animals from outside sources be placed on test without an adequate period of quarantine. An acclimation period of at least five days is recommended.

(2) *Control and test substances.* (i) Where necessary, the test substance is dissolved or suspended in a suitable vehicle. If a vehicle or diluent is needed, it should not elicit toxic effects itself nor substantially alter the chemical or toxicological properties of the test substance. It is recommended that wherever possible the usage of an aqueous solution be considered first, followed by consideration of a solution in oil, and finally solution in other vehicles.

(ii) One lot of the test substance should be used throughout the duration of the study if possible, and the research sample should be stored under conditions that maintain its purity and stability. Prior to the initiation of the study, there should be a characterization of the test substance, including the purity of the test compound, and, if possible, the name and quantities of contaminants and impurities.

(iii) If the test or control substance is to be incorporated into feed or another vehicle, the period during which the test substance is stable in such a mixture should be determined prior to the initiation of the study. Its homogeneity and concentration should be

determined prior to the initiation of the study and periodically during the study. Statistically randomized samples of the mixture should be analyzed to ensure that proper mixing, formulation, and storage procedures are being followed, and that the appropriate concentration of the test or control substance is contained in the mixture.

(3) *Control groups.* A concurrent control group is required. This group should be an untreated or sham-treated control group or, if a vehicle is used in administering the test substance, a vehicle control group. If the toxic properties of the vehicle are not known or cannot be made available, both untreated and vehicle control groups are required.

(4) *Dose levels and dose selection.* (i) For risk assessment purposes, at least three dose levels must be used, in addition to the concurrent control group. Dose levels should be spaced to produce a gradation of effects. A rationale for the doses selected must be provided.

(ii) The highest dose level in rodents should elicit signs of toxicity without substantially altering the normal life span due to effects other than tumors. The highest dose should be determined based on the findings from a 90–day study to ensure that the dose used is adequate to assess the chronic toxicity and the carcinogenic potential of the test substance. Thus, the selection of the highest dose to be tested is dependent upon changes observed in several toxicological parameters in subchronic studies. The highest dose tested need not exceed 1,000 mg/kg/day.

(iii) The intermediate-dose levels should be spaced to produce a gradation of toxic effects.

(iv) The lowest-dose level should produce no evidence of toxicity.

(v) For skin carcinogenicity studies, when toxicity to the skin is a determining factor, the highest dose selected should not destroy the functional integrity of the skin, the intermediate doses should be a minimally irritating dose and the low dose should be the highest nonirritating dose.

(vi) The criteria for selecting the dose levels for skin carcinogenicity studies, based on gross and histopathologic dermal lesions, are as follows:

(A) Gross criteria for reaching the high dose:

(*1*) Erythema (moderate).

(*2*) Scaling.

(*3*) Edema (mild).

(*4*) Alopecia.

(*5*) Thickening.

(B) Histologic criteria for reaching the high dose:

(*1*) Epidermal hyperplasia.

(*2*) Epidermal hyperkeratosis.

(*3*) Epidermal parakeratosis.

(*4*) Adnexal atrophy/hyperplasia.

(*5*) Fibrosis.

(*6*) Spongiosis (minimal-mild).

(*7*) Epidermal edema (minimal-mild).

(*8*) Dermal edema (minimal-moderate).

(*9*) Inflammation (moderate).

(C) Gross criteria for exceeding the high dose:

(*1*) Ulcers-fissures, exudate/crust (eschar), nonviable (dead) tissues.

(*2*) Anything leading to destruction of the functional integrity of the epidermis (e.g., caking, fissuring, open sores, eschar).

(D) Histologic criteria for exceeding the high-dose:

(*1*) Crust (interfollicular and follicular).

(*2*) Microulcer.

(*3*) Degeneration/necrosis (mild to moderate).

(*4*) Epidermal edema (moderate to marked).

(*5*) Dermal edema (marked).

(*6*) Inflammation (marked).

(5) *Administration of the test substance.* The three main routes of administration are oral, dermal, and inhalation. The choice of the route of administration depends upon the physical and chemical characteristics of the test substance and the form typifying exposure in humans.

(i) *Oral studies.* If the test substance is administered by gavage, the animals are dosed with the test substance on a 7–day per week basis for a period of at least 18 months for mice and hamsters and 24 months for rats. However, based primarily on practical considerations, dosing by gavage on a 5–day per week basis is acceptable. If the test substance is administered in the drinking water or mixed in the diet, then exposure should be on a 7–day per week basis.

(ii) *Dermal studies.* (A) Preparation of animal skin. Shortly before testing, fur should be clipped from not less than 10% of the body surface area for application of the test substance. In order to dose approximately 10% of the body surface, the area starting at the scapulae (shoulders) to the wing of the ileum (hipbone) and half way down the flank on each side of the animal should be shaved. Shaving should be carried out approximately 24 hours before dosing. Repeated clipping or shaving is usually needed at approximately weekly intervals. When clipping or shaving the fur, care should be taken to avoid abrading the skin which could alter its permeability.

(B) Preparation of test substance. Liquid test substances are generally used undiluted, except as indicated in paragraph (e)(4)(vi) of this section. Solids should be pulverized when possible. The substance should be moistened sufficiently with water or, when necessary, with a suitable vehicle to ensure good contact with the skin. When a vehicle is used, the influence of the vehicle on toxicity of, and penetration of the skin by, the test substance should be taken into account.The volume of application should be kept constant, e.g., less than 100 µL for the mouse and less than 300 µL for the rat. Different concentrations of test solution should be prepared for different dose levels.

(C) Administration of test substance. The duration of exposure should be at least 18 months for mice and hamsters and 24 months for rats. Ideally, the animals should be treated with test substance for at least 6 hours per day on a 7-day per week basis. However, based on practical considerations, application on a 5-day per week basis is acceptable. Dosing should be conducted at approximately the same time each day. The test substance must be applied uniformly over the treatment site.The surface area covered may be less for highly toxic substances. As much of the area should be covered with as thin and uniform a film as possible. For rats, the test substance may be held in contact with the skin with a porous gauze dressing and nonirritating tape if necessary. The test site should be further covered in a suitable manner to retain the gauze dressing plus test substance and to ensure that the animals cannot ingest the test substance. The application site should not be covered when the mouse is the species of choice. The test substance may be wiped from the skin after the 6-hour exposure period to prevent ingestion.

(iii) *Inhalation studies.* (A) The animals should be exposed to the test substance, for 6 hours per day on a 7–day per week basis, for a period of at least 18 months in mice and 24 months in rats. However, based primarily on practical considerations, exposure for 6 hours per day on a 5–day per week basis is acceptable.

(B) The animals must be tested in dynamic inhalation equipment designed to sustain a minimum air flow of 10 air changes per hour, an adequate oxygen content of at least 19%, and uniform conditions throughout the exposure chamber. Maintenance of slight negative pressure inside the chamber will prevent leakage of the test substance into surrounding areas. It is not normally necessary to measure chamber oxygen concentration if airflow is adequate.

(C) The selection of a dynamic inhalation chamber should be appropriate for the test substance and test system. Where a whole body chamber is used, individual housing must be used to minimize crowding of the test animals and maximize their exposure to the test substance. To ensure stability of a chamber atmosphere, the total volume occupied by the test animals shall not exceed 5% of the volume of the test chamber. It is recommended, but not required, that nose-only or head-only exposure be used for aerosol studies in order to minimize oral exposures due to animals licking compound off their fur. The animals should be acclimated and heat stress minimized.

(D) The temperature at which the test is performed should be maintained at 22 ± 2 °C. The relative humidity should be maintained between 40 to 60%, but in certain instances (e.g., tests of aerosols, use of water vehicle) this may not be practicable.

(E) The rate of air flow must be monitored continuously but recorded at least three times during the exposure.

(F) Temperature and humidity must be monitored continuously but should be recorded at least every 30 minutes.

(G) The actual concentrations of the test substance must be measured in the animal's breathing zone. During the exposure period, the actual concentrations of the test substance must be held as constant as practicable and monitored continuously or intermittently depending on the method of analysis. Chamber concentration may be measured using gravimetric or analytical methods as appropriate. If trial run measurements are reasonably consistent (± 10% for liquid aerosol, gas, or vapor; ± 20% for dry aerosol), then two measurements should be sufficient. If measurements are not consistent, three to four measurements should be taken. If there is some difficulty in measuring chamber analytical concentration due to precipitation, nonhomogeneous mixtures, volatile components, or other factors, additional analyses of inert components may be necessary.

(H) During the development of the generating system, particle size analysis must be performed to establish the stability of aerosol concentrations with respect to particle size. The mass median aerodynamic diameter (MMAD) particle size range should be between 1–3 µm. The particle size of hygroscopic materials should be small enough when dry to assure that the size of the swollen particle will still be within the 1–3 µm range. Measurements of aerodynamic particle size in the animal's breathing zone should be measured during a trial run. If MMAD values for each exposure level are within 10% of each other, then two measurements during the exposures should be sufficient. If pretest measurements are not within 10% of each other, three to four measurements should be taken.

(I) Feed must be withheld during exposure. Water may also be withheld during exposure.

(J) When the physical and chemical properties of the test substance show a low flash point or the test substance is otherwise known or thought to be explosive, care must be taken to avoid exposure level concentrations that could result in an exposure chamber explosion during the test.

(6) *Observation period.* (i) This time period must not be less than 24 months for rats and 18 months for mice, and ordinarily not longer than 30 months for rats and 24 months for mice. For longer time periods, and where any other species are used, consultation with the Agency in regard to the duration of the study is advised.

(ii) Animals in a satellite group to assess chronic toxicity should be observed for 12 months.

(7) *Observation of animals.* (i) Observations must be made at least twice each day for morbidity and mortality. Appropriate actions should be taken to minimize loss of animals to the study (e.g., necropsy or refrigeration of those animals found dead and isolation or sacrifice of weak or moribund animals). General clinical observations shall be made at least once a day, preferably at the same time each day, taking into consideration the peak period of anticipated effects after dosing. The clinical condition of the animal should be recorded.

(ii) A careful clinical examination must be made at least once weekly. Observations should be detailed and carefully recorded, preferably using explicity defined scales. Observations should include, but not be limited to, evaluation of skin and fur, eyes and mucous membranes, respiratory and circulatory effects, autonomic effects such as salivation, central nervous system effects, including tremors and convulsions, changes in the level of activity, gait and posture, reactivity to handling or sensory stimuli, altered strength, and stereotypes or bizarre behavior (e.g., self-mutilation, walking backwards).

(iii) Signs of toxicity should be recorded as they are observed including the time of onset, degree and duration.

(iv) Body weights must be recorded individually for all animals once prior to administration of the test substance, once a week during the first 13 weeks of the study and at least once every 4 weeks thereafter unless signs of clinical toxicity suggest more frequent weighing to facilitate monitoring of health status.

(v) Measurements of feed consumption should be determined weekly during the first 13 weeks of the study and

then at approximately monthly intervals unless health status or body weight changes dictate otherwise. Measurements of water consumption should be determined at the same intervals if the test material is administered in drinking water.

(vi) Moribund animals must be removed and sacrificed when noticed and the time of death should be recorded as precisely as possible. At the end of the study period, all survivors must be sacrificed. Animals in the satellite group must be sacrificed after 12 months of exposure to the test substance (interim sacrifice).

(8) *Clinical pathology*. Hematology, clinical chemistry and urinalyses must be performed from 10 animals per sex per group. The parameters should be examined at approximately 6 month intervals during the first 12 months of the study. If possible, these collections should be from the same animals at each interval. If hematological and biochemical effects are seen in the subchronic study, testing shall also be performed at 3 months. Overnight fasting of animals prior to blood sampling is recommended.

(i) *Hematology*. The recommended parameters are red blood cell count, hemoglobin concentration, hematocrit, mean corpuscular volume, mean corpuscular hemoglobin, and mean corpuscular hemoglobin concentration, white blood cell count, differential leukocyte count, platelet count, and a measure of clotting potential, such as prothrombin time or activated partial thromboplastin time.

(ii) *Clinical chemistry*. (A) Parameters which are considered appropriate to all studies are electrolyte balance, carbohydrate metabolism, and liver and kidney function. The selection of specific tests will be influenced by observations on the mode of action of the substance and signs of clinical toxicity.

(B) The recommended clinical chemistry determinations are potassium, sodium, glucose, total cholesterol, urea nitrogen, creatinine, total protein, and albumin. More than two hepatic enzymes, (such as alanine aminotransferase, aspartate aminotransferase, alkaline phosphatase, sorbitol dehydrogenase, or gamma glutamyl transpeptidase) should also be measured. Measurements of addtional enzymes (of hepatic or other origin) and bile acids, may also be useful.

(iii) If a test chemical has an effect on the hematopoietic system, reticulocyte counts and bone marrow cytology may be indicated.

(iv) Other determinations that should be carried out if the test chemical is known or suspected of affecting related measures include calcium, phosphorus, fasting triglycerides, hormones, methemoglobin, and cholinesterases.

(v) *Urinalyses.* Urinalysis for rodents must be performed at the end of the first year of the study using timed urine collection. Urinalysis determinations include: appearance, volume, osmolality or specific gravity, pH, protein, glucose, and blood/blood cells.

(9) *Ophthalmological examination*. Examinations must be made on all animals using an ophthalmoscope or an equivalent device prior to the administration of the test substance and at termination of the study on 10 animals per sex in the high-dose and control groups. If changes in eyes are detected, all animals must be examined.

(10) *Gross necropsy*. (i) A complete gross examination must be performed on all animals, including those which died during the experiment or were sacrificed in a moribund condition.

(ii) At least, the liver, kidneys, adrenals, testes, epididymides, ovaries, uterus, spleen, brain, and heart should be trimmed and weighed wet, as soon as possible after dissection to avoid drying. The lungs should be weighed if the test substance is administered by the inhalation route. The organs should be weighed from interim sacrifice animals as well as from at least 10 animals per sex per group at terminal sacrifice.

(iii) The following organs and tissues, or representative samples thereof, must be preserved in a suitable medium for possible future histopathological examination:

(A) Digestive system—salivary glands, esophagus, stomach, duodenum, jejunum, ileum, cecum, colon, rectum, liver, pancreas, gallbladder (when present) .

(B) Nervous system—brain (multiple sections, including cerebrum, cerebellum and medulla/pons), pituitary, peripheral nerve (sciatic or tibial, preferably in close proximity to the muscle), spinal cord (three levels, cervical, mid-thoracic, and lumbar), eyes (retina, optic nerve).

(C) Glandular system—adrenals, parathyroid, thyroid.

(D) Respiratory system—trachea, lungs, pharynx, larynx, nose.

(E) Cardiovascular/Hematopoietic system—aorta, heart, bone marrow (and/or fresh aspirate), lymph nodes (preferably one lymph node covering the route of administration and another one distant from the route of administration to cover systemic effects), spleen.

(F) Urogenital system—kidneys, urinary bladder, prostate, testes, epididymides, seminal vesicle(s), uterus, ovaries, female mammary gland.

(G) Other—all gross lesions and masses, skin.

(iv) In inhalation studies, the entire respiratory tract, including nose, pharynx, larynx, and paranasal sinuses should be examined and preserved. In dermal studies, skin from treated and adjacent control skin sites should be examined and preserved.

(v) Inflation of lungs and urinary bladder with a fixative is the optimal method for preservation of these tissues. The proper inflation and fixation of the lungs in inhalation studies is essential for appropriate and valid histopathological examination.

(vi) Information from clinical pathology and other in-life data should be considered before microscopic examination, since these data may provide significant guidance to the pathologist.

(11) [Reserved]

(12) *Histopathology*. (i) The following histopathology must be performed:

(A) Full histopathology on the organs and tissues, listed in paragraph (e)(10)(iii) of this section of all animals in the control and high dose groups and of all animals that died or were sacrificed during the study.

(B) All gross lesions in all animals.

(C) Target organs in all animals.

(ii) If the results show substantial alteration of the animal's normal life span, the induction of effects that might affect a neoplastic response, or other effects that might compromise the significance of the data, the next lower levels should be examined fully as described in paragraph (e)(12)(i) of this section.

(iii) An attempt should be made to correlate gross observations with microscopic findings.

(iv) Tissues and organs designated for microscopic examination should be fixed in 10% buffered formalin or a recognized suitable fixative as soon as necropsy is performed and no less than 48 hours prior to trimming.

(f) *Data and reporting*—(1) *Treatment of results.* (i) Data must be summarized in tabular form, showing for each test group the number of animals at the start of the test, the number of animals showing lesions, the types of lesions and the percentage of animals displaying each type of lesion.

(ii) When applicable, all observed results, quantitative and qualitative, must be evaluated by an appropriate statistical method. Any generally accepted statistical methods may be used; the statistical methods including significance criteria should be selected during the design of the study.

(2) *Evaluation of study results.* (i) The findings of a combined chronic toxicity/carcinogenicity study should be evaluated in conjunction with the findings of previous studies and considered in terms of the toxic effects, the necropsy and histopathological findings. The evaluation must include the relationship between the dose of the test substance and the presence, incidence and severity of abnormalities (including behavioral and clinical abnormalities), gross lesions, identified target organs, body weight changes, effects on mortality and any other general or specific toxic effects.

(ii) In any study which demonstrates an absence of toxic effects, further investigation to establish absorption and bioavailablity of the test substance should be considered.

(iii) In order for a negative test to be acceptable, it should meet the following criteria—no more than 10% of any group is lost due to autolysis, cannibalism, or management problems, and survival in each group is no less than 50% at 15 months for mice and 18

months for rats. Survival should not fall below 25% at 18 months for mice and 24 months for rats.

(iv) The use of historical control data from an appropriate time period from the same testing laboratory (i.e, the incidence of tumors and other suspect lesions normally occurring under the same laboratory conditions and in the same strain of animals employed in the test) is helpful for assessing the significance of changes observed in the current study.

(3) *Test report.* (i) In addition to the reporting requirements specified under EPA Good Laboratory Practice Standards at 40 CFR part 792, subpart J, the following specific information must be reported:

(A) Test substance characterization should include:

(*1*) Chemical identification.

(*2*) Lot or batch number.

(*3*) Physical properties.

(*4*) Purity/impurities.

(*5*) Identification and composition of any vehicle used.

(B) Test system should contain data on:

(*1*) Species and strain of animals used and rationale for selection if other than that recommended.

(*2*) Age including body weight data and sex.

(*3*) Test environment including cage conditions, ambient temperature, humidity, and light/dark periods.

(*4*) Identification of animal diet.

(*5*) Acclimation period.

(C) Test procedure should include the following data:

(*1*) Method of randomization used.

(*2*) Full description of experimental design and procedure.

(*3*) Dose regimen including levels, methods, and volume.

(4) *Test results.* (i) Group animal data. Tabulation of toxic response data by species, strain, sex, and exposure level for:

(A) Number of animals exposed.

(B) Number of animals showing signs of toxicity.

(C) Number of animals dying.

(ii) Individual animal data. Data should be presented as summary (group mean) as well as for individual animals.

(A) Time of death during the study or whether animals survived to termination.

(B) Time of observation of each abnormal sign and its subsequent course.

(C) Body weight data.

(D) Feed and water consumption data, when collected.

(E) Achieved dose (milligrams/kilogram body weight) as a time-weighed average is the test substance is administered in the diet or drinking water.

(F) Results of ophthalmological examination, when performed.

(G) Results of hematological tests performed.

(H) Results of clinical chemistry tests performed.

(I) Results of urinalysis tests performed.

(J) Results of observations made.

(K) Necropsy findings including absolute/relative organ weight data.

(L) Detailed description of all histopathological findings.

(M) Statistical treatment of results where appropriate.

(N) Historical control data.

(iii) In addition, for inhalation studies the following should be reported:

(A) Test conditions. The following exposure conditions must be reported.

(*1*) Description of exposure apparatus including design, type, dimensions, source of air, system for generating particulates and aerosols, method of conditioning air, treatment of exhaust air and the method of housing the animals in a test chamber.

(*2*) The equipment for measuring temperature, humidity, and particulate aerosol concentrations and size should be described.

(B) Exposure data. These must be tabulated and presented with mean values and a measure of variability (e.g., standard deviation) and should include:

(*1*) Airflow rates through the inhalation equipment.

(*2*) Temperature and humidity of air.

(*3*) Actual (analytical or gravimetric) concentration in the breathing zone.

(*4*) Nominal concentration (total amount of test substance fed into the inhalation equipment divided by volume of air).

(*5*) Particle size distribution, and calculated MMAD and geometric standard deviation.

(6) Explanation as to why the desired chamber concentration and/or particle size could not be achieved (if applicable) and the efforts taken to comply with this aspect of the guidelines.

(g) *Quality control.* A system must be developed and maintained to assure and document adequate performance of laboratory equipment. The study must be conducted in compliance with 40 CFR Part 792—Good Laborary Practice Standards.

(h) *References.* For additional background information on this test guideline, the following references should be consulted. These references are available for inspection at the TSCA Nonconfidential Information Center, Rm. NE–B607, Environmental Protection Agency, 401 M St., NW., Washington, DC, 12 noon to 4 p.m., Monday through Friday, except legal holidays.

(1) Benitz, K.F. *Measurement of Chronic Toxicity*. Methods of Toxicology. Ed. G.E. Paget. Blackwell, Oxford. pp. 82–131 (1970).

(2) Crofton K.M., Howard J.L., Moser V.C., Gill M.W., Leiter L.W., Tilson H.A., MacPhail, R.C. Interlaboratory Comparison of Motor Activity Experiments: Implication for Neurotoxicological Assessments. Neurotoxicol. Teratol. 13, 599–609. (1991)

(3) D'Aguanno, W. *Drug Safety Evaluation—Pre-Clinical Considerations. Industrial Pharmacology: Neuroleptic.* Vol. I, Ed. S. Fielding and H. Lal. Futura, Mt. Kisco, NY. pp. 317–332 (1974).

(4) Fitzhugh, O.G. *Chronic Oral Toxicity, Appraisal of the Safety of Chemicals in Foods, Drugs and Cosmetics.* The Association of Food and Drug Officials of the United States. pp. 36–45 (1959, 3rd Printing 1975).

(5) Goldenthal, E.I. and D'Aguanno, W. *Evaluation of Drugs, Appraisal of the Safety of Chemicals in Foods, Drugs, and Cosmetics.* The Association of Food and Drug Officials of the United States. pp. 60–67 (1959, 3rd Printing 1975).

(6) Organization for Economic Cooperation and Development. Guidelines for Testing of Chemicals, Section 4-Health Effects, Part 453 Combined Chronic Toxicity/Carcinogenicity Studies, Paris. (1981).

(7) Page, N.P. Chronic Toxicity and Carcinogenicity Guidelines. *Journal of Environmental Pathology and Toxicology* 11:161–182 (1977).

(8) Page, N.P. Concepts of a Bioassay Program in Environmental Carcinogenesis, Advances in Modern Toxicology. Vol.3, Ed. Kraybill and Mehlman. Hemisphere, Washington, DC pp. 87–171 (1977)

(9) Sontag, J.M. et al. Guidelines for Carcinogen Bioassay in Small Rodents. NCI-CS-TR-1 (Bethesda: United States Cancer Institute, Division of Cancer Control and Prevention, Carcinogenesis Bioassay Program.

(10) Summary of the EPA Workshop on Carcinogenesis Bioassay via the Dermal Route. EPA Report 50/6–89–002; 50/6–89–003. Washington, DC.

(11) The Atlas Of Dermal Lesions, EPA Report 20T–004, U.S Environmental Protection Agency, Washington, DC.

[65 FR 78802, Dec. 15, 2000]

§ 799.9510 TSCA bacterial reverse mutation test.

(a) *Scope.* This section is intended to meet the testing requirements under section 4 of TSCA.

(1) The bacterial reverse mutation test uses amino-acid requiring strains of *Salmonella typhimurium* and *Escherichia coli* to detect point mutations, which involve substitution, addition or deletion of one or a few DNA base pairs. The principle of this bacterial reverse mutation test is that it detects mutations which revert mutations present in the test strains and restore the functional capability of the bacteria to synthesize an essential amino acid. The revertant bacteria are detected by their ability to grow in the absence of the amino acid required by the parent test strain.

(2) Point mutations are the cause of many human genetic diseases and there is substantial evidence that point mutations in oncogenes and tumor suppressor genes of somatic cells are involved in tumor formation in humans and experimental animals. The bacterial reverse mutation test is rapid, inexpensive and relatively easy to perform. Many of the test strains have several features that make them more sensitive for the detection of mutations, including responsive DNA sequences at the reversion sites, increased cell permeability to large molecules and elimination of DNA repair systems or enhancement of error-prone DNA repair processes. The specificity of the test strains can provide some useful information on the types of mutations that are induced by genotoxic agents. A very large data base of results for a wide variety of

structures is available for bacterial reverse mutation tests and well-established methodologies have been developed for testing chemicals with different physico-chemical properties, including volatile compounds.

(b) *Source.* The source material used in developing this TSCA test guideline are the OECD replacement guidelines for 471 and 472 (February 1997). This source is available at the address in paragraph (g) of this section.

(c) *Definitions.* The following definitions apply to this section:

A reverse mutation test in either *Salmonella typhimurium* or *Escherichia coli* detects mutation in an amino-acid requiring strain (histidine or tryptophan, respectively) to produce a strain independent of an outside supply of amino-acid.

Base pair substitution mutagens are agents that cause a base change in DNA. In a reversion test this change may occur at the site of the original mutation, or at a second site in the bacterial genome.

Frameshift mutagens are agents that cause the addition or deletion of one or more base pairs in the DNA, thus changing the reading frame in the RNA

(d) *Initial considerations.* (1) The bacterial reverse mutation test utilizes prokaryotic cells, which differ from mammalian cells in such factors as uptake, metabolism, chromosome structure and DNA repair processes. Tests conducted *in vitro* generally require the use of an exogenous source of metabolic activation. *In vitro* metabolic activation systems cannot mimic entirely the mammalian *in vivo* conditions. The test therefore does not provide direct information on the mutagenic and carcinogenic potency of a substance in mammals.

(2) The bacterial reverse mutation test is commonly employed as an initial screen for genotoxic activity and, in particular, for point mutation-inducing activity. An extensive data base has demonstrated that many chemicals that are positive in this test also exhibit mutagenic activity in other tests. There are examples of mutagenic agents which are not detected by this test; reasons for these shortcomings can be ascribed to the specific nature of the endpoint detected, differences in metabolic activation, or differences in bioavailability. On the other hand, factors which enhance the sensitivity of the bacterial reverse mutation test can lead to an overestimation of mutagenic activity.

(3) The bacterial reverse mutation test may not be appropriate for the evaluation of certain classes of chemicals, for example highly bactericidal compounds (e.g. certain antibiotics) and those which are thought (or known) to interfere specifically with the mammalian cell replication system (e.g. some topoisomerase inhibitors and some nucleoside analogues). In such cases, mammalian mutation tests may be more appropriate.

(4) Although many compounds that are positive in this test are mammalian carcinogens, the correlation is not absolute. It is dependent on chemical class and there are carcinogens that are not detected by this test because they act through other, non-genotoxic mechanisms or mechanisms absent in bacterial cells.

(e) *Test method*—(1) *Principle.* (i) Suspensions of bacterial cells are exposed to the test substance in the presence and in the absence of an exogenous metabolic activation system. In the plate incorporation method, these suspensions are mixed with an overlay agar and plated immediately onto minimal medium. In the preincubation method, the treatment mixture is incubated and then mixed with an overlay agar before plating onto minimal medium. For both techniques, after 2 or 3 days of incubation, revertant colonies are counted and compared to the number of spontaneous revertant colonies on solvent control plates.

(ii) Several procedures for performing the bacterial reverse mutation test have been described. Among those commonly used are the plate incorporation method, the preincubation method, the fluctuation method, and the suspension method. Suggestions for modifications for the testing of gases or vapors are described in the reference in paragraph (g)(12) of this section.

(iii) The procedures described in this section pertain primarily to the plate incorporation and preincubation methods. Either of them is acceptable for conducting experiments both with and

without metabolic activation. Some compounds may be detected more efficiently using the preincubation method. These compounds belong to chemical classes that include short chain aliphatic nitrosamines, divalent metals, aldehydes, azo-dyes and diazo compounds, pyrollizidine alkaloids, allyl compounds and nitro compounds. It is also recognized that certain classes of mutagens are not always detected using standard procedures such as the plate incorporation method or preincubation method. These should be regarded as ''special cases'' and it is strongly recommended that alternative procedures should be used for their detection. The following ''special cases'' could be identified (together with examples of procedures that could be used for their detection): azo-dyes and diazo compounds (alterative procedures are described in the references in paragraphs (g)(3), (g)(5), (g)(6), and (g)(13) of this section), gases and volatile chemicals (alterative procedures are described in the references in paragraphs (g)(12), (g)(14), (g)(15), and (g)(16) of this section), and glycosides (alterative procedures are described in the references in paragraphs (g)(17) and (g)(18) of this section). A deviation from the standard procedure needs to be scientifically justified.

(2) *Description*—(i) *Preparations*—(A) *Bacteria.* (*1*) Fresh cultures of bacteria should be grown up to the late exponential or early stationary phase of growth (approximately 10^9 cells per ml). Cultures in late stationary phase should not be used. The cultures used in the experiment shall contain a high titre of viable bacteria. The titre may be demonstrated either from historical control data on growth curves, or in each assay through the determination of viable cell numbers by a plating experiment.

(*2*) The culture temperature shall be 37 °C.

(*3*) At least five strains of bacteria should be used. These should include four strains of *S. typhimurium* (TA1535; TA1537 or TA97a or TA97; TA98; and TA100) that have been shown to be reliable and reproducibly responsive between laboratories. These four *S. typhimurium* strains have GC base pairs at the primary reversion site and it is known that they may not detect certain oxidizing mutagens, cross-linking agents, and hydrazines. Such substances may be detected by E. coli WP2 strains or *S. typhimurium* TA102 (see reference in paragraph (g)(19) of this section) which have an AT base pair at the primary reversion site. Therefore the recommended combination of strains is:

(*i*) *S. typhimurium* TA1535.

(*ii*) *S. typhimurium* TA1537 or TA97 or TA97a.

(*iii*) *S. typhimurium* TA98.

(*iv*) *S. typhimurium* TA100.

(*v*) *E. coli* WP2 *uvrA*, or *E. coli* WP2 *uvrA* (pKM101), or *S. typhimurium* TA102. In order to detect cross-linking mutagens it may be preferable to include TA102 or to add a DNA repair-proficient strain of *E.coli* [e.g. *E.coli* WP2 or *E.coli* WP2 (pKM101).]

(*4*) Established procedures for stock culture preparation, marker verification and storage should be used. The amino-acid requirement for growth should be demonstrated for each frozen stock culture preparation (histidine for *S. typhimurium* strains, and tryptophan for *E. coli* strains). Other phenotypic characteristics should be similarly checked, namely: the presence or absence of R-factor plasmids where appropriate [i.e. ampicillin resistance in strains TA98, TA100 and TA97a or TA97, WP2 *uvrA* and WP2 *uvrA* (pKM101), and ampicillin = tetracycline resistance in strain TA102]; the presence of characteristic mutations (i.e. rfa mutation in *S. typhimurium* through sensitivity to crystal violet, and *uvrA* mutation in *E. coli* or *uvrB* mutation in *S. typhimurium*, through sensitivity to ultra-violet light). The strains should also yield spontaneous revertant colony plate counts within the frequency ranges expected from the laboratory's historical control data and preferably within the range reported in the literature.

(B) *Medium.* An appropriate minimal agar (e.g. containing Vogel-Bonner minimal medium E and glucose) and an overlay agar containing histidine and biotin or tryptophan, to allow for a few cell divisions, shall be used. The procedures described in the references under paragraphs (g)(1), (g)(2), and (g)(9) of

this section may be used for this analysis.

(C) *Metabolic activation.* Bacteria shall be exposed to the test substance both in the presence and absence of an appropriate metabolic activation system. The most commonly used system is a cofactor-supplemented post-mitochondrial fraction (S9) prepared from the livers of rodents treated with enzyme-inducing agents such as Aroclor 1254 (the system described in the references under paragraphs (g)(1) and (g)(2) of this section may be used) or a combination of phenobarbitone and β-naphthoflavone (the system described in the references under paragraphs (g)(18), (g)(20), and (g)(21) of this section may be used). The post-mitochondrial fraction is usually used at concentrations in the range from 5 to 30% v/v in the S9-mix. The choice and condition of a metabolic activation system may depend upon the class of chemical being tested. In some cases it may be appropriate to utilize more than one concentration of post-mitochondrial fraction. For azo-dyes and diazo-compounds, using a reductive metabolic activation system may be more appropriate (the system described in the references under paragraphs (g)(6) and (g)(13) of this section may be used).

(D) *Test substance/preparation.* Solid test substances should be dissolved or suspended in appropriate solvents or vehicles and diluted if appropriate prior to treatment of the bacteria. Liquid test substances may be added directly to the test systems and/or diluted prior to treatment. Fresh preparations should be employed unless stability data demonstrate the acceptability of storage.

(ii) *Test conditions*—(A) *Solvent/vehicle.* The solvent/vehicle should not be suspected of chemical reaction with the test substance and shall be compatible with the survival of the bacteria and the S9 activity (for further information see the reference in paragraph (g)(22) of this section). If other than well-known solvent/vehicles are used, their inclusion should be supported by data indicating their compatibility. It is recommended that wherever possible, the use of an aqueous solvent/vehicle be considered first. When testing water-unstable substances, the organic solvents used be free of water.

(B) *Exposure concentrations.* (*1*) Amongst the criteria to be taken into consideration when determining the highest amount of test substance to be used are cytotoxicity and solubility in the final treatment mixture. It may be useful to determine toxicity and insolubility in a preliminary experiment. Cytotoxicity may be detected by a reduction in the number of revertant colonies, a clearing or diminution of the background lawn, or the degree of survival of treated cultures. The cytotoxicity of a substance may be altered in the presence of metabolic activation systems. Insolubility should be assessed as precipitation in the final mixture under the actual test conditions and evident to the unaided eye. The recommended maximum test concentration for soluble non-cytotoxic substances is 5 mg/plate or 5 µl/plate. For non-cytotoxic substances that are not soluble at 5mg/plate or 5µl/plate, one or more concentrations tested should be insoluble in the final treatment mixture. Test substances that are cytotoxic already below 5mg/plate or 5µl/plate should be tested up to a cytotoxic concentration. The precipitate should not interfere with the scoring.

(*2*) At least five different analyzable concentrations of the test substance shall be used with approximately half log (i.e. $\sqrt{10}$) intervals between test points for an initial experiment. Smaller intervals may be appropriate when a concentration-response is being investigated.

(*3*) Testing above the concentration of 5 mg/plate or 5µl/plate may be considered when evaluating substances containing substantial amounts of potentially mutagenic impurities.

(C) *Controls.* (*1*) Concurrent strain-specific positive and negative (solvent or vehicle) controls, both with and without metabolic activation, shall be included in each assay. Positive control concentrations that demonstrate the effective performance of each assay should be selected.

(*2*)(*i*) For assays employing a metabolic activation system, the positive control reference substance(s) should be selected on the basis of the type of

bacteria strains used. The following chemicals are examples of suitable positive controls for assays with metabolic activation:

Chemical	CAS No.
9,10-Dimethylanthracene	[CAS no. 781–43–1]
7,12-Dimethylbenzanthracene	[CAS no. 57–97–6]
Congo Red (for the reductive metabolic activation method).	[CAS no. 573–58–0]
Benzo(a)pyrene	[CAS no. 50–32–8]
Cyclophosphamide (monohydrate)	[CAS no. 50–18–0]
	[CAS no. 6055–19–2]
2-Aminoanthracene	[CAS no. 613–13–8]

(*ii*) 2-Aminoanthracene should not be used as the sole indicator of the efficacy of the S9-mix. If 2-aminoanthracene is used, each batch of S9 should also be characterized with a mutagen that requires metabolic activation by microsomal enzymes, e.g., benzo(a)pyrene, dimethylbenzanthracene.

(*3*) For assays performed without metabolic activation system, examples of strain-specific positive controls are:

Chemical	CAS No.	Strain
(a) Sodium azide	[CAS no. 26628–22–8]	TA1535 and TA100
(b) 2-Nitrofluorene	[CAS no. 607–57–8]	TA 98
(c) 9-Aminoacridine or ICR 191	[CAS no. 90–45–9] or	TA1537, TA97 and TA97a
	[CAS no. 17070–45–0]	
(d) Cumene hydroperoxide	[CAS no. 80–15–9]	TA102
(e) Mitomycin C	[CAS no. 50–07–7]	WP2 *uvrA* and TA102
(f) N-Ethyl-N-nitro-N-nitrosoguanidine or	[CAS no. 70–25–7] or	WP2, WP2 *uvrA* and WP2 *uvrA*
4-nitroquinoline 1-oxide	[CAS no. 56–57–5]	(pKM101)
(g) Furylfuramide (AF-2)	[CAS no. 3688–53–7]	Plasmid-containing strains

(*4*) Other appropriate positive control reference substances may be used. The use of chemical class-related positive control chemicals may be considered, when available.

(*5*) Negative controls, consisting of solvent or vehicle alone, without test substance, and otherwise treated in the same way as the treatment groups, shall be included. In addition, untreated controls should also be used unless there are historical control data demonstrating that no deleterious or mutagenic effects are induced by the chosen solvent.

(3) *Procedure*—(i) *Treatment with test substance.* (A) For the plate incorporation method, without metabolic activation, usually 0.05 ml or 0.1 ml of the test solutions, 0.1 ml of fresh bacterial culture (containing approximately 10^8 viable cells) and 0.5 ml of sterile buffer are mixed with 2.0 ml of overlay agar. For the assay with metabolic activation, usually 0.5 ml of metabolic activation mixture containing an adequate amount of post-mitochondrial fraction (in the range from 5 to 30% v/v in the metabolic activation mixture) are mixed with the overlay agar (2.0 ml), together with the bacteria and test substance/test solution. The contents of each tube are mixed and poured over the surface of a minimal agar plate. The overlay agar is allowed to solidify before incubation.

(B) For the preincubation method the test substance/test solution is preincubated with the test strain (containing approximately 10^8 viable cells) and sterile buffer or the metabolic activation system (0.5 ml) usually for 20 min. or more at 30–37 °C prior to mixing with the overlay agar and pouring onto the surface of a minimal agar plate. Usually, 0.05 or 0.1 ml of test substance/test solution, 0.1 ml of bacteria, and 0.5 ml of S9-mix or sterile buffer, are mixed with 2.0 ml of overlay agar. Tubes should be aerated during pre-incubation by using a shaker.

(C) For an adequate estimate of variation, triplicate plating should be used at each dose level. The use of duplicate plating is acceptable when scientifically justified. The occasional loss of a plate does not necessarily invalidate the assay.

(D) Gaseous or volatile substances should be tested by appropriate methods, such as in sealed vessels (methods described in the references under paragraphs (g)(12), (g)(14), (g)(15), and (g)(16) of this section may be used).

(ii) *Incubation.* All plates in a given assay shall be incubated at 37 °C for 48–72 hrs. After the incubation period, the

number of revertant colonies per plate is counted.

(f) *Data and reporting*—(1) *Treatment of results.* (i) Data shall be presented as the number of revertant colonies per plate. The number of revertant colonies on both negative (solvent control, and untreated control if used) and positive control plates shall also be given.

(ii) Individual plate counts, the mean number of revertant colonies per plate and the standard deviation shall be presented for the test substance and positive and negative (untreated and/or solvent) controls.

(iii) There is no requirement for verification of a clear positive response. Equivocal results shall be clarified by further testing preferably using a modification of experimental conditions. Negative results need to be confirmed on a case-by-case basis. In those cases where confirmation of negative results is not considered necessary, justification should be provided. Modification of study parameters to extend the range of conditions assessed should be considered in follow-up experiments. Study parameters that might be modified include the concentration spacing, the method of treatment (plate incorporation or liquid preincubation), and metabolic activation conditions.

(2) *Evaluation and interpretation of results.* (i) There are several criteria for determining a positive result, such as a concentration-related increase over the range tested and/or a reproducible increase at one or more concentrations in the number of revertant colonies per plate in at least one strain with or without metabolic activation system. Biological relevance of the results should be considered first. Statistical methods may be used as an aid in evaluating the test results. However, statistical significance should not be the only determining factor for a positive response.

(ii) A test substance for which the results do not meet the criteria described under paragraph (f)(2)(i) of this section is considered non-mutagenic in this test

(iii) Although most experiments will give clearly positive or negative results, in rare cases the data set will preclude making a definite judgement about the activity of the test substance. Results may remain equivocal or questionable regardless of the number of times the experiment is repeated.

(iv) Positive results from the bacterial reverse mutation test indicate that a substance induces point mutations by base substitutions or frameshifts in the genome of either *Salmonella typhimurium* and/or *Escherichia coli*. Negative results indicate that under the test conditions, the test substance is not mutagenic in the tested species.

(3) *Test report.* The test report shall include the following information:

(i) Test substance:

(A) Identification data and CAS no., if known.

(B) Physical nature and purity.

(C) Physicochemical properties relevant to the conduct of the study.

(D) Stability of the test substance, if known.

(ii) Solvent/vehicle:

(A) Justification for choice of solvent/vehicle.

(B) Solubility and stability of the test substance in solvent/vehicle, if known.

(iii) Strains:

(A) Strains used.

(B) Number of cells per culture.

(C) Strain characteristics.

(iv) Test conditions:

(A) Amount of test substance per plate (mg/plate or ml/plate) with rationale for selection of dose and number of plates per concentration.

(B) Media used.

(C) Type and composition of metabolic activation system, including acceptability criteria.

(D) Treatment procedures.

(v) Results:

(A) Signs of toxicity.

(B) Signs of precipitation.

(C) Individual plate counts.

(D) The mean number of revertant colonies per plate and standard deviation.

(E) Dose-response relationship, where possible.

(F) Statistical analyses, if any.

(G) Concurrent negative (solvent/vehicle) and positive control data, with ranges, means and standard deviations.

(H) Historical negative (solvent/vehicle) and positive control data, with e.g. ranges, means and standard deviations.

(vi) Discussion of the results.

(vii) Conclusion.

(g) *References.* For additional background information on this test guideline, the following references should be consulted. These references are available for inspection at the TSCA Nonconfidential Information Center, Rm. NE–B607, Environmental Protection Agency, 401 M St., SW., Washington, DC, 12 noon to 4 p.m., Monday through Friday, except legal holidays.

(1) Ames, B.N., McCann, J., and Yamasaki, E. Methods for Detecting Carcinogens and Mutagens With the Salmonella/Mammalian-Microsome Mutagenicity Test. *Mutation Research*. 31, 347–364 (1975).

(2) Maron, D.M. and Ames, B.N. Revised Methods for the Salmonella Mutagenicity Test. *Mutation Research*. 113, 173–215 (1983).

(3) Gatehouse, D., Haworth, S., Cebula, T., Gocke, E., Kier, L., Matsushima, T., Melcion, C., Nohmi, T., Venitt, S., and Zeiger, E. Recommendations for the Performance of Bacterial Mutation Assays. *Mutation Research*. 312, 217–233 (1994).

(4) Kier, L.D., Brusick, D.J., Auletta, A.E., Von Halle, E.S., Brown, M.M., Simmon, V.F., Dunkel, V., McCann, J., Mortelmans, K., Prival, M., Rao, T.K., and Ray V. The Salmonella Typhimurium/Mammalian Microsomal Assay: A Report of the U.S. Environmental Protection Agency Gene-Tox Program. *Mutation Research*. 168, 69–240 (1986).

(5) Yahagi, T., Degawa, M., Seino, Y.Y., Matsushima, T., Nagao, M., Sugimura, T., and Hashimoto, Y. Mutagenicity of Carcinogen Azo Dyes and Their Derivatives. *Cancer Letters*, 1. 91–96 (1975).

(6) Matsushima, M., Sugimura, T., Nagao, M., Yahagi, T., Shirai, A., and Sawamura, M. Factors Modulating Mutagenicity Microbial Tests. Eds. Norpoth, K.H. and Garner, R.C. *Short-Term Test Systems for Detecting Carcinogens* (Springer, Berlin-Heidelberg-New York, 1980) pp. 273–285.

(7) Gatehouse, D.G., Rowland, I.R., Wilcox, P., Callender, R.D., and Foster, R. Bacterial Mutation Assays. Ed. Kirkland, D.J. *Basic Mutagenicity Tests.* UKEMS Part 1 Revised (Cambridge University Press, 1990) pp. 13–61.

(8) Aeschbacher, H.U., Wolleb, U., and Porchet, L.J. Liquid Preincubation Mutagenicity Test for Foods. *Food Safety*. 8, 167–177 (1987).

(9) Green, M.H.L., Muriel, W.J., and Bridges, B.A. Use of a Simplified Fluctuation Test to Detect Low Levels of Mutagens. *Mutation Research*. 38, 33–42 (1976).

(10) Hubbard, S.A., Green, M.H.L., Gatehouse, D., and J.W. Bridges. The Fluctuation Test in Bacteria. 2nd Edition. Ed. Kilbey, B.J., Legator, M., Nichols, W., and Ramel C. *Handbook of Mutagenicity Test Procedures* (Elsevier, Amsterdam-New York-Oxford, 1984) pp. 141–161.

(11) Thompson, E.D. and Melampy, P.J. An Examination of the Quantitative Suspension Assay for Mutagenesis With Strains of Salmonella Typhimurium. *Environmental Mutagenesis.* 3, 453–465 (1981).

(12) Araki, A., Noguchi, T., Kato, F., and T. Matsushima. Improved Method for Mutagenicity Testing of Gaseous Compounds by Using a Gas Sampling Bag. *Mutation Research*. 307, 335–344 (1994).

(13) Prival, M.J., Bell, S.J., Mitchell, V.D., Reipert, M.D., and Vaughn, V.L. Mutagenicity of Benzidine and Benzidine-Congener Dyes and Selected Monoazo Dyes in a Modified Salmonella Assay. *Mutation Research*. 136, 33–47 (1984).

(14) Zeiger, E., Anderson, B. E., Haworth, S, Lawlor, T., and Mortelmans, K. Salmonella Mutagenicity Tests. V. Results from the Testing of 311 Chemicals. Environ. Mol. *Mutagen*. 19, 2–141 (1992).

(15) Simmon, V., Kauhanen, K., and Tardiff, R.G. Mutagenic Activity of Chemicals Identified in Drinking Water. Ed. Scott, D., Bridges, B., and Sobels, F. *Progress in Genetic Toxicology* (Elsevier, Amsterdam, 1977) pp. 249–258.

(16) Hughes, T.J., Simmons, D.M., Monteith, I.G., and Claxton, L.D. Vaporization Technique to Measure Mutagenic Activity of Volatile Organic Chemicals in the Ames/Salmonella Assay. *Environmental Mutagenesis.* 9, 421–441 (1987).

(17) Matsushima, T., Matsumoto, A., Shirai, M., Sawamura, M., and Sugimura, T. Mutagenicity of the Naturally Occurring Carcinogen Cycasin and Synthetic Methylazoxy Methane Conjugates in Salmonella Typhimurium. *Cancer Research*. 39, 3780–3782 (1979).

(18) Tamura, G., Gold, C., Ferro-Luzzi, A., and Ames. B.N. Fecalase: A Model for Activation of Dietary Glycosides to Mutagens by Intestinal Flora. Proc. National Academy of Science. (USA, 1980) 77, 4961–4965.

(19) Wilcox, P., Naidoo, A., Wedd, D. J., and Gatehouse, D. G. Comparison of Salmonella Typhimurium TA 102 With Escherichia Coli WP2 Tester Strains. *Mutagenesis.* 5, 285–291 (1990).

(20) Matsushima, T., Sawamura, M., Hara, K., and Sugimura, T. A Safe Substitute for Polychlorinated Biphenyls as an Inducer of Metabolic Activation Systems. Ed. F.J. de Serres *et al. In Vitro Metabolic Activation in Mutagenesis Testing*. (Elsevier, North Holland, 1976) pp. 85–88.

(21) Elliott, B.M., Combes, R.D., Elcombe, C.R., Gatehouse, D.G., Gibson, G.G., Mackay, J.M., and Wolf, R.C. Alternatives to Aroclor 1254-Induced S9 in *In Vitro* Genotoxicity Assays. *Mutagenesis.* 7, 175–177 (1992).

(22) Maron, D., Katzenellenbogen, J., and Ames, B.N. Compatibility of Organic Solvents With the Salmonella/Microsome Test. *Mutation Research*. 88, 343–350 (1981).

(23) Claxton, L.D., Allen, J., Auletta, A., Mortelmans, K., Nestmann, E., and Zeiger, E. Guide for the Salmonella Typhimurium/Mammalian Microsome Tests for Bacterial Mutagenicity. *Mutation Research*. 189, 83–91 (1987).

(24) Mahon, G.A.T., Green, M.H.L., Middleton, B., Mitchell, I., Robinson, W.D., and Tweats, D.J. Analysis of Data from Microbial Colony Assays. UKEMS Sub-Committee on Guidelines for Mutagenicity Testing Part II. Ed. Kirkland, D.J. *Statistical Evaluation of Mutagenicity Test Data* (Cambridge University Press, 1989) pp. 28–65.

[62 FR 43824, Aug. 15, 1997, as amended at 64 FR 35079, June 30, 1999]

§ 799.9530 TSCA in vitro mammalian cell gene mutation test.

(a) *Scope.* This section is intended to meet the testing requirements under section 4 of TSCA. The *in vitro* mammalian cell gene mutation test can be used to detect gene mutations induced by chemical substances. Suitable cell lines include L5178Y mouse lymphoma cells, the CHO, AS52 and V79 lines of Chinese hamster cells, and TK6 human lymphoblastoid cells under paragraph (g)(1) of this section. In these cell lines the most commonly-used genetic endpoints measure mutation at thymidine kinase (TK) and hypoxanthine-guanine phosphoribosyl transferase (HPRT), and a transgene of xanthine-guanine phosphoribosyl transferase (XPRT). The TK, HPRT and XPRT mutation tests detect different spectra of genetic events. The autosomal location of TK and XPRT may allow the detection of genetic events (e.g. large deletions) not detected at the HPRT locus on X-chromosomes (For a discussion see the references in paragraphs (g)(2), (g)(3), (g)(4),(g)(5), and (g)(6) of this section).

(b) *Source.* The source material used in developing this TSCA test guideline is the OECD guideline 476 (February 1997). This source is available at the address in paragraph (g) of this section.

(c) *Definitions.* The following definitions apply to this section:

Base pair substitution mutagens are substances which cause substitution of one or several base pairs in the DNA.

Forward mutation is a gene mutation from the parental type to the mutant form which gives rise to an alteration or a loss of the enzymatic activity or the function of the encoded protein.

Frameshift mutagens are substances which cause the addition or deletion of single or multiple base pairs in the DNA molecule.

Mutant frequency is the number of mutant cells observed divided by the number of viable cells.

Phenotypic expression time is a period during which unaltered gene products are depleted from newly mutated cells.

Relative suspension growth is an increase in cell number over the expression period relative to the negative control.

Relative total growth is an increase in cell number over time compared to a control population of cells; calculated as the product of suspension growth relative to the negative control times cloning efficiency relative to negative control.

Survival is the cloning efficiency of the treated cells when plated at the end of the treatment period; survival is usually expressed in relation to the survival of the control cell population.

Viability is the cloning efficiency of the treated cells at the time of plating in selective conditions after the expression period.

(d) *Initial considerations.* (1) In the *in vitro* mammalian cell gene mutation test, cultures of established cell lines or cell strains can be used. The cells used are selected on the basis of growth ability in culture and stability of the spontaneous mutation frequency. Tests conducted *in vitro* generally require the use of an exogenous source of metabolic activation. This metabolic activation system cannot mimic entirely the mammalian *in vivo* conditions. Care should be taken to avoid conditions which would lead to results not reflecting intrinsic mutagenicity. Positive results which do not reflect intrinsic mutagenicity may arise from changes in pH, osmolality or high levels of cytotoxicity.

(2) This test is used to screen for possible mammalian mutagens and carcinogens. Many compounds that are positive in this test are mammalian carcinogens; however, there is not a

perfect correlation between this test and carcinogenicity. Correlation is dependent on chemical class and there is increasing evidence that there are carcinogens that are not detected by this test because they appear to act through other, non-genotoxic mechanisms or mechanisms absent in bacterial cells.

(e) *Test method*—(1) *Principle.* (i) Cells deficient in thymidine kinase (TK) due to the mutation $TK^{=/-}$ -≤ $TK^{-/-}$ are resistant to the cytotoxic effects of the pyrimidine analogue trifluorothymidine (TFT). Thymidine kinase proficient cells are sensitive to TFT, which causes the inhibition of cellular metabolism and halts further cell division. Thus mutant cells are able to proliferate in the presence of TFT, whereas normal cells, which contain thymidine kinase, are not. Similarly, cells deficient in HPRT or XPRT are selected by resistance to 6-thioguanine (TG) or 8-azaguanine (AG). The properties of the test substance should be considered carefully if a base analogue or a compound related to the selective agent is tested in any of the mammalian cell gene mutation tests. For example, any suspected selective toxicity by the test substance for mutant and non-mutant cells should be investigated. Thus, performance of the selection system/agent shall be confirmed when testing chemicals structurally related to the selective agent.

(ii) Cells in suspension or monolayer culture shall be exposed to the test substance, both with and without metabolic activation, for a suitable period of time and subcultured to determine cytotoxicity and to allow phenotypic expression prior to mutant selection. Cytotoxicity is usually determined by measuring the relative cloning efficiency (survival) or relative total growth of the cultures after the treatment period. The treated cultures shall be maintained in growth medium for a sufficient period of time, characteristic of each selected locus and cell type, to allow near-optimal phenotypic expression of induced mutations. Mutant frequency is determined by seeding known numbers of cells in medium containing the selective agent to detect mutant cells, and in medium without selective agent to determine the cloning efficiency (viability). After a suitable incubation time, colonies shall be counted. The mutant frequency is derived from the number of mutant colonies in selective medium and the number of colonies in non-selective medium.

(2) *Description*—(i) *Preparations*—(A) *Cells.* (*1*) A variety of cell types are available for use in this test including subclones of L5178Y, CHO, CHO-AS52, V79, or TK6 cells. Cell types used in this test should have a demonstrated sensitivity to chemical mutagens, a high cloning efficiency and a stable spontaneous mutant frequency. Cells should be checked for mycoplasma contamination and should not be used if contaminated.

(*2*) The test should be designed to have a predetermined sensitivity and power. The number of cells, cultures, and concentrations of test substance used should reflect these defined parameters. The parameters discussed in the reference under paragraph (g)(13) of this section may be used. The minimal number of viable cells surviving treatment and used at each stage in the test should be based on the spontaneous mutation frequency. A general guide is to use a cell number which is at least ten times the inverse of the spontaneous mutation frequency. However, it is recommended to utilize at least 10^6 cells. Adequate historical data on the cell system used should be available to indicate consistent performance of the test.

(B) *Media and culture conditions.* Appropriate culture media and incubation conditions (culture vessels, temperature, CO_2 concentration and humidity) shall be used. Media should be chosen according to the selective systems and cell type used in the test. It is particularly important that culture conditions should be chosen that ensure optimal growth of cells during the expression period and colony forming ability of both mutant and non-mutant cells.

(C) *Preparation of cultures.* Cells are propagated from stock cultures, seeded in culture medium and incubated at 37 °C. Prior to use in this test, cultures may need to be cleansed of pre-existing mutant cells.

(D) *Metabolic activation.* Cells shall be exposed to the test substance both in

the presence and absence of an appropriate metabolic activation system. The most commonly used system is a co-factor-supplemented post-mitochondrial fraction (S9) prepared from the livers of rodents treated with enzyme-inducing agents such as Aroclor 1254 or a combination of phenobarbitone and β-naphthoflavone. The post-mitochondrial fraction is usually used at concentrations in the range from 1–10% v/v in the final test medium. The choice and condition of a metabolic activation system may depend upon the class of chemical being tested. In some cases it may be appropriate to utilize more than one concentration of post-mitochondrial fraction. A number of developments, including the construction of genetically engineered cell lines expressing specific activating enzymes, may provide the potential for endogenous activation. The choice of the cell lines used should be scientifically justified (e.g. by the relevance of the cytochrome P450 isoenzyme to the metabolism of the test substance).

(E) *Test substance/preparations.* Solid test substances should be dissolved or suspended in appropriate solvents or vehicles and diluted if appropriate prior to treatment of the cells. Liquid test substances may be added directly to the test systems and/or diluted prior to treatment. Fresh preparations should be employed unless stability data demonstrate the acceptability of storage.

(ii) *Test conditions*—(A) *Solvent/vehicle.* The solvent/vehicle shall not be suspected of chemical reaction with the test substance and shall be compatible with the survival of the cells and the S9 activity. If other than well-known solvent/vehicles are used, their inclusion should be supported by data indicating their compatibility. It is recommended that wherever possible, the use of an aqueous solvent/vehicle be considered first. When testing water-unstable substances, the organic solvents used should be free of water. Water can be removed by adding a molecular sieve.

(B) *Exposure concentrations.* (*1*) Among the criteria to be considered when determining the highest concentration are cytotoxicity and solubility in the test system and changes in pH or osmolality.

(*2*) Cytotoxicity should be determined with and without metabolic activation in the main experiment using an appropriate indicator of cell integrity and growth, such as relative cloning efficiency (survival) or relative total growth. It may be useful to determine cytotoxicity and solubility in a preliminary experiment.

(*3*) At least four analyzable concentrations shall be used. Where there is cytotoxicity, these concentrations shall cover a range from the maximum to little or no toxicity; this will usually mean that the concentration levels should be separated by no more than a factor between 2 and $\sqrt{10}$. If the maximum concentration is based on cytotoxicity then it shall result in approximately 10–20% but not less than 10% relative survival (relative cloning efficiency) or relative total growth. For relatively non-cytotoxic compounds the maximum concentration should be 5 mg/ml, 5 µl/ml, or 0.01 M, whichever is the lowest.

(*4*) Relatively insoluble substances should be tested up to or beyond their limit of solubility under culture conditions. Evidence of insolubility should be determined in the final treatment medium to which cells are exposed. It may be useful to assess solubility at the beginning and end of the treatment, as solubility can change during the course of exposure in the test system due to presence of cells, S9, serum etc. Insolubility can be detected by using the unaided eye. The precipitate should not interfere with the scoring.

(C) *Controls.* (*1*) Concurrent positive and negative (solvent or vehicle) controls both with and without metabolic activation shall be included in each experiment. When metabolic activation is used the positive control chemical shall be one that requires activation to give a mutagenic response.

(*2*) Examples of positive control substances include:

Metabolic Activation condition	Locus	Chemical	CAS No.
Absence of exogenous metabolic activation	HPRT	Ethylmethanesulfonate.	[CAS no. 62–50–0]

Metabolic Activation condition	Locus	Chemical	CAS No.
	.....	Ethylnitrosourea	[CAS no. 759–73–9]
	TK (small and large colonies).	Methylmethanesulfonate.	[CAS no. 66–27–3]
	XPRT	Ethylmethanesulfonate.	[CAS no. 62–50–0]
		Ethylnitrosourea	[CAS no. 759–73–9]
Presence of exogenous metabolic activation.	HPRT	3-Methylcholanthrene.	[CAS no. 56–49–5]
		N-Nitrosodimethylamine.	[CAS no. 62–75–9]
		7,12-Dimethylbenzanthracene.	[CAS no. 57–97–6]
	TK (small and large colonies).	Cyclophosphamide (monohydrate).	[CAS no. 50–18–0] [CAS no. 6055–19–2]
		Benzo(a)pyrene	[CAS no. 50–32–8]
		3-Methylcholanthrene.	[CAS no. 56–49–5]
	XPRT	N-Nitrosodimethylamine (for high levels of S-9).	[CAS no. 62–75–9]
		Benzo(a)pyrene	[CAS no. 50–32–8]

(*3*) Other appropriate positive control reference substances may be used, e.g., if a laboratory has a historical data base on 5-Bromo 2′-deoxyuridine [CAS No. 59–14–3], this reference substance could be used as well. The use of chemical class-related positive control chemicals may be considered, when available.

(*4*) Negative controls, consisting of solvent or vehicle alone in the treatment medium, and treated in the same way as the treatment groups shall be included. In addition, untreated controls should also be used unless there are historical control data demonstrating that no deleterious or mutagenic effects are induced by the chosen solvent.

(3) *Procedure*—(i) *Treatment with test substance.* (A) Proliferating cells shall be exposed to the test substance both with and without metabolic activation. Exposure shall be for a suitable period of time (usually 3 to 6 hrs is effective). Exposure time may be extended over one or more cell cycles.

(B) Either duplicate or single treated cultures may be used at each concentration tested. When single cultures are used, the number of concentrations should be increased to ensure an adequate number of cultures for analysis (e.g. at least eight analyzsable concentrations). Duplicate negative (solvent) control cultures should be used.

(C) Gaseous or volatile substances should be tested by appropriate methods, such as in sealed culture vessels. Methods described in the references under paragraphs (g)(20) and (g)(21) of this section may be used.

(ii) *Measurement of survival, viability, and mutant frequency.* (A) At the end of the exposure period, cells shall be washed and cultured to determine survival and to allow for expression of the mutant phenotype. Measurement of cytotoxicity by determining the relative cloning efficiency (survival) or relative total growth of the cultures is usually initiated after the treatment period.

(B) Each locus has a defined minimum time requirement to allow near optimal phenotypic expression of newly induced mutants (HPRT and XPRT require at least 6–8 days, and TK at least 2 days). Cells are grown in medium with and without selective agent(s) for determination of numbers of mutants and cloning efficiency, respectively. The measurement of viability (used to calculate mutant frequency) is initiated at the end of the expression time by plating in non-selective medium.

(C) If the test substance is positive in the L5178Y $TK^{+/-}$ test, colony sizing should be performed on at least one of the test cultures (the highest positive concentration) and on the negative and positive controls. If the test substance is negative in the L5178Y $TK^{+/-}$ test, colony sizing should be performed on the negative and positive controls. In studies using TK6$TK^{+/-}$, colony sizing may also be performed.

(f) *Data and reporting*—(1) *Treatment of results.* (i) Data shall include

cytotoxicity and viability determination, colony counts and mutant frequencies for the treated and control cultures. In the case of a positive response in the L5178Y TK$^{+/-}$ test, colonies are scored using the criteria of small and large colonies on at least one concentration of the test substance (highest positive concentration) and on the negative and positive control. The molecular and cytogenetic nature of both large and small colony mutants has been explored in detail and is discussed in the references under paragraphs (g)(22) and (g)(23) of this section. In the TK$^{+/-}$ test, colonies are scored using the criteria of normal growth (large) and slow growth (small) colonies (a scoring system similar to the one described in the reference under paragraph (g)(24) of this section may be used). Mutant cells that have suffered the most extensive genetic damage have prolonged doubling times and thus form small colonies. This damage typically ranges in scale from the losses of the entire gene to karyotypically visible chromosome aberrations. The induction of small colony mutants has been associated with chemicals that induce gross chromosome aberrations. Less seriously affected mutant cells grow at rates similar to the parental cells and form large colonies.

(ii) Survival (relative cloning efficiencies) or relative total growth shall be given. Mutant frequency shall be expressed as number of mutant cells per number of surviving cells.

(iii) Individual culture data shall be provided. Additionally, all data shall be summarized in tabular form.

(iv) There is no requirement for verification of a clear positive response. Equivocal results shall be clarified by further testing preferably using a modification of experimental conditions. Negative results need to be confirmed on a case-by-case basis. In those cases where confirmation of negative results is not considered necessary, justification should be provided. Modification of study parameters to extend the range of conditions assessed should be considered in follow-up experiments for either equivocal or negative results. Study parameters that might be modified include the concentration spacing, and the metabolic activation conditions.

(2) *Evaluation and interpretation of results.* (i) There are several criteria for determining a positive result, such as a concentration-related, or a reproducible increase in mutant frequency. Biological relevance of the results should be considered first. Statistical methods may be used as an aid in evaluating the test results. Statistical significance should not be the only determining factor for a positive response.

(ii) A test substance, for which the results do not meet the criteria described in paragraph (f)(2)(i) of this section is considered non-mutagenic in this system.

(iii) Although most studies will give clearly positive or negative results, in rare cases the data set will preclude making a definite judgement about the activity of the test substance. Results may remain equivocal or questionable regardless of the number of times the experiment is repeated.

(iv) Positive results for an *in vitro* mammalian cell gene mutation test indicate that the test substance induces gene mutations in the cultured mammalian cells used. A positive concentration-response that is reproducible is most meaningful. Negative results indicate that, under the test conditions, the test substance does not induce gene mutations in the cultured mammalian cells used.

(3) *Test report.* The test report shall include the following information:

(i) Test substance:

(A) Identification data and CAS no., if known.

(B) Physical nature and purity.

(C) Physicochemical properties relevant to the conduct of the study.

(D) Stability of the test substance.

(ii) Solvent/vehicle:

(A) Justification for choice of vehicle/solvent.

(B) Solubility and stability of the test substance in solvent/vehicle, if known.

(iii) Cells:

(A) Type and source of cells.

(B) Number of cell cultures.

(C) Number of cell passages, if applicable.

(D) Methods for maintenance of cell cultures, if applicable.

(E) Absence of mycoplasma.

(iv) Test conditions:

(A) Rationale for selection of concentrations and number of cell cultures including e.g., cytotoxicity data and solubility limitations, if available.

(B) Composition of media, CO_2 concentration.

(C) Concentration of test substance.

(D) Volume of vehicle and test substance added.

(E) Incubation temperature.

(F) Incubation time.

(G) Duration of treatment.

(H) Cell density during treatment.

(I) Type and composition of metabolic activation system including acceptability criteria.

(J) Positive and negative controls.

(K) Length of expression period (including number of cells seeded, and subcultures and feeding schedules, if appropriate).

(L) Selective agent(s).

(M) Criteria for considering tests as positive, negative or equivocal.

(N) Methods used to enumerate numbers of viable and mutant cells.

(O) Definition of colonies of which size and type are considered (including criteria for ''small'' and ''large'' colonies, as appropriate).

(v) Results:

(A) Signs of toxicity.

(B) Signs of precipitation.

(C) Data on pH and osmolality during the exposure to the test substance, if determined.

(D) Colony size if scored for at least negative and positive controls.

(E) Laboratory's adequacy to detect small colony mutants with the L5178Y $TK^{+/-}$ system, where appropriate.

(F) Dose-response relationship, where possible.

(G) Statistical analyses, if any.

(H) Concurrent negative (solvent/vehicle) and positive control data.

(I) Historical negative (solvent/vehicle) and positive control data with ranges, means, and standard deviations.

(J) Mutant frequency.

(vi) Discussion of the results.

(vii) Conclusion.

(g) *References.* For additional background information on this test guideline, the following references should be consulted. These references are available for inspection at the TSCA Nonconfidential Information Center, Rm. NE–B607, Environmental Protection Agency, 401 M St., SW., Washington, DC, 12 noon to 4 p.m., Monday through Friday, except legal holidays.

(1) Chu, E.H.Y. and Malling, H.V. Mammalian Cell Genetics. II. Chemical Induction of Specific Locus Mutations in Chinese Hamster Cells *In Vitro*, Proc. National Academy Science (USA, 1968) 61, 1306–1312.

(2) Liber, H.L. and Thilly, W.G. Mutation Assay at the Thymidine Kinase Locus in Diploid Human Lymphoblasts. *Mutation Research*. 94, 467–485 (1982).

(3) Moore, M.M., Harrington-Brock, K., Doerr, C.L., and Dearfield, K.L. Differential Mutant Quantitation at the Mouse Lymphoma TK and CHO HGPRT Loci. *Mutagenesis*. 4, 394–403 (1989).

(4) Aaron, C.S. and Stankowski, Jr., L.F. Comparison of the AS52/XPRT and the CHO/HPRT Assays: Evaluation of Six Drug Candidates. *Mutation Research*. 223, 121–128 (1989).

(5) Aaron, C.S., Bolcsfoldi, G., Glatt, H.R., Moore, M., Nishi, Y., Stankowski, L., Theiss, J., and Thompson, E. Mammalian Cell Gene Mutation Assays Working Group Report. Report of the International Workshop on Standardization of Genotoxicity Test Procedures. *Mutation Research*. 312, 235–239 (1994).

(6) Scott, D., Galloway, S.M., Marshall, R.R., Ishidate, M., Brusick, D., Ashby, J., and Myhr, B.C. Genotoxicity Under Extreme Culture Conditions. A report from ICPEMC Task Group 9. *Mutation Research*. 257, 147–204 (1991).

(7) Clive, D., McCuen, R., Spector, J.F.S., Piper, C., and Mavournin, K.H. Specific Gene Mutations in L5178Y Cells in Culture. A Report of the U.S. Environmental Protection Agency Gene-Tox Program. *Mutation Research*. 115, 225–251 (1983).

(8) Li, A.P., Gupta, R.S., Heflich, R.H., and Wasson, J. S. A Review and Analysis of the Chinese Hamster Ovary/Hypoxanthine Guanine Phosphoribosyl Transferase System to Determine the Mutagenicity of Chemical Agents: A Report of Phase III of the U.S. Environmental Protection Agency Gene-Tox Program. *Mutation Research*. 196, 17–36 (1988).

(9) Li, A.P., Carver, J.H., Choy, W.N., Hsie, A.W., Gupta, R.S., Loveday, K.S., O'Neill, J.P., Riddle, J.C., Stankowski, Jr., L.F., and Yang, L.L. A Guide for the Performance of the Chinese Hamster Ovary Cell/Hypoxanthine-Guanine Phosphoribosyl Transferase Gene Mutation Assay. *Mutation Research*. 189, 135–141 (1987).

(10) Liber, H.L., Yandell, D.W., and Little, J.B. A Comparison of Mutation Induction at the tk and hprt Loci in Human Lymphoblastoid Cells; Quantitative Differences are Due to an Additional Class of Mutations at the Autosomal TK Locus. *Mutation Research*. 216, 9–17 (1989).

(11) Stankowski, L.F. Jr., Tindall, K.R., and Hsie, A.W. Quantitative and Molecular Analyses of Ethyl Methanesulfonate- and ICR 191-Induced Molecular Analyses of Ethyl Methanesulfonate- and ICR 191-Induced Mutation in AS52 Cells. *Mutation Reseach*. 160, 133–147 (1986).

(12) Turner, N.T., Batson, A.G., and Clive, D. Eds. Kilbey, B.J. et al. Procedures for the L5178Y/TK$^{+/-}$ > TK$^{+/-}$ Mouse Lymphoma Cell Mutagenicity Assay. *Handbook of Mutagenicity Test Procedures* (Elsevier Science Publishers, New York, 1984) pp. 239–268.

(13) Arlett, C.F., Smith, D.M., Clarke, G.M., Green, M.H.L., Cole, J., McGregor, D.B., and Asquith, J.C. Ed. Kirkland, D.J. Mammalian Cell Gene Mutation Assays Based Upon Colony Formation. *Statistical Evaluation of Mutagenicity Test Data* (Cambridge University Press, 1989) pp. 66–101.

(14) Abbondandolo, A., Bonatti, S., Corti, G., Fiorio, R., Loprieno, N., and Mazzaccaro, A. Induction of 6-Thioguanine-Resistant Mutants in V79 Chinese Hamster Cells by Mouse-Liver Microsome-Activated Dimethylnitrosamine. *Mutation Research*. 46, 365–373 (1977).

(15) Ames, B.N., McCann, J., and Yamasaki, E. Methods for Detecting Carcinogens and Mutagens with the Salmonella/Mammalian-Microsome Mutagenicity Test. *Mutation Reseach*. 31, 347–364 (1975).

(16) Clive, D., Johnson, K.O., Spector, J.F.S., Batson, A.G., and Brown M.M.M. Validation and Characterization of the L5178Y/TK$^{+/-}$ Mouse Lymphoma Mutagen Assay System. *Mutation Reseach*. 59, 61–108 (1979).

(17) Maron, D.M. and Ames, B.N. Revised Methods for the Salmonella Mutagenicity Test. *Mutation Reseach*. 113, 173, 215 (1983).

(18) Elliott, B.M., Combes, R.D., Elcombe, C.R., Gatehouse, D.G., Gibson, G.G., Mackay, J.M., and Wolf, R.C. Alternatives to Aroclor 1254-Induced S9 in *In Vitro* Genotoxicity Assays. *Mutagenesis*. 7, 175–177 (1992).

(19) Matsushima, T., Sawamura, M., Hara, K., and Sugimura, T. A Safe Substitute for Polychlorinated Biphenyls as an Inducer of Metabolic Activation Systems. (Eds.) de Serres, F.J., Fouts, J.R., Bend, J.R., and Philpot, R.M. *In Vitro Metabolic Activation in Mutagenesis Testing* (Elsevier, North-Holland, 1976) pp. 85–88.

(20) Krahn, D.F., Barsky, F.C., and McCooey, K.T. Eds. Tice, R.R., Costa, D.L., and Schaich, K.M. CHO/HGPRT Mutation Assay: Evaluation of Gases and Volatile Liquids. *Genotoxic Effects of Airborne Agents* (New York, Plenum, 1982) pp. 91–103.

(21) Zamora, P.O., Benson, J.M., Li, A.P., and Brooks, A.L. Evaluation of an Exposure System Using Cells Grown on Collagen Gels for Detecting Highly Volatile Mutagens in the CHO/HGPRT Mutation Assay. *Environmental Mutagenesis*. 5, 795–801 (1983).

(22) Applegate, M.L., Moore, M.M., Broder, C.B., Burrell, A., and Hozier, J.C. Molecular Dissection of Mutations at the Heterozygous Thymidine Kinase Locus in Mouse Lymphoma Cells. Proc. National Academy Science (USA, 1990) 87, 51–55.

(23) Moore, M.M., Clive, D., Hozier, J.C., Howard, B.E., Batson, A.G., Turner, N.T., and Sawyer, J. Analysis of Trifluorothymidine-Resistant (TFT^{r}) Mutants of L5178Y/TK$^{+/-}$ Mouse Lymphoma Cells. *Mutation Research*. 151, 161–174 (1985).

(24) Yandell, D.W., Dryja, T.P., and Little J.B. Molecular Genetic Analysis of Recessive Mutations at a Heterozygous Autosomal Locus in Human Cells. *Mutation Research*. 229, 89–102 (1990).

(25) Moore, M.M. and Doerr, C.L. Comparison of Chromosome Aberration Frequency and Small-Colony TK-Deficient Mutant Frequency in L5178Y/TK$^{+/-}$ 3.7.2C Mouse Lymphoma Cells. *Mutagenesis*. 5, 609–614 (1990).

§ 799.9537 TSCA in vitro mammalian chromosome aberration test.

(a) *Scope*—(1) *Applicability*. This section is intended to meet testing requirements under section 4 of the Toxic Substances Control Act (TSCA) (15 U.S.C. 2601).

(2) *Background*. The source material used in developing this TSCA test guideline is the Office of Prevention, Pesticides, and Toxic Substances (OPPTS) harmonized test guideline 870.5375 (August 1998, final guidelines). The source is available at the address in paragraph (i) of this section.

(b) *Purpose*. (1) The purpose of the *in vitro* chromosome aberration test is to identify agents that cause structural chromosome aberrations in cultured mammalian cells (see paragraphs (i)(1), (i)(2), and (i)(3) of this section). Structural aberrations may be of two types, chromosome or chromatid. With the majority of chemical mutagens, induced aberrations are of the chromatid type, but chromosome-type aberrations also occur. An increase in polyploidy may indicate that a chemical has the potential to induce numerical aberrations. However, this guideline is not designed to measure numerical aberrations and is not routinely used for that purpose. Chromosome mutations and related events are the cause of many human genetic diseases and there is substantial evidence that chromosome mutations and related events causing alterations in oncogenes and tumour-suppressor genes of somatic cells are

involved in cancer induction in humans and experimental animals.

(2) The *in vitro* chromosome aberration test may employ cultures of established cell lines, cell strains or primary cell cultures. The cells used are selected on the basis of growth ability in culture, stability of the karyotype, chromosome number, chromosome diversity, and spontaneous frequency of chromosome aberrations.

(c) *Definitions.* The definitions in section 3 of TSCA and in 40 CFR Part 792—Good Laboratory Practice Standards apply to this test guideline. The following definitions also apply to this test guideline.

Chromatid-type aberration is structural chromosome damage expressed as breakage of single chromatids or breakage and reunion between chromatids.

Chromosome-type aberration is structural chromosome damage expressed as breakage, or breakage and reunion, of both chromatids at an identical site.

Endoreduplication is a process in which after an S period of DNA replication, the nucleus does not go into mitosis but starts another S period. The result is chromosomes with 4, 8, 16,...chromatids.

Gap is an achromatic lesion smaller than the width of one chromatid, and with minimum misalignment of the chromatid(s).

Mitotic index is the ratio of cells in metaphase divided by the total number of cells observed in a population of cells; an indication of the degree of proliferation of that population.

Numerical aberration is a change in the number of chromosomes from the normal number characteristic of the cells utilized.

Polyploidy is a multiple of the haploid chromosome number (n) other than the diploid number (i.e., 3n, 4n, and so on).

Structural aberration is a change in chromosome structure detectable by microscopic examination of the metaphase stage of cell division, observed as deletions and fragments, intrachanges, and interchanges.

(d) *Initial considerations.* (1) Tests conducted *in vitro* generally require the use of an exogenous source of metabolic activation. This metabolic activation system cannot mimic entirely the mammalian *in vivo* conditions. Care should be taken to avoid conditions which would lead to positive results which do not reflect intrinsic mutagenicity and may arise from changes in pH, osmolality, or high levels of cytotoxicity (the test techniques described in the references under paragraphs (i)(4) and (i)(5) of this section may be used).

(2) This test is used to screen for possible mammalian mutagens and carcinogens. Many compounds that are positive in this test are mammalian carcinogens; however, there is not a perfect correlation between this test and carcinogenicity. Correlation is dependent on chemical class and there is increasing evidence that there are carcinogens that are not detected by this test because they appear to act through mechanisms other than direct DNA damage.

(e) *Principle of the test method.* Cell cultures are exposed to the test substance both with and without metabolic activation. At predetermined intervals after exposure of cell cultures to the test substance, they are treated with a metaphase-arresting substance (e.g., Colcemid® or colchicine), harvested, stained, and metaphase cells are analysed microscopically for the presence of chromosome aberrations.

(f) *Description of the method*—(1) *Preparations*—(i) *Cells.* A variety of cell lines, strains, or primary cell cultures, including human cells, may be used (e.g., Chinese hamster fibroblasts, human, or other mammalian peripheral blood lymphocytes).

(ii) *Media and culture conditions.* Appropriate culture media, and incubation conditions (culture vessels, CO^2 concentration, temperature and humidity) must be used in maintaining cultures. Established cell lines and strains must be checked routinely for stability in the modal chromosome number and the absence of *Mycoplasma* contamination and should not be used if contaminated. The normal cell-cycle time for the cells and culture conditions used should be known.

(iii) *Preparation of cultures*—(A) *Established cell lines and strains.* Cells are propagated from stock cultures, seeded in culture medium at a density such

that the cultures will not reach confluency before the time of harvest, and incubated at 37 °C.

(B) *Lymphocytes.* Whole blood treated with an anti-coagulant (e.g., heparin) or separated lymphocytes obtained from healthy subjects are added to culture medium containing a mitogen (e.g., phytohemagglutinin) and incubated at 37 °C.

(iv) *Metabolic activation*. Cells must be exposed to the test substance both in the presence and absence of an appropriate metabolic activation system. The most commonly used system is a co-factor-supplemented post-mitochondrial fraction (S9) prepared from the livers of rodents treated with enzyme-inducing agents such as Aroclor 1254 (the test techniques described in the references under paragraphs (i)(6), (i)(7), (8)(i), and (i)(9) of this section may be used), or a mixture of phenobarbitone and β-naphthoflavone (the test techniques described in the references under paragraphs (i)(10), (i)(11), and (i)(12) of this section may be used). The post-mitochondrial fraction is usually used at concentrations in the range from 1-10% v/v in the final test medium. The condition of a metabolic activation system may depend upon the class of chemical being tested. In some cases, it may be appropriate to utilize more than one concentration of post-mitochondrial fraction. A number of developments, including the construction of genetically engineered cell lines expressing specific activating enzymes, may provide the potential for endogenous activation. The choice of the cell lines used should be scientifically justified (e.g., by the relevance of the cytochrome P450 isoenzyme for the metabolism of the test substance).

(v) *Test substance/preparation*. Solid test substances should be dissolved or suspended in appropriate solvents or vehicles and diluted, if appropriate, prior to treatment of the cells. Liquid test substances may be added directly to the test systems and/or diluted prior to treatment. Fresh preparations of the test substance should be employed unless stability data demonstrate the acceptability of storage.

(2) *Test conditions*—(i) *Solvent/vehicle*. The solvent/vehicle should not be suspected of chemical reaction with the test substance and must be compatible with the survival of the cells and the S9 activity. If other than well-known solvent/vehicles are used, their inclusion should be supported by data indicating their compatibility. It is recommended that wherever possible, the use of an aqueous solvent/vehicle be considered first. When testing water-unstable substances, the organic solvents used should be free of water. Water can be removed by adding a molecular sieve.

(ii) *Exposure concentrations.* (A) Among the criteria to be considered when determining the highest concentration are cytotoxicity, solubility in the test system, and changes in pH or osmolality.

(B) Cytotoxicity should be determined with and without metabolic activation in the main experiment using an appropriate indication of cell integrity and growth, such as degree of confluency, viable cell counts, or mitotic index. It may be useful to determine cytotoxicity and solubility in a preliminary experiment.

(C) At least three analyzable concentrations should be used. Where cytotoxicity occurs, these concentrations should cover a range from the maximum to little or no toxicity; this will usually mean that the concentrations should be separated by no more than a factor between 2 and $\sqrt{10}$. At the time of harvesting, the highest concentration should show a significant reduction in degree of confluency, cell count or mitotic index, (all greater than 50%). The mitotic index is only an indirect measure of cytotoxic/cytostatic effects and depends on the time after treatment. However, the mitotic index is acceptable for suspension cultures in which other toxicity measurements may be cumbersome and impractical. Information on cell-cycle kinetics, such as average generation time (AGT), could be used as supplementary information. AGT, however, is an overall average that does not always reveal the existence of delayed subpopulations, and even slight increases in average generation time can be associated with very substantial delay in the time of optimal yield of aberrations. For relatively non-cytotoxic compounds the

maximum concentration should be 5 µg/ml, 5mg/ml, or 0.01M, whichever is the lowest.

(D) For relatively insoluble substances that are not toxic at concentrations lower than the insoluble concentration, the highest dose used should be a concentration above the limit of solubility in the final culture medium at the end of the treatment period. In some cases (e.g., when toxicity occurs only at higher than the lowest insoluble concentration) it is advisable to test at more than one concentration with visible precipitation. It may be useful to assess solubility at the beginning and the end of the treatment, as solubility can change during the course of exposure in the test system due to presence of cells, S9, serum etc. Insolubility can be detected by using the unaided eye. The precipitate should not interfere with the scoring.

(iii) *Controls.* (A) Concurrent positive and negative (solvent or vehicle) controls both with and without metabolic activation must be included in each experiment. When metabolic activation is used, the positive control chemical must be the one that requires activation to give a mutagenic response.

(B) Positive controls must employ a known clastogen at exposure levels expected to give a reproducible and detectable increase over background which demonstrates the sensitivity of the test system. Positive control concentrations should be chosen so that the effects are clear but do not immediately reveal the identity of the coded slides to the reader. Examples of positive-control substances include:

Metabolic activation condition	Chemical	CAS number
Absence of exogenous metabolic activation.	Methyl methanesulfonate.	[66–27–3]
	Ethyl methanesulfonate	[62–50–0]
	Ethylnitrosourea	[759–73–9]
	Mitomycin C	[50–07–7]
	4-Nitroquinoline-N-Oxide.	[56–57–5]
Presence of exogenous metabolic activation.	Benzo(a)pyrene	[50–32–8]
	Cyclophosphamide (monohydrate)	[50–18–0] ([6055–19–2])

(C) Other appropriate positive control substances may be used. The use of chemical class-related positive-control chemicals may be considered, when available.

(D) Negative controls, consisting of solvent or vehicle alone in the treatment medium, and treated in the same way as the treatment cultures, must be included for every harvest time. In addition, untreated controls should also be used unless there are historical-control data demonstrating that no deleterious or mutagenic effects are induced by the chosen solvent.

(g) *Procedure*—(1) *Treatment with test substance.* (i) Proliferating cells are treated with the test substance in the presence and absence of a metabolic-activation system. Treatment of lymphocytes should commence at about 48 hours after mitogenic stimulation.

(ii) Duplicate cultures must be used at each concentration, and are strongly recommended for negative/solvent control cultures. Where minimal variation between duplicate cultures can be demonstrated (the test techniques described in the references under paragraphs (i)(13) and (i)(14) of this section may be used), from historical data, it may be acceptable for single cultures to be used at each concentration.

(iii) Gaseous or volatile substances should be tested by appropriate methods, such as in sealed culture vessels (the test techniques described in the references under paragraphs (i)(15) and (i)(16) of this section may be used).

(2) *Culture harvest time.* In the first experiment, cells should be exposed to the test substance both with and without metabolic activation for 3–6 hours, and sampled at a time equivalent to about 1.5 normal cell-cycle length after the beginning of treatment (the test techniques described in the references under paragraph (i)(12) of this section may be used). If this protocol gives negative results both with and without activation, an additional experiment without activation should be done, with continuous treatment until sampling at a time equivalent to about 1.5 normal cell-cycle lengths. Certain chemicals may be more readily detected by treatment/sampling times longer than 1.5 cycle lengths. Negative results with metabolic activation need to be confirmed on a case-by-case

basis. In those cases where confirmation of negative results is not considered necessary, justification should be provided.

(3) *Chromosome preparation*. Cell cultures must be treated with Colcemid® or colchicine usually for 1 to 3 hours prior to harvesting. Each cell culture must be harvested and processed separately for the preparation of chromosomes. Chromosome preparation involves hypotonic treatment of the cells, fixation and staining.

(4) *Analysis*. (i) All slides, including those of positive and negative controls, must be independently coded before microscopic analysis. Since fixation procedures often result in the breakage of a proportion of metaphase cells with loss of chromosomes, the cells scored must therefore contain a number of centromeres equal to the modal number ± 2 for all cell types. At least 200 well-spread metaphases should be scored per concentration and control equally divided amongst the duplicates, if applicable. This number can be reduced when high numbers of aberrations are observed.

(ii) Though the purpose of the test is to detect structural chromosome aberrations, it is important to record polyploidy and endoreduplication when these events are seen.

(h) *Data and reporting*—(1) *Treatment of results*. (i) The experimental unit is the cell, and therefore the percentage of cells with structural chromosome aberration(s) should be evaluated. Different types of structural chromosome aberrations must be listed with their numbers and frequencies for experimental and control cultures. Gaps are recorded separately and reported but generally not included in the total aberration frequency.

(ii) Concurrent measures of cytotoxicity for all treated and negative control cultures in the main aberration experiment(s) should also be recorded.

(iii) Individual culture data should be provided. Additionally, all data should be summarized in tabular form.

(iv) There is no requirement for verification of a clear positive response. Equivocal results should be clarified by further testing preferably using modification of experimental conditions. The need to confirm negative results has been discussed in paragraph (g)(2) of this section. Modification of study parameters to extend the range of conditions assessed should be considered in follow-up experiments. Study parameters that might be modified include the concentration spacing and the metabolic activation conditions.

(2) *Evaluation and interpretation of results*. (i) There are several criteria for determining a positive result, such as a concentration-related increase or a reproducible increase in the number of cells with chromosome aberrations. Biological relevance of the results should be considered first. Statistical methods may be used as an aid in evaluating the test results (see paragraphs (i)(3) and (i)(13) of this section). Statistical significance should not be the only determining factor for a positive response.

(ii) An increase in the number of polyploid cells may indicate that the test substance has the potential to inhibit mitotic processes and to induce numerical chromosome aberrations. An increase in the number of cells with endoreduplicated chromosomes may indicate that the test substance has the potential to inhibit cell-cycle progression (the test techniques described in the references under paragraphs (i)(17) and (i)(18) of this section may be used).

(iii) A test substance for which the results do not meet the criteria in paragraphs (h)(2)(i) and (h)(2)(ii) of this section is considered nonmutagenic in this system.

(iv) Although most experiments will give clearly positive or negative results, in rare cases the data set will preclude making a definite judgement about the activity of the test substance. Results may remain equivocal or questionable regardless of the number of times the experiment is repeated.

(v) Positive results from the *in vitro* chromosome aberration test indicate that the test substance induces structural chromosome aberrations in cultured mammalian somatic cells. Negative results indicate that, under the test conditions, the test substance does not induce chromosome aberrations in cultured mammalian somatic cells.

(3) *Test report*. The test report must include the following information.

(i) Test substance.

(A) Identification data and CAS no., if known.

(B) Physical nature and purity.

(C) Physicochemical properties relevant to the conduct of the study.

(D) Stability of the test substance, if known.

(ii) Solvent/vehicle.

(A) Justification for choice of solvent/vehicle.

(B) Solubility and stability of the test substance in solvent/vehicle, if known.

(iii) Cells.

(A) Type and source of cells.

(B) Karyotype features and suitability of the cell type used.

(C) Absence of *Mycoplasma*, if applicable.

(D) Information on cell-cycle length.

(E) Sex of blood donors, whole blood or separated lymphocytes, mitogen used.

(F) Number of passages, if applicable.

(G) Methods for maintenance of cell cultures if applicable.

(H) Modal number of chromosomes.

(iv) Test conditions.

(A) Identity of metaphase arresting substance, its concentration and duration of cell exposure.

(B) Rationale for selection of concentrations and number of cultures including, e.g., cytotoxicity data and solubility limitations, if available.

(C) Composition of media, CO^2 concentration if applicable.

(D) Concentration of test substance.

(E) Volume of vehicle and test substance added.

(F) Incubation temperature.

(G) Incubation time.

(H) Duration of treatment.

(I) Cell density at seeding, if appropriate.

(J) Type and composition of metabolic activation system, including acceptability criteria.

(K) Positive and negative controls.

(L) Methods of slide preparation.

(M) Criteria for scoring aberrations.

(N) Number of metaphases analyzed.

(O) Methods for the measurements of toxicity.

(P) Criteria for considering studies as positive, negative or equivocal.

(v) Results.

(A) Signs of toxicity, e.g., degree of confluency, cell-cycle data, cell counts, mitotic index.

(B) Signs of precipitation.

(C) Data on pH and osmolality of the treatment medium, if determined.

(D) Definition for aberrations, including gaps.

(E) Number of cells with chromosome aberrations and type of chromosome aberrations given separately for each treated and control culture.

(F) Changes in ploidy if seen.

(G) Dose-response relationship, where possible.

(H) Statistical analyses, if any.

(I) Concurrent negative (solvent/vehicle) and positive control data.

(J) Historical negative (solvent/vehicle) and positive control data, with ranges, means and standard deviations.

(vi) Discussion of the results.

(vii) Conclusion.

(i) *References*. For additional background information on this test guideline, the following references should be consulte. These references are available for inspection at the TSCA Nonconfidential Information Center, Rm. NE–B607, Environmental Protection Agency, 401 M St., SW., Washington, DC, 12 noon to 4 p.m., Monday through Friday, except legal holidays.

(1) Evans, H.J. Cytological Methods for Detecting Chemical Mutagens. Chemical Mutagens, Principles and Methods for their Detection, Vol. 4, Hollaender, A. Ed. Plenum Press, New York and London, pp. 1-29 (1976).

(2) Ishidate, M. Jr. and Sofuni, T. The *In Vitro* Chromosomal Aberration Test Using Chinese Hamster Lung (CHL) Fibroblast Cells in Culture. Progress in Mutation Research, Vol. 5, Ashby, J. et al., Eds. Elsevier Science Publishers, Amsterdam-New York-Oxford, pp. 427–432 (1985).

(3) Galloway, S.M. et al. Chromosome aberration and sister chromatid exchanges in Chinese hamster ovary cells: Evaluation of 108 chemicals. *Environmental and Molecular Mutagenesis* 10 (suppl. 10), 1–175 (1987).

(4) Scott, D. et al.. Genotoxicity under Extreme Culture Conditions. A report from ICPEMC Task Group 9. *Mutation Research* 257, 147–204 (1991).

(5) Morita, T. et al. Clastogenicity of Low pH toVarious Cultured Mammalian Cells. *Mutation Research* 268, 297-305 (1992).

(6) Ames, B.N., McCann, J. and Yamasaki, E. Methods for Detecting Carcinogens and Mutagens with the Salmonella/Mammalian Microsome Mutagenicity Test. *Mutation Research* 31, 347–364 (1975).

(7) Maron, D.M. and Ames, B.N. Revised Methods for the Salmonella Mutagenicity Test. *Mutation Research* 113, 173-215 (1983).

(8) Natarajan, A.T. et al. Cytogenetic Effects of Mutagens/Carcinogens after Activation in a Microsomal System In Vitro, I. Induction of Chromosome Aberrations and Sister Chromatid Exchanges by Diethylnitrosamine (DEN) and Dimethylnitrosamine (DMN) in CHO Cells in the Presence of Rat-Liver Microsomes. *Mutation Research* 37, 83–90 (1976).

(9) Matsuoka, A., Hayashi, M. and Ishidate, M., Jr. Chromosomal Aberration Tests on 29 Chemicals Combined with S9 Mix In Vitro. *Mutation Research* 66, 277–290 (1979).

(10) Elliot, B.M. et al. Report of UK Environmental Mutagen Society Working Party. Alternatives to Aroclor 1254-induced S9 in In Vitro Genotoxicity Assays. *Mutagenesis* 7, 175–177 (1992).

(11) Matsushima, T. et al. A Safe Substitute for Polychlorinated Biphenyls as an Inducer of Metabolic Activation Systems. de Serres, F.J., Fouts, J.R., Bend, J.R. and Philpot, R.M. Eds. In Vitro Metabolic Activation in Mutagenesis Testing, Elsevier, North-Holland, pp. 85–88 (1976).

(12) Galloway, S.M. et al. Report from Working Group on In Vitro Tests for Chromosomal Aberrations. *Mutation Research* 312, 241–261 (1994).

(13) Richardson, C. et al. Analysis of Data from In Vitro Cytogenetic Assays. Statistical Evaluation of Mutagenicity Test Data. Kirkland, D.J., Ed. Cambridge University Press, Cambridge, pp. 141–154 (1989).

(14) Soper, K.A. and Galloway S.M. Replicate Flasks are not Necessary for In Vitro Chromosome Aberration Assays in CHO Cells. *Mutation Research* 312, 139–149 (1994).

(15) Krahn, D.F., Barsky, F.C. and McCooey, K.T. CHO/HGPRT Mutation Assay: Evaluation of Gases and Volatile Liquids. Tice, R.R., Costa, D.L., Schaich, K.M. Eds. Genotoxic Effects of Airborne Agents. New York, Plenum, pp. 91–103 (1982).

(16) Zamora, P.O. et al. Evaluation of an Exposure System Using Cells Grown on Collagen Gels for Detecting Highly Volatile Mutagens in the CHO/HGPRT Mutation Assay. *Environmental Mutagenesis* 5, 795–801 (1983).

(17) Locke-Huhle, C. Endoreduplication in Chinese hamster cells during alpha-radiation induced G2 arrest. *Mutation Research* 119, 403-413 (1983).

(18) Huang, Y., Change, C. and Trosko, J.E. Aphidicolin—induced endoreduplication in Chinese hamster cells. *Cancer Research* 43, 1362–1364 (1983).

[65 FR 78807, Dec. 15, 2000]

§ 799.9538 TSCA mammalian bone marrow chromosomal aberration test.

(a) *Scope.* This section is intended to meet the testing requirements under section 4 of TSCA. The mammalian bone marrow chromosomal aberration test is used for the detection of structural chromosome aberrations induced by test compounds in bone marrow cells of animals, usually rodents. Structural chromosome aberrations may be of two types, chromosome or chromatid. An increase in polyploidy may indicate that a chemical has the potential to induce numerical aberrations. With the majority of chemical mutagens, induced aberrations are of the chromatid-type, but chromosome-type aberrations also occur. Chromosome mutations and related events are the cause of many human genetic diseases and there is substantial evidence that chromosome mutations and related events causing alterations in oncogenes and tumor suppressor genes are involved in cancer in humans and experimental systems.

(b) *Source.* The source material used in developing this TSCA test guideline is the OECD guideline 475 (February 1997). This source is available at the address in paragraph (g) of this section.

(c) *Definitions.* The following definitions apply to this section:

Chromatid-type aberration is structural chromosome damage expressed as breakage of single chromatids or breakage and reunion between chromatids.

Chromosome-type aberration is structural chromosome damage expressed as breakage, or breakage and reunion, of both chromatids at an identical site.

Endoreduplication is a process in which after an S period of DNA replication, the nucleus does not go into mitosis but starts another S period. The result is chromosomes with 2,4,8,...chromatids.

Gap is an achromatic lesion smaller than the width of one chromatid, and with minimum misalignment of the chromatids.

Numerical aberration is a change in the number of chromosomes from the normal number characteristic of the animals utilized.

Polyploidy is a multiple of the haploid chromosome number (n) other

than the diploid number (i.e., 3n, 4n and so on).

Structural aberration is a change in chromosome structure detectable by microscopic examination of the metaphase stage of cell division, observed as deletions and fragments, intrachanges or interchanges.

(d) *Initial considerations.* (1) Rodents are routinely used in this test. Bone marrow is the target tissue in this test, since it is a highly vascularised tissue, and it contains a population of rapidly cycling cells that can be readily isolated and processed. Other species and target tissues are not the subject of this section.

(2) This chromosome aberration test is especially relevant to assessing mutagenic hazard in that it allows consideration of factors of *in vivo* metabolism, pharmacokinetics and DNA-repair processes although these may vary among species and among tissues. An *in vivo* test is also useful for further investigation of a mutagenic effect detected by an *in vitro* test.

(3) If there is evidence that the test substance, or a reactive metabolite, will not reach the target tissue, it is not appropriate to use this test.

(e) *Test method*—(1) *Principle.* Animals are exposed to the test substance by an appropriate route of exposure and are sacrificed at appropriate times after treatment. Prior to sacrifice, animals are treated with a metaphase-arresting agent (e.g., colchicine or Colcemid®). Chromosome preparations are then made from the bone marrow cells and stained, and metaphase cells are analyzed for chromosome aberrations.

(2) *Description*—(i) *Preparations*—(A) *Selection of animal species.* Rats, mice and Chinese hamsters are commonly used, although any appropriate mammalian species may be used. Commonly used laboratory strains of young healthy adult animals should be employed. At the commencement of the study, the weight variation of animals should be minimal and not exceed ± 20% of the mean weight of each sex.

(B) *Housing and feeding conditions.* The temperature in the experimental animal room should be 22 °C ± 3 °C). Although the relative humidity should be at least 30% and preferably not exceed 70% other than during room cleaning, the aim should be 50–60%. Lighting should be artificial, the sequence being 12 hrs light, 12 hrs dark. For feeding, conventional laboratory diets may be used with an unlimited supply of drinking water. The choice of diet may be influenced by the need to ensure a suitable admixture of a test substance when administered by this method. Animals may be housed individually, or be caged in small groups of the same sex.

(C) *Preparation of the animals.* Healthy young adult animals shall be randomly assigned to the control and treatment groups. Cages should be arranged in such a way that possible effects due to cage placement are minimized. The animals are identified uniquely. The animals are acclimated to the laboratory conditions for at least 5 days.

(D) *Preparation of doses.* Solid test substances shall be dissolved or suspended in appropriate solvents or vehicles and diluted, as appropriate, prior to dosing of the animals. Liquid test substances may be dosed directly or diluted prior to dosing. Fresh preparations of the test substance should be employed unless stability data demonstrate the acceptability of storage.

(ii) *Test conditions*—(A) *Solvent/vehicle.* The solvent/vehicle shall not produce toxic effects at the dose levels used, and shall not be suspected of chemical reaction with the test substance. If other than well-known solvents/vehicles are used, their inclusion should be supported with data indicating their compatibility. It is recommended that wherever possible, the use of an aqueous solvent/vehicle should be considered first.

(B) *Controls.* (*1*) Concurrent positive and negative (solvent/vehicle) controls shall be included for each sex in each test. Except for treatment with the test substance, animals in the control groups should be handled in an identical manner to the animals in the treated groups.

(*2*) Positive controls shall produce structural chromosome aberrations *in vivo* at exposure levels expected to give a detectable increase over background. Positive control doses should be chosen so that the effects are clear but do not immediately reveal the identity of the

coded slides to the reader. It is acceptable that the positive control be administered by a route different from the test substance and sampled at only a single time. The use of chemical class related positive control chemicals may be considered, when available. Examples of positive control substances include:

Chemical	CAS No.
Triethylenemelamine	[CAS no. 51–18–3]
Ethyl methanesulphonate	[CAS no. 62–50–0]
Ethyl nitrosourea	[CAS no. 759–73–9]
Mitomycin C	[CAS no. 50–07–7]
Cyclophosphamide (monohydrate)	[CAS no. 50–18–0] [CAS no. 6055–19–2]

(*3*) Negative controls, treated with solvent or vehicle alone, and otherwise treated in the same way as the treatment groups, shall be included for every sampling time, unless acceptable inter-animal variability and frequencies of cells with chromosome aberrations are available from historical control data. If single sampling is applied for negative controls, the most appropriate time is the first sampling time. In the absence of historical or published control data demonstrating that no deleterious or mutagenic effects are induced by the chosen solvent/vehicle, untreated animals should be used.

(3) *Procedure*—(i) *Number and sex of animals.* Each treated and control group shall include at least 5 analyzable animals per sex. If at the time of the study there are data available from studies in the same species and using the same route of exposure that demonstrate that there are no substantial differences in toxicity between sexes, then testing in a single sex will be sufficient. Where human exposure to chemicals may be sex-specific, as for example with some pharmaceutical agents, the test should be performed with animals of the appropriate sex.

(ii) *Treatment schedule.* (A) Test substances are preferably administered as a single treatment. Test substances may also be administered as a split dose, i.e. two treatments on the same day separated by no more than a few hrs, to facilitate administering a large volume of material. Other dose regimens should be scientifically justified.

(B) Samples shall be taken at two separate times following treatment on one day. For rodents, the first sampling interval is 1.5 normal cell cycle length (the latter being normally 12–18 hr) following treatment. Since the time required for uptake and metabolism of the test substance as well as its effect on cell cycle kinetics can affect the optimum time for chromosome aberration detection, a later sample collection 24 hr after the first sample time is recommended. If dose regimens of more than one day are used, one sampling time at 1.5 normal cell cycle lengths after the final treatment should be used.

(C) Prior to sacrifice, animals shall be injected intraperitoneally with an appropriate dose of a metaphase arresting agent (e.g. Colcemid® or colchicine). Animals are sampled at an appropriate interval thereafter. For mice this interval is approximately 3–5 hrs; for Chinese hamsters this interval is approximately 4–5 hrs. Cells shall be harvested from the bone marrow and analyzed from chromosome aberrations.

(iii) *Dose levels.* If a range finding study is performed because there are no suitable data available, it shall be performed in the same laboratory, using the same species, strain, sex, and treatment regimen to be used in the main study (an approach to dose selection is presented in the reference under paragraph (g)(5) of this section). If there is toxicity, three dose levels shall be used for the first sampling time. These dose levels shall cover a range from the maximum to little or no toxicity. At the later sampling time only the highest dose needs to be used. The highest dose is defined as the dose producing signs of toxicity such that higher dose levels, based on the same dosing regimen, would be expected to produce lethality. Substances with specific biological activities at low nontoxic doses (such as hormones and mitogens) may be exceptions to the dose-setting criteria and should be evaluated on a case-by-case basis. The highest dose may also be defined as a dose that produces some indication of toxicity in the bone marrow (e.g. greater than 50% reduction in mitotic index).

(iv) *Limit test.* If a test at one dose level of at least 2,000 mg/kg body weight using a single treatment, or as two treatments on the same day, produces no observable toxic effects, and if genotoxicity would not be expected based on data from structurally related compounds, then a full study using three dose levels may not be considered necessary. For studies of a longer duration, the limit dose is 2,000 mg/kg/body weight/day for treatment up to 14 days, and 1,000 mg/kg/body weight/day for treatment longer than 14 days. Expected human exposure may indicate the need for a higher dose level to be used in the limit test.

(v) *Administration of doses.* The test substance is usually administered by gavage using a stomach tube or a suitable intubation cannula, or by intraperitoneal injection. Other routes of exposure may be acceptable where they can be justified. The maximum volume of liquid that can be administered by gavage or injection at one time depends on the size of the test animal. The volume should not exceed 2 ml/100g body weight. The use of volumes higher than these must be justified. Except for irritating or corrosive substances which will normally reveal exacerbated effects with higher concentrations, variability in test volume should be minimized by adjusting the concentration to ensure a constant volume at all dose levels.

(vi) *Chromosome preparation.* Immediately after sacrifice, bone marrow shall be obtained, exposed to hypotonic solution and fixed. The cells shall be then spread on slides and stained.

(vii) *Analysis.* (A) The mitotic index should be determined as a measure of cytotoxicity in at least 1,000 cells per animal for all treated animals (including positive controls) and untreated negative control animals.

(B) At least 100 cells should be analyzed for each animal. This number could be reduced when high numbers of aberrations are observed. All slides, including those of positive and negative controls, shall be independently coded before microscopic analysis. Since slide preparation procedures often result in the breakage of a proportion of metaphases with loss of chromosomes, the cells scored should therefore contain a number of centromeres equal to the number $2n \pm 2$.

(f) *Data and reporting*—(1) *Treatment of results.* Individual animal data shall be presented in tabular form. The experimental unit is the animal. For each animal the number of cells scored, the number of aberrations per cell and the percentage of cells with structural chromosome aberration(s) shall be evaluated. Different types of structural chromosome aberrations shall be listed with their numbers and frequencies for treated and control groups. Gaps shall be recorded separately and reported but generally not included in the total aberration frequency. If there is no evidence for a difference in response between the sexes, the data may be combined for statistical analysis.

(2) *Evaluation and interpretation of results.* (i) There are several criteria for determining a positive result, such as a dose-related increase in the relative number of cells with chromosome aberrations or a clear increase in the number of cells with aberrations in a single dose group at a single sampling time. Biological relevance of the results should be considered first. Statistical methods may be used as an aid in evaluating the test results (some statistical methods are described in the reference under paragraph (g)(6) of this section). Statistical significance should not be the only determining factor for a positive response. Equivocal results should be clarified by further testing preferably using a modification of experimental conditions.

(ii) An increase in polyploidy may indicate that the test substance has the potential to induce numerical chromosome aberrations. An increase in endoreduplication may indicate that the test substance has the potential to inhibit cell cycle progression. This phenomenon is described in the references under paragraphs (g)(7) and (g)(8) of this section.

(iii) A test substance for which the results do not meet the criteria described in paragraph (f)(2)(i) of this section is considered non-mutagenic in this test.

(iv) Although most experiments will give clearly positive or negative results, in rare cases the data set will preclude making a definite judgment

about the activity of the test substance. Results may remain equivocal or questionable regardless of the number of experiments performed.

(v) Positive results from the *in vivo* chromosome aberration test indicate that a substance induces chromosome aberrations in the bone marrow of the species tested. Negative results indicate that, under the test conditions, the test substance does not induce chromosome aberrations in the bone marrow of the species tested.

(vi) The likelihood that the test substance or its metabolites reach the general circulation or specifically the target tissue (e.g., systemic toxicity) should be discussed.

(3) *Test report.* The test report shall include the following information:

(i) Test substance:

(A) Identification data and CAS No., if known.

(B) Physical nature and purity.

(C) Physicochemical properties relevant to the conduct of the study.

(D) Stability of the test substance, if known.

(ii) Solvent/vehicle:

(A) Justification for choice of vehicle.

(B) Solubility and stability of the test substance in solvent/vehicle, if known.

(iii) Test animals:

(A) Species/strain used.

(B) Number, age and sex of animals.

(C) Source, housing conditions, diet, etc.

(D) Individual weight of the animals at the start of the test, including body weight range, mean and standard deviation for each group.

(iv) Test conditions:

(A) Positive and negative (vehicle/solvent) controls.

(B) Data from range-finding study, if conducted.

(C) Rationale for dose level selection.

(D) Details of test substance preparation.

(E) Details of the administration of the test substance.

(F) Rationale for route of administration.

(G) Methods for verifying that the test substance reached the general circulation or target tissue, if applicable.

(H) Conversion from diet/drinking water test substance concentration parts per million (ppm) to the actual dose (mg/kg body weight/day), if applicable.

(I) Details of food and water quality.

(J) Detailed description of treatment and sampling schedules.

(K) Methods for measurement of toxicity.

(L) Identity of metaphase arresting substance, its concentration and duration of treatment.

(M) Methods of slide preparation.

(N) Criteria for scoring aberrations.

(O) Number of cells analyzed per animal.

(P) Criteria for considering studies as positive, negative or equivocal.

(v) Results:

(A) Signs of toxicity.

(B) Mitotic index.

(C) Type and number of aberrations, given separately for each animal.

(D) Total number of aberrations per group with means and standard deviations.

(E) Number of cells with aberrations per group with means and standard deviations.

(F) Changes in ploidy, if seen.

(G) Dose-response relationship, where possible.

(H) Statistical analyses, if any.

(I) Concurrent negative control data.

(J) Historical negative control data with ranges, means and standard deviations.

(K) Concurrent positive control data.

(vi) Discussion of the results.

(vii) Conclusion.

(g) *References.* For additional background information on this test guideline, the following references should be consulted. These references are available for inspection at the TSCA Nonconfidential Information Center, Rm. NE–B607, Environmental Protection Agency, 401 M St., SW., Washington, DC, 12 noon to 4 p.m., Monday through Friday, except legal holidays.

(1) Adler, I.D. Eds. S. Venitt and J.M. Parry. Cytogenetic Tests in Mammals. *Mutagenicity Testing: A Practical Approach*. (IRL Press, Oxford, Washington DC, 1984) pp. 275–306.

(2) Preston, R.J., Dean, B.J., Galloway, S., Holden, H., McFee, A.F., and Shelby, M. Mammalian *In Vivo* Cytogenetic Assays: Analysis of Chromosome Aberrations in

Bone Marrow Cells. *Mutation Research*. 189, 157–165 (1987).

(3) Richold, M., Chandley, A., Ashby, J., Gatehouse, D.G., Bootman, J., and Henderson, L. Ed. D.J. Kirkland. *In Vivo* Cytogenetic Assays. *Basic Mutagenicity Tests, UKEMS Recommended Procedures.* UKEMS Subcommittee on Guidelines for Mutagenicity Testing. Report. Part I revised. (Cambridge University Press, Cambridge, NY, Port Chester, Melbourne, Sydney, 1990) pp. 115–141.

(4) Tice, R.R., Hayashi, M., MacGregor, J.T., Anderson, D., Blakey, D.H., Holden, H.E., Kirsch-Volders, M., Oleson Jr., F.B., Pacchierotti, F., Preston, R.J., Romagna, F., Shimada, H., Sutou, S., and Vannier, B. Report from the Working Group on the *In Vivo* Mammalian Bone Marrow Chromosomal Aberration Test. *Mutation Research*. 312, 305–312 (1994).

(5) Fielder, R.J., Allen, J.A., Boobis, A.R., Botham, P.A., Doe, J., Esdaile, D.J., Gatehouse, D.G., Hodson-Walker, G., Morton, D.B., Kirkland, D. J., and Richold, M. Report of British Toxicology Society/UK Environmental Mutagen Society Working Group: Dose Setting in *In Vivo* Mutagenicity Assays. *Mutagenesis.* 7, 313–319 (1992).

(6) Lovell, D.P., Anderson, D., Albanese, R., Amphlett, G.E., Clare, G., Ferguson, R., Richold, M., Papworth, D.G., and Savage, J.R.K. Ed. Kirkland,D. J. Statistical Analysis of *In Vivo* Cytogenetic Assays. UKEMS Sub-Committee on Guidelines for Mutagenicity Testing. Report Part III. Statistical Evaluation of Mutagenicity Test Data (Cambridge University Press, Cambridge, 1989) pp. 184–232.

(7) Locke-Huhle, C. Endoreduplication in Chinese Hamster Cells During Alpha-Radiation Induced G2 Arrest. *Mutation Research*. 119, 403–413 (1983).

(8) Huang, Y., Change, C., and Trosko, J. E. Aphidicolin-Induced Endoreduplication in Chinese Hamster Cells. *Cancer Research*. 43, 1362–1364 (1983).

[62 FR 43824, Aug. 15, 1997, as amended at 64 FR 35079, June 30, 1999]

§ 799.9539 TSCA mammalian erythrocyte micronucleus test.

(a) *Scope.* This section is intended to meet the testing requirements under section 4 of TSCA.

(1) The mammalian erythrocyte micronucleus test is used for the detection of damage induced by the test substance to the chromosomes or the mitotic apparatus of erythroblasts by analysis of erythrocytes as sampled in bone marrow and/or peripheral blood cells of animals, usually rodents.

(2) The purpose of the micronucleus test is to identify substances that cause cytogenetic damage which results in the formation of micronuclei containing lagging chromosome fragments or whole chromosomes.

(3) When a bone marrow erythroblast develops into a polychromatic erythrocyte, the main nucleus is extruded; any micronucleus that has been formed may remain behind in the otherwise anucleated cytoplasm. Visualization of micronuclei is facilitated in these cells because they lack a main nucleus. An increase in the frequency of micronucleated polychromatic erythrocytes in treated animals is an indication of induced chromosome damage.

(b) *Source.* The source material used in developing this TSCA test guideline is the OECD guideline 474 (February 1997). This source is available at the address in paragraph (g) of this section.

(c) *Definitions.* The following definitions apply to this section:

Centromere (kinetochore) is a region of a chromosome with which spindle fibers are associated during cell division, allowing orderly movement of daughter chromosomes to the poles of the daughter cells.

Micronuclei are small nuclei, separate from and additional to the main nuclei of cells, produced during telophase of mitosis (meiosis) by lagging chromosome fragments or whole chromosomes.

Normochromatic erythrocyte is a mature erythrocyte that lacks ribosomes and can be distinguished from immature, polychromatic erythrocytes by stains selective for ribosomes.

Polychromatic erythrocyte is a immature erythrocyte, in an intermediate stage of development, that still contains ribosomes and therefore can be distinguished from mature, normochromatic erythrocytes by stains selective for ribosomes.

(d) *Initial considerations.* (1) The bone marrow of rodents is routinely used in this test since polychromatic erythrocytes are produced in that tissue. The measurement of micronucleated immature (polychromatic) erythrocytes in peripheral blood is equally acceptable in any species in which the inability of the spleen

to remove micronucleated erythrocytes has been demonstrated, or which has shown an adequate sensitivity to detect agents that cause structural or numerical chromosome aberrations. Micronuclei can be distinguished by a number of criteria. These include identification of the presence or absence of a kinetochore or centromeric DNA in the micronuclei. The frequency of micronucleated immature (polychromatic) erythrocytes is the principal endpoint. The number of mature (normochromatic) erythrocytes in the peripheral blood that contain micronuclei among a given number of mature erythrocytes can also be used as the endpoint of the assay when animals are treated continuously for 4 weeks or more. This mammalian *in vivo* micronucleus test is especially relevant to assessing mutagenic hazard in that it allows consideration of factors of *in vivo* metabolism, pharmacokinetics and DNA-repair processes although these may vary among species, among tissues and among genetic endpoints. An *in vivo* assay is also useful for further investigation of a mutagenic effect detected by an *in vitro* system.

(2) If there is evidence that the test substance, or a reactive metabolite, will not reach the target tissue, it is not appropriate to use this test.

(e) *Test method*—(1) *Principle.* Animals are exposed to the test substance by an appropriate route. If bone marrow is used, the animals are sacrificed at appropriate times after treatment, the bone marrow extracted, and preparations made and stained (test techniques described in the references under paragraphs (g)(1), (g)(2), and (g)(3) of this section may be used). When peripheral blood is used, the blood is collected at appropriate times after treatment and smear preparations are made and stained (the test techniques described in the references under paragraphs (g)(3), (g)(4), (g)(5), and (g)(6) of this section may be used). For studies with peripheral blood, as little time as possible should elapse between the last exposure and cell harvest. Preparations are analyzed for the presence of micronuclei.

(2) *Description*—(i) *Preparations*—(A) *Selection of animal species.* Mice or rats are recommended if bone marrow is used, although any appropriate mammalian species may be used. When peripheral blood is used, mice are recommended. However, any appropriate mammalian species may be used provided it is a species in which the spleen does not remove micronucleated erythrocytes or a species which has shown an adequate sensitivity to detect agents that cause structural or numerical chromosome aberrations. Commonly used laboratory strains of young healthy animals should be employed. At the commencement of the study, the weight variation of animals should be minimal and not exceed ± 20% of the mean weight of each sex.

(B) *Housing and feeding conditions.* The temperature in the experimental animal room should be 22 °C ± 3 °C). Although the relative humidity should be at least 30% and preferably not exceed 70% other than during room cleaning, the aim should be 50–60%. Lighting should be artificial, the sequence being 12 hrs light, 12 hrs dark. For feeding, conventional laboratory diets may be used with an unlimited supply of drinking water. The choice of diet may be influenced by the need to ensure a suitable admixture of a test substance when administered by this route. Animals may be housed individually, or caged in small groups of the same sex.

(C) *Preparation of the animals.* Healthy young adult animals shall be randomly assigned to the control and treatment groups. The animals are identified uniquely. The animals are acclimated to the laboratory conditions for at least 5 days. Cages should be arranged in such a way that possible effects due to cage placement are minimized.

(D) *Preparation of doses.* Solid test substances shall be dissolved or suspended in appropriate solvents or vehicles and diluted, if appropriate, prior to dosing of the animals. Liquid test substances may be dosed directly or diluted prior to dosing. Fresh preparations of the test substance should be employed unless stability data demonstrate the acceptability of storage.

(ii) *Test conditions*—(A) *Solvent/vehicle.*The solvent/vehicle shall not produce toxic effects at the dose levels used, and shall not be suspected of

chemical reaction with the test substance. If other than well-known solvents/vehicles are used, their inclusion should be supported with reference data indicating their compatibility. It is recommended that wherever possible, the use of an aqueous solvent/vehicle should be considered first.

(B) *Controls.* (*1*) Concurrent positive and negative (solvent/vehicle) controls shall be included for each sex in each test. Except for treatment with the test substance, animals in the control groups should be handled in an identical manner to animals of the treatment groups.

(*2*) Positive controls shall produce micronuclei *in vivo* at exposure levels expected to give a detectable increase over background. Positive control doses should be chosen so that the effects are clear but do not immediately reveal the identity of the coded slides to the reader. It is acceptable that the positive control be administered by a route different from the test substance and sampled at only a single time. In addition, the use of chemical class-related positive control chemicals may be considered, when available. Examples of positive control substances include:

Chemical	CAS No.
Ethyl methanesulphonate	[CAS no. 62–50–0]
Ethyl nitrosourea	[CAS no. 759–73–9]
Mitomycin C	[CAS no. 50–07–7]
Cyclophosphamide (monohydrate)	[CAS no. 50–18–0] [CAS no. 6055–19–2]
Triethylenemelamine	[CAS no. 51–18–3]

(*3*) Negative controls, treated with solvent or vehicle alone, and otherwise treated in the same way as the treatment groups shall be included for every sampling time, unless acceptable interanimal variability and frequencies of cells with micronuclei are demonstrated by historical control data. If single sampling is applied for negative controls, the most appropriate time is the first sampling time. In addition, untreated controls should also be used unless there are historical or published control data demonstrating that no deleterious or mutagenic effects are induced by the chosen solvent/vehicle.

(*4*) If peripheral blood is used, a pretreatment sample may also be acceptable as a concurrent negative control, but only in the short peripheral blood studies (e.g., one to three treatment(s)) when the resulting data are in the expected range for the historical control.

(3) *Procedure*—(i) *Number and sex of animals.* Each treated and control group shall include at least 5 analyzable animals per sex (techniques described in the reference under paragraph (g)(7) of this section may be used). If at the time of the study there are data available from studies in the same species and using the same route of exposure that demonstrate that there are no substantial differences between sexes in toxicity, then testing in a single sex will be sufficient. Where human exposure to chemicals may be sex-specific, as for example with some pharmaceutical agents, the test should be performed with animals of the appropriate sex.

(ii) *Treatment schedule.* (A) No standard treatment schedule (i.e. one, two, or more treatments at 24 h intervals) can be recommended. The samples from extended dose regimens are acceptable as long as a positive effect has been demonstrated for this study or, for a negative study, as long as toxicity has been demonstrated or the limit dose has been used, and dosing continued until the time of sampling. Test substances may also be administered as a split dose, i.e., two treatments on the same day separated by no more than a few hrs, to facilitate administering a large volume of material.

(B) The test may be performed in two ways:

(*1*) Animals shall be treated with the test substance once. Samples of bone marrow shall be taken at least twice, starting not earlier than 24 hrs after treatment, but not extending beyond 48 hrs after treatment with appropriate interval(s) between samples. The use of sampling times earlier than 24 hrs after treatment should be justified. Samples of peripheral blood shall be taken at least twice, starting not earlier than 36 hrs after treatment, with appropriate intervals following the first sample, but not extending beyond 72 hrs. When a positive response is recognized at one sampling time, additional sampling is not required.

(*2*) If two or more daily treatments are used (e.g. two or more treatments

at 24 hr intervals), samples shall be collected once between 18 and 24 hrs following the final treatment for the bone marrow and once between 36 and 48 hrs following the final treatment for the peripheral blood (techniques described in the reference under paragraph (g)(8) of this section may be used).

(C) Other sampling times may be used in addition, when relevant.

(iii) *Dose levels.* If a range finding study is performed because there are no suitable data available, it shall be performed in the same laboratory, using the same species, strain, sex, and treatment regimen to be used in the main study (guidance on dose setting is provided in the reference in paragraph (g)(9) of this section). If there is toxicity, three dose levels shall be used for the first sampling time. These dose levels shall cover a range from the maximum to little or no toxicity. At the later sampling time only the highest dose needs to be used. The highest dose is defined as the dose producing signs of toxicity such that higher dose levels, based on the same dosing regimen, would be expected to produce lethality. Substances with specific biological activities at low non-toxic doses (such as hormones and mitogens) may be exceptions to the dose-setting criteria and should be evaluated on a case-by-case basis. The highest dose may also be defined as a dose that produces some indication of toxicity in the bone marrow (e.g. a reduction in the proportion of immature erythrocytes among total erythrocytes in the bone marrow or peripheral blood).

(iv) *Limit test.* If a test at one dose level of at least 2,000 mg/kg body weight using a single treatment, or as two treatments on the same day, produces no observable toxic effects, and if genotoxicity would not be expected based upon data from structurally related substances, then a full study using three dose levels may not be considered necessary. For studies of a longer duration, the limit dose is 2,000 mg/kg/body weight/day for treatment up to 14 days, and 1,000 mg/kg/body weight/day for treatment longer than 14 days. Expected human exposure may indicate the need for a higher dose level to be used in the limit test.

(v) *Administration of doses.* The test substance is usually administered by gavage using a stomach tube or a suitable intubation cannula, or by intraperitoneal injection. Other routes of exposure may be acceptable where they can be justified. The maximum volume of liquid that can be administered by gavage or injection at one time depends on the size of the test animal. The volume should not exceed 2 ml/100g body weight. The use of volumes higher than these must be justified. Except for irritating or corrosive substances which will normally reveal exacerbated effects with higher concentrations, variability in test volume should be minimized by adjusting the concentration to ensure a constant volume at all dose levels.

(vi) *Bone marrow/blood preparation.* Bone marrow cells shall be obtained from the femurs or tibias immediately following sacrifice. Cells shall be removed from femurs or tibias, prepared and stained using established methods. Peripheral blood is obtained from the tail vein or other appropriate blood vessel. Blood cells are immediately stained supravitally (the test techniques described in the references under paragraphs (g)(4), (g)(5), and (g)(6) of this section may be used) or smear preparations are made and then stained. The use of a DNA specific stain (e.g. acridine orange (techniques described in the reference under paragraph (g)(10) of this section may be used) or Hoechst 33258 plus pyronin-Y) can eliminate some of the artifacts associated with using a non-DNA specific stain. This advantage does not preclude the use of conventional stains (e.g., Giemsa). Additional systems (e.g. cellulose columns to remove nucleated cells (the test techniques described in the references under paragraph (g)(12) of this section may be used)) can also be used provided that these systems have been shown to adequately work for micronucleus preparation in the laboratory.

(vii) *Analysis.* The proportion of immature among total (immature = mature) erythrocytes is determined for each animal by counting a total of at least 200 erythrocytes for bone marrow and 1,000 erythrocytes for peripheral

blood (techniques described in the reference under paragraph (g)(13) of this section maybe used). All slides, including those of positive and negative controls, shall be independently coded before microscopic analysis. At least 2,000 immature erythrocytes per animal shall be scored for the incidence of micronucleated immature erythrocytes. Additional information may be obtained by scoring mature erythrocytes for micronuclei. When analyzing slides, the proportion of immature erythrocytes among total erythrocytes should not be less than 20% of the control value. When animals are treated continuously for 4 weeks or more, at least 2,000 mature erythrocytes per animal can also be scored for the incidence of micronuclei. Systems for automated analysis (image analysis) and cell suspensions (flow cytometry) are acceptable alternatives to manual evaluation if appropriately justified and validated.

(f) *Data and reporting*—(1) *Treatment of results.* Individual animal data shall be presented in tabular form. The experimental unit is the animal. The number of immature erythrocytes scored, the number of micronucleated immature erythrocytes, and the number of immature among total erythrocytes shall be listed separately for each animal analyzed. When animals are treated continuously for 4 weeks or more, the data on mature erythrocytes should also be given if it is collected. The proportion of immature among total erythrocytes and, if considered applicable, the percentage of micronucleated erythrocytes shall be given for each animal. If there is no evidence for a difference in response between the sexes, the data from both sexes may be combined for statistical analysis.

(2) *Evaluation and interpretation of results.* (i) There are several criteria for determining a positive result, such as a dose-related increase in the number of micronucleated cells or a clear increase in the number of micronucleated cells in a single dose group at a single sampling time. Biological relevance of the results should be considered first. Statistical methods may be used as an aid in evaluating the test results (the test techniques described in the references paragraphs (g)(14) and (g)(15) of this section may be used). Statistical significance should not be the only determining factor for a positive response. Equivocal results should be clarified by further testing preferably using a modification of experimental conditions.

(ii) A test substance for which the results do not meet the criteria in paragraph (f)(2)(i) of this section is considered non-mutagenic in this test.

(iii) Although most experiments will give clearly positive or negative results, in rare cases the data set will preclude making a definite judgement about the activity of the test substance. Results, may remain equivocal or questionable regardless of the number of times the experiment is repeated. Positive results in the micronucleus test indicate that a substance induces micronuclei which are the result of chromosomal damage or damage to the mitotic apparatus in the erythroblasts of the test species. Negative results indicate that, under the test conditions, the test substance does not produce micronuclei in the immature erythrocytes of the test species.

(iv) The likelihood that the test substance or its metabolites reach the general circulation or specifically the target tissue (e.g. systemic toxicity) should be discussed.

(3) *Test report.* The test report shall include the following information:

(i) Test substance:

(A) Identification data and CAS no., if known.

(B) Physical nature and purity.

(C) Physiochemical properties relevant to the conduct of the study.

(D) Stability of the test substance, if known.

(ii) Solvent/vehicle:

(A) Justification for choice of vehicle.

(B) Solubility and stability of the test substance in the solvent/vehicle, if known.

(iii) Test animals:

(A) Species/strain used.

(B) Number, age, and sex of animals.

(C) Source, housing conditions, diet, etc.

(D) Individual weight of the animals at the start of the test, including body

weight range, mean and standard deviation for each group.

(iv) Test conditions:

(A) Positive and negative (vehicle/solvent) control data.

(B) Data from range-finding study, if conducted.

(C) Rationale for dose level selection.

(D) Details of test substance preparation.

(E) Details of the administration of the test substance.

(F) Rationale for route of administration.

(G) Methods for verifying that the test substance reached the general circulation or target tissue, if applicable.

(H) Conversion from diet/drinking water test substance concentration parts per million (ppm) to the actual dose (mg/kg body weight/day), if applicable.

(I) Details of food and water quality.

(J) Detailed description of treatment and sampling schedules.

(K) Methods of slide preparation.

(L) Methods for measurement of toxicity.

(M) Criteria for scoring micronucleated immature erythrocytes.

(N) Number of cells analyzed per animal.

(O) Criteria for considering studies as positive, negative or equivocal.

(v) Results:

(A) Signs of toxicity.

(B) Proportion of immature erythrocytes among total erythrocytes.

(C) Number of micronucleated immature erythrocytes, given separately for each animal.

(D) Mean =± standard deviation of micronucleated immature erythrocytes per group.

(E) Dose-response relationship, where possible.

(F) Statistical analyses and method applied.

(G) Concurrent and historical negative control data.

(H) Concurrent positive control data.

(vi) Discussion of the results.

(vii) Conclusion.

(g) *References.* For additional background information on this test guideline, the following references should be consulted. These references are available for inspection at the TSCA Nonconfidential Information Center, Rm. NE–B607, Environmental Protection Agency, 401 M St., SW., Washington, DC, 12 noon to 4 p.m., Monday through Friday, except legal holidays.

(1) Heddle, J.A. A Rapid *In Vivo* Test for Chromosomal Damage. *Mutation Research*. 18, 187–190 (1973).

(2) Schmid, W. The Micronucleus Test. *Mutation Research*. 31, 9–15 (1975).

(3) Mavournin, K.H., Blakey, D.H., Cimino, M.C., Salamone, M.F., and Heddle, J.A. The *In Vivo* Micronucleus Assay in Mammalian Bone Marrow and Peripheral Blood. A report of the U.S. Environmental Protection Agency Gene-Tox Program. *Mutation Research*. 239, 29–80 (1990).

(4) Hayashi, M., Morita, T., Kodama, Y., Sofuni, T., and Ishidate, Jr., M. The Micronucleus Assay with Mouse Peripheral Blood Reticulocytes Using Acridine Orange–Coated Slides. *Mutation Research*. 245, 245–249 (1990).

(5) The Collaborative Study Group for the Micronucleus Test (1992). Micronucleus Test with Mouse Peripheral Blood Erythrocytes by Acridine Orange Supravital Staining: The Summary Report of the 5th Collaborative Study by CSGMT/JEMS. MMS. *Mutation Research*. 278, 83–98.

(6) The Collaborative Study Group for the Micronucleus Test (CSGMT/JEMMS.MMS, The Mammalian Mutagenesis Study Group of the Environmental Mutagen Society of Japan) Protocol recommended for the short-term mouse peripheral blood micronucleus test. *Mutagenesis*. 10, 153–159 (1995).

(7) Hayashi, M., Tice, R.R., MacGregor, J.T., Anderson, D., Blakey, D.H., Kirsch-Volders, M., Oleson, Jr. F.B., Pacchierotti, F., Romagna, F., Shimada, H., Sutou, S., and Vannier, B. *In Vivo* Rodent Erythrocyte Micronucleus Assay. *Mutation Research*. 312, 293–304 (1994).

(8) Higashikuni, N. and Sutou, S. An optimal, generalized sampling time of 30 =/- 6 h after double dosing in the mouse peripheral blood micronucleus test. *Mutagenesis*. 10, 313–319 (1995).

(9) Fielder, R.J., Allen, J.A., Boobis, A.R., Botham, P.A., Doe, J., Esdaile, D.J., Gatehouse, D.G., Hodson-Walker, G., Morton, D.B., Kirkland, D. J., and Richold, M. Report of British Toxicology Society/UK Environmental Mutagen Society Working Group: Dose Setting in *In Vivo* Mutagenicity Assays. *Mutagenesis*. 7, 313–319 (1992).

(10) Hayashi, M., Sofuni, T., and Ishidate, Jr., M. An Application of Acridine Orange Fluorescent Staining to the Micronucleus Test. *Mutation Research*. 120, 241–247 (1983).

(11) MacGregor, J.T., Wehr, C.M., and Langlois, R.G. A Simple Fluorescent Staining Procedure for Micronuclei and RNA in Erythrocytes Using Hoechst 33258 and

Pyronin Y. *Mutation Research*. 120, 269–275 (1983).

(12) Romagna, F. and Staniforth, C.D. The automated bone marrow micronucleus test. *Mutation Research*. 213, 91–104 (1989).

(13) Gollapudi, B. and McFadden, L.G. Sample size for the estimation of polychromatic to normochromatic eruthrocyte ratio in the bone marrow micronucleus test. *Mutation Research*. 347, 97–99 (1995).

(14) Richold, M., Ashby, J., Bootman, J., Chandley, A., Gatehouse, D.G., and Henderson, L. Ed. Kirkland, D.J. *In Vivo* Cytogenetics Assays. Basic Mutagenicity Tests, UKEMS Recommended Procedures. UKEMS Subcommittee on Guidelines for Mutagenicity Testing. Report. Part I revised (Cambridge University Press, Cambridge, New York, Port Chester, Melbourne, Sydney, 1990) pp. 115–141.

(15) Lovell, D.P., Anderson, D., Albanese, R., Amphlett, G.E., Clare, G., Ferguson, R., Richold, M., Papworth, D.G., and Savage, J.R.K. Ed. D.J. Kirkland. Statistical Analysis of *In Vivo* Cytogenetic Assays. Statistical Evaluation of Mutagenicity Test Data. UKEMS Sub-Committee on Guidelines for Mutagenicity Testing, Report, Part III. (Cambridge University Press, Cambridge, New York, Port Chester, Melbourne, Sydney, 1989) pp. 184–232.

(16) Heddle, J.A., Salamone, M.F., Hite, M., Kirkhart, B., Mavournin, K., MacGregor, J.G., and Newell, G.W. The Induction of Micronuclei as a Measure of Genotoxicity. *Mutation Research*. 123: 61–118 (1983).

(17) MacGregor, J.T., Heddle, J.A., Hite, M., Margolin, G.H., Ramel C., Salamone, M.F., Tice, R.R., and Wild, D. Guidelines for the Conduct of Micronucleus Assays in Mammalian Bone Marrow Erythrocytes. *Mutation Research*. 189: 103–112 (1987).

(18) MacGregor, J.T., Wehr, C.M., Henika, P.R., and Shelby, M.E. (1990). The *In Vivo* Erythrocyte Micronucleus Test: Measurement at Steady State Increases Assay Efficiency and Permits Integration with Toxicity Studies. *Fundamental Applied Toxicology*. 14: 513–522.

(19) MacGregor, J.T., Schlegel, R. Choy, W.N., and Wehr, C.M. Eds. Hayes, A.W., Schnell, R.C., and Miya, T.S. Micronuclei in Circulating Erythrocytes: A Rapid Screen for Chromosomal Damage During Routine Toxicity Testing in Mice. *Developments in Science and Practice of Toxicology* (Elsevier, Amsterdam, 1983) pp. 555–558.

[62 FR 43824, Aug. 15, 1997, as amended at 64 FR 35079, June 30, 1999]

§ 799.9620 TSCA neurotoxicity screening battery.

(a) *Scope.* This section is intended to meet the testing requirements under section 4 of TSCA. This neurotoxicity screening battery consists of a functional observational battery, motor activity, and neuropathology. The functional observational battery consists of noninvasive procedures designed to detect gross functional deficits in animals and to better quantify behavioral or neurological effects detected in other studies. The motor activity test uses an automated device that measures the level of activity of an individual animal. The neuropathological techniques are designed to provide data to detect and characterize histopathological changes in the central and peripheral nervous system. This battery is designed to be used in conjunction with general toxicity studies and changes should be evaluated in the context of both the concordance between functional neurological and neuropatholgical effects, and with respect to any other toxicological effects seen. This test battery is not intended to provide a complete evaluation of neurotoxicity, and additional functional and morphological evaluation may be necessary to assess completely the neurotoxic potential of a chemical.

(b) *Source.* The source material used in developing this TSCA test guideline is the OPPTS harmonized test guideline 870.6200 (June 1996 Public Draft). This source is available at the address in paragraph (g) of this section.

(c) *Definitions.* The following definitions apply to this section.

ED is effective dose.

Motor activity is any movement of the experimental animal.

Neurotoxicity is any adverse effect on the structure or function of the nervous system related to exposure to a chemical substance.

Toxic effect is an adverse change in the structure or function of an experimental animal as a result of exposure to a chemical substance.

(d) *Principle of the test method.* The test substance is administered to several groups of experimental animals, one dose being used per group. The animals are observed under carefully standardized conditions with sufficient frequency to ensure the detection and quantification of behavioral and/or neurologic abnormalities, if present. Various functions that could be affected by neurotoxicants are assessed

during each observation period. Measurements of motor activity of individual animals are made in an automated device. The animals are perfused and tissue samples from the nervous system are prepared for microscopic examination. The exposure levels at which significant neurotoxic effects are produced are compared to one another and to those levels that produce other toxic effects.

(e) *Test procedures*—(1) *Animal selection*—(i) *Species.* In general, the laboratory rat should be used. Under some circumstances, other species, such as the mouse or the dog, may be more appropriate, although not all of the battery may be adaptable to other species.

(ii) *Age.* Young adults (at least 42 days old for rats) shall be used.

(iii) *Sex.* Both males and females shall be used. Females shall be nulliparous and nonpregnant.

(2) *Number of animals.* At least 10 males and 10 females should be used in each dose and control group for behavioral testing. At least five males and five females should be used in each dose and control group for terminal neuropathology. If interim neuropathological evaluations are planned, the number should be increased by the number of animals scheduled to be perfused before the end of the study. Animals shall be randomly assigned to treatment and control groups.

(3) *Control groups.* (i) A concurrent (vehicle) control group is required. Subjects shall be treated in the same way as for an exposure group except that administration of the test substance is omitted. If the vehicle used has known or potential toxic properties, both untreated or saline treated and vehicle control groups are required.

(ii) Positive control data from the laboratory performing the testing shall provide evidence of the ability of the observational methods used to detect major neurotoxic endpoints including limb weakness or paralysis, tremor, and autonomic signs. Positive control data are also required to demonstrate the sensitivity and reliability of the activity-measuring device and testing procedures. These data should demonstrate the ability to detect chemically induced increases and decreases in activity. Positive control groups exhibiting central nervous system pathology and peripheral nervous system pathology are also required. Separate groups for peripheral and central neuropathology are acceptable (e.g. acrylamide and trimethyl tin). Permanently injurious substances need not be used for the behavioral tests. Historical data may be used if the essential aspects of the experimental procedure remain the same. Periodic updating of positive control data is recommended. New positive control data should also be collected when personnel or some other critical element in the testing laboratory has changed.

(4) *Dose level and dose selection.* At least three doses shall be used in addition to the vehicle control group. The data should be sufficient to produce a dose-effect curve. The Agency strongly encourage the use of equally spaced doses and a rationale for dose selection that will maximally support detection of dose-effect relations. For acute studies, dose selection may be made relative to the establishment of a benchmark dose (BD). That is, doses may be specified as successive fractions, e.g. 0.5, 0.25, ...n of the BD. The BD itself may be estimated as the highest nonlethal dose as determined in a preliminary range-finding lethality study. A variety of test methodologies may be used for this purpose, and the method chosen may influence subsequent dose selection. The goal is to use a dose level that is sufficient to be judged a limit dose, or clearly toxic.

(i) *Acute studies.* The high dose need not be greater than 2 g/kg. Otherwise, the high dose should result in significant neurotoxic effects or other clearly toxic effects, but not result in an incidence of fatalities that would preclude a meaningful evaluation of the data. This dose may be estimated by a BD procedure as described under paragraph (e)(4) of this section, with the middle and low dose levels chosen as fractions of the BD dose. The lowest dose should produce minimal effect, e.g. an ED10, or alternatively, no effects.

(ii) *Subchronic and chronic studies.* The high dose need not be greater than 1 g/kg. Otherwise, the high dose level

should result in significant neurotoxic effects or other clearly toxic effects, but not produce an incidence of fatalities that would prevent a meaningful evaluation of the data. The middle and low doses should be fractions of the high dose. The lowest dose should produce minimal effects, e.g. an ED10, or alternatively, no effects.

(5) *Route of exposure.* Selection of route may be based on several criteria including, the most likely route of human exposure, bioavailability, the likelihood of observing effects, practical difficulties, and the likelihood of producing nonspecific effects. For many materials, it should be recognized that more than one route of exposure may be important and that these criteria may conflict with one another. Initially only one route is required for screening for neurotoxicity. The route that best meets these criteria should be selected. Dietary feeding will generally be acceptable for repeated exposures studies.

(6) *Combined protocol.* The tests described in this screening battery may be combined with any other toxicity study, as long as none of the requirements of either are violated by the combination.

(7) *Study conduct*—(i) *Time of testing.* All animals shall be weighed on each test day and at least weekly during the exposure period.

(A) *Acute studies.* At a minimum, for acute studies observations and activity testing shall be made before the initiation of exposure, at the estimated time of peak effect within 8 hrs of dosing, and at 7 and 14 days after dosing. Estimation of times of peak effect may be made by dosing pairs of rats across a range of doses and making regular observations of gait and arousal.

(B) *Subchronic and chronic studies.* In a subchronic study, at a minimum, observations and activity measurements shall be made before the initiation of exposure and before the daily exposure, or for feeding studies at the same time of day, during the 4th, 8th, and 13th weeks of exposure. In chronic studies, at a minimum, observations and activity measurements shall be made before the initiation of exposure and before the daily exposure, or for feeding studies at the same time of day, every 3 months.

(ii) *Functional observational battery*—(A) *General conduct.* All animals in a given study shall be observed carefully by trained observers who are unaware of the animals' treatment, using standardized procedures to minimize observer variability. Where possible, it is advisable that the same observer be used to evaluate the animals in a given study. If this is not possible, some demonstration of interobserver reliability is required. The animals shall be removed from the home cage to a standard arena for observation. Effort should be made to ensure that variations in the test conditions are minimal and are not systematically related to treatment. Among the variables that can affect behavior are sound level, temperature, humidity, lighting, odors, time of day, and environmental distractions. Explicit, operationally defined scales for each measure of the battery are to be used. The development of objective quantitative measures of the observational end-points specified is encouraged. Examples of observational procedures using defined protocols may be found in the references under paragraphs (g)(5), (g)(6), and (g)(9) of this section. The functional observational battery shall include a thorough description of the subject's appearance, behavior, and functional integrity. This shall be assessed through observations in the home cage and while the rat is moving freely in an open field, and through manipulative tests. Testing should proceed from the least to the most interactive with the subject. Scoring criteria, or explicitly defined scales, should be developed for those measures which involve subjective ranking.

(B) *List of measures.* The functional observational battery shall include the following list of measures:

(*1*) Assessment of signs of autonomic function, including but not limited to:

(*i*) Ranking of the degree of lacrimation and salivation, with a range of severity scores from none to severe.

(*ii*) Presence or absence of piloerection and exophthalmus.

(*iii*) Ranking or count of urination and defecation, including polyuria and

diarrhea. This is most easily conducted during the open field assessment.

(*iv*) Pupillary function such as constriction of the pupil in response to light or a measure of pupil size.

(*v*) Degree of palpebral closure, e.g., ptosis.

(*2*) Description, incidence, and severity of any convulsions, tremors, or abnormal motor movements, both in the home cage and the open field.

(*3*) Ranking of the subject's reactivity to general stimuli such as removal from the cage or handling, with a range of severity scores from no reaction to hyperreactivity.

(*4*) Ranking of the subject's general level of activity during observations of the unperturbed subject in the open field, with a range of severity scores from unresponsive to hyperactive.

(*5*) Descriptions and incidence of posture and gait abnormalities observed in the home cage and open field.

(*6*) Ranking of any gait abnormalities, with a range of severity scores from none to severe.

(*7*) Forelimb and hindlimb grip strength measured using an objective procedure (the procedure described in the reference under paragraph (g)(8) of this section may be used).

(*8*) Quantitative measure of landing foot splay (the procedure described in the reference under paragraph (g)(3) of this section may be used).

(*9*) Sensorimotor responses to stimuli of different modalities will be used to detect gross sensory deficits. Pain perception may be assessed by a ranking or measure of the reaction to a tail-pinch, tail-flick, or hot-plate. The response to a sudden sound, e.g., click or snap, may be used to assess audition.

(*10*) Body weight.

(*11*) Description and incidence of any unusual or abnormal behaviors, excessive or repetitive actions (stereotypies), emaciation, dehydration, hypotonia or hypertonia, altered fur appearance, red or crusty deposits around the eyes, nose, or mouth, and any other observations that may facilitate interpretation of the data.

(C) *Additional measures.* Other measures may also be included and the development and validation of new tests is encouraged. Further information on the neurobehavioral integrity of the subject may be provided by:

(*1*) Count of rearing activity on the open field.

(*2*) Ranking of righting ability.

(*3*) Body temperature.

(*4*) Excessive or spontaneous vocalizations.

(*5*) Alterations in rate and ease of respiration, e.g., rales or dyspnea.

(*6*) Sensorimotor responses to visual or proprioceptive stimuli.

(iii) *Motor activity.* Motor activity shall be monitored by an automated activity recording apparatus. The device used must be capable of detecting both increases and decreases in activity, i.e., baseline activity as measured by the device must not be so low as to preclude detection of decreases nor so high as to preclude detection of increases in activity. Each device shall be tested by standard procedures to ensure, to the extent possible, reliability of operation across devices and across days for any one device. In addition, treatment groups must be balanced across devices. Each animal shall be tested individually. The test session shall be long enough for motor activity to approach asymptotic levels by the last 20% of the session for nontreated control animals. All sessions shall have the same duration. Treatment groups shall be counterbalanced across test times. Effort should be made to ensure that variations in the test conditions are minimal and are not systematically related to treatment. Among the variables which can affect motor activity are sound level, size and shape of the test cage, temperature, relative humidity, lighting conditions, odors, use of the home cage or a novel test cage, and environmental distractions.

(iv) *Neuropathology: Collection, processing and examination of tissue samples.* To provide for adequate sampling as well as optimal preservation of cellular integrity for the detection of neuropathological alterations, tissue shall be prepared for histological analysis using in situ perfusion and paraffin and/or plastic embedding procedures. Paraffin embedding is acceptable for tissue samples from the central nervous system. Plastic embedding of tissue samples from the central nervous system is encouraged, when

feasible. Plastic embedding is required for tissue samples from the peripheral nervous system. Subject to professional judgment and the type of neuropathological alterations observed, it is recommended that additional methods, such as glial fibrillary acidic protein (GFAP) immunohistochemistry and/or methods known as Bodian's or Bielchowsky's silver methods be used in conjunction with more standard stains to determine the lowest dose level at which neuropathological alterations are observed. When new or existing data provide evidence of structural alterations it is recommended that the GFAP immunoassay also be considered. A description of this technique can be found in the reference under paragraph (g)(10) of this section.

(A) *Fixation and processing of tissue.* The nervous system shall be fixed by in situ perfusion with an appropriate aldehyde fixative. Any gross abnormalities should be noted. Tissue samples taken should adequately represent all major regions of the nervous system. The tissue samples should be postfixed and processed according to standardized published histological protocols (protocols described in the references under paragraphs (g)(1), (g)(2), or (g)(11) of this section may be used). Tissue blocks and slides should be appropriately identified when stored. Histological sections should be stained for hematoxylin and eosin (H&E), or a comparable stain according to standard published protocols (some of these protocols are described in the references under paragraphs (g)(1) and (g)(11) of this section).

(B) *Qualitative examination.* Representative histological sections from the tissue samples should be examined microscopically by an appropriately trained pathologist for evidence of neuropathological alterations. The nervous system shall be thoroughly examined for evidence of any treatment-related neuropathological alterations. Particular attention should be paid to regions known to be sensitive to neurotoxic insult or those regions likely to be affected based on the results of functional tests. Such treatment-related neuropathological alterations should be clearly distinguished from artifacts resulting from influences other than exposure to the test substance. A stepwise examination of tissue samples is recommended. In such a stepwise examination, sections from the high dose group are first compared with those of the control group. If no neuropathological alterations are observed in samples from the high dose group, subsequent analysis is not required. If neuropathological alterations are observed in samples from the high dose group, samples from the intermediate and low dose groups are then examined sequentially.

(C) *Subjective diagnosis.* If any evidence of neuropathological alterations is found in the qualitative examination, then a subjective diagnosis shall be performed for the purpose of evaluating dose-response relationships. All regions of the nervous system exhibiting any evidence of neuropathological changes should be included in this analysis. Sections from all dose groups from each region will be coded and examined in randomized order without knowledge of the code. The frequency of each type and severity of each lesion will be recorded. After all samples from all dose groups including all regions have been rated, the code will be broken and statistical analysis performed to evaluate dose-response relationships. For each type of dose-related lesion observed, examples of different degrees of severity should be described. Photomicrographs of typical examples of treatment-related regions are recommended to augment these descriptions. These examples will also serve to illustrate a rating scale, such as 1=, 2=, and 3= for the degree of severity ranging from very slight to very extensive.

(f) *Data reporting and evaluation.* The final test report shall include the following information:

(1) *Description of equipment and test methods.* A description of the general design of the experiment and any equipment used shall be provided. This shall include a short justification explaining any decisions involving professional judgment.

(i) A detailed description of the procedures used to standardize observations, including the arena and scoring criteria.

(ii) Positive control data from the laboratory performing the test that demonstrate the sensitivity of the procedures being used. Historical data may be used if all essential aspects of the experimental protocol are the same. Historical control data can be critical in the interpretation of study findings. The Agency encourages submission of such data to facilitate the rapid and complete review of the significance of effects seen.

(2) *Results.* The following information shall be arranged by test group dose level.

(i) In tabular form, data for each animal shall be provided showing:

(A) Its identification number.

(B) Its body weight and score on each sign at each observation time, the time and cause of death (if appropriate), total session activity counts, and intrasession subtotals for each day measured.

(ii) Summary data for each group must include:

(A) The number of animals at the start of the test.

(B) The number of animals showing each observation score at each observation time.

(C) The mean and standard deviation for each continuous endpoint at each observation time.

(D) Results of statistical analyses for each measure, where appropriate.

(iii) All neuropathological observations shall be recorded and arranged by test groups. This data may be presented in the following recommended format:

(A) *Description of lesions for each animal.* For each animal, data must be submitted showing its identification (animal number, sex, treatment, dose, and duration), a list of structures examined as well as the locations, nature, frequency, and severity of lesions. Inclusion of photomicrographs is strongly recommended for demonstrating typical examples of the type and severity of the neuropathological alterations observed. Any diagnoses derived from neurological signs and lesions including naturally occurring diseases or conditions, should be recorded.

(B) *Counts and incidence of neuropathological alterations by test group.* Data should be tabulated to show:

(*1*) The number of animals used in each group and the number of animals in which any lesion was found.

(*2*) The number of animals affected by each different type of lesion, the locations, frequency, and average grade of each type of lesion.

(3) *Evaluation of data.* The findings from the screening battery should be evaluated in the context of preceding and/or concurrent toxicity studies and any correlated functional and histopathological findings. The evaluation shall include the relationship between the doses of the test substance and the presence or absence, incidence and severity, of any neurotoxic effects. The evaluation shall include appropriate statistical analyses, for example, parametric tests for continuous data and nonparametric tests for the remainder. Choice of analyses should consider tests appropriate to the experimental design, including repeated measures. There may be many acceptable ways to analyze data.

(g) *References.* For additional background information on this test guideline, the following references should be consulted. These references are available for inspection at the TSCA Nonconfidential Information Center, Rm. NE–B607, Environmental Protection Agency, 401 M St., SW., Washington, DC, 12 noon to 4 p.m., Monday through Friday, except legal holidays.

(1) Bennet, H.S. *et al.* Science and art in the preparing tissues embedded in plastic for light microscopy, with special reference to glycol methacrylate, glass knives and simple stains. *Stain Technology*. 51:71–97 (1976).

(2) Di Sant Agnese, P.A. and De Mesy Jensen, K. Dibasic staining of large epoxy sections and application to surgical pathology. *American Journal of Clinical Pathology*. 81:25–29 (1984).

(3) Edwards, P.M. and Parker, V.H. A simple, sensitive and objective method for early assessment of acrylamide neuropathy in rats. *Toxicology and Applied Pharmacology*. 40:589–591 (1977).

(4) Finger, F.W. Ed. Myers, R.D. Measuring Behavioral Activity. Vol. 2. *Methods in Psychobiology* (Academic, NY, 1972) pp.1–19.

(5) Gad, S. A neuromuscular screen for use in industrial toxicology. *Journal of Toxicology and Environmental Health*. 9:691–704 (1982).

(6) Irwin, S. Comprehensive observational assessment: Ia. A systematic quantitative

procedure for assessing the behavioral physiological state of the mouse. *Psychopharmacologia*. 13:222–257 (1968).

(7) Kinnard, E.J. and Watzman, N. Techniques utilized in the evaluation of psychotropic drugs on animals activity. *Journal of Pharmaceutical Sciences*. 55:995–1012 (1966).

(8) Meyer, O.A. *et al.* A method for the routine assessment of fore- and hindlimb grip strength of rats and mice. *Neurobehavioral Toxicology*. 1:233–236 (1979).

(9) Moser V.C. *et al.* Comparison of chlordimeform and carbaryl using a functional observational battery. *Fundamental and Applied Toxicology*. 11:189–206 (1988).

(10) O'Callaghan, J.P. Quantification of glial fibrillary acidic protein: Comparison of slot-immunobinding assays with a novel sandwich ELISA. *Neurotoxicology and Teratology*. 13:275–281 (1991).

(11) Pender, M.P. A simple method for high resolution light microscopy of nervous tissue. *Journal of Neuroscience Methods*. 15:213–218 (1985).

(12) Reiter, L.W. Use of activity measures in behavioral toxicology. *Environmental Health Perspectives*. 26:9–20 (1978).

(13) Reiter, L.W. and MacPhail, R.C. Motor activity: A survey of methods with potential use in toxicity testing. *Neurobehavorial Toxicology*. 1—Supplement. 1:53–66 (1979).

(14) Robbins, T.W. Eds. Iversen, L.L., Iverson, D.S., and Snyder, S.H. A critique of the methods available for the measurement of spontaneous motor activity. Vol 7. *Handbook of Psychopharmacology* (Plenum, NY, 1977) pp. 37–82.

[62 FR 43824, Aug. 15, 1997, as amended at 64 FR 35080, June 30, 1999]

§ 799.9630 TSCA developmental neurotoxicity.

(a) *Scope*—(1) *Applicability*. This section is intended to meet the testing requirements *under* section 4 of the Toxic Substances Control Act (TSCA).

(2) *Source*. The source material used in developing this TSCA test guideline is the OPPTS harmonized test guideline 870.6300 (August 1998).

(b) *Purpose*. In the assessment and evaluation of the toxic characteristics of a chemical substance or mixture (test substance), determination of the potential for developmental neurotoxicity is important. This study is designed to develop data on the potential functional and morphological hazards to the nervous system which may arise in the offspring from exposure of the mother during pregnancy and lactation.

(c) *Principle of the test method*. The test substance is administered to several groups of pregnant animals during gestation and early lactation, one dose level being used per group. Offspring are randomly selected from within litters for neurotoxicity evaluation. The evaluation includes observations to detect gross neurologic and behavioral abnormalities, determination of motor activity, response to auditory startle, assessment of learning, neuropathological evaluation, and brain weights. This protocol may be used as a separate study, as a followup to a standard developmental toxicity and/or adult neurotoxicity study, or as part of a two-generation reproduction study, with assessment of the offspring conducted on the second (F^2) generation.

(d) *Test procedure*—(1) *Animal selection*—(i) *Species and strain*. Testing must be performed in the rat. Because of its differences in timing of developmental events compared to strains that are more commonly tested in other developmental and reproductive toxicity studies, it is preferred that the Fischer 344 strain not be used. If a sponsor wishes to use the Fischer 344 rat or a mammalian species other than the rat, ample justification/reasoning for this selection must be provided.

(ii) *Age*. Young adult (nulliparous females) animals must be used.

(iii) *Sex*. Pregnant female animals must be used at each dose level.

(iv) *Number of animals*. (A) The objective is for a sufficient number of pregnant rats to be exposed to the test substance to ensure that an adequate number of offspring are produced for neurotoxicity evaluation. At least 20 litters are recommended at each dose level.

(B) On postnatal day 4, the size of each litter should be adjusted by eliminating extra pups by random selection to yield, as nearly as possible, four male and four females per litter. Whenever the number of pups of either sex prevents having four of each sex per litter, partial adjustment (for example, five males and three females) is permitted. Testing is not appropriate for litters of less than seven pups. Elimination of runts only is not appropriate. Individual pups should be identified

uniquely after standardization of litters. A method that may be used for identification can be found under paragraph (f)(1) of this section.

(v) *Assignment of animals for behavioral tests, brain weights, and neuropathological evaluations.* After standardization of litters, one male or one female from each litter (total of 10 males and 10 females per dose group) must be randomly assigned to one of the following tests: Motor activity, auditory startle, and learning and memory, in weanling and adult animals. On postnatal day 11, either 1 male or 1 female pup from each litter (total of 10 males and 10 females per dose group) must be sacrificed. Brain weights must be measured in all of these pups and, of these pups, six per sex per dose must be selected for neuropathological evaluation. At the termination of the study, either 1 male or 1 female from each litter (total of 10 males and 10 females per dose group) must be sacrificed and brain weights must be measured. An additional group of six animals per sex per dose group (one male or one female per litter) must be sacrificed at the termination of the study for neuropathological evaluation.

(2) *Control group.* A concurrent control group is required. This group must be a sham-treated group or, if a vehicle is used in administering the test substance, a vehicle control group. The vehicle must neither be developmentally toxic nor have effects on reproduction. Animals in the control group must be handled in an identical manner to test group animals.

(3) *Dose levels and dose selection.* (i) At least three dose levels of the test substance plus a control group (vehicle control, if a vehicle is used) must be used.

(ii) If the test substance has been shown to be developmentally toxic either in a standard developmental toxicity study or in a pilot study, the highest dose level must be the maximum dose which will not induce in utero or neonatal death or malformations sufficient to preclude a meaningful evaluation of neurotoxicity.

(iii) If a standard developmental toxicity study has not been conducted, the highest dose level, unless limited by the physicochemical nature or biological properties of the substance, must induce some overt maternal toxicity, but must not result in a reduction in weight gain exceeding 20 percent during gestation and lactation.

(iv) The lowest dose should not produce any grossly observable evidence of either maternal or developmental neurotoxicity.

(v) The intermediate doses must be equally spaced between the highest and lowest doses used.

(4) *Dosing period.* Day 0 of gestation is the day on which a vaginal plug and/or sperm are observed. The dosing period must cover the period from day 6 of gestation through day 10 postnatally. Dosing should not occur on the day of parturition in those animals who have not completely delivered their offspring.

(5) *Administration of the test substance.* The test substance or vehicle must be administered orally. Other routes of administration may be acceptable, on a case-by-case basis, with ample justification/reasoning for this selection. The test substance or vehicle must be administered based on the most recent weight determination.

(6) *Observation of dams.* (i) A gross examination of the dams must be made at least once each day before daily treatment.

(ii) Ten dams per group must be observed outside the home cage at least twice during the gestational dosing period (days 6–21) and twice during the lactational dosing period (days 1–10) for signs of toxicity. The animals must be observed by trained technicians who are unaware of the animals' treatment, using standardized procedures to maximize interobserver reliability. Where possible, it is advisable that the same observer be used to evaluate the animals in a given study. If this is not possible, some demonstration of interobserver reliability is required.

(iii) During the treatment and observation periods under paragraph (d)(6)(ii) of this section, observations must include:

(A) Assessment of signs of autonomic function, including but not limited to:

(*1*) Ranking of the degree of lacrimation and salivation, with a range of severity scores from none to severe.

(*2*) Presence or absence of piloerection and exophthalmus.

(*3*) Ranking or count of urination and defecation, including polyuria and diarrhea.

(*4*) Pupillary function such as constriction of the pupil in response to light or a measure of pupil size.

(*5*) Degree of palpebral closure, e.g., ptosis.

(B) Description, incidence, and severity of any convulsions, tremors, or abnormal movements.

(C) Description and incidence of posture and gait abnormalities.

(D) Description and incidence of any unusual or abnormal behaviors, excessive or repetitive actions (stereotypies), emaciation, dehydration, hypotonia or hypertonia, altered fur appearance, red or crusty deposits around the eyes, nose, or mouth, and any other observations that may facilitate interpretation of the data.

(iv) Signs of toxicity must be recorded as they are observed, including the time of onset, degree, and duration.

(v) Animals must be weighed at least weekly and on the day of delivery and postnatal days 11 and 21 (weaning) and such weights must be recorded.

(vi) The day of delivery of litters must be recorded and considered as postnatal day 0.

(7) *Study conduct*—(i) *Observation of offspring.* (A) All offspring must be examined cage-side at least daily for gross signs of mortality or morbidity.

(B) A total of 10 male offspring and 10 female offspring per dose group must be examined outside the cage for signs of toxicity on days 4, 11, 21, 35, 45, and 60. The offspring must be observed by trained technicians, who are unaware of the treatment being used, using standardized procedures to maximize interobserver reliability. Where possible, it is advisable that the same observer be used to evaluate the animals in a given study. If this is not possible, some demonstration of interobserver reliability is required. At a minimum, the end points outlined in paragraph (d)(6)(iii) of this section must be monitored as appropriate for the developmental stage being observed.

(C) Any gross signs of toxicity in the offspring must be recorded as they are observed, including the time of onset, degree, and duration.

(ii) *Developmental landmarks.* Live pups must be counted and each pup within a litter must be weighed individually at birth or soon thereafter, and on postnatal days 4, 11, 17, and 21 and at least once every 2 weeks thereafter. The age of vaginal opening and preputial separation must be determined. General procedures for these determinations may be found in paragraphs (f)(1) and (f)(11) of this section.

(iii) *Motor activity.* Motor activity must be monitored specifically on postnatal days 13, 17, 21, and 60 (+2 days). Motor activity must be monitored by an automated activity recording apparatus. The device must be capable of detecting both increases and decreases in activity, (i.e., baseline activity as measured by the device must not be so low as to preclude detection of decreases nor so high as to preclude detection of increases in activity). Each device must be tested by standard procedures to ensure, to the extent possible, reliability of operation across devices and across days for any one device. In addition, treatment groups must be balanced across devices. Each animal must be tested individually. The test session must be long enough for motor activity to approach asymptotic levels by the last 20 percent of the session for nontreated control animals. All sessions must have the same duration. Treatment groups must be counter-balanced across test times. Activity counts must be collected in equal time periods of no greater than 10 minutes duration. Efforts must be made to ensure that variations in the test conditions are minimal and are not systematically related to treatment. Among the variables that can affect motor activity are sound level, size and shape of the test cage, temperature, relative humidity, light conditions, odors, use of home cage or novel test cage, and environmental distractions. Additional information on the conduct of a motor activity study may be obtained in § 799.9620.

(iv) *Auditory startle test.* An auditory startle habituation test should be performed on the offspring around the time of weaning and around day 60. Day of testing should be

counterbalanced across treated and control groups. Details on the conduct of this testing may be obtained under paragraph (f)(1) of this section. In performing the auditory startle task, the mean response amplitude on each block of 10 trials (5 blocks of 10 trials per session on each day of testing) must be made. While use of prepulse inhibition is not a requirement, it is highly recommended. Details on the conduct of this test may be obtained in paragraph (f)(10) of this section.

(v) *Learning and memory tests.* A test of associative learning and memory should be conducted around the time of weaning and around day 60. Day of testing should be counterbalanced across treated and control groups. The same or separate tests may be used at these two stages of development. Some flexibility is allowed in the choice of tests for learning and memory in weanling and adult rats. However, the tests must be designed to fulfill two criteria. First, learning must be assessed either as a change across several repeated learning trials or sessions, or, in tests involving a single trial, with reference to a condition that controls for nonassociative effects of the training experience. Second, the tests must include some measure of memory (short-term or long-term) in addition to original learning (acquisition). If the tests of learning and memory reveal an effect of the test compound, it may be in the best interest of the sponsor to conduct additional tests to rule out alternative interpretations based on alterations in sensory, motivational, and/or motor capacities. In addition to the above two criteria, it is recommended that the test of learning and memory be chosen on the basis of its demonstrated sensitivity to the class of compound under investigation, if such information is available in the literature. In the absence of such information, examples of tests that could be made to meet the above criteria include: Delayed-matching-to-position, as described for the adult rat (see paragraph (f)(3) of this section) and for the infant rat (see paragraph (f)(9) of this section); olfactory conditioning, as described in paragraph (f)(13) of this section; and acquisition and retention of schedule-controlled behavior (see paragraphs (f)(4) and (f)(5) of this section). Additional tests for weanling rats are described under paragraphs (f)(20) and (f)(12) of this section, and for adult rats under paragraph (f)(16) of this section.

(vi) *Neuropathology.* Neuropathological evaluation must be conducted on animals on postnatal day 11 and at the termination of the study. At 11 days of age, one male or female pup must be removed from each litter such that equal numbers of male and female offspring are removed from all litters combined. Of these, six male and six female pups per dose group will be sacrificed for neuropathological analysis. The pups will be sacrificed by exposure to carbon dioxide and immediately thereafter the brains should be removed, weighed, and immersion-fixed in an appropriate aldehyde fixative. The remaining animals will be sacrificed in a similar manner and immediately thereafter their brains removed and weighed. At the termination of the study, one male or one female from each litter will be sacrificed by exposure to carbon dioxide and immediately thereafter the brain must be removed and weighed. In addition, six animals per sex per dose group (one male or female per litter) must be sacrificed at the termination of the study for neuropathological evaluation. Neuropathological analysis of animals sacrificed at the termination of the study must be performed in accordance with § 799.9620. Neuropathological evaluation of animals sacrificed on postnatal day 11 and at termination of the study must include a qualitative analysis and semiquantitative analysis as well as simple morphometrics.

(A) *Fixation and processing of tissue samples for postnatal day 11 animals.* Immediately following removal, the brain must be weighed and immersion fixed in an appropriate aldehyde fixative. The brains must be postfixed and processed according to standardized published histological protocols such as those discussed in references listed under paragraphs (f)(6), (f)(14), (f)(17), and (f)(21) of this section. Paraffin embedding is acceptable but plastic embedding is preferred and recommended.

Tissue blocks and slides must be appropriately identified when stored. Histological sections must be stained for hematoxylin and eosin, or a similar stain according to standard published protocols such as those discussed in references listed under paragraphs (f)(2), (f)(18), and (f)(23) of this section. For animals sacrificed at the termination of the study, methods for fixation and processing of tissue samples are provided in §799.9620(e)(7)(iv)(A).

(B) *Qualitative analysis.* The purposes of the qualitative examination are threefold—to identify regions within the nervous system exhibiting evidence of neuropathological alterations, to identify types of neuropathological alterations resulting from exposure to the test substance, and to determine the range of severity of the neuropathological alterations. Representative histological sections from the tissue samples should be examined microscopically by an appropriately trained pathologist for evidence of neuropathological alterations. The following stepwise procedure is recommended for the qualitative analysis. First, sections from the high dose group are compared with those of the control group. If no evidence of neuropathological alterations is found in animals of the high dose group, no further analysis is required. If evidence of neuropathological alterations are found in the high dose group, then animals from the intermediate and low dose group are examined. Subject to professional judgment and the kind of neuropathological alterations observed, it is recommended that additional methods such as Bodian's or Bielchowsky's silver methods and/or immunohistochemistry for glial fibrillary acid protein be used in conjunction with more standard stains to determine the lowest dose level at which neuropathological alterations are observed. Evaluations of postnatal day 11 pups is described in paragraphs (d)(7)(vi)(B)(*1*) and (d)(7)(vi)(B)(*2*) of this section. For animals sacrificed at the termination of the study, the regions to be examined and the types of alterations that must be assessed are identified in §799.9620(e)(7)(iv)(B).

(*1*) *Regions to be examined.* The brains should be examined for any evidence of treatment-related neuropathological alterations and adequate samples should be taken from all major brain regions (e.g., olfactory bulbs, cerebral cortex, hippocampus, basal ganglia, thalamus, hypothalamus, midbrain (tectum, tegmentum, and cerebral peduncles), brainstem and cerebellum) to ensure a thorough examination.

(*2*) *Types of alterations.* Guidance for neuropathological examination for indications of developmental insult to the brain can be found in paragraphs (f)(8) and (f)(22) of this section. In addition to more typical kinds of cellular alterations (e.g., neuronal vacuolation, degeneration, necrosis) and tissue changes (e.g., astrocytic proliferation, leukocytic infiltration, and cystic formation) particular emphasis should be paid to structural changes indicative of developmental insult including but not restricted to:

(*i*) Gross changes in the size or shape of brain regions such as alterations in the size of the cerebral hemispheres or the normal pattern of foliation of the cerebellum.

(*ii*) The death of neuronal precursors, abnormal proliferation, or abnormal migration, as indicated by pyknotic cells or ectopic neurons, or gross alterations in regions with active proliferative and migratory zones, alterations in transient developmental structures (e.g., the external germinal zone of the cerebellum, see paragraph (f)(15) of this section).

(*iii*) Abnormal differentiation, while more apparent with special stains, may also be indicated by shrunken and malformed cell bodies.

(*iv*) Evidence of hydrocephalus, in particular enlargement of the ventricles, stenosis of the cerebral aqueduct and general thinning of the cerebral hemispheres.

(C) *Subjective diagnosis.* If any evidence of neuropathological alterations is found in the qualitative examination, then a subjective diagnosis will be performed for the purpose of evaluating dose-response relationships. All regions of the brain exhibiting any evidence of neuropathological changes must be included in this analysis. Sections of each region from all dose groups will be coded as to treatment and examined in randomized order. The frequency of

each type and the severity of each lesion will be recorded. After all sections from all dose groups including all regions have been rated, the code will be broken and statistical analyses performed to evaluate dose-response relationships. For each type of dose related lesion observed, examples of different ranges of severity must be described. The examples will serve to illustrate a rating scale, such as 1+, 2+, and 3+ for the degree of severity ranging from very slight to very extensive.

(D) *Simple morphometric analysis.* Since the disruption of developmental processes is sometimes more clearly reflected in the rate or extent of growth of particular brain regions, some form of morphometric analysis must be performed on postnatal day 11 and at the termination of the study to assess the structural development of the brain. At a minimum, this would consist of a reliable estimate of the thickness of major layers at representative locations within the neocortex, hippocampus, and cerebellum. For guidance on such measurements see Rodier and Gramann under paragraph (f)(19) of this section.

(e) *Data collection, reporting, and evaluation.* The following specific information must be reported:

(1) *Description of test system and test methods.* A description of the general design of the experiment should be provided. This must include:

(i) A detailed description of the procedures used to standardize observations and procedures as well as operational definitions for scoring observations.

(ii) Positive control data from the laboratory performing the test that demonstrate the sensitivity of the procedures being used. These data do not have to be from studies using prenatal exposures. However, the laboratory must demonstrate competence in evaluation of effects in neonatal animals perinatally exposed to chemicals and establish test norms for the appropriate age group.

(iii) Procedures for calibrating and ensuring the equivalence of devices and the balancing of treatment groups in testing procedures.

(iv) A short justification explaining any decisions involving professional judgement.

(2) *Results.* The following information must be arranged by each treatment and control group:

(i) In tabular form, data for each animal must be provided showing:

(A) Its identification number and the litter from which it came.

(B) Its body weight and score on each developmental landmark at each observation time.

(C) Total session activity counts and intrasession subtotals on each day measured.

(D) Auditory startle response amplitude per session and intrasession amplitudes on each day measured.

(E) Appropriate data for each repeated trial (or session) showing acquisition and retention scores on the tests of learning and memory on each day measured.

(F) Time and cause of death (if appropriate); any neurological signs observed; a list of structures examined as well as the locations, nature, frequency, and extent of lesions; and brain weights.

(ii) The following data should also be provided, as appropriate:

(A) Inclusion of photomicrographs demonstrating typical examples of the type and extent of the neuropathological alterations observed is recommended.

(B) Any diagnoses derived from neurological signs and lesions, including naturally occurring diseases or conditions, should also be recorded.

(iii) Summary data for each treatment and control group must include:

(A) The number of animals at the start of the test.

(B) The body weight of the dams during gestation and lactation.

(C) Litter size and mean weight at birth.

(D) The number of animals showing each abnormal sign at each observation time.

(E) The percentage of animals showing each abnormal sign at each observation time.

(F) The mean and standard deviation for each continuous endpoint at each observation time. These will include body weight, motor activity counts,

auditory startle responses, performance in learning and memory tests, regional brain weights and whole brain weights (both absolute and relative).

(G) The number of animals in which any lesion was found.

(H) The number of animals affected by each different type of lesion, the location, frequency and average grade of each type of lesion for each animal.

(I) The values of all morphometric measurements made for each animal listed by treatment group.

(3) *Evaluation of data.* An evaluation of test results must be made. The evaluation must include the relationship between the doses of the test substance and the presence or absence, incidence, and extent of any neurotoxic effect. The evaluation must include appropriate statistical analyses. The choice of analyses must consider tests appropriate to the experimental design and needed adjustments for multiple comparisons. The evaluation must include the relationship, if any, between observed neuropathological and behavioral alterations.

(f) *References.* For additional background information on this test guideline, the following references should be consulted. These references are available for inspection at the TSCA Nonconfidential Information Center, Rm. NE–B607, Environmental Protection Agency, 401 M St., SW., Washington, DC, 12 noon to 4 p.m., Monday through Friday, except legal holidays.

(1) Adams, J., Buelke-Sam, J., Kimmel, C.A., Nelson, C.J., Reiter, L.W., Sobotka, T.J., Tilson, H.A., and Nelson, B.K. Collaborative behavioral teratolgy study: Protocol design and testing procedures.*Neurobehavioral Toxicology and Teratology* 7:579–586 (1985).

(2) Bennett, H.S., Wyrick, A.D., Lee, S.W., and McNeil, J.H. Science and art in preparing tissues embedded in plastic for light microscopy, with special reference to glycol methacrylate, glass knives and simple stains. *Stain Technology* 51:71–97 (1976).

(3) Bushnell, P.J. Effects of delay, intertrial interval, delay behavior and trimethyltin on spatial delayed response in rats. *Neurotoxicology and Teratology* 10:237–244 (1988).

(4) Campbell, B.A. and Haroutunian, V. Effects of age on long-term memory: Retention of fixed interval responding. *Journal of Gerontology* 36:338–341 (1981).

(5) Cory-Slechta, D.A., Weiss, B., and Cox, C. Delayed behavioral toxicity of lead with increasing exposure concentration. *Toxicology and Applied Pharmacology* 71:342–352 (1983).

(6) Di Sant Agnese, P. A. and De Mesy Jensen, K.L. Dibasic staining of large epoxy tissue sections and application to surgical pathology. *American Journal of Clinical Pathology* 81:25–29 (1984).

(7) U.S. Environmental Protection Agency. Neurotoxicity Screening Battery. In: Pesticide Assessment Guidelines, Subdivision F, Addendum 10. EPA 540/09–91–123. NTIS PB 91–154617 (1991).

(8) Friede, R. L. *Developmental Neuropathology*. Springer-Verlag, New York. pp. 1–23, 297–313, 326–351 (1975).

(9) Green, R.J. and Stanton, M.E. Differential ontogeny of working memory and reference memory in the rat. *Behavioral Neuroscience* 103:98–105 (1989).

(10) Ison, J.R. Reflex modification as an objective test for sensory processing following toxicant exposure. *Neurobehavioral Toxicology and Teratology* 6:437–445 (1984).

(11) Korenbrot, C.C., Huhtaniemi, I.T., and Weiner, R.I. Preputial separation as an external sign of pubertal development in the male rat. *Biology of Reproduction* 17:298–303 (1977).

(12) Krasnegor, N.A., Blass, E.M., Hofer, M.A., and Smotherman, W.P. (eds.) *Perinatal Development: A Psychobiological Perspective.* Academic Press, Orlando. pp.11–37, 145–167. (1987).

(13) Kucharski, D. and Spear, N.E. Conditioning of aversion to an odor paired with peripheral shock in the developing rat. *Developmental Psychobiology* 17:465–479 (1984).

(14) Luna, L. G. (editor). *Manual of Histologic Staining Methods of the Armed Forces Institute of Pathology*. (Third Edition). McGraw-Hill, New York. pp. 1–31 (1968).

(15) Miale, I. L. and Sidman, R.L. An autoradiographic analysis of histogenesis in the mouse cerebellum. *Experimental Neurology*. 4:277–296 (1961).

(16) Miller, D.B. and Eckerman, D.A. Learning and memory measures. In: *Neurobehavioral Toxicology*, Z. Annau (ed). Johns Hopkins University Press, Baltimore. pp. 94–149 (1986).

(17) Pender, M.P. A simple method for high resolution light microscopy of nervous tissue. *Journal of Neuroscience Methods.* 15:213–218 (1985).

(18) Ralis, H.M., Beesley, R.A., and Ralis, Z.A. *Techniques in Neurohistology*. Butterworths, London. pp. 57–145 (1973).

(19) Rodier, P.M. and Gramann, W.J. Morphologic effects of interference with cell proliferation in the early fetal period. *Neurobehavioral Toxicology* 1:129–135 (1979).

(20) Spear, N.E. and Campbell, B.A. (eds.) *Ontogeny of Learning and Memory*. Erlbaum, New Jersey. pp. 101–133, 157–224 (1979).

(21) Spencer, P.S., Bischoff, M.C., and Schaumburg, H.H. Neuropathological methods for the detection of neurotoxic disease. In: *Experimental and Clinical Neurotoxicology. Spencer, P.S. and Schaumburg, H.H. (eds.).* Williams and Wilkins, Baltimore. pp. 743–757 (1980).

(22) Suzuki, K. Special vulnerabilities of the developing nervous system to toxic substances. In: *Experimental and Clinical Neurotoxicology*. Spencer, P.S. and Schaumburg, H.H. (eds.). Williams and Wilkins, Baltimore. pp. 48–61 (1980). (23) Luna, L.G. (ed.). Manual of Histologic Staining Methods of the Armed Forces Institute of Pathology. (Third Edition). McGraw-Hill, New York. pp. 32–46 (1968).

[65 FR 78811, Dec. 15, 2000]

§ 799.9748 TSCA metabolism and pharmacokinetics

(a) *Scope.* (1) This section is intended to meet the testing requirements under section 4 of the Toxic Substances Control Act (TSCA). (1) Testing of the disposition of a test substance is designed to obtain adequate information on its absorption, distribution, biotransformation, and excretion and to aid in understanding the mechanism of toxicity. Basic pharmacokinetic parameters determined from these studies will also provide information on the potential for accumulation of the test substance in tissues and/or organs and the potential for induction of biotransformation as a result of exposure to the test substance. These data can be used to assess the adequacy and relevance of the extrapolation of animal toxicity data (particularly chronic toxicity and/or carcinogenicity data) to human risk assessment.

(2) Metabolism data can also be used to assist in determining whether animal toxicity studies have adequately addressed any toxicity concerns arising from exposure to plant metabolites, and in the setting of tolerances, if any, for those metabolites in raw agricultural commodities.

(b) *Source.* The source material used in developing this TSCA test guideline is the Office of Prevention, Pesticides and Toxic Substances (OPPTS) harmonized test guideline 870.7485 (August 1998, final guideline). This source is available at the address in paragraph (h) of this section.

(c) *Definitions.* The following definitions apply to this section.

Metabolism (biotransformation) is the sum of the processes by which a foreign chemical is subjected to chemical change by living organisms.

LOEL is the lowest observable effects level.

NOEL is the no observable effects level.

Pharmacokinetics is the quantitation and determination of the time course and dose dependency of the absorption, distribution, biotransformation, and excretion of chemicals.

(d) *Good laboratory practice standards.* The pharmacokinetics and metabolism tests outlined in this guideline must conform to the laboratory practices stipulated in 40 CFR Part 792—Good Laboratory Practice Standards.

(e) *Test Procedures.* Test procedures presented below utilize a tier system to minimize the use of resources and to allow flexibility in the conduct of metabolism studies. The proposed tier system consists of a basic data set (Tier 1) and additional studies (Tier 2). These additional studies may be requested based upon the existing toxicology data base and/or the results of Tier 1 testing which are found to impact upon the risk assessment process. For Tier 1 testing, the oral route will typically be required; however, if the use pattern results in other types of exposure, other routes (dermal and/or inhalation) may be required for initial testing of the disposition of a chemical substance. The registrant should justify the route of exposure to the Agency. Complete descriptions of the test procedures for these other routes of exposure can be found in paragraph (i) of this section. Except in unusual circumstances, the tiered approach to metabolism testing should apply to all listed routes of exposure.

(1) *Pilot studies.* The use of pilot studies is recommended and encouraged for the selection of experimental conditions for the pharmacokinetics and metabolism studies (mass balance, analytical procedures, dose-finding, excretion of CO_2, etc.).

(2) *Animal selection*—(i) *Species.* The rat must normally be used for testing because it has been used extensively for metabolic and toxicological studies. The use of other or additional species may be required if critical toxicology

studies demonstrate evidence of significant toxicity in these species or if metabolism is shown to be more relevant to humans in the test species.

(ii) *Strain.* Adult animals of the strain used or proposed to be used for the determination of adverse health effects associated with the test substance.

(3) *Material to be tested*—(i) *Test substance.* (A) A radiolabeled test substance using ^{14}C should be used for all material balance and metabolite identification aspects of the study. Other radioactive and stable isotopes may be used, particularly if the element is responsible for or is a part of the toxic portion of the compound. If it can be demonstrated that the material balance and metabolite identification requirements can be met using unlabeled test substance, then radiolabeled compound need not be used. If possible, the radiolabel should be located in a core portion of the molecule which is metabolically stable (it is not exchangeable, is not removed metabolically as CO_2, and does not become part of the one-carbon pool of the organism). Labeling of multiple sites of the molecule may be necessary to follow the metabolic fate of the compound.

(B) The label should follow the test compound and/or its major metabolites until excreted. The radiopurity of the radioactive test substance shall be the highest attainable for a particular test substance (ideally it should be greater than 95%) and reasonable effort should be made to identify impurities present at or above 2%. The purity, along with the identity of major impurities which have been identified, shall be reported. For other segments of the study, nonradioactive test substance may be used if it can be demonstrated that the analytical specificity and sensitivity of the method used with nonradioactive test substance is equal to or greater than that which could be obtained with the radiolabeled test substance. The radioactive and nonradioactive test substances shall be analyzed using an appropriate method to establish purity and identity. Additional guidance will be provided in chemical specific test rules to assist in the definition and specifications of test substances composed of mixtures and methods for determination of purity.

(ii) *Administration of test substance.* Test substance should be dissolved or suspended homogeneously in a vehicle usually employed for acute administration. A rationale for the choice of vehicle should be provided. The customary method of administration will be by oral gavage; however, administration by gelatin capsule or as a dietary mixture may be advantageous in specific situations. Verification of the actual dose administered to each animal should be provided.

(4) *Tier testing.* (i) The multiplicity of metabolic parameters that impact the outcome of toxicological evaluations preclude the use of a universal study design for routine toxicological evaluation of a test substance. The usefulness of a particular study design depends upon the biological activity of a compound and circumstances of exposure. For these reasons, a tiered system is proposed for evaluation of the metabolism/kinetic properties of a test substance.

(ii) The first tier data set is a definitive study by the appropriate route of exposure conducted in male rats to determine the routes and rate of excretion and to identify excreted metabolites. First tier data will also provide basic information for additional testing (Tier 2) if such testing is considered necessary. In the majority of cases, Tier 1 data are expected to satisfy regulatory requirements for biotransformation and pharmacokinetic data on test chemicals.

(iii) Second tier testing describes a variety of metabolism/kinetic experiments which address specific questions based on the existing toxicology data base and/or those results of Tier 1 testing impacting significantly on the risk assessment process. For conduct of these studies, individualized protocols may be necessary. Protocols for these studies, if required, can be developed as a cooperative effort between Agency and industry scientists.

(f) *Tier 1 data requirements (minimum data set).* At this initial level of testing, biotransformation and pharmacokinetic data from a single low dose group will be required. This study will

determine the rate and routes of excretion and the type of metabolites generated.

(1) *Number and sex of animals.* A minimum of four male young adult animals must be used for Tier 1 testing. The use of both sexes may be required in cases where there is evidence to support significant sex-related differences in toxicity.

(2) *Dose selection.* (i) A single dose is required for each route of exposure. The dose should be nontoxic, but high enough to allow for metabolite identification in excreta. If no other toxicity data are available for selection of the low dose, a dose identified as a fraction of the LD_{50} (as determined from acute toxicity studies) may be used. The magnitude of the dose used in Tier 1 studies should be justified in the final report.

(ii) For test substances of low toxicity a maximum dose of 1,000 mg/kg should be used; chemical-specific considerations may necessitate a higher maximum dose and will be addressed in specific test rules.

(3) *Measurements*—(i) *Excretion.* (A) Data obtained from this section (percent recovery of administered dose from urine, feces, and expired air) will be used to determine the rate and extent of excretion of test chemical, to assist in establishing mass balance, and will be used in conjunction with pharmacokinetic parameters to determine the extent of absorption. The quantities of radioactivity eliminated in the urine, feces, and expired air shall be determined separately at appropriate time intervals.

(B) If a pilot study has shown that no significant amount of radioactivity is excreted in expired air, then expired air need not be collected in the definitive study.

(C) Each animal must be placed in a separate metabolic unit for collection of excreta (urine, feces and expired air). At the end of each collection period, the metabolic units must be rinsed with appropriate solvent to ensure maximum recovery of radiolabel. Excreta collection must be terminated at 7 days, or after at least 90% of the administered dose has been recovered, whichever occurs first. The total quantities of radioactivity in urine must be determined at 6, 12, and 24 hours on day 1 of collection, and daily thereafter until study termination, unless pilot studies suggest alternate or additional time points for collection. The total quantities of radioactivity in feces should be determined on a daily basis beginning at 24 hours post-dose, and daily thereafter until study termination. The collection of CO_2 and other volatile materials may be discontinued when less than 1% of the administered dose is found in the exhaled air during a 24-hour collection period.

(ii) *Tissue distribution.* At the termination of the Tier 1 study, the following tissues should be collected and stored frozen: Liver, fat, gastrointestinal tract, kidney, spleen, whole blood, and residual carcass. If it is determined that a significant amount of the administered dose is unaccounted for in the excreta, then data on the percent of the total (free and bound) radioactive dose in these tissues as well as residual carcass will be requested. Additional tissues must be included if there is evidence of target organ toxicity from subchronic or chronic toxicity studies. For other routes of exposure, specific tissues may also be required, such as lungs in inhalation studies and skin in dermal studies. Certain techniques currently at various stages of development, e.g., quantitative whole-body autoradiography, may prove useful in determining if a test substance concentrates in certain organs or in determining a specific pattern of distribution within a given tissue. The use of such techniques is encouraged, but not required, and may be employed to limit the number of tissues collected to those shown to contain a measurable amount of radioactivity.

(iii) *Metabolism.* Excreta must be collected for identification and quantitation of unchanged test substance and metabolites as described in paragraph (f)(3)(i) of this section. Pooling of excreta to facilitate metabolite identification within a given dose group is acceptable. Profiling of metabolites from each time period is recommended. However, if lack of sample and/or radioactivity precludes this, pooling of urine as well as pooling of feces across

several time points is acceptable. Appropriate qualitative and quantitative methods must be used to assay urine, feces, and expired air from treated animals. Reasonable efforts should be made to identify all metabolites present at 5% or greater of the administered dose and to provide a metabolic scheme for the test chemical. Compounds which have been characterized in excreta as comprising 5% or greater of the administered dose should be identified. If identification at this level is not possible, a justification/explanation should be provided in the final report. Identification of metabolites representing less than 5% of the administered dose might be requested if such data are needed for risk assessment of the test chemical. Structural confirmation should be provided whenever possible. Validation of the methods used in metabolite identification should be included.

(g) *Tier 2 data requirements.* Studies at the Tier 2 level are designed to answer questions about the disposition of test chemicals based on the existing toxicology data base and/or results of Tier 1 testing which may have a significant impact on the risk assessment for the test chemical. Such studies may address questions regarding absorption, persistence, or distribution of the test chemical, or a definitive alteration in the metabolic profile occurring with dose which may be of toxicological concern. At the Tier 2 level, only those studies which address a specific concern are required, and if required must be conducted according to mutual agreement between the registrant and the Agency. Flexibility will be allowed in the design of specific experiments as warranted by technological advances in this field.

(1) *Absorption.* (i) If the extent of absorption cannot be established from Tier 1 studies, or where greater than 20% of the administered dose is present in feces, a study to determine the extent of absorption will be required. This can be accomplished either through intravenous administration of test material and measurement of radioactivity in excreta or after oral administration of test material and measurement of radioactivity in bile.

(ii) For the intravenous study, a single dose (not to exceed the oral dose used in Tier 1) of test chemical using an appropriate vehicle should be administered in a suitable volume (e.g., 1 mL/kg) at a suitable site to at least three male rats (both sexes might be used if warranted). The disposition of the test chemical should be monitored for oral dosing as outlined in paragraph (f)(3)(i) of this section. Metabolite identification will not be required for this study.

(iii) If a biliary excretion study is chosen the oral route of administration may be requested. In this study, the bile ducts of at least three male rats (or of both sexes, if warranted) should be appropriately cannulated and a single dose of the test chemical should be administered to these rats. Following administration of the test chemical, excretion of radioactivity in bile should be monitored as long as necessary to determine if a significant percentage of the administered dose is excreted via this route.

(2) *Tissue distribution time course.* (i) A time course of tissue distribution in selected tissues may be required to aid in the determination of a possible mode of toxic action. This concern may arise from evidence of extended half-life or possible accumulation of radioactivity in specific tissues. The selection of tissues for this type of study will be based upon available evidence of target organ toxicity and/or carcinogenicity, and the number of time points required will be based upon pharmacokinetic information obtained from Tier 1 data. Flexibility will be allowed in the selection of time points to be studied.

(ii) For this type of study, three rats per time point will be administered an appropriate oral dose of test chemical, and the time course of distribution monitored in selected tissues. Only one sex may be required, unless target organ toxicity is observed in sex-specific organs. Assessment of tissue distribution will be made using appropriate techniques for assessment of total amount distributed to tissue and for assessment of metabolite distribution.

(3) *Plasma kinetics.* The purpose of this experiment is to obtain estimates of basic pharmacokinetic parameters

(half-life, volume of distribution, absorption rate constant, area under the curve) for the test substance. Kinetic data may be required if the data can be used to resolve issues about bioavailability and to clarify whether clearance is saturated in a dose-dependent fashion. For this experiment a minimum of three rats per group is required. At least two doses will be required, usually the NOEL and LOEL from the critical toxicology study. Following administration of test substance, samples should be obtained from each animal at suitable time points appropriate sampling methodology. Total radioactivity present (or total amount of chemical, for nonradioactive materials) should be analyzed in whole blood and plasma using appropriate methods, and the blood/plasma ratio should be calculated.

(4) *Induction.* (i) Studies addressing possible induction of biotransformation may be requested under one or more of the following conditions:

(A) Available evidence indicates a relationship between induced metabolism and enhanced toxicity.

(B) The available toxicity data indicate a nonlinear relationship between dose and metabolism.

(C) The results of Tier 1 metabolite identification studies show identification of a potentially toxic metabolite.

(D) Induction can plausibly be invoked as a factor in such effects where status may depend on the level of inducible enzymes present. Several *in vivo* and *in vitro* methods are available for assessment of enzyme induction, and the experiments which best address the issue at hand can be determined between Agency and industry scientists. If induction is demonstrated, the relationship of this phenomenon to toxicity observed from subchronic and/or chronic toxicity studies will need to be addressed.

(ii) [Reserved]

(iii) If toxicologically significant alterations in the metabolic profile of the test chemical are observed through either *in vitro* or *in vivo* experiments, characterization of the enzyme(s) involved (for example, Phase I enzymes such as isozymes of the Cytochrome P450–dependent mono-oxygenase system, Phase II enzymes such as isozymes of sulfotransferase or uridine diphosphate glucuronosyl transferase, or any other relevant enzymes) may be requested. This information will help establish the relevance of the involved enzyme(s) to human risk, as it is known that certain isozymes are present in animal species which are not present in humans, and vice versa.

(5) *Physiologically-based modeling.* Traditional methods of modeling have been used to determine kinetic parameters associated with drug and xenobiotic disposition, but have assumed a purely mathematical construct of mammalian organisms in their operation. On the other hand, more recent models which take into account the physiological processes of the animal have been used with success in defining biological determinants of chemical disposition as well as the relationship between tissue dose and tissue response. These so-called physiologically-based models, also allow for cross-species extrapolation which is often necessary in the risk-assessment process. The use of physiologically-based modeling as an experimental tool for addressing specific issues related to biotransformation and pharmacokinetics of a test substance is encouraged. Information as derived from physiologically-based modeling experiments may aid in the comparison of biotransformation and pharmacokinetics of a test substance between animal species and humans, and in the assessment of risk under specific exposure conditions. At the discretion of the Agency, or by mutual agreement, results of physiologically based pharmacokinetic (PBPK) studies with parent compound may be submitted in lieu of other studies, if it is determined that such data would provide adequate information to satisfy this guideline.

(h) *Reporting of study results.* In addition to the reporting requirements specified under EPA Good Laboratory Practice Standards at 40 CFR part 792, subpart J, the completed study (Tier 1 or Tier 2) should be presented in the following format:

(1) *Title/cover page.* Title page and additional requirements (requirements for data submission, good laboratory practice, statements of data confidentiality claims and quality assurance) if

relevant to the study report, should precede the content of the study formatted below. These requirements are to be found in 40 CFR parts 790, 792, and 799.

(2) *Table of contents.* A concise listing must precede the body of the report, containing all essential elements of the study and the page and table number where the element is located in the final report of the study. Essential elements of the table of contents should include a summary, an introduction, the materials and methods section, results, discussion/conclusions, references, tables, figures, appendices, and key subsections as deemed appropriate. The table of contents should include the page number of each of these elements.

(3) *Body of the report.* The body of the report must include information required under this section, organized into sections and paragraphs as follows:

(i) *Summary.* This section of the study report must contain a summary and analysis of the test results and a statement of the conclusions drawn from the analysis. This section should highlight the nature and magnitude of metabolites, tissue residue, rate of clearance, bioaccumulation potential, sex differences, etc. The summary should be presented in sufficient detail to permit independent evaluation of the findings.

(ii) *Introduction.* This section of the report should include the objectives of the study, guideline references, regulatory history, if any, and a rationale.

(iii) *Materials and methods.* This section of the report must include detailed descriptions of all elements including:

(A) *Test substance.* (*1*) This section should include identification of the test substance—chemical name, molecular structure, qualitative and quantitative determination of its chemical composition, and type and quantities of any impurities whenever possible.

(*2*) This section should also include information on physical properties including physical state, color, gross solubility and/or partition coefficient, and stability.

(*3*) The type or description of any vehicle, diluents, suspending agents, and emulsifiers or other materials used in administering the test substance should be stated.

(*4*) If the test substance is radiolabeled, information on the following should be included in this subsection: The type of radionuclide, position of label, specific activity, and radiopurity.

(B) *Test animals.* This section should include information on the test animals, including: Species, strain, age at study initiation, sex, body weight, health status, and animal husbandry.

(C) *Methods.* This subsection should include details of the study design and methodology used. It should include a description of:

(*1*) How the dosing solution was prepared and the type of solvent, if any, used.

(*2*) Number of treatment groups and number of animals per group.

(*3*) Dosage levels and volume.

(*4*) Route of administration.

(*5*) Frequency of dosing.

(*6*) Fasting period (if used).

(*7*) Total radioactivity per animal.

(*8*) Animal handling.

(*9*) Sample collection.

(*10*) Sample handling.

(*11*) Analytical methods used for separation.

(*12*) Quantitation and identification of metabolites.

(*13*) Other experimental measurements and procedures employed (including validation of test methods for metabolite analysis).

(D) *Statistical analysis.* If statistical analysis is used to analyze the study findings, then sufficient information on the method of analysis and the computer program employed should be included so that an independent reviewer/statistician can reevaluate and reconstruct the analysis. Presentation of models should include a full description of the model to allow independent reconstruction and validation of the model.

(iv) *Results.* All data should be summarized and tabulated with appropriate statistical evaluation and placed in the text of this section. Radioactivity counting data should be summarized and presented as appropriate for the study, typically as disintegrations per minute and microgram or milligram equivalents, although other units

may be used. Graphic illustrations of the findings, reproduction of representative chromatographic and spectrometric data, and proposed metabolic pathways and molecular structure of metabolites should be included in this section. In addition the following information is to be included in this section if applicable:

(A) Justification for modification of exposure conditions, if applicable.

(B) Justification for selection of dose levels for pharmacokinetic and metabolism studies.

(C) Description of pilot studies used in the experimental design of the pharmacokinetic and metabolism studies, if applicable.

(D) Quantity and percent recovery of radioactivity in urine, feces, and expired air, as appropriate. For dermal studies, include recovery data for treated skin, skin washes, and residual radioactivity in the covering apparatus and metabolic unit as well as results of the dermal washing study.

(E) Tissue distribution reported as percent of administered dose and microgram equivalents per gram of tissue.

(F) Material balance developed from each study involving the assay of body tissues and excreta.

(G) Plasma levels and pharmacokinetic parameters after administration by the relevant routes of exposure.

(H) Rate and extent of absorption of the test substance after administration by the relevant routes of exposure.

(I) Quantities of the test substance and metabolites (reported as percent of the administered dose) collected in excreta.

(J) Individual animal data.

(v) *Discussion and conclusions.* (A) In this section the author(s) should:

(*1*) Provide a plausible explanation of the metabolic pathway for the test chemical.

(*2*) Emphasize species and sex differences whenever possible.

(*3*) Discuss the nature and magnitude of metabolites, rates of clearance, bioaccumulation potential, and level of tissue residues as appropriate.

(B) The author(s) should be able to derive a concise conclusion that can be supported by the findings of the study.

(vi) *Optional sections.* The authors may include additional sections such as appendices, bibliography, tables, etc.

(i) *Alternate routes of exposure for Tier 1 testing*—(1) *Dermal*—(i) *Dermal treatment.* One (or more if needed) dose levels of the test substance must be used in the dermal portion of the study. The low dose level should be selected in accordance with paragraph (f)(2) of this section. The dermal doses must be dissolved, if necessary, in a suitable vehicle and applied in a volume adequate to deliver the doses. Shortly before testing, fur is to be clipped from the dorsal area of the trunk of the test animals. Shaving may be employed, but it should be carried out approximately 24 hour before the test. When clipping or shaving the fur, care should be taken to avoid abrading the skin, which could alter its permeability. Approximately 10% of the body surface should be cleared for application of the test substance. With highly toxic substances, the surface area covered may be less than approximately 10%, but as much of the area as possible is to be covered with a thin and uniform film. The same nominal treatment surface area must be used for all dermal test groups. The dosed areas are to be protected with a suitable covering which is secured in place. The animals must be housed separately.

(ii) *Dermal washing study.* (A) A washing experiment must be conducted to assess the removal of the applied dose of the test substance by washing the treated skin area with a mild soap and water. A single dose must be applied to two animals in accordance with paragraph (f)(2) of this section. After application (2 to 5 minutes) the treated areas of the animals must be washed with a mild soap and water. The amounts of test substance recovered in the washes must be determined to assess the effectiveness of removal by washing.

(B) Unless precluded by corrosiveness, the test substance must be applied and kept on the skin for a minimum of 6 hours. At the time of removal of the covering, the treated area must be washed following the procedure as outlined in the dermal washing

study. Both the covering and the washes must be analyzed for residual test substance. At the termination of the studies, each animal must be sacrificed and the treated skin removed. An appropriate section of treated skin must be analyzed to determine residual radioactivity.

(2) *Inhalation.* A single (or more if needed) concentration of test substance must be used in this portion of the study. The concentration should be selected in accordance with paragraph (f)(2) of this section. Inhalation treatments are to be conducted using a ''nose-cone'' or ''head-only'' apparatus to prevent absorption by alternate routes of exposure. If other inhalation exposure conditions are proposed for use in a chemical-specific test rule, justification for the modification must be documented. A single exposure over a defined period must be used for each group—a typical exposure is 4–6 hours.

[65 FR 78815, Dec. 15, 2000]

§ 799.9780 TSCA immunotoxicity.

(a) *Scope.* This section is intended to meet the testing requirements under section 4 of TSCA. This section is intended to provide information on suppression of the immune system which might occur as a result of repeated exposure to a test chemical. While some information on potential immunotoxic effects may be obtained from hematology, lymphoid organ weights and histopathology (usually done as part of routine toxicity testing), there are data which demonstrate that these endpoints alone are not sufficient to predict immunotoxicity (Luster *et al.*, 1992, 1993 see paragraphs (j)(8) and (j)(9) of this section). Therefore, the tests described in this section are intended to be used along with data from routine toxicity testing, to provide more accurate information on risk to the immune system. The tests in this section do not represent a comprehensive assessment of immune function.

(b) *Source.* The source material used in developing this TSCA test guideline is the OPPTS harmonized test guideline 870.7800 (June 1996 Public Draft). This source is available at the address in paragraph (j) of this section.

(c) *Definitions.* The following definitions apply to this section.

Antibodies or immunoglobulins (Ig) are part of a large family of glycoprotein molecules. They are produced by B cells in response to antigens, and bind specifically to the eliciting antigen. The different classes of immunoglobulins involved in immunity are IgG, IgA, IgM, IgD, and IgE. Antibodies are found in extracellular fluids, such as serum, saliva, milk, and lymph. Most antibody responses are T cell-dependent, that is, functional T and B lymphocytes, as well as antigen-presenting cells (usually macrophages), are required for the production of antibodies.

Cluster of differentiation (CD) refers to molecules expressed on the cell surface. These molecules are useful as distinct CD molecules are found on different populations of cells of the immune system. Antibodies against these cell surface markers (e.g., CD4, CD8) are used to identify and quantitate different cell populations.

Immunotoxicity refers to the ability of a test substance to suppress immune responses that could enhance the risk of infectious or neoplastic disease, or to induce inappropriate stimulation of the immune system, thus contributing to allergic or autoimmune disease. This section only addresses potential immune suppression.

Natural Killer (NK) cells are large granular lymphocytes which non-specifically lyse cells bearing tumor or viral antigens. NK cells are up-regulated soon after infection by certain microorganisms, and are thought to represent the first line of defense against viruses and tumors.

T and B cells are lymphocytes which are activated in response to specific antigens (foreign substances, usually proteins). B cells produce antigen-specific antibodies (see the definition for ''antibodies or immunoglobulins''), and subpopulations of T cells are frequently needed to provide help for the antibody response. Other types of T cell participate in the direct destruction of cells expressing specific foreign (tumor or infectious agent) antigens on the cell surface.

(d) *Principles of the test methods.* (1) In order to obtain data on the functional responsiveness of major components of

the immune system to a T cell dependent antigen, sheep red blood cells (SRBC), rats and/or mice[1] shall be exposed to the test and control substances for at least 28 days.[2] The animals shall be immunized by intravenous or intraperitoneal injection of SRBCs approximately 4 days (depending on the strain of animal) prior to the end of the exposure. At the end of the exposure period, either the plaque forming cell (PFC) assay or an enzyme linked immunosorbent assay (ELISA) shall be performed to determine the effects of the test substance on the splenic anti-SRBC (IgM) response or serum anti-SRBC IgM levels, respectively.

(2) In the event the test substance produces significant suppression of the anti-SRBC response, expression of phenotypic markers for major lymphocyte populations (total T and total B), and T cell subpopulations (T helpers (CD^4) and T cytotoxic/suppressors (CD^8)), as assessed by flow cytometry, may be performed to determine the effects of the test substance on either splenic or peripheral-blood lymphocyte populations and T cell subpopulations. When this study is performed, the appropriate monoclonal antibodies for the species being tested should be used. If the test substance has no significant effect on the anti-SRBC assay, a functional test for NK cells may be performed to test for a chemical's effect on non-specific immunity.[3] For tests performed using cells or sera from blood (ELISA or flow cytometry), it is not necessary to destroy the animals, since immunization with SRBCs at 28 days is not expected to markedly affect the results of other assays included in subchronic or longer-term studies (these tests are discussed in the reference under paragraph (j)(7) of this section). The necessity to perform either a quantitative analysis of the effects of a chemical on the numbers of cells in major lymphocyte populations and T Cell subpopulations by flow cytometry, or a splenic NK cell activity assay to assess the effects of the test compound on non-specific immunity shall be determined on a case-by-case basis, depending upon the outcome of the anti-SRBC assay.

(e) *Limit test.* If a test at one dose level of at least 1,000 mg/kg body weight (or 2 mg/L for inhalation route of exposure) using the procedures described for this study produces no observable toxic effects or if toxic effects would not be expected based upon data of structurally related compounds, then a full study using three dose levels might not be necessary. Expected human exposure may indicate the need for a higher dose level.

(f) *Test procedures*—(1) *Animal selection*—(i) *Species and strain.* These tests are intended for use in rats and/or mice. Commonly used laboratory strains shall be employed.[4] All test animals shall be free of pathogens, internal and external parasites. Females shall be nulliparous and nonpregnant. The species, strain, and source of the animals shall be identified.

(ii) *Age/weight.* (A) Young, healthy animals shall be employed. At the commencement of the study, the weight variation of the animals used shall not exceed ± 20% of the mean weight for each sex.

(B) Dosing shall begin when the test animals are between 6 and 8 weeks old.

(iii) *Sex.* Either sex may be used in the study; if one sex is known or believed to be more sensitive to the test compound, then that sex shall be used.

(iv) *Numbers.* (A) At least eight animals shall be included in each dose and control group. The number of animals tested shall yield sufficient statistical power to detect a 20% change based upon the interanimal variation which may be encountered in these assays.

[1] If absorption/distribution/metabolism/excretion (ADME) data are similar between species, then either rats or mice may be used for the test compound in question. If such data are lacking, both species should be used.

[2] Because there is a fairly rapid turnover of many of the cells in the immune system, 28 days is considered sufficient for the purposes of the anti-SRBC tests.

[3] When these optional tests are included, the phenotypic or NK cell analyses may be performed at 28 days of exposure, or at a later timepoint if ADME data suggest that a longer exposure is more appropriate.

[4] The study director shall be aware of strain differences in response to SRBC. For example, if the $B_6C_3F_1$ hybrid mouse is used in the PFC assay, a response of 800–1,000 PFC/10^6 spleen cells in control mice should be the minimally acceptable PFC response.

(B) To avoid bias, the use of adequate randomization procedures for the proper allocation of animals to test and control groups is required.

(C) Each animal shall be assigned a unique identification number. Dead animals, their preserved organs and tissues, and microscopic slides shall be identified by reference to the animal's unique number.

(v) *Husbandry.* (A) Animals may be group-caged by sex, but the number of animals per cage shall not interfere with clear observation of each animal. The biological properties of the test substance or toxic effects (e.g., morbidity, excitability) may indicate a need for individual caging.

(B) The temperature of the experimental animal rooms shall be at 22 ± 3 °C.

(C) The relative humidity of the experimental animal rooms shall be between 30 and 70%.

(D) Where lighting is artificial, the sequence shall be 12 hrs light, 12 hrs dark.

(E) Control and test animals shall be maintained on the same type of bedding and receive feed from the same lot. The feed shall be analyzed to assure adequacy of nutritional requirements of the species tested and for impurities that might influence the outcome of the test. Rodents shall be fed and watered *ad libitum* with food replaced at least weekly.

(F) The study shall not be initiated until the animals have been allowed an adequate period of acclimatization or quarantine to environmental conditions. The period of acclimatization shall be at least 1 week in duration.

(2) *Control and test substances.* (i) The test substance shall be dissolved or suspended in a suitable vehicle. Ideally, if a vehicle or diluent is needed, it shall not elicit toxic effects or substantially alter the chemical or toxicological properties of the test substance. It is recommended that an aqueous solution should be used. If solubility is a problem a solution in oil may be used. Other vehicles may be considered, but only as a last resort.

(ii) One lot of the test substance shall be used, if possible, throughout the duration of the study, and the research sample shall be stored under conditions that maintain its purity and stability. Prior to the initiation of the study, there shall be a characterization of the test substance, including the purity of the test compound and if technically feasible, the name and quantities of any known contaminants and impurities.

(iii) If the test or positive control substance is to be incorporated into feed or another vehicle, the period during which the test substance is stable in such a mixture shall be determined prior to the initiation of the study. Its homogeneity and concentration shall also be determined prior to the initiation of the study and periodically during the study. Statistically randomized samples of the mixture shall be analyzed to ensure that proper mixing, formulation, and storage procedures are being followed, and that the appropriate concentration of the test or control substance is contained in the mixture.

(3) *Control groups.* (i) A concurrent, vehicle-treated control group is required.

(ii) A separate untreated control group is required if the toxicity of the vehicle is unknown.

(iii) A positive control group with a known immunosuppressant (e.g., cyclophosphamide) shall be included in the study. A group of at least eight animals shall be given the immunosuppressive chemical.

(4) *Dose levels.* (i) In repeated-dose toxicity tests, it is desirable to have a dose-response relationship and a no observed immunotoxic effect level. Therefore, at least three dose levels and a negative control shall be used, unless a limit test is performed as specified under paragraph (e) of this section.

(ii) The highest dose level shall not produce significant stress, malnutrition, or fatalities, but ideally should produce some measurable sign of general toxicity (e.g., a 10% loss of body weight).

(iii) The lowest dose level ideally shall not produce any evidence of immunotoxicity.

(5) *Administration of the test substance.* (i) The test substance, vehicle, or positive control substance shall be administered for at least 28 days for the anti-

SRBC assay. The route of administration of the test material will usually be oral; however, this shall be determined by the likely route of occupational or indoor exposure. Therefore, under certain conditions, the dermal or inhalation route of exposure may be more relevant for the study. All animals shall be dosed by the same method during the entire experimental period.

(ii) If the test substance is administered by gavage, the animals are dosed with the test substance ideally on a 7-days-per-week basis. However, based primarily on practical considerations, dosing by gavage on a 5-days-per-week basis shall be acceptable. If the test substance is administered in the drinking water, or mixed directly into the diet, then exposure shall be on a 7-days-per-week basis.

(A) For substances of low toxicity, it is important to ensure that when administered in the diet, the quantities of the test substance involved do not interfere with normal nutrition. When the test substance is administered in the diet, either a constant dietary concentration in parts per million (ppm) or a constant dose level in terms of the animal's body weight shall be used; the alternative used should be specified.

(B) For a substance administered by gavage, the dose shall be given at approximately the same time each day, and adjusted at intervals (weekly for mice, twice per week for rats) to maintain a constant dose level in terms of the animal's body weight.

(iii) If the test substance is administered dermally, use paragraphs (f)(5)(iii)(A) through (f)(5)(iii)(D) of this section.

(A) *Dose levels and dose selection.* (*1*) In this test, it is desirable to determine a dose-response relationship as well as a NOEL. Therefore, at least three dose levels plus a control and, where appropriate, a vehicle control (corresponding to the concentration of vehicle at the highest dose level) group should be used. Doses should be spaced appropriately to produce test groups with a range of toxic effects. The data should be sufficient to produce a dose-response curve.

(*2*) The highest dose level should elicit signs of toxicity but not produce severe skin irritation or an incidence of fatality which would prevent a meaningful evaluation. If application of the test substance produces severe skin irritation, the concentration may be reduced, although this may result in a reduction in, or absence of, other toxic effects at the high dose level. If the skin has been badly damaged early in the study, it may be necessary to terminate the study and undertake a new one at lower concentrations.

(*3*) The intermediate dose levels should be spaced to produce a gradation of toxic effects.

(*4*) The lowest dose level should not produce any evidence of toxic effects.

(B) *Preparation of animal skin.* Shortly before testing, fur should be clipped from not less than 10% of the body surface area for application of the test substance. In order to dose approximately 10% of the body surface, the area starting at the scapulae (shoulders) to the wing of the ileum (hipbone) and half-way down the flank on each side of the animal should be shaved. Shaving should be carried out approximately 24 hrs before dosing. Repeated clipping or shaving is usually needed at approximately weekly intervals. When clipping or shaving the fur, care should be taken to avoid abrading the skin which could alter its permeability.

(C) *Preparation of test substance.* (*1*) Liquid test substances are generally used undiluted, except as indicated in paragraph (f)(5)(iii)(A)*(2)* of this section.

(*2*) Solids should be pulverized when possible. The substance should be moistened sufficiently with water or, when necessary, a suitable vehicle to ensure good contact with the skin. When a vehicle is used, the influence of the vehicle on toxicity of, and penetration of the skin by, the test substance should be taken into account.

(*3*) The volume of application should be kept constant, e.g. less than 300 <greek-m≤L for the rat; different concentrations of test solution should be prepared for different dose levels.

(D) *Administration of test substance.* (*1*) The duration of exposure should be at least for 90 days.

(*2*) The animals should be treated with test substance for at least 6 hrs/day on a 7-day per week basis. However, based on practical considerations,

application on a 5-day per week basis is acceptable. Dosing should be conducted at approximately the same time each day.

(*3*) The test substance should be applied uniformly over the treatment site.

(*4*) The surface area covered may be less for highly toxic substances. As much of the area should be covered with as thin and uniform a film as possible.

(*5*) During the exposure period, the test substance should be held in contact with the skin with a porous gauze dressing. The test site should be further covered with nonirritating tape to retain the gauze dressing and the test substance and to ensure that the animals cannot ingest the test substance. Restrainers may be used to prevent the ingestion of the test substance, but complete immobilization is not recommended.

(iv) If the test substance is administered by the inhalation route, use the procedures under paragraphs (e)(2), (e)(3), (e)(6), (e)(8), (e)(9), and (e)(10) of 40 CFR 799.9346. The exposure time for the anti-SRBC test shall be at least 28 days.

(6) *Observation period.* Duration of the observation period shall be at least 28 days.

(7) *Observation of animals.* (i) Observations shall be made at least once each day for morbidity and mortality. Appropriate actions shall be taken to minimize loss of animals to the study (e.g., necropsy of those animals found dead and isolation or euthanasia of weak or moribund animals).

(ii) A careful clinical examination shall be made at least once a week. Observations shall be detailed and carefully recorded, preferably using explicitly defined scales. Observations shall include, but not be limited to: evaluation of skin and fur, eyes and mucous membranes; respiratory and circulatory effects; autonomic effects, such as salivation; central nervous system effects, including tremors and convulsions, changes in the level of motor activity, gait and posture, reactivity to handling or sensory stimuli, grip strength, and stereotypes or bizarre behavior (e.g., self-mutilation, walking backwards).

(iii) Signs of toxicity shall be recorded as they are observed, including the time of onset, degree and duration.

(iv) Food and water consumption shall be determined weekly.

(v) Animals shall be weighed immediately prior to dosing, weekly (twice per week for rats) thereafter, and just prior to euthanasia.

(vi) Any moribund animals shall be removed and euthanized when first noticed. Necropsies shall be conducted on all moribund animals, and on all animals that die during the study.

(vii) The spleen and thymus shall be weighed in all animals at the end of the study.

(g) *Immunotoxicity tests*—(1) *Functional tests.* Either a splenic PFC assay or an ELISA shall be used to determine the response to antigen administration.

(i) *Antibody plaque-forming cell (PFC) assay.* If the antibody PFC assay is performed, the criteria listed under paragraphs (g)(1)(i)(A) through (g)(1)(i)(F) of this section shall be adhered to. Assays described in the references under paragraphs (j)(2) and (j)(4) of this section may be used.

(A) The T cell-dependent antigen, SRBC, shall be injected intravenously or intraperitoneally, usually at 24 days after the first dosing with the test substance.[5] Although the optimum response time is usually 4 days after immunization, some strains of test animal may deviate from this time point. The strain to be used shall be evaluated for the optimum day for PFC formation after immunization.

(B) The activity of each new batch of complement shall be determined. For any given study, the SRBCs shall be from a single sheep, or pool of sheep, for which the shelf life and dose for optimum response has been determined.

(C) Modifications of the PFC assay described in paragraph (g)(1)(i) of this section exist and may prove useful; however, the complete citation shall be

[5] If the SRBCs are administered by the intraperitoneal route, the study director should be aware that a low percentage of animals may not respond because the antigen was accidentally injected into the intestinal tract.

made for the method used, any modifications to the method shall be reported, and the source and, where appropriate, the activity or purity of important reagents shall be given. Justification or rationale shall be provided for each protocol modification. Discussions of modifications of the PFC assay are available in the references under paragraphs (j)(5),(j)(6), and (j)(10) of this section

(D) Samples shall be randomized and shall be coded for PFC analysis, so that the analyst is unaware of the treatment group of each sample examined.

(E) Spleen cell viability shall be determined.

(F) The numbers of IgM PFC per spleen, and the number of IgM PFC per 10^6 spleen cells shall be reported.

(ii) *Immunoglobulin quantification.* As an alternative to a PFC assay, the effects of the test substance on the antibody response to antigen may be determined by an Enzyme-Linked Immunosorbent Assay (ELISA). Comparison between the PFC and ELISA assays for immunotoxicity assessment are discussed in the references under paragraphs (j)(5), (j)(6), and (j)(10) of this section. Test animals shall be immunized with SRBCs as for the PFC assay. IgM titers in the serum of each test animal shall be determined (usually 4 days after immunization). As with the PFC assay, the optimum dose of SRBCs and optimum time for collection of the sera shall be determined for the species and strain of animal to be tested. Several methods are described in the reference under paragraph (j)(11) of this section).

(iii) *Natural killer (NK) cell activity.* The methods described in the reference under paragraph (j)(3) of this section may be used to demonstrate the effects of at least 28 days of exposure to a test substance on spontaneous cytotoxic activity. In this assay, splenocytes from treated and untreated test animals are incubated with ^{51}Cr-labeled YAC-1 lymphoma cells. The amount of radiolabel released from the target cells after incubation with the effector cells for four hrs is used as a measure of NK cytolysis. The following points shall be adhered to when using the NK cell assay:

(A) Assay controls shall be included to account for spontaneous release of radiolabel from target cells in the absence of effector cells, and also for the determination of total release of radiolabel.

(B) Target cells other than YAC-1 lymphoma cells may be appropriate for use in the assay. In all cases, target cell viability shall be determined.

(C) Modifications of the protocol exist that may prove useful. However, complete citation shall be made to the method used. Modifications shall be reported, and where appropriate, the source, activity, and/or purity of the reagents should be given. Justification or rationale shall be provided for each protocol modification.

(2) *Enumeration of splenic or peripheral blood total B cells, total T cells, and T cell subpopulations.* The phenotypic analysis of total B cell, total T cell, and T cell subpopulations from the spleen or peripheral blood by flow cytometry should be performed after at least 28 days of dosing; this may be performed at a later timepoint, if ADME data suggest that a longer exposure is more appropriate. If an exposure period longer than 28 days is used, then these tests may be performed in conjunction with subchronic (ninety day oral, dermal, or inhalation) toxicity studies, when these studies are required. Methods described in the references under paragraphs (j)(1) and (j)(5) of this section may be used.

(h) *Data and reporting*—(1) *Treatment of results*—(i) Data shall be summarized in tabular form, showing for each test group the number of animals at the start of the test, the number of animals showing effects, the types of effects and the percentage of animals displaying each type of effect.

(ii) All observed results, quantitative and incidental, shall be evaluated by an appropriate statistical method. Any generally accepted statistical methods may be used; the statistical methods including significance criteria shall be selected during the design of the study.

(2) *Evaluation of study results.* The findings of an immunotoxicity study shall be evaluated in conjunction with the findings of preceding studies and considered in terms of other toxic effects. The evaluation shall include the

relationship between the dose of the test substance and the presence or absence, and the incidence and severity of abnormalities, including behavioral and clinical abnormalities, gross lesions, identified target organs, body weight changes, effects on mortality and any other general or specific toxic effects. A properly conducted test shall provide a satisfactory estimation of a no-observed-effect level. It may indicate the need for an additional study and provide information on the selection of dose levels.

(3) *Test report.* In addition to the reporting requirements as specified under 40 CFR part 792, subpart J, the following specific information shall be reported. Both individual and summary data should be presented.

(i) The test substance characterization shall include:

(A) Chemical identification.

(B) Lot or batch number.

(C) Physical properties.

(D) Purity/impurities.

(E) Identification and composition of any vehicle used.

(ii) The test system shall contain data on:

(A) Species, strain, and rationale for selection of animal species, if other than that recommended.

(B) Age, body weight data, and sex.

(C) Test environment including cage conditions, ambient temperature, humidity, and light/dark periods.

(D) When inhalation is the route of exposure, a description of the exposure equipment and data shall be included as follows:

(1) Description of test conditions; the following exposure conditions shall be reported:

(*i*) Description of exposure apparatus including design, type, volume, source of air, system for generating aerosols, method of conditioning air, treatment of exhaust air and the method of housing the animals in a test chamber.

(*ii*) The equipment for measuring temperature, humidity, and particulate aerosol concentrations and size should be described.

(2) Exposure data shall be tabulated and presented with mean values and a measure of variability (e.g., standard deviation) and include:

(*i*) Airflow rates through the inhalation equipment.

(*ii*) Temperature and humidity of air.

(*iii*) Actual (analytical or gravimetric) concentration in the breathing zone.

(*iv*) Nominal concentration (total amount of test substance fed into the inhalation equipment divided by volume of air).

(*v*) Particle size distribution, calculated mass median aerodynamic diameter (MMAD) and geometric standard deviation (GSD).

(*vi*) Explanation as to why the desired chamber concentration and/or particle size could not be achieved (if applicable) and the efforts taken to comply with this aspect of the section.

(E) Identification of animal diet.

(iii) The test procedure shall include the following data:

(A) Method of randomization used.

(B) Full description of experimental design and procedure.

(C) Dose regimen including levels, methods, and volume.

(iv) Test results should include the following data:

(A) Group animal toxic response data shall be tabulated by species, strain, sex, and exposure level for:

(*1*) Number of animals exposed.

(*2*) Number of animals showing signs of toxicity.

(*3*) Number of animals dying.

(B) Individual animal data shall be presented, as well as summary (group mean data).

(C) Date of death during the study or whether animals survived to termination.

(D) Date of observation of each abnormal sign and its subsequent course.

(E) Absolute and relative spleen and thymus weight data.

(F) Feed and water consumption data, when collected.

(G) Results of immunotoxicity tests.

(H) Necropsy findings of animals that were found moribund and euthanized or died during the study.

(I) Statistical treatment of results, where appropriate.

(i) *Quality control.* A system shall be developed and maintained to assure and document adequate performance of laboratory staff and equipment. The study shall be conducted in compliance

with the 40 CFR Part 792—Good Laboratory Practice.

(j) *References.* For additional background information on this test guideline, the following references should be consulted. These references are available for inspection at the TSCA Nonconfidential Information Center, Rm. NE–B607, Environmental Protection Agency, 401 M St., SW., Washington, DC, 12 noon to 4 p.m., Monday through Friday, except legal holidays.

(1) Cornacoff, J.B., Graham, C.S., and LaBrie, T.K. Eds. Burleson, G.R., Dean, J.H., and Munson, A.E. Phenotypic identification of peripheral blood mononuclear leukocytes by flow cytometry as an adjunct to immunotoxicity evaluation. Vol. 1. *Methods in Immunotoxicology* (Wiley-Liss, Inc., New York, 1995) pp. 211–226.

(2) Cunningham, A.J. A method of increased sensitivity for detecting single antibody-forming cells. *Nature.* 207:1106–1107 (1965).

(3) Djeu, Julie Y. Eds. Burleson, G.R., Dean, J.H., and Munson, A.E. Natural Killer Activity. *Methods in Immunotoxicology.* pp. 437–449 (1995).

(4) Holsapple, M.P. Eds. Burleson, G.R., Dean, J.H., and Munson, A.E. The plaque-forming cell (PFC) response in Immunotoxicology: An approach to monitoring the primary effector function of B lymphocytes. Vol. 1. *Methods in Immunotoxicology* (Wiley-Liss, Inc., New York, 1995) pp. 71–108.

(5) Ladics, G.S. and Loveless, S.E. Cell surface marker analysis of splenic lymphocyte populations of the CD rat for use in immunotoxicological studies. *Toxicology Methods.* 4: 77–91 (1994).

(6) Ladics, G.S., Smith, C., Heaps, K., and Loveless, S.E. Evaluation of the humoral immune response of CD rats following a 2-week exposure to the pesticide carbaryl by the oral, dermal, or inhalation routes. *Journal of Toxicology Environmental Health.* 42:143–156 (1994).

(7) Ladics., G.S., Smith, C., Heaps, K., Elliot, G.S., Slone, T.W., and Loveless, S.E. Possible incorporation of an immunotoxicological functional assay for assessing humoral immunity for hazard identification purposes in rats on standard toxicology study. *Toxicology.* 96:225–238 (1995).

(8) Luster, M.I., Portier, C., Pait, D.G., White, K.L., Jr., Gennings, C., Munson, A.E., and Rosenthal, G.J. Risk assessment in immunotoxicology I. Sensitivity and predictability of immune tests. *Fundamental Applied Toxicology.* 18:200–210 (1992).

(9) Luster, M.I., Portier, C., Pait, D.G., Rosenthal, G.J. Germolec. D.R., Corsini, E., Blaylock, B.L., Pollock, P., Kouchi, Y., Craig, W., White, D.L., Munson, A.E., and Comment, C.E. Risk Assessment in Immunotoxicology II. Relationships Between Immune and Host Resistance Tests. *Fundamental Applied Toxicology.* 21:71–82 (1993).

(10) Temple, L., Kawabata, T. T., Munson, A. E., and White, Jr., K. L. Comparison of ELISA and plaque-forming cell assays for measuring the humoral immune response to SRBC in rats and mice treated with benzo[a]pyrene or cyclophosphamide. *Fundamental Applied Toxicology.* 21:412–419 (1993).

(11) Temple, L., Butterworth, L., Kawabata, T.T., Munson, A.E., and White, Jr., K.L. Eds. Burleson, G.R., Dean, J.H., and Munson, A.E. ELISA to Measure SRBC Specific Serum IgM: Method and Data Evaluation. Vol. 1. *Methods in Immunotoxicology* (Wiley-Liss, Inc., New York, 1995) pp. 137–157.

SUBCHAPTER S–T [RESERVED]

SUBCHAPTER U—AIR POLLUTION CONTROLS

PART 1048—CONTROL OF EMISSIONS FROM NEW, LARGE NONROAD SPARK-IGNITION ENGINES

Subpart A—Determining How to Follow This Part

Sec.
1048.1 Does this part apply to me?
1048.5 Which engines are excluded or exempted from this part's requirements?
1048.10 What main steps must I take to comply with this part?
1048.15 Do any other regulation parts affect me?
1048.20 What requirements from this part apply to my excluded engines?

Subpart B—Emission Standards and Related Requirements

1048.101 What exhaust emission standards must my engines meet?
1048.105 What evaporative emissions standards and requirements apply?
1048.110 How must my engines diagnose malfunctions?
1048.115 What other requirements must my engines meet?
1048.120 What warranty requirements apply to me?
1048.125 What maintenance instructions must I give to buyers?
1048.130 What installation instructions must I give to equipment manufacturers?
1048.135 How must I label and identify the engines I produce?
1048.140 What are the provisions for certifying Blue Sky Series engines?
1048.145 What provisions apply only for a limited time?

Subpart C—Certifying Engine Families

1048.201 What are the general requirements for submitting a certification application?
1048.205 What must I include in my application?
1048.210 May I get preliminary approval before I complete my application?
1048.215 What happens after I complete my application?
1048.220 How do I amend the maintenance instructions in my application?
1048.225 How do I amend my application to include new or modified engines?
1048.230 How do I select engine families?
1048.235 What emission testing must I perform for my application for a certificate of conformity?
1048.240 How do I demonstrate that my engine family complies with exhaust emission standards?
1048.245 How do I demonstrate that my engine family complies with evaporative emission standards?
1048.250 What records must I keep and make available to EPA?
1048.255 When may EPA deny, revoke, or void my certificate of conformity?

Subpart D—Testing Production-line Engines

1048.301 When must I test my production-line engines?
1048.305 How must I prepare and test my production-line engines?
1048.310 How must I select engines for production-line testing?
1048.315 How do I know when my engine family fails the production-line testing requirements?
1048.320 What happens if one of my production-line engines fails to meet emission standards?
1048.325 What happens if an engine family fails the production-line requirements?
1048.330 May I sell engines from an engine family with a suspended certificate of conformity?
1048.335 How do I ask EPA to reinstate my suspended certificate?
1048.340 When may EPA revoke my certificate under this subpart and how may I sell these engines again?
1048.345 What production-line testing records must I send to EPA?
1048.350 What records must I keep?

Subpart E—Testing In-use Engines

1048.401 What testing requirements apply to my engines that have gone into service?
1048.405 How does this program work?
1048.410 How must I select, prepare, and test my in-use engines?
1048.415 What happens if in-use engines do not meet requirements?
1048.420 What in-use testing information must I report to EPA?
1048.425 What records must I keep?

Subpart F—Test Procedures

1048.501 What procedures must I use to test my engines?
1048.505 What steady-state duty cycles apply for laboratory testing?
1048.510 What transient duty cycles apply for laboratory testing?
1048.515 Field-testing procedures.

Subpart G—Compliance Provisions

1048.601 What compliance provisions apply to these engines?
1048.605 What are the provisions for exempting engines from the requirements of this part if they are already certified under the motor-vehicle program?
1048.610 What are the provisions for producing nonroad equipment with engines already certified under the motor-vehicle program?
1048.615 What are the provisions for exempting engines designed for lawn and garden applications?
1048.620 What are the provisions for exempting large engines fueled by natural gas?
1048.625 What special provisions apply to engines using noncommercial fuels?

Subpart H [Reserved]

Subpart I—Definitions and Other Reference Information

1048.801 What definitions apply to this part?
1048.805 What symbols, acronyms, and abbreviations does this part use?
1048.810 What materials does this part reference?
1048.815 How should I request EPA to keep my information confidential?
1048.820 How do I request a hearing?
APPENDIX I TO PART 1048—LARGE SPARK-IGNITION (SI) TRANSIENT CYCLE FOR CONSTANT-SPEED ENGINES
APPENDIX II TO PART 1048—LARGE SPARK-IGNITION (SI) COMPOSITE TRANSIENT CYCLE

AUTHORITY: 42 U.S.C. 7401–7671(q).

SOURCE: 67 FR 68347, Nov. 8, 2002, unless otherwise noted.

Subpart A—Determining How to Follow This Part

§ 1048.1 Does this part apply to me?

(a) This part applies to you if you manufacture or import new, spark-ignition, nonroad engines (defined in § 1048.801) with maximum brake power above 19 kW, unless we exclude them under § 1048.5. See § 1048.20 for the requirements that apply to excluded engines.

(b) If you manufacture or import engines with maximum brake power at or below 19 kW that would otherwise be covered by 40 CFR part 90, you may choose to meet the requirements of this part instead. In this case, all the provisions of this part apply for those engines.

(c) As noted in subpart G of this part, 40 CFR part 1068 applies to everyone, including anyone who manufactures, installs, owns, operates, or rebuilds any of the engines this part covers or equipment containing these engines.

(d) You need not follow this part for engines you produce before January 1, 2004, unless you certify voluntarily. See §§ 1048.101 through 1048.115 and § 1048.145 and the definition of model year in § 1048.801 for more information about the timing of new requirements.

(e) See §§ 1048.801 and 1048.805 for definitions and acronyms that apply to this part. The definition section contains significant regulatory provisions and it is very important that you read them.

§ 1048.5 Which engines are excluded or exempted from this part's requirements?

(a) This part does not apply to the following nonroad engines:

(1) Engines certified to meet the requirements of 40 CFR part 1051 (for example, engines used in snowmobiles and all-terrain vehicles).

(2) Propulsion marine engines. See 40 CFR part 91. This part applies with respect to auxiliary marine engines.

(b) See subpart G of this part and 40 CFR part 1068, subpart C, for exemptions of specific engines.

(c) Send the Designated Officer a written request if you want us to determine whether this part covers or excludes certain engines. Excluding engines from this part's requirements does not affect other requirements that may apply to them.

NOTE: See 40 CFR part 87 for engines used in aircraft.)

(d) As defined in § 1048.801, stationary engines are not required to comply with this part (because they are not nonroad engines), except that you must meet the requirements in § 1048.20. In addition, the prohibitions in 40 CFR 1068.101 restrict the use of stationary engines for non-stationary purposes.

§ 1048.10 What main steps must I take to comply with this part?

(a) You must have a certificate of conformity from us for each engine

family before you do any of the following with a new nonroad engine covered by this part: sell, offer for sale, introduce into commerce, distribute or deliver for introduction into commerce, or import it into the United States. ''New'' engines may include some already placed in service (see the definition of ''new nonroad engine'' and ''new nonroad equipment'' in § 1048.801). You must get a new certificate of conformity for each new model year.

(b) To get a certificate of conformity and comply with its terms, you must do six things:

(1) Meet the emission standards and other requirements in subpart B of this part.

(2) Perform preproduction emission tests.

(3) Apply for certification (see subpart C of this part).

(4) Do routine emission testing on production engines as required by subpart D of this part.

(5) Do emission testing on in-use engines, as we direct under subpart E of this part.

(6) Follow our instructions throughout this part.

(c) Subpart F of this part describes how to test your engines (including references to other parts).

(d) Subpart G of this part and 40 CFR part 1068 describe requirements and prohibitions that apply to engine manufacturers, equipment manufacturers, owners, operators, rebuilders, and all others.

§ 1048.15 Do any other regulation parts affect me?

(a) Part 1065 of this chapter describes procedures and equipment specifications for testing engines. Subpart F of this part describes how to apply the provisions of part 1065 of this chapter to show you meet the emission standards in this part.

(b) Part 1068 of this chapter describes general provisions, including these seven areas:

(1) Prohibited acts and penalties for engine manufacturers, equipment manufacturers, and others.

(2) Rebuilding and other aftermarket changes.

(3) Exclusions and exemption for certain engines.

(4) Importing engines.

(5) Selective enforcement audits of your production.

(6) Defect reporting and recall.

(7) Procedures for hearings.

(c) Other parts of this chapter affect you if referenced in this part.

§ 1048.20 What requirements from this part apply to my excluded engines?

(a) Engine manufacturers producing an engine excluded under § 1048.5(d) must add a permanent label or tag identifying each engine. This applies equally to importers. To meet labeling requirements, you must do the following things:

(1) Attach the label or tag in one piece so no one can remove it without destroying or defacing it.

(2) Make sure it is durable and readable for the engine's entire life.

(3) Secure it to a part of the engine needed for normal operation and not normally requiring replacement.

(4) Write it in block letters in English.

(5) Instruct equipment manufacturers that they must place a duplicate label as described in 40 CFR 1068.105 if they obscure the engine's label.

(b) Engine labels or tags required under this section must have the following information:

(1) Include the heading ''Emission Control Information''.

(2) Include your full corporate name and trademark.

(3) State the engine displacement (in liters) and maximum brake power.

(4) State: ''THIS ENGINE IS EXCLUDED FROM THE REQUIREMENTS OF 40 CFR PART 1048 AS A ''STATIONARY ENGINE.'' INSTALLING OR USING THIS ENGINE IN ANY OTHER APPLICATION MAY BE A VIOLATION OF FEDERAL LAW SUBJECT TO CIVIL PENALTY.''.

Subpart B—Emission Standards and Related Requirements

§ 1048.101 What exhaust emission standards must my engines meet?

Apply the exhaust emission standards in this section by model year. You may choose to certify engines earlier than we require. The Tier 1 standards apply only to steady-state testing, as

described in paragraph (b) of this section. The Tier 2 standards apply to steady-state, transient, and field testing, as described in paragraphs (a), (b), and (c) of this section.

(a) *Standards for transient testing.* Starting in the 2007 model year, Tier 2 exhaust emission standards apply for transient measurement of emissions with the duty-cycle test procedures in subpart F of this part:

(1) The Tier 2 $HC+NO_X$ standard is 2.7 g/kW-hr and the Tier 2 CO standard is 4.4 g/kW-hr. For severe-duty engines, the Tier 2 $HC+NO_X$ standard is 2.7 g/kW-hr and the Tier 2 CO standard is 130.0 g/kW-hr. The standards in this paragraph (a) do not apply for transient testing of high-load engines.

(2) You may optionally certify your engines according to the following formula instead of the standards in paragraph (a)(1) of this section: $(HC+NO_X) \times CO^{0.784} \leq 8.57$. The $HC+NO_X$ and CO emission levels you select to satisfy this formula, rounded to the nearest 0.1 g/kW-hr, become the emission standards that apply for those engines. You may not select an $HC+NO_X$ emission standard higher than 2.7 g/kW-hr or a CO emission standard higher than 20.6 g/kW-hr. The following table illustrates a range of possible values under this paragraph (a)(2):

TABLE 1 OF § 1048.101—EXAMPLES OF POSSIBLE TIER 2 DUTY-CYCLE EMISSION STANDARDS

$HC+NO_X$ (g/kW-hr)	CO (g/kW-hr)
2.7	4.4
2.2	5.6
1.7	7.9
1.3	11.1
1.0	15.5
0.8	20.6

(b) *Standards for steady-state testing.* Except as we allow in paragraph (d) of this section, the following exhaust emission standards apply for steady-state measurement of emissions with the duty-cycle test procedures in subpart F of this part:

(1) The following table shows the Tier 1 exhaust emission standards that apply to engines from 2004 through 2006 model years:

TABLE 2 OF § 1048.101—TIER 1 EMISSION STANDARDS (G/KW-HR)

Testing	General emission standards		Alternate emission standards for severe-duty engines	
	$HC+NO_X$	CO	$HC+NO_X$	CO
Certification and production-line testing	4.0	50.0	4.0	130.0
In-use testing	5.4	50.0	5.4	130.0

(2) Starting in the 2007 model year, engines must meet the Tier 2 exhaust emission standards in paragraph (a) of this section for both steady-state and transient testing. See paragraph (d) of this section for alternate standards that apply for certain engines.

(c) *Standards for field testing.* Starting in 2007, the following Tier 2 exhaust emission standards apply for emission measurements with the field-testing procedures in subpart F of this part:

(1) The $HC+NO_X$ standard is 3.8 g/kW-hr and the CO standard is 6.5 g/kW-hr. For severe-duty engines, the $HC+NO_X$ standard is 3.8 g/kW-hr and the CO standard is 200.0 g/kW-hr. For natural gas-fueled engines, you are not required to measure nonmethane hydrocarbon emissions or total hydrocarbon emissions for testing to show that the engine meets the emission standards of this paragraph (c); that is, you may assume HC emissions are equal to zero.

(2) You may apply the following formula to determine alternate emission standards that apply to your engines instead of the standards in paragraph (c)(1) of this section: $(HC+NO_X) \times CO^{0.791} \leq 16.78$. $HC+NO_X$ emission levels may not exceed 3.8 g/kW-hr and CO emission levels may not exceed 31.0 g/kW-hr. The following table illustrates a range of possible values under this paragraph (c)(2):

TABLE 3 OF § 1048.101—EXAMPLES OF POSSIBLE TIER 2 FIELD-TESTING EMISSION STANDARDS

$HC+NO_X$ (g/kW-hr)	CO (g/kW-hr)
3.8	6.5
3.1	8.5
2.4	11.7
1.8	16.8
1.4	23.1
1.1	31.0

(d) *Engine protection.* For engines that require enrichment at high loads to protect the engine, you may ask to meet alternate Tier 2 standards of 2.7 g/kW-hr for $HC+NO_X$ and 31.0 g/kW-hr for CO instead of the emission standards described in paragraph (b)(2) of this section for steady-state testing. If we approve your request, you must still meet the transient testing standards in paragraph (a) of this section and the field-testing standards in paragraph (c) of this section. To qualify for this allowance, you must do all the following things:

(1) Show that enrichment is necessary to protect the engine from damage.

(2) Show that you limit enrichment to operating modes that require additional cooling to protect the engine from damage.

(3) Show in your application for certification that enrichment will rarely occur in use in the equipment in which your engines are installed. For example, an engine that is expected to operate 5 percent of the time in use with enrichment would clearly not qualify.

(4) Include in your installation instructions any steps necessary for someone installing your engines to prevent enrichment during normal operation (see § 1048.130).

(e) *Fuel types.* Apply the exhaust emission standards in this section for engines using each type of fuel specified in 40 CFR part 1065, subpart C, for which they are designed to operate. You must meet the numerical emission standards for hydrocarbons in this section based on the following types of hydrocarbon emissions for engines powered by the following fuels:

(1) Gasoline- and LPG-fueled engines: THC emissions.

(2) Natural gas-fueled engines: NMHC emissions.

(3) Alcohol-fueled engines: THCE emissions.

(f) *Small engines.* Certain engines with total displacement at or below 1000 cc may comply with the requirements of 40 CFR part 90 instead of complying with the requirements of this part, as described in § 1048.615.

(g) *Useful life.* Your engines must meet the exhaust emission standards in paragraphs (a) through (c) of this section over their full useful life (§ 1048.240 describes how to use deterioration factors to show this). The minimum useful life is 5,000 hours of operation or seven years, whichever comes first.

(1) Specify a longer useful life in hours for an engine family under either of two conditions:

(i) If you design, advertise, or market your engine to operate longer than the minimum useful life (your recommended hours until rebuild may indicate a longer design life).

(ii) If your basic mechanical warranty is longer than the minimum useful life.

(2) You may request a shorter useful life for an engine family if you have documentation from in-use engines showing that these engines will rarely operate longer than the alternate useful life. The useful life value may not be shorter than any of the following:

(i) 1,000 hours of operation.

(ii) Your recommended overhaul interval.

(iii) Your mechanical warranty for the engine.

(h) *Applicability for testing.* The standards in this subpart apply to all testing, including production-line and in-use testing, as described in subparts D and E of this part.

§ 1048.105 What evaporative emissions standards and requirements apply?

(a) Starting in the 2007 model year, engines that run on a volatile liquid fuel (such as gasoline), must meet the following evaporative emissions standards and requirements:

(1) Evaporative hydrocarbon emissions may not exceed 0.2 grams per gallon of fuel tank capacity when measured with the test procedures for evaporative emissions in subpart F of this part.

(2) For nonmetallic fuel lines, you must specify and use products that meet the Category 1 specifications in SAE J2260 (incorporated by reference in § 1048.810).

(3) Liquid fuel in the fuel tank may not reach boiling during continuous engine operation in the final installation at an ambient temperature of 30 °C. Note that gasoline with a Reid vapor pressure of 62 kPa (9 psi) begins to boil at about 53 °C.

(b) Note that § 1048.245 allows you to use design-based certification instead of generating new emission data.

(c) If other companies install your engines in their equipment, give them any appropriate instructions, as described in § 1048.130.

§ 1048.110 How must my engines diagnose malfunctions?

(a) *Equip your engines with a diagnostic system.* Starting in the 2007 model year, equip each engine with a diagnostic system that will detect significant malfunctions in its emission-control system using one of the following protocols:

(1) If your emission-control strategy depends on maintaining air-fuel ratios at stoichiometry, an acceptable diagnostic design would identify malfunction whenever the air-fuel ratio does not cross stoichiometry for one minute of intended closed-loop operation. You may use other diagnostic strategies if we approve them in advance.

(2) If the protocol described in paragraph (a)(1) of this section does not apply to your engine, you must use an alternative approach that we approve in advance. Your alternative approach must generally detect when the emission-control system is not functioning properly.

(b) *Use a malfunction-indicator light (MIL).* The MIL must be readily visible to the operator; it may be any color except red. When the MIL goes on, it must display ''Check Engine,'' ''Service Engine Soon,'' or a similar message that we approve. You may use sound in addition to the light signal. The MIL must go on under each of these circumstances:

(1) When a malfunction occurs, as described in paragraph (a) of this section.

(2) When the diagnostic system cannot send signals to meet the requirement of paragraph (b)(1) of this section.

(3) When the engine's ignition is in the ''key-on'' position before starting or cranking. The MIL should go out after engine starting if the system detects no malfunction.

(c) *Control when the MIL can go out.* If the MIL goes on to show a malfunction, it must remain on during all later engine operation until servicing corrects the malfunction. If the engine is not serviced, but the malfunction does not recur for three consecutive engine starts during which the malfunctioning system is evaluated and found to be working properly, the MIL may stay off during later engine operation.

(d) *Store trouble codes in computer memory.* Record and store in computer memory any diagnostic trouble codes showing a malfunction that should illuminate the MIL. The stored codes must identify the malfunctioning system or component as uniquely as possible. Make these codes available through the data link connector as described in paragraph (g) of this section. You may store codes for conditions that do not turn on the MIL. The system must store a separate code to show when the diagnostic system is disabled (from malfunction or tampering).

(e) *Make data, access codes, and devices accessible.* Make all required data accessible to us without any access codes or devices that only you can supply. Ensure that anyone servicing your engine can read and understand the diagnostic trouble codes stored in the onboard computer with generic tools and information.

(f) *Consider exceptions for certain conditions.* Your diagnostic systems may disregard trouble codes for the first three minutes after engine starting. You may ask us to approve diagnostic-system designs that disregard trouble codes under other conditions that would produce an unreliable reading, damage systems or components, or cause other safety risks. This might include operation at altitudes over 8,000 feet.

(g) *Follow standard references for formats, codes, and connections.* Follow conventions defined in the following documents (incorporated by reference

in § 1048.810) or ask us to approve using updated versions of (or variations from) these documents:

(1) ISO 9141–2 Road vehicles-Diagnostic systems—Part 2: CARB requirements for interchange of digital information, February 1994.

(2) ISO 14230–4 Road vehicles—Diagnostic systems—Keyword Protocol 2000—Part 4: Requirements for emission-related systems, June 2000.

§ 1048.115 What other requirements must my engines meet?

Your engines must meet the following requirements:

(a) *Closed crankcase.* Your engines may not vent crankcase emissions into the atmosphere throughout their useful life, with the following exception: your engines may vent crankcase emissions if you measure and include these crankcase emissions with all measured exhaust emissions.

(b) *Torque broadcasting.* Electronically controlled engines must broadcast their speed and output shaft torque (in newton-meters) on their controller area networks. Engines may alternatively broadcast a surrogate value for torque that can be read with a remote device. This information is necessary for testing engines in the field (see 40 CFR 1065.515). This requirement applies beginning in the 2007 model year. Small-volume engine manufacturers may omit this requirement.

(c) *EPA access to broadcast information.* If we request it, you must provide us any hardware or tools we would need to readily read, interpret, and record all information broadcast by an engine's on-board computers and electronic control modules. If you broadcast a surrogate parameter for torque values, you must provide us what we need to convert these into torque units. We will not ask for hardware or tools if they are readily available commercially.

(d) *Emission sampling capability.* Produce all your engines to allow sampling of exhaust emissions in the field without damaging the engine or equipment. Show in your application for certification how this can be done in a way that prevents diluting the exhaust sample with ambient air. To do this, you might simply allow for extending the exhaust pipe by 20 cm; you might also install exhaust ports downstream of any aftertreatment devices.

(e) *Adjustable parameters.* Engines that have adjustable parameters must meet all the requirements of this part for any adjustment in the physically adjustable range.

(1) We do not consider an operating parameter adjustable if you permanently seal it or if ordinary tools cannot readily access it.

(2) We may require that you set adjustable parameters to any specification within the adjustable range during certification testing, production-line testing, selective enforcement auditing, or any in-use testing.

(f) *Prohibited controls.* You may not design your engines with emission-control devices, systems, or elements of design that cause or contribute to an unreasonable risk to public health, welfare, or safety while operating. For example, this would apply if the engine emits a noxious or toxic substance it would otherwise not emit that contributes to such an unreasonable risk.

(g) *Defeat devices.* You may not equip your engines with a defeat device. A defeat device is an auxiliary emission-control device that reduces the effectiveness of emission controls under conditions you may reasonably expect the engine to encounter during normal operation and use. This does not apply to auxiliary emission-control devices you identify in your certification application if any of the following is true:

(1) The conditions of concern were substantially included in your prescribed duty cycles.

(2) You show your design is necessary to prevent catastrophic engine (or equipment) damage or accidents.

(3) The reduced effectiveness applies only to starting the engine.

§ 1048.120 What warranty requirements apply to me?

(a) *General requirements.* You must warrant to the ultimate buyer that the new nonroad engine meets two conditions:

(1) It is designed, built, and equipped it to conform at the time of sale with the requirements of this part.

(2) It is free from defects in materials and workmanship that may keep it from meeting these requirements.

(b) *Warranty period.* Your emission-related warranty must be valid for at least 50 percent of the engine's useful life in hours of operation or at least three years, whichever comes first. In the case of a high-cost warranted part, the warranty must be valid for at least 70 percent of the engine's useful life in hours of operation or at least five years, whichever comes first. You may offer an emission-related warranty more generous than we require. This warranty may not be shorter than any published or negotiated warranty you offer for the engine or any of its components. If an engine has no hour meter, we base the warranty periods in this paragraph (b) only on the engine's age (in years).

(c) *Components covered.* The emission-related warranty must cover components whose failure would increase an engine's emissions, including electronic controls, fuel injection (for liquid or gaseous fuels), exhaust-gas recirculation, aftertreatment, or any other system you develop to control emissions. We generally consider replacing or repairing other components to be the owner's responsibility.

(d) *Scheduled maintenance.* You may schedule emission-related maintenance for a component named in paragraph (c) of this section, subject to the restrictions of § 1048.125. You are not required to cover this scheduled maintenance under your warranty if the component meets either of the following criteria:

(1) The component was in general use on similar engines, and was subject to scheduled maintenance, before January 1, 2000.

(2) Failure of the component would clearly degrade the engine's performance enough that the operator would need to repair or replace it.

(e) *Limited applicability.* You may deny warranty claims under this section if the operator caused the problem, as described in 40 CFR 1068.115.

(f) *Aftermarket parts.* As noted 40 CFR 1068.101, it is a violation of the Act to manufacture an engine part if one of its main effects is to reduce the effectiveness of the engine's emission controls. If you make an aftermarket part, you may—but do not have to—certify that using the part will still allow engines to meet emission standards, as described in 40 CFR 85.2114.

§ 1048.125 What maintenance instructions must I give to buyers?

Give the ultimate buyer of each new nonroad engine written instructions for properly maintaining and using the engine, including the emission-control system. The maintenance instructions also apply to service accumulation on your test engines, as described in 40 CFR part 1065, subpart E.

(a) *Critical emission-related maintenance.* Critical emission-related maintenance includes any adjustment, cleaning, repair, or replacement of air-induction, fuel-system, or ignition components, aftertreatment devices, exhaust gas recirculation systems, crankcase ventilation valves, sensors, or electronic control units. This may also include any other component whose only purpose is to reduce emissions or whose failure will increase emissions without significantly degrading engine performance. You may schedule critical emission-related maintenance on these components if you meet the following conditions:

(1) You may ask us to approve critical emission-related maintenance only if it meets two criteria:

(i) Operators are reasonably likely to do the maintenance you call for.

(ii) Engines need the maintenance to meet emission standards.

(2) We will accept scheduled maintenance as reasonably likely to occur in use if you satisfy any of four conditions:

(i) You present data showing that, if a lack of maintenance increases emissions, it also unacceptably degrades the engine's performance.

(ii) You present survey data showing that 80 percent of engines in the field get the maintenance you specify at the recommended intervals.

(iii) You provide the maintenance free of charge and clearly say so in maintenance instructions for the customer.

(iv) You otherwise show us that the maintenance is reasonably likely to be done at the recommended intervals.

(3) You may not schedule critical emission-related maintenance more frequently than the following intervals, except as specified in paragraph (a)(4) of this section:

(i) For catalysts, fuel injectors, electronic control units, superchargers, and turbochargers: the useful life of the engine family.

(ii) For gaseous fuel-system components (cleaning without disassembly only) and oxygen sensors: 2,500 hours.

(4) If your engine family has an alternate useful life shorter than the period specified in paragraph (a)(3)(ii) of this section, you may not schedule maintenance on those components more frequently than the alternate useful life (*see* § 1048.101(g)).

(b) *Recommended additional maintenance.* You may recommend any additional amount of maintenance on the components listed in paragraph (a) of this section, as long as you make clear that these maintenance steps are not necessary to keep the emission-related warranty valid. If operators do the maintenance specified in paragraph (a) of this section, but not the recommended additional maintenance, this does not allow you to disqualify them from in-use testing or deny a warranty claim.

(c) *Special maintenance.* You may specify more frequent maintenance to address problems related to special situations such as substandard fuel or atypical engine operation. For example, you may specify more frequent cleaning of fuel system components for engines you have reason to believe will be using fuel that causes substantially more engine performance problems than commercial fuels of the same type that are generally available across the United States.

(d) *Noncritical emission-related maintenance.* For engine parts not listed in paragraph (a) of this section, you may schedule any amount of emission-related inspection or maintenance. But you must state clearly that these steps are not necessary to keep the emission-related warranty valid. Also, do not take these inspection or maintenance steps during service accumulation on your test engines.

(e) *Maintenance that is not emission-related.* For maintenance unrelated to emission controls, you may schedule any amount of inspection or maintenance. You may also take these inspection or maintenance steps during service accumulation on your test vehicles or engines. This might include adding engine oil or changing air, fuel, or oil filters.

(f) *Source of parts and repairs.* Print clearly on the first page of your written maintenance instructions that any repair shop or person may maintain, replace, or repair emission-control devices and systems. Your instructions may not require components or service identified by brand, trade, or corporate name. Also, do not directly or indirectly condition your warranty on a requirement that the vehicle be serviced by your franchised dealers or any other service establishments with which you have a commercial relationship. You may disregard the requirements in this paragraph (f) if you do one of two things:

(1) Provide a component or service without charge under the purchase agreement.

(2) Get us to waive this prohibition in the public's interest by convincing us the engine will work properly only with the identified component or service.

§ 1048.130 What installation instructions must I give to equipment manufacturers?

(a) If you sell an engine for someone else to install in a piece of nonroad equipment, give the buyer of the engine written instructions for installing it consistent with the requirements of this part. Include all information necessary to ensure that engines installed this way will meet emission standards.

(b) Make sure these instructions have the following information:

(1) Include the heading: ''Emission-related installation instructions''.

(2) State: ''Failing to follow these instructions when installing a certified engine in a piece of nonroad equipment violates federal law (40 CFR 1068.105(b)), subject to fines or other penalties as described in the Clean Air Act.''.

(3) Describe any other instructions needed to install an exhaust

aftertreatment device and to locate exhaust sampling ports consistent with your application for certification.

(4) Describe the steps needed to control evaporative emissions, as described in §§ 1048.105 and 1048.245.

(5) Describe any necessary steps for installing the diagnostic system described in § 1048.110.

(6) Describe any limits on the range of applications needed to ensure that the engine operates consistently with your application for certification. For example, if your engines are certified only for constant-speed operation, tell equipment manufacturers not to install the engines in variable-speed applications. Also, if you need to avoid sustained high-load operation to meet the field-testing emission standards we specify in § 1048.101(c) or to comply with the provisions of § 1048.101(d), describe how the equipment manufacturer must properly size the engines for a given application.

(7) Describe any other instructions to make sure the installed engine will operate according to design specifications in your application for certification.

(8) State: ''If you install the engine in a way that makes the engine's emission control information label hard to read during normal engine maintenance, you must place a duplicate label on the vehicle, as described in 40 CFR 1068.105.''.

(c) You do not need installation instructions for engines you install in your own equipment.

§ 1048.135 How must I label and identify the engines I produce?

(a) Assign each production engine a unique identification number and permanently and legibly affix, engrave, or stamp it on the engine.

(b) At the time of manufacture, add a permanent emission control information label identifying each engine. To meet labeling requirements, do four things:

(1) Attach the label in one piece so it is not removable without being destroyed or defaced.

(2) Design and produce it to be durable and readable for the engine's entire life.

(3) Secure it to a part of the engine needed for normal operation and not normally requiring replacement.

(4) Write it in block letters in English.

(c) On your engine's emission control information label, do 13 things:

(1) Include the heading ''EMISSION CONTROL INFORMATION''.

(2) Include your full corporate name and trademark.

(3) State: ''THIS ENGINE IS CERTIFIED TO OPERATE ON [specify operating fuel or fuels].''.

(4) Identify the emission-control system; your identifiers must use names and abbreviations consistent with SAE J1930 (incorporated by reference in § 1048.810).

(5) List all requirements for fuel and lubricants.

(6) State the date of manufacture (DAY (optional), MONTH, and YEAR); if you stamp this information on the engine and print it in the owner's manual, you may omit it from the emission control information label.

(7) State: ''THIS ENGINE MEETS U.S. ENVIRONMENTAL PROTECTION AGENCY REGULATIONS FOR (MODEL YEAR) LARGE NONROAD SI ENGINES.''.

(8) Include EPA's standardized designation for the engine family (and subfamily, where applicable).

(9) State the engine's displacement (in liters) and maximum brake power.

(10) State the engine's useful life (see § 1048.101(g)).

(11) List specifications and adjustments for engine tuneups; show the proper position for the transmission during tuneup and state which accessories should be operating.

(12) Describe other information on proper maintenance and use.

(13) Identify the emission standards to which you have certified the engine.

(d) Some of your engines may need more information on the emission control information label.

(1) If you have an engine family that has been certified only for constant-speed engines, add to the engine label ''CONSTANT-SPEED ONLY''.

(2) If you have an engine family that has been certified only for variable-speed engines, add to the engine label ''VARIABLE-SPEED ONLY''.

(3) If you have an engine family that has been certified only for high-load engines, add to the engine label ''THIS ENGINE IS NOT INTENDED FOR OPERATION AT LESS THAN 75 PERCENT OF FULL LOAD.''.

(4) If you certify an engine to the voluntary standards in § 1048.140, add to the engine label ''BLUE SKY SERIES''.

(5) If you produce an engine we exempt from the requirements of this part, see subpart G of this part and 40 CFR part 1068, subparts C and D, for more label information.

(6) If you certify an engine family under § 1048.101(d) (and show in your application for certification that in-use engines will experience infrequent high-load operation), add to the engine label ''THIS ENGINE IS NOT INTENDED FOR OPERATION AT MORE THAN __ PERCENT OF FULL LOAD.''. Specify the appropriate percentage of full load based on the nature of the engine protection. You may add other statements to discourage operation in engine-protection modes.

(e) Some engines may not have enough space for an emission control information label with all the required information. In this case, you may omit the information required in paragraphs (c)(3), (c)(4), (c)(5), and (c)(12) of this section if you print it in the owner's manual instead.

(f) If you are unable to meet these labeling requirements, you may ask us to modify them consistent with the intent of this section.

§ 1048.140 What are the provisions for certifying Blue Sky Series engines?

This section defines voluntary standards for a recognized level of superior emission control for engines designated as ''Blue Sky Series'' engines. Blue Sky Series engines must meet one of the following standards:

(a) For the 2003 model year, to receive a certificate of conformity, a ''Blue Sky Series'' engine family must meet all the requirements in this part that apply to 2004 model year engines. This includes all testing and reporting requirements.

(b) For the 2003 through 2006 model years, to receive a certificate of conformity, a ''Blue Sky Series'' engine family must meet all the requirements in this part that apply to 2007 model year engines. This includes all testing and reporting requirements.

(c) For any model year, to receive a certificate of conformity as a ''Blue Sky Series'' engine family must meet all the requirements in this part, while certifying to the following exhaust emission standards:

(1) 0.8 g/kW-hr $HC+NO_X$ and 4.4 g/kW-hr CO using steady-state and transient test procedures, as described in subpart F of this part.

(2) 1.1 g/kW-hr $HC+NO_X$ and 6.6 g/kW-hr CO using field-testing procedures, as described in subpart F of this part.

(d) If you certify an engine family under this section, it is subject to all the requirements of this part as if these voluntary standards were mandatory.

§ 1048.145 What provisions apply only for a limited time?

The provisions in this section apply instead of other provisions in this part. This section describes when these interim provisions expire.

(a) *Family banking.* You may certify an engine family to comply with Tier 1 or Tier 2 standards earlier than necessary. For each model year of early compliance for an engine family, you may delay compliance with the same standards for an equal number of engines from another engine family (or families) for one model year. If you certify engines under the voluntary standards of § 1048.140, you may not use them in your calculation under this paragraph (a). Base your calculation on actual power-weighted nationwide sales for each family. You may delay compliance for up to three model years. For example, if you sell 1,000 engines with an average power rating of 60 kW certified a year early, you may delay certification to that tier of standards for up to 60,000 kW-engine-years in any of the following ways:

(1) Delay certification of another engine family with an average power rating of 100 kW of up to 600 engines for one model year.

(2) Delay certification of another engine family with an average power rating of 100 kW of up to 200 engines for three model years.

(3) Delay certification of one engine family with an average power rating of 100 kW of up to 400 engines for one model year and a second engine family with an average power rating of 200 kW of up to 50 engines for two model years.

(b) *Hydrocarbon standards.* For 2004 through 2006 model years, engine manufacturers may use nonmethane hydrocarbon measurements to demonstrate compliance with applicable emission standards.

(c) *Transient emission testing.* Engines rated over 560 kW are exempt from the transient emission standards in § 1048.101(a).

(d) *Tier 1 deterioration factors.* For Tier 1 engines, base the deterioration factor from § 1048.240 on 3500 hours of operation. We may assign a deterioration factor for a Tier 1 engine family, but this would not affect your need to meet all emission standards that apply.

(e) [Reserved]

(f) *Optional early field testing.* You may optionally use the field-testing procedures in subpart F of this part for any in-use testing required under subpart E of this part to show that you meet Tier 1 standards. In this case, the same Tier 1 in-use emission standards apply to both steady-state testing in the laboratory and field testing.

(g) *Small-volume provisions.* If you qualify for the hardship provisions in § 1068.250 of this chapter, we may approve extensions of up to four years total.

(h) *2004 certification.* For the 2004 model year, you may choose to have the emission standards and other requirements that apply to these engines in California serve as the emission standards and other requirements applicable under this part, instead of those in subpart A of this part. To ask for a certificate under this paragraph (h), send us the application for certification that you prepare for the California Air Resources Board instead of the information we otherwise require in § 1048.205.

(i) *Recreational vehicles.* Engines or vehicles identified in the scope of 40 CFR part 1051 that are not yet regulated under that part are excluded from the requirements of this part. For example, snowmobiles produced in 2004 are not subject to the emission standards in this part. Once emission standards apply to these engines and vehicles, they are excluded from the requirements of this part under § 1048.5(a)(1).

Subpart C—Certifying Engine Families

§ 1048.201 What are the general requirements for submitting a certification application?

(a) Send us an application for a certificate of conformity for each engine family. Each application is valid for only one model year.

(b) The application must not include false or incomplete statements or information (see § 1048.255).

(c) We may choose to ask you to send us less information than we specify in this subpart, but this would not change your recordkeeping requirements.

(d) Use good engineering judgment for all decisions related to your application (see 40 CFR 1068.5).

(e) An authorized representative of your company must approve and sign the application.

§ 1048.205 What must I include in my application?

In your application, do all the following things unless we ask you to send us less information:

(a) Describe the engine family's specifications and other basic parameters of the engine's design. List the types of fuel you intend to use to certify the engine family (for example, gasoline, liquefied petroleum gas, methanol, or natural gas).

(b) Explain how the emission-control systems operate.

(1) Describe in detail all the system components for controlling exhaust emissions, including auxiliary emission-control devices and all fuel-system components you will install on any production or test engine. Explain why any auxiliary emission-control devices are not defeat devices (see § 1048.115(g)). Do not include detailed calibrations for components unless we ask for them.

(2) Describe the evaporative emission controls.

(c) Explain how the engine diagnostic system works, describing especially

the engine conditions (with the corresponding diagnostic trouble codes) that cause the malfunction-indicator light to go on. Propose what you consider to be extreme conditions under which the diagnostic system should disregard trouble codes, as described in § 1048.110.

(d) Describe the engines you selected for testing and the reasons for selecting them.

(e) Describe any special or alternate test procedures you used (see § 1048.501).

(f) Describe how you operated the engine or vehicle prior to testing, including the duty cycle and the number of engine operating hours used to stabilize emission levels. Describe any scheduled maintenance you did.

(g) List the specifications of the test fuel to show that it falls within the required ranges we specify in 40 CFR part 1065, subpart C.

(h) Identify the engine family's useful life.

(i) Propose maintenance and use instructions for the ultimate buyer of each new nonroad engine (see § 1048.125).

(j) Propose emission-related installation instructions if you sell engines for someone else to install in a piece of nonroad equipment (see § 1048.130).

(k) Identify each high-cost warranted part and show us how you calculated its replacement cost, including the estimated retail cost of the part, labor rates, and labor hours to diagnose and replace defective parts.

(l) Propose an emission control information label.

(m) Present emission data to show that you meet emission standards.

(1) Present exhaust emission data for HC, NO_X, and CO on a test engine to show your engines meet the duty-cycle emission standards we specify in § 1048.101(a) and (b). Show these figures before and after applying deterioration factors for each engine. Starting in the 2007 model year, identify the duty-cycle emission standards to which you are certifying engines in the engine family. Include test data for each type of fuel from 40 CFR part 1065, subpart C, on which you intend for engines in the engine family to operate (for example, gasoline, liquefied petroleum gas, methanol, or natural gas). If we specify more than one grade of any fuel type (for example, a summer grade and winter grade of gasoline), you only need to submit test data for one grade, unless the regulations of this part specify otherwise for your engine. Note that § 1048.235 allows you to submit an application in certain cases without new emission data.

(2) If your engine family includes a volatile liquid fuel (and you do not use design-based certification under § 1048.245) present evaporative test data to show your vehicles meet the evaporative emission standards we specify in subpart B of this part. Show these figures before and after applying deterioration factors, where applicable.

(n) Report all test results, including those from invalid tests or from any nonstandard tests (such as measurements based on exhaust concentrations in parts per million).

(o) Identify the engine family's deterioration factors and describe how you developed them. Present any emission test data you used for this.

(p) Describe all adjustable operating parameters (see § 1048.115(e)), including the following:

(1) The nominal or recommended setting.

(2) The intended physically adjustable range, including production tolerances if they affect the range.

(3) The limits or stops used to establish adjustable ranges.

(q) Describe everything we need to read and interpret all the information broadcast by an engine's onboard computers and electronic control modules and state that you will give us any hardware or tools we would need to do this. You may reference any appropriate publicly released standards that define conventions for these messages and parameters. Format your information consistent with publicly released standards.

(r) State whether your engine will operate in variable-speed applications, constant-speed applications, or both. If your certification covers only constant-speed or only variable-speed applications, describe how you will prevent use of these engines in the applications for which they are not certified.

(s) Starting in the 2007 model year, state that all the engines in the engine family comply with the field-testing emission standards we specify in §1048.101(c) for all normal operation and use (see §1048.515). Describe in detail any testing, engineering analysis, or other information on which you base this statement.

(t) State that you operated your test engines according to the specified procedures and test parameters using the fuels described in the application to show you meet the requirements of this part.

(u) State unconditionally that all the engines in the engine family comply with the requirements of this part, other referenced parts, and the Clean Air Act.

(v) Include estimates of U.S.-directed production volumes.

(w) Show us how to modify your production engines to measure emissions in the field (see §1048.115(d)).

(x) Add other information to help us evaluate your application if we ask for it.

§1048.210 May I get preliminary approval before I complete my application?

If you send us information before you finish the application, we will review it and make any appropriate determinations listed in §1048.215(b)(1) through (7). Decisions made under this section are considered to be preliminary approval. We will generally not disapprove applications under §1048.215(b)(1) through (5) where we have given you preliminary approval, unless we find new and substantial information supporting a different decision.

(a) If you request preliminary approval related to the upcoming model year or the model year after that, we will make a ''best-efforts'' attempt to make the appropriate determinations as soon as possible. We will generally not provide preliminary approval related to a future model year more than two years ahead of time.

(b) You may consider full compliance with published guidance to be preliminary approval only if the guidance includes a statement that we intend you to consider it as such.

§1048.215 What happens after I complete my application?

(a) If any of the information in your application changes after you submit it, amend it as described in §1048.225.

(b) We may deny your application (that is, determine that we cannot approve it without revision) if the engine family does not meet the requirements of this part or the Act. For example:

(1) If you inappropriately use the provisions of §1048.230(c) or (d) to define a broader or narrower engine family, we will require you to redefine your engine family.

(2) If we determine you did not appropriately select the useful life under §1048.101(g), we will require you to lengthen it.

(3) If we determine you did not appropriately select deterioration factors under §1048.240(c), we will require you to revise them.

(4) If your diagnostic system is inadequate for detecting significant malfunctions in emission-control systems, as described in §1048.110(b), we will require you to make the system more effective.

(5) If your diagnostic system inappropriately disregards trouble codes under certain conditions, as described in §1048.110(f), we will require you to change the system to operate under broader conditions.

(6) If your proposed emission control information label is inconsistent with §1048.135, we will require you to change it (and tell you how, if possible).

(7) If you require or recommend maintenance and use instructions inconsistent with §1048.125, we will require you to change them.

(8) If we find any other problem with your application, we will tell you what the problem is and what needs to be corrected.

(c) If we determine your application is complete and shows that the engine family meets all the requirements of this part and the Act, we will issue a certificate of conformity for your engine family for that model year. If we deny the application, we will explain why in writing. You may then ask us to hold a hearing to reconsider our decision (see §1048.820).

§ 1048.220 How do I amend the maintenance instructions in my application?

Send the Designated Officer a request to amend your application for certification for an engine family if you want to change the emission-related maintenance instructions in a way that could affect emissions. In your request, describe the proposed changes to the maintenance instructions.

(a) If you are decreasing the specified level of maintenance, you may distribute the new maintenance instructions to your customers 30 days after we receive your request, unless we disapprove your request. We may approve a shorter time or waive this requirement.

(b) If your requested change would not decrease the specified level of maintenance, you may distribute the new maintenance instructions anytime after you send your request.

(c) If you are correcting or clarifying your maintenance instructions or if you are changing instructions for maintenance unrelated to emission controls, the requirements of this section do not apply.

§ 1048.225 How do I amend my application to include new or modified engines?

(a) You must amend your application for certification before you take either of the following actions:

(1) Add an engine to a certificate of conformity (this includes any changes you make in selecting emission standards under § 1048.205(m)(1)).

(2) Make a design change for a certified engine family that may affect emissions or an emission-related part over the engine's lifetime.

(b) Send the Designated Officer a request to amend the application for certification for an engine family. In your request, do all of the following:

(1) Describe the engine model or configuration you are adding or changing.

(2) Include engineering evaluations or reasons why the original test engine is or is not still appropriate.

(3) If the original test engine for the engine family is not appropriate to show compliance for the new or modified nonroad engine, include new test data showing that the new or modified nonroad engine meets the requirements of this part.

(c) You may start producing the new or modified nonroad engine anytime after you send us your request. If we determine that the affected engines do not meet applicable requirements, we will require you to cease production of the engines and to recall and correct the engines at no expense to the owner. If you choose to produce engines under this paragraph (c), we will consider that to be consent to recall all engines that we determine do not meet applicable standards or other requirements and to remedy the nonconformity at no expense to the owner.

(d) You must give us test data within 30 days if we ask for more testing, or stop producing the engine if you cannot do this. You may give us an engineering evaluation instead of test data if we agree that you can address our questions without test data.

(e) If we determine that the certificate of conformity would not cover your new or modified nonroad engine, we will send you a written explanation of our decision. In this case, you may no longer produce these engines, though you may ask for a hearing for us to reconsider our decision (see § 1048.820).

§ 1048.230 How do I select engine families?

(a) Divide your product line into families of engines that you expect to have similar emission characteristics. Your engine family is limited to a single model year.

(b) Group engines in the same engine family if they are the same in all of the following aspects:

(1) The combustion cycle.

(2) The cooling system (water-cooled vs. air-cooled).

(3) Configuration of the fuel system (for example, fuel injection vs. carburetion).

(4) Method of air aspiration.

(5) The number, location, volume, and composition of catalytic converters.

(6) The number, arrangement, and approximate bore diameter of cylinders.

(7) Evaporative emission controls.

(c) In some cases you may subdivide a group of engines that is identical

under paragraph (b) of this section into different engine families. To do so, you must show you expect emission characteristics to be different during the useful life or that any of the following engine characteristics are different:

(1) Method of actuating intake and exhaust timing (poppet valve, reed valve, rotary valve, etc.).

(2) Location or size of intake and exhaust valves or ports.

(3) Configuration of the combustion chamber.

(4) Cylinder stroke.

(5) Exhaust system.

(6) Type of fuel.

(d) If your engines are not identical with respect to the things listed in paragraph (b) of this section, but you show that their emission characteristics during the useful life will be similar, we may approve grouping them in the same engine family.

(e) If you cannot appropriately define engine families by the method in this section, we will define them based on features related to emission characteristics.

(f) You may ask us to create separate families for exhaust emissions and evaporative emissions. If we do this, list both families on the emission control information label.

(g) Where necessary, you may divide an engine family into sub-families to meet different emission standards, as specified in § 1048.101(a)(2). For issues related to compliance and prohibited actions, we will generally apply decisions to the whole engine family. For engine labels and other administrative provisions, we may approve your request for separate treatment of sub-families.

§ 1048.235 What emission testing must I perform for my application for a certificate of conformity?

This section describes the emission testing you must perform to show compliance with the emission standards in §§ 1048.101(a) and (b) and 1048.105 during certification. See § 1048.205(s) regarding emission testing related to the field-testing emission standards.

(a) Test your emission-data engines using the procedures and equipment specified in subpart F of this part. For any testing related to evaporative emissions, use good engineering judgment to include a complete fuel system with the engine.

(b) Select engine families according to the following criteria:

(1) For exhaust testing, select from each engine family a test engine for each fuel type with a configuration that is most likely to exceed the exhaust emission standards, using good engineering judgment. Consider the emission levels of all exhaust constituents over the full useful life of the engine when operated in a piece of equipment.

(2) For evaporative testing, select from each engine family a test fuel system for each fuel type with a configuration that is most likely to exceed the evaporative emission standards, using good engineering judgment.

(c) You may use previously generated emission data in either of the following cases:

(1) You may submit emission data for equivalent engine families from previous years instead of doing new tests, but only if the data show that the test engine would meet all the requirements for the latest engine models. We may require you to do new emission testing if we believe the latest engine models could be substantially different from the previously tested engine.

(2) You may submit emission data for equivalent engine families performed to show compliance with other standards (such as California standards) instead of doing new tests, but only if the data show that the test engine would meet all of this part's requirements.

(d) We may choose to measure emissions from any of your test engines (or other engines from the engine family).

(1) If we do this, you must provide the test engine at the location we select. We may decide to do the testing at your plant or any other facility. If we choose to do the testing at your plant, you must schedule it as soon as possible and make available the instruments and equipment we need.

(2) If we measure emissions on one of your test engines, the results of that testing become the official data for the engine. Unless we later invalidate this data, we may decide not to consider

your data in determining if your engine family meets the emission standards.

(3) Before we test one of your engines, we may set its adjustable parameters to any point within the physically adjustable ranges (see § 1048.115(e)).

(4) Calibrate the test engine within normal production tolerances for anything we do not consider an adjustable parameter (see § 1048.205(p)).

§ 1048.240 How do I demonstrate that my engine family complies with exhaust emission standards?

(a) For certification, your engine family is considered in compliance with the numerical emission standards in § 1048.101 (a) and (b), if all emission-data engines representing that family have test results showing emission levels at or below these standards.

(b) Your engine family does not comply if any emission-data engine representing that family has test results showing emission levels above the standards from § 1048.101 (a) and (b) for any pollutant.

(c) To compare emission levels from the test engine with the emission standards, apply deterioration factors to the measured emission levels. The deterioration factor is a number that shows the relationship between exhaust emissions at the end of useful life and at the low-hour test point. Specify the deterioration factors based on emission measurements using four significant figures, consistent with good engineering judgment. For example, deterioration factors must be consistent with emission increases observed from in-use testing with similar engines (*see* subpart E of this part). Small-volume engine manufacturers may use assigned deterioration factors that we establish. Apply the deterioration factors as follows:

(1) For engines that use aftertreatment technology, such as catalytic converters, the deterioration factor is the ratio of exhaust emissions at the end of useful life to exhaust emissions at the low-hour test point. Adjust the official emission results for each tested engine at the selected test point by multiplying the measured emissions by the deterioration factor. If the factor is less than one, use one.

(2) For engines that do not use aftertreatment technology, the deterioration factor is the difference between exhaust emissions at the end of useful life and exhaust emissions at the low-hour test point. Adjust the official emission results for each tested engine at the selected test point by adding the factor to the measured emissions. If the factor is less than zero, use zero.

(d) After adjusting the emission levels for deterioration, round them to the same number of decimal places as the emission standard. Compare the rounded emission levels to the emission standard for each test engine.

§ 1048.245 How do I demonstrate that my engine family complies with evaporative emission standards?

(a) For certification, your engine family is considered in compliance with the evaporative emission standards in subpart B of this part if you do either of the following:

(1) You have test results showing that evaporative emissions in the family are at or below the standards throughout the useful life.

(2) Where applicable, you comply with the design specifications in paragraph (e) of this section.

(b) Your engine family does not comply if any fuel system representing that family has test results showing emission levels above the standards.

(c) Use good engineering judgment to develop a test plan to establish deterioration factors to show how much emissions increase at the end of useful life.

(d) If you adjust the emission levels for deterioration, round them to the same number of decimal places as the emission standard. Compare the rounded emission levels to the emission standard for each test fuel system.

(e) You may demonstrate that your engine family complies with the evaporative emission standards by demonstrating that you use the following control technologies:

(1) For certification to the standards specified in § 1048.105(a)(1), with the following technologies:

(i) Use a tethered or self-closing gas cap on a fuel tank that stays sealed up to a positive pressure of 24.5 kPa (3.5

psig) or a vacuum pressure of 10.5 kPa (1.5 psig).

(ii) [Reserved]

(2) For certification to the standards specified in §1048.105(a)(3), demonstrating that you use design features to prevent fuel boiling under all normal operation. You may do this using fuel temperature data measured during normal operation.

(3) We may establish additional options for design-based certification where we find that new test data demonstrate that a technology will ensure compliance with the emission standards in this section.

§1048.250 What records must I keep and make available to EPA?

(a) Organize and maintain the following records to keep them readily available; we may review these records at any time:

(1) A copy of all applications and any summary information you sent us.

(2) Any of the information we specify in §1048.205 that you did not include in your application.

(3) A detailed history of each emission-data engine. In each history, describe all of the following:

(i) The test engine's construction, including its origin and buildup, steps you took to ensure that it represents production engines, any components you built specially for it, and all emission-related components.

(ii) How you accumulated engine operating hours, including the dates and the number of hours accumulated.

(iii) All maintenance (including modifications, parts changes, and other service) and the dates and reasons for the maintenance.

(iv) All your emission tests, including documentation on routine and standard tests, as specified in part 40 CFR part 1065, and the date and purpose of each test.

(v) All tests to diagnose engine or emission-control performance, giving the date and time of each and the reasons for the test.

(vi) Any other significant events.

(b) Keep data from routine emission tests (such as test cell temperatures and relative humidity readings) for one year after we issue the associated certificate of conformity. Keep all other information specified in paragraph (a) of this section for eight years after we issue your certificate.

(c) Store these records in any format and on any media, as long as you can promptly send us organized, written records in English if we ask for them.

(d) Send us copies of any engine maintenance instructions or explanations if we ask for them.

§1048.255 When may EPA deny, revoke, or void my certificate of conformity?

(a) We may deny your application for certification if your engine family fails to comply with emission standards or other requirements of this part or the Act. Our decision may be based on any information available to us showing you do not meet emission standards or other requirements, including any testing that we conduct under paragraph (f) of this section. If we deny your application, we will explain why in writing.

(b) In addition, we may deny your application or revoke your certificate if you do any of the following:

(1) Refuse to comply with any testing or reporting requirements.

(2) Submit false or incomplete information (paragraph (d) of this section applies if this is fraudulent).

(3) Render inaccurate any test data.

(4) Deny us from completing authorized activities despite our presenting a warrant or court order (see 40 CFR 1068.20).

(5) Produce engines for importation into the United States at a location where local law prohibits us from carrying out authorized activities.

(c) We may void your certificate if you do not keep the records we require or do not give us information when we ask for it.

(d) We may void your certificate if we find that you intentionally submitted false or incomplete information.

(e) If we deny your application or revoke or void your certificate, you may ask for a hearing (see §1048.820). Any such hearing will be limited to substantial and factual issues.

(f) We may conduct confirmatory testing of your engines as part of certification. We may deny your application for certification or revoke your certificate if your engines fail to comply with emission standards or other requirements during confirmatory testing.

Subpart D—Testing Production-line Engines

§ 1048.301 When must I test my production-line engines?

(a) If you produce engines that are subject the requirements of this part, you must test them as described in this subpart.

(b) We may suspend or revoke your certificate of conformity for certain engine families if your production-line engines do not meet the requirements of this part or you do not fulfill your obligations under this subpart (see §§ 1048.325 and 1048.340).

(c) Other requirements apply to engines that you produce. Other regulatory provisions authorize us to suspend, revoke, or void your certificate of conformity, or order recalls for engines families without regard to whether they have passed these production-line testing requirements. The requirements of this part do not affect our ability to do selective enforcement audits, as described in part 1068 of this chapter. Individual engines in families that pass these production-line testing requirements must also conform to all applicable regulations of this part and part 1068 of this chapter.

(d) You may ask to use an alternate program for testing production-line engines. In your request, you must show us that the alternate program gives equal assurance that your production-line engines meet the requirements of this part. If we approve your alternate program, we may waive some or all of this subpart's requirements.

(e) If you certify an engine family with carryover emission data, as described in § 1048.235(c), and these equivalent engine families consistently pass the production-line testing requirements over the preceding two-year period, you may ask for a reduced testing rate for further production-line testing for that family. The minimum testing rate is one engine per engine family. If we reduce your testing rate, we may limit our approval to any number of model years. In determining whether to approve your request, we may consider the number of engines that have failed the emission tests.

(f) We may ask you to make a reasonable number of production-line engines available for a reasonable time so we can test or inspect them for compliance with the requirements of this part.

§ 1048.305 How must I prepare and test my production-line engines?

(a) *Test procedures.* Test your production-line engines using either the steady-state or transient testing procedures in subpart F of this part to show you meet the emission standards in § 1048.101(a) or (b), respectively. We may require you to test engines using the transient testing procedures to show you meet the emission standards in § 1048.101(a).

(b) *Modifying a test engine.* Once an engine is selected for testing (see § 1048.310), you may adjust, repair, prepare, or modify it or check its emissions only if one of the following is true:

(1) You document the need for doing so in your procedures for assembling and inspecting all your production engines and make the action routine for all the engines in the engine family.

(2) This subpart otherwise specifically allows your action.

(3) We approve your action in advance.

(c) *Engine malfunction.* If an engine malfunction prevents further emission testing, ask us to approve your decision to either repair the engine or delete it from the test sequence.

(d) *Setting adjustable parameters.* Before any test, we may adjust or require you to adjust any adjustable parameter to any setting within its physically adjustable range.

(1) We may adjust idle speed outside the physically adjustable range as needed only until the engine has stabilized emission levels (see paragraph (e) of this section). We may ask you for information needed to establish an alternate minimum idle speed.

(2) We may make or specify adjustments within the physically adjustable range by considering their effect on emission levels, as well as how likely it is someone will make such an adjustment with in-use engines.

(e) *Stabilizing emission levels.* Before you test production-line engines, you may operate the engine to stabilize the emission levels. Using good engineering judgment, operate your engines in a way that represents the way production engines will be used. You may operate each engine for no more than the greater of two periods:

(1) 50 hours.

(2) The number of hours you operated your emission-data engine for certifying the engine family (see 40 CFR part 1065, subpart E).

(f) *Damage during shipment.* If shipping an engine to a remote facility for production-line testing makes necessary an adjustment or repair, you must wait until after the after the initial emission test to do this work. We may waive this requirement if the test would be impossible or unsafe, or if it would permanently damage the engine. Report to us, in your written report under § 1048.345, all adjustments or repairs you make on test engines before each test.

(g) *Retesting after invalid tests.* You may retest an engine if you determine an emission test is invalid. Explain in your written report reasons for invalidating any test and the emission results from all tests. If you retest an engine and, within ten days after testing, ask to substitute results of the new tests for the original ones, we will answer within ten days after we receive your information.

§ 1048.310 How must I select engines for production-line testing?

(a) Use test results from two engines for each engine family to calculate the required sample size for the model year. Update this calculation with each test.

(b) Early in each calendar quarter, randomly select and test two engines from the end of the assembly line for each engine family.

(c) Calculate the required sample size for each engine family. Separately calculate this figure for HC+NO_X and for CO. The required sample size is the greater of these two calculated values. Use the following equation:

$$N = \left[\frac{(t_{95} \times \sigma)}{(x - STD)}\right]^2 + 1$$

Where:

N = Required sample size for the model year.

t_{95} = 95% confidence coefficient, which depends on the number of tests completed, n, as specified in the table in paragraph (c)(1) of this section. It defines 95% confidence intervals for a one-tail distribution.

x = Mean of emission test results of the sample.

STD = Emission standard.

σ = Test sample standard deviation (see paragraph (c)(2) of this section).

(1) Determine the 95% confidence coefficient, t_{95}, from the following table:

n	t_{95}	n	t_{95}	n	t_{95}
2	6.31	12	1.80	22	1.72
3	2.92	13	1.78	23	1.72
4	2.35	14	1.77	24	1.71
5	2.13	15	1.76	25	1.71
6	2.02	16	1.75	26	1.71
7	1.94	17	1.75	27	1.71
8	1.90	18	1.74	28	1.70
9	1.86	19	1.73	29	1.70
10	1.83	20	1.73	30+	1.70
11	1.81	21	1.72		

(2) Calculate the standard deviation, σ, for the test sample using the following formula:

$$\sigma = \sqrt{\frac{\sum (X_i - x)^2}{n - 1}}$$

Where:

X_i = Emission test result for an individual engine.

n = The number of tests completed in an engine family.

(d) Use final deteriorated test results to calculate the variables in the equations in paragraph (c) of this section (see § 1048.315(a)).

(e) After each new test, recalculate the required sample size using the updated mean values, standard deviations, and the appropriate 95-percent confidence coefficient.

(f) Distribute the remaining engine tests evenly throughout the rest of the year. You may need to adjust your schedule for selecting engines if the required sample size changes. Continue to randomly select engines from each

engine family; this may involve testing engines that operate on different fuels.

(g) Continue testing any engine family for which the sample mean, x, is greater than the emission standard. This applies if the sample mean for either $HC+NO_X$ or for CO is greater than the emission standard. Continue testing until one of the following things happens:

(1) The sample size, n, for an engine family is greater than the required sample size, N, and the sample mean, x, is less than or equal to the emission standard. For example, if N = 3.1 after the third test, the sample-size calculation does not allow you to stop testing.

(2) The engine family does not comply according to § 1048.325.

(3) You test 30 engines from the engine family.

(4) You test one percent of your projected annual U.S.-directed production volume for the engine family.

(5) You choose to declare that the engine family does not comply with the requirements of this subpart.

(h) If the sample-size calculation allows you to stop testing for a pollutant, you must continue measuring emission levels of that pollutant for any additional tests required under this section. However, you need not continue making the calculations specified in this section for that pollutant. This paragraph (h) does not affect the requirements in section § 1048.320.

(i) You may elect to test more randomly chosen engines than we require. Include these engines in the sample-size calculations.

§ 1048.315 How do I know when my engine family fails the production-line testing requirements?

This section describes the pass/fail criteria for the production-line testing requirements. We apply this criteria on an engine-family basis. See § 1048.320 for the requirements that apply to individual engines that fail a production-line test.

(a) Calculate your test results. Round them to the number of decimal places in the emission standard expressed to one more decimal place.

(1) *Initial and final test results.* Calculate and round the test results for each engine. If you do several tests on an engine, calculate the initial test results, then add them together and divide by the number of tests and round for the final test results on that engine.

(2) *Final deteriorated test results.* Apply the deterioration factor for the engine family to the final test results (see § 1048.240(c)).

(b) Construct the following CumSum Equation for each engine family (for $HC+NO_X$ and for CO emissions):

$$C_i = C_{i-1} + X_i - (STD + 0.25 \times \sigma)$$

Where:

C_i = The current CumSum statistic.

C_{i-1} = The previous CumSum statistic. For the first test, CumSum statistic is 0 (*i.e.* $C_1 = 0$).

X_i = The current emission test result for an individual engine.

STD = Emission standard.

(c) Use final deteriorated test results to calculate the variables in the equation in paragraph (b) of this section (see § 1048.315(a)).

(d) After each new test, recalculate the CumSum statistic.

(e) If you test more than the required number of engines, include the results from these additional tests in the CumSum Equation.

(f) After each test, compare the current CumSum statistic, C_i, to the recalculated Action Limit, H, defined as $H = 5.0 \times \sigma$.

(g) If the CumSum statistic exceeds the Action Limit in two consecutive tests, the engine family fails the production-line testing requirements of this subpart. Tell us within ten working days if this happens.

(h) If you amend the application for certification for an engine family (see § 1048.225), do not change any previous calculations of sample size or CumSum statistics for the model year.

§ 1048.320 What happens if one of my production-line engines fails to meet emission standards?

If you have a production-line engine with final deteriorated test results exceeding one or more emission standards (see § 1048.315(a)), the certificate of conformity is automatically suspended for that failing engine. You must take

the following actions before your certificate of conformity can cover that engine:

(a) Correct the problem and retest the engine to show it complies with all emission standards.

(b) Include in your written report a description of the test results and the remedy for each engine (see § 1048.345).

§ 1048.325 What happens if an engine family fails the production-line requirements?

(a) We may suspend your certificate of conformity for an engine family if it fails under § 1048.315. The suspension may apply to all facilities producing engines from an engine family, even if you find noncompliant engines only at one facility.

(b) We will tell you in writing if we suspend your certificate in whole or in part. We will not suspend a certificate until at least 15 days after the engine family fails. The suspension is effective when you receive our notice.

(c) Up to 15 days after we suspend the certificate for an engine family, you may ask for a hearing (see § 1048.820). If we agree before a hearing that we used erroneous information in deciding to suspend the certificate, we will reinstate the certificate.

(d) Section § 1048.335 specifies steps you must take to remedy the cause of the production-line failure. All the engines you have produced since the end of the last test period are presumed noncompliant and should be addressed in your proposed remedy. We may require you to apply the remedy to engines produced earlier if we determine that the cause of the failure is likely to have affected the earlier engines.

§ 1048.330 May I sell engines from an engine family with a suspended certificate of conformity?

You may sell engines that you produce after we suspend the engine family's certificate of conformity under § 1048.315 only if one of the following occurs:

(a) You test each engine you produce and show it complies with emission standards that apply.

(b) We conditionally reinstate the certificate for the engine family. We may do so if you agree to recall all the affected engines and remedy any noncompliance at no expense to the owner if later testing shows that the engine family still does not comply.

§ 1048.335 How do I ask EPA to reinstate my suspended certificate?

(a) Send us a written report asking us to reinstate your suspended certificate. In your report, identify the reason for noncompliance, propose a remedy for the engine family, and commit to a date for carrying it out. In your proposed remedy include any quality control measures you propose to keep the problem from happening again.

(b) Give us data from production-line testing that shows the remedied engine family complies with all the emission standards that apply.

§ 1048.340 When may EPA revoke my certificate under this subpart and how may I sell these engines again?

(a) We may revoke your certificate for an engine family in the following cases:

(1) You do not meet the reporting requirements.

(2) Your engine family fails to comply with the requirements of this subpart and your proposed remedy to address a suspended certificate under § 1048.325 is inadequate to solve the problem or requires you to change the engine's design or emission-control system.

(b) To sell engines from an engine family with a revoked certificate of conformity, you must modify the engine family and then show it complies with the requirements of this part.

(1) If we determine your proposed design change may not control emissions for the engine's full useful life, we will tell you within five working days after receiving your report. In this case we will decide whether production-line testing will be enough for us to evaluate the change or whether you need to do more testing.

(2) Unless we require more testing, you may show compliance by testing production-line engines as described in this subpart.

(3) We will issue a new or updated certificate of conformity when you have met these requirements.

§ 1048.345 What production-line testing records must I send to EPA?

Do all the following things unless we ask you to send us less information:

(a) Within 30 calendar days of the end of each calendar quarter, send us a report with the following information:

(1) Describe any facility used to test production-line engines and state its location.

(2) State the total U.S.-directed production volume and number of tests for each engine family.

(3) Describe how you randomly selected engines.

(4) Describe your test engines, including the engine family's identification and the engine's model year, build date, model number, identification number, and number of hours of operation before testing for each test engine.

(5) Identify where you accumulated hours of operation on the engines and describe the procedure and schedule you used.

(6) Provide the test number; the date, time and duration of testing; test procedure; initial test results before and after rounding; final test results; and final deteriorated test results for all tests. Provide the emission results for all measured pollutants. Include information for both valid and invalid tests and the reason for any invalidation.

(7) Describe completely and justify any nonroutine adjustment, modification, repair, preparation, maintenance, or test for the test engine if you did not report it separately under this subpart. Include the results of any emission measurements, regardless of the procedure or type of equipment.

(8) Provide the CumSum analysis required in § 1048.315 for each engine family.

(9) Report on each failed engine as described in § 1048.320.

(10) State the date the calendar quarter ended for each engine family.

(b) We may ask you to add information to your written report, so we can determine whether your new nonroad engines conform with the requirements of this subpart.

(c) An authorized representative of your company must sign the following statement:

We submit this report under Sections 208 and 213 of the Clean Air Act. Our production-line testing conformed completely with the requirements of 40 CFR part 1048. We have not changed production processes or quality-control procedures for the engine family in a way that might affect the emission control from production engines. All the information in this report is true and accurate, to the best of my knowledge. I know of the penalties for violating the Clean Air Act and the regulations. (Authorized Company Representative)

(d) Send electronic reports of production-line testing to the Designated Officer using an approved information format. If you want to use a different format, send us a written request with justification for a waiver.

(e) We will send copies of your reports to anyone from the public who asks for them. See § 1048.815 for information on how we treat information you consider confidential.

§ 1048.350 What records must I keep?

(a) Organize and maintain your records as described in this section. We may review your records at any time, so it is important to keep required information readily available.

(b) Keep paper records of your production-line testing for one full year after you complete all the testing required for an engine family in a model year. You may use any additional storage formats or media if you like.

(c) Keep a copy of the written reports described in § 1048.345.

(d) Keep the following additional records:

(1) A description of all test equipment for each test cell that you can use to test production-line engines.

(2) The names of supervisors involved in each test.

(3) The name of anyone who authorizes adjusting, repairing, preparing, or modifying a test engine and the names of all supervisors who oversee this work.

(4) If you shipped the engine for testing, the date you shipped it, the associated storage or port facility, and the date the engine arrived at the testing facility.

(5) Any records related to your production-line tests that are not in the written report.

(6) A brief description of any significant events during testing not otherwise described in the written report or in this section.

(7) Any information specified in § 1048.345 that you do not include in your written reports.

(e) If we ask, you must give us projected or actual production figures for an engine family. We may ask you to divide your production figures by maximum brake power, displacement, fuel type, or assembly plant (if you produce engines at more than one plant).

(f) Keep a list of engine identification numbers for all the engines you produce under each certificate of conformity. Give us this list within 30 days if we ask for it.

(g) We may ask you to keep or send other information necessary to implement this subpart.

Subpart E—Testing In-use Engines

§ 1048.401 What testing requirements apply to my engines that have gone into service?

(a) If you produce engines that are subject to the requirements of this part, you must test them as described in this subpart. This generally involves testing engines in the field or removing them for measurement in a laboratory.

(b) We may approve an alternate plan for showing that in-use engines comply with the requirements of this part if one of the following is true:

(1) You produce 200 or fewer engines per year in the selected engine family.

(2) Removing the engine from most of the applications for that engine family causes significant, irreparable damage to the equipment.

(3) You identify a unique aspect of your engine applications that keeps you from doing the required in-use testing.

(c) We may void your certificate of conformity for an engine family if you do not meet your obligations under this part.

(d) Independent of your responsibility to test in-use engines, we may choose at any time to do our own testing of your in-use engines.

(e) If in-use testing shows that engines fail to meet emission standards or other requirements of this part, we may pursue a recall or other remedy as allowed by the Act (see § 1048.415).

§ 1048.405 How does this program work?

(a) You must test in-use engines, for exhaust emissions, from the families we select. We may select up to 25 percent of your engine families in any model year—or one engine family if you have three or fewer families. We will select engine families for testing before the end of the model year. When we select an engine family for testing, we may specify that you preferentially test engines based on fuel type or equipment type. In addition, we may identify specific modes of operation or sampling times. You may choose to test additional engine families that we do not select.

(b) Send us an in-use testing plan within 12 calendar months after we direct you to test a particular engine family. Complete the testing within 24 calendar months after we approve your plan.

(c) You may need to test engines from more than one model year at a given time.

§ 1048.410 How must I select, prepare, and test my in-use engines?

(a) You may make arrangements to select representative test engines from your own fleet or from other independent sources.

(b) For the selected engine families, select engines that you or your customers have—

(1) Operated for at least 50 percent of the engine family's useful life (see § 1048.101(d));

(2) Not maintained or used in an abnormal way; and

(3) Documented in terms of total hours of operation, maintenance, operating conditions, and storage.

(c) Use the following methods to determine the number of engines you must test in each engine family:

(1) Test at least two engines if you produce 2,000 or fewer engines in the model year from all engine families, or if you produce 500 or fewer engines from the selected engine family. Otherwise, test at least four engines.

(2) If you successfully complete an in-use test program on an engine family

and later certify an equivalent engine family with carryover emission data, as described in § 1048.235(c), then test at least one engine instead of the testing rates in paragraph (c)(1) of this section.

(3) If you test the minimum required number of engines and all comply fully with emission standards, you may stop testing.

(4) For each engine that fails any applicable standard, test two more. Regardless of measured emission levels, you do not have to test more than ten engines in an engine family. You may do more tests than we require.

(5) You may concede that the engine family does not comply before testing a total of ten engines.

(d) You may do minimal maintenance to set components of a test engine to specifications for anything we do not consider an adjustable parameter (see § 1048.205(p)). Limit maintenance to what is in the owner's instructions for engines with that amount of service and age. Document all maintenance and adjustments.

(e) Do at least one valid exhaust emission test for each test engine.

(f) For a test program on an engine family, choose one of the following methods to test your engines:

(1) Remove the selected engines for testing in a laboratory. Use the applicable steady-state and transient procedures in subpart F of this part to show compliance with the duty-cycle standards in § 1048.101(a) and (b). We may direct you to measure emissions on the dynamometer using the supplemental test procedures in § 1048.515 to show compliance with the field-testing standards in § 1048.101(c).

(2) Test the selected engines while they remain installed in the equipment. Use the field testing procedures in subpart F of this part. Measure emissions during normal operation of the equipment to show compliance with the field-testing standards in § 1048.101(c). We may direct you to include specific areas of normal operation.

(g) You may ask us to waive parts of the prescribed test procedures if they are not necessary to determine in-use compliance.

(h) Calculate the average emission levels for an engine family from the results for the set of tested engines. Round them to the number of decimal places in the emission standards expressed to one more decimal place.

§ 1048.415 What happens if in-use engines do not meet requirements?

(a) Determine the reason each in-use engine exceeds the emission standards.

(b) If the average emission levels calculated in § 1048.410(h) exceed any of the emission standards that apply, notify us within fifteen days of completing testing on this family. Otherwise follow the reporting instructions in § 1048.420.

(c) We will consider failure rates, average emission levels, and any defects—among other things—to decide on taking remedial action under this subpart (see 40 CFR 1068.505). We may consider the results from any voluntary additional testing you conduct. We may also consider information related to testing from other engine families showing that you designed them to exceed the minimum requirements for controlling emissions. We may order a recall before or after you complete testing of an engine family if we determine a substantial number of engines do not conform to section 213 of the Act or to this part.

(d) If in-use testing reveals a design or manufacturing defect that prevents engines from meeting the requirements of this part, you must correct the defect as soon as possible for any future production for engines in every family affected by the defect.

(e) You may voluntarily recall an engine family for emission failures, as described in 40 CFR 1068.535, unless we have ordered a recall for that family under 40 CFR 1068.505.

(f) You have the right to a hearing before we order you to recall your engines or implement an alternative remedy (see § 1048.820).

§ 1048.420 What in-use testing information must I report to EPA?

(a) In a report to us within three months after you finish testing an engine family, do all the following:

(1) Identify the engine family, model, serial number, and date of manufacture.

(2) For each engine inspected or considered for testing, identify whether the diagnostic system was functioning.

(3) Describe the specific reasons for disqualifying any engines for not being properly maintained or used.

(4) For each engine selected for testing, include the following information:

(i) Estimate the hours each engine was used before testing.

(ii) Describe all maintenance, adjustments, modifications, and repairs to each test engine.

(5) State the date and time of each test attempt.

(6) Include the results of all emission testing, including incomplete or invalidated tests, if any.

(b) Send electronic reports of in-use testing to the Designated Officer using an approved information format. If you want to use a different format, send us a written request with justification for a waiver.

(c) We will send copies of your reports to anyone from the public who asks for them. See § 1048.815 for information on how we treat information you consider confidential.

(d) We may ask for more information.

§ 1048.425 What records must I keep?

(a) Organize and maintain your records as described in this section. We may review your records at any time, so it is important to keep required information readily available.

(b) Keep paper records of your in-use testing for one full year after you complete all the testing required for an engine family in a model year. You may use any additional storage formats or media if you like.

(c) Keep a copy of the written reports described in § 1048.420.

(d) Keep any additional records related to the procurement process.

Subpart F—Test Procedures

§ 1048.501 What procedures must I use to test my engines?

(a) Use the equipment and procedures for spark-ignition engines in 40 CFR part 1065 to show your engines meet the duty-cycle emission standards in § 1048.101(a) and (b). Measure HC, NO_X, CO, and CO_2 emissions using the full-flow dilute sampling procedures in 40 CFR part 1065. Use the applicable duty cycles in §§ 1048.505 and 1048.510.

(b) We describe in § 1048.515 the supplemental procedures for showing that your engines meet the field-testing emission standards in § 1048.101(c).

(c) Use the fuels specified in 40 CFR part 1065, subpart C, for all the testing we require in this part, except as noted in § 1048.515. Use these test fuels or any commercially available fuel for service accumulation.

(d) To test engines for evaporative emissions, use the equipment and procedures specified for testing diurnal emissions in 40 CFR 86.107–96 and 86.133–96 with fuel meeting the specifications in 40 CFR part 1065, subpart C. Measure emissions from a test engine with a complete fuel system. Reported emission levels must be based on the highest emissions from three successive 24-hour periods of cycling temperatures. Note that you may not be required to test for evaporative emissions during certification if you certify by design, as specified in § 1048.245.

(e) You may use special or alternate procedures, as described in 40 CFR 1065.10.

(f) We may reject data you generate using alternate procedures if later testing with the procedures in 40 CFR part 1065 shows contradictory emission data.

§ 1048.505 What steady-state duty cycles apply for laboratory testing?

(a) Measure emissions by testing the engine on a dynamometer with one or more of the following sets of steady-state duty cycles to show that the engine meets the steady-state standards in § 1048.101(b):

(1) Use the 7-mode duty cycle described in the following table for engines from an engine family that will be used only in variable-speed applications:

TABLE 1 OF § 1048.505—7-MODE DUTY CYCLE [1]

Mode No.	Engine speed	Observed torque [2]	Minimum time in mode (minutes)	Weighting factors
1	Maximum test speed	25	3.0	0.06
2	Intermediate test speed	100	3.0	0.02
3	Intermediate test speed	75	3.0	0.05
4	Intermediate test speed	50	3.0	0.32
5	Intermediate test speed	25	3.0	0.30
6	Intermediate test speed	10	3.0	0.10
7	Idle	0	3.0	0.15

[1] This duty cycle is analogous to the C2 cycle specified in ISO 8178–4.
[2] The percent torque is relative to the maximum torque at the given engine speed.

(2) Use the 5-mode duty cycle described in the following table if you certify an engine family for operation only at a single, rated speed:

TABLE 2 OF § 1048.505—5-MODE DUTY CYCLE FOR CONSTANT-SPEED ENGINES [1]

Mode No.	Engine speed	Torque [2]	Minimum time in mode (minutes)	Weighting factors
1	Maximum test	100	3.0	0.05
2	Maximum test	75	3.0	0.25
3	Maximum test	50	3.0	0.30
4	Maximum test	25	3.0	0.30
5	Maximum test	10	3.0	0.10

[1] This duty cycle is analogous to the D2 cycle specified in ISO 8178–4.
[2] The percent torque is relative to the maximum torque at maximum test speed.

(3) Use both of the duty cycles described in paragraphs (a)(1) and (a)(2) of this section if you will not restrict an engine family to constant-speed or variable-speed applications.

(4) Use only the duty cycle specified in paragraph (a)(2) of this section for all severe-duty engines.

(5) Use the 2-mode duty cycle described in the following table for high-load engines instead of the other duty cycles in this paragraph (a):

TABLE 3 OF § 1048.505—2-MODE DUTY CYCLE FOR HIGH-LOAD ENGINES [1]

Mode No.	Engine speed	Torque [2]	Minimum time in mode (minutes)	Weighting factors
1	Maximum test	100	3.0	0.50
2	Maximum test	75	3.0	0.50

[1] This duty cycle is derived from the D1 cycle specified in ISO 8178–4.
[2] The percent torque is relative to the maximum torque at maximum test speed.

(b) If we test an engine to confirm that it meets the duty-cycle emission standards, we will use the steady-state duty cycles that apply for that engine family.

(c) During idle mode, operate the engine with the following parameters:

(1) Hold the speed within your specifications.

(2) Keep the throttle at the idle-stop position.

(3) Keep engine torque under 5 percent of the peak torque value at maximum test speed.

(d) For the full-load operating mode, operate the engine at wide-open throttle.

(e) See 40 CFR part 1065 for detailed specifications of tolerances and calculations.

(f) In the normal test sequence described in 40 CFR part 1065, subpart F, steady-state testing generally follows the transient test. For those cases where we do not require transient testing, perform the steady-state test after an appropriate warm-up period, consistent with good engineering judgment.

§ 1048.510 What transient duty cycles apply for laboratory testing?

(a) Starting with the 2007 model year, measure emissions by testing the engine on a dynamometer with one of the following transient duty cycles to show that the engine meets the transient emission standards in § 1048.101(a):

(1) If you certify an engine family for constant-speed operation only, use the transient duty-cycle described in Appendix I of this part.

(2) For all other engines, use the transient duty-cycle described in Appendix II of this part.

(b) If we test an engine to confirm that it meets the duty-cycle emission standards, we will use the transient duty cycle that applies for that engine family.

(c) Warm up the test engine as follows:

(1) Operate the engine for the first 180 seconds of the appropriate duty cycle, then allow it to idle without load for 30 seconds. At the end of the 30-second idling period, start measuring emissions as the engine operates over the prescribed duty cycle. For severe-duty engines, this engine warm-up procedure may include up to 15 minutes of operation over the appropriate duty cycle.

(2) If the engine was already operating before a test, use good engineering judgment to let the engine cool down enough so measured emissions during the next test will accurately represent those from an engine starting at room temperature. For example, if an engine starting at room temperature warms up enough in three minutes to start closed-loop operation and achieve full catalyst activity, then minimal engine cooling is necessary before starting the next test.

(3) You are not required to measure emissions while the engine is warming up. However, you must design your emission-control system to start working as soon as possible after engine starting. In your application for certification, describe how your engine meets this objective (see § 1048.205(b)).

§ 1048.515 Field-testing procedures.

(a) This section describes the procedures to determine whether your engines meet the field-testing emission standards in § 1048.101(c). These procedures may include any normal engine operation and ambient conditions that the engines may experience in use. Paragraph (b) of this section defines the limits of what we will consider normal engine operation and ambient conditions. Use the test procedures we specify in § 1048.501, except for the provisions we specify in this section. Measure emissions with one of the following procedures:

(1) Remove the selected engines for testing in a laboratory. You can use an engine dynamometer to simulate normal operation, as described in this section.

(2) Test the selected engines while they remain installed in the equipment. In 40 CFR part 1065, subpart J, we describe the equipment and sampling methods for testing engines in the field. Use fuel meeting the specifications of 40 CFR 1065.210 or a fuel typical of what you would expect the engine to use in service.

(b) An engine's emissions may not exceed the levels we specify in § 1048.101(c) for any continuous sampling period of at least 120 seconds under the following ranges of operation and operating conditions:

(1) Engine operation during the emission sampling period may include any normal operation, subject to the following restrictions:

(i) Average power must be over 5 percent of maximum brake power.

(ii) Continuous time at idle must not be greater than 120 seconds.

(iii) The sampling period may not begin until the engine has reached stable operating temperatures. For example, this would exclude engine operation after starting until the thermostat starts modulating coolant temperature.

(iv) The sampling period may not include engine starting.

(v) For engines that qualify for the alternate Tier 2 emission standards in § 1048.101(d), operation at 90 percent or more of maximum power must be less than 10 percent of the total sampling time. You may request our approval for a different power threshold.

(2) Engine testing may occur under any normal conditions without correcting measured emission levels, subject to the following restrictions:

(i) Barometric pressure must be between 80.0 and 103.3 kPa (600 and 775 mm Hg).

(ii) Ambient air temperature must be between 13° and 35 °C.

Subpart G—Compliance Provisions

§ 1048.601 What compliance provisions apply to these engines?

Engine and equipment manufacturers, as well as owners, operators, and rebuilders of these engines, and all other persons, must observe the requirements and prohibitions in 40 CFR part 1068 and the requirements of the Act. The compliance provisions in this subpart apply only to the engines we regulate in this part.

§ 1048.605 What are the provisions for exempting engines from the requirements of this part if they are already certified under the motor-vehicle program?

(a) This section applies to you if you are an engine manufacturer. See § 1048.610 if you are not an engine manufacturer.

(b) The only requirements or prohibitions from this part that apply to an engine that is exempt under this section are in this section.

(c) If you meet all the following criteria and requirements regarding your new nonroad engine, it is exempt under this section:

(1) You must produce it by modifying an engine covered by a valid certificate of conformity under 40 CFR part 86.

(2) Do not make any changes to the certified engine that we could reasonably expect to increase its exhaust or evaporative emissions. For example, if you make any of the following changes to one of these engines, you do not qualify for this exemption:

(i) Change any fuel system or evaporative system parameters from the certified configuration (this does not apply to refueling emission controls).

(ii) Change any other emission-related components.

(iii) Modify or design the engine cooling system so that temperatures or heat rejection rates are outside the original engine manufacturer's specified ranges.

(3) Demonstrate that fewer than 50 percent of the engine model's total sales, from all companies, are used in nonroad applications.

(4) The engine must have the label we require under 40 CFR part 86.

(5) Add a permanent supplemental label to the engine in a position where it will remain clearly visible after installation in the equipment. In your engine's emission control information label, do the following:

(i) Include the heading: ''Nonroad Engine Emission Control Information''.

(ii) Include your full corporate name and trademark.

(iii) State: ''THIS ENGINE WAS ADAPTED FOR NONROAD USE WITHOUT AFFECTING ITS EMISSION CONTROLS.''.

(iv) State the date you finished modifying the engine (month and year).

(6) The original and supplemental labels must be readily visible after the engine is installed in the equipment or, if the equipment obscures the engine's emission control information label, the equipment manufacturer must attach duplicate labels, as described in 40 CFR 1068.105.

(7) Send the Designated Officer a signed letter by the end of each calendar year (or less often if we tell you) with all the following information:

(i) Identify your full corporate name, address, and telephone number.

(ii) List the engine models you expect to produce under this exemption in the coming year.

(iii) State: ''We produce each listed engine model for nonroad application without making any changes that could increase its certified emission levels, as described in 40 CFR 1048.605.''.

(d) If your engines do not meet the criteria listed in paragraph (c) of this section, they will be subject to the standards and prohibitions of this part. Producing these engines without a valid exemption or certificate of conformity would violate the prohibitions in 40 CFR 1068.101.

(e) If you are the original engine manufacturer of both the highway and nonroad versions of an exempted engine, you must send us emission test data on the applicable nonroad duty cycle(s). You may include the data in your application for certification or in your letter requesting the exemption.

(f) If you are the original engine manufacturer of an exempted engine that is modified by another company under this exemption, we may require you to send us emission test data on the applicable nonroad duty cycle(s). If we ask for this data, we will allow a reasonable amount of time to collect it.

(g) The engine exempted under this section must meet all applicable requirements from 40 CFR part 86. This applies to engine manufacturers, equipment manufacturers who use these engines, and all other persons as if these engines were used in a motor vehicle.

§ 1048.610 What are the provisions for producing nonroad equipment with engines already certified under the motor-vehicle program?

If you are not an engine manufacturer, you may produce nonroad equipment from complete or incomplete motor vehicles with the motor vehicle engine if you meet three criteria:

(a) The engine or vehicle is certified to 40 CFR part 86.

(b) The engine is not adjusted outside the engine manufacturer's specifications (see § 1048.605(c)(2)).

(c) The engine or vehicle is not modified in any way that may affect its emission control. This applies to exhaust and evaporative emission controls, but not refueling emission controls.

§ 1048.615 What are the provisions for exempting engines designed for lawn and garden applications?

This section is intended for engines designed for lawn and garden applications, but it applies to any engines meeting the size criteria in paragraph (a) of this section.

(a) If an engine meets all the following criteria, it is exempt from the requirements of this part:

(1) The engine must have a total displacement of 1,000 cc or less.

(2) The engine must have a maximum brake power of 30 kW or less.

(3) The engine must be in an engine family that has a valid certificate of conformity showing that it meets emission standards for Class II engines under 40 CFR part 90.

(b) The only requirements or prohibitions from this part that apply to an engine that meets the criteria in paragraph (a) of this section are in this section.

(c) If your engines do not meet the criteria listed in paragraph (a) of this section, they will be subject to the provisions of this part. Producing these engines without a valid exemption or certificate of conformity would violate the prohibitions in 40 CFR 1068.101.

(d) Engines exempted under this section are subject to all the requirements affecting engines under 40 CFR part 90. The requirements and restrictions of 40 CFR part 90 apply to anyone manufacturing these engines, anyone manufacturing equipment that uses these engines, and all other persons in the same manner as if these engines had a total maximum brake power at or below 19 kW.

§ 1048.620 What are the provisions for exempting large engines fueled by natural gas?

(a) If an engine meets all the following criteria, it is exempt from the requirements of this part:

(1) The engine must operate solely on natural gas.

(2) The engine must have maximum brake power 250 kW or higher.

(3) The engine must be in an engine family that has a valid certificate of conformity showing that it meets

emission standards for engines of that power rating under 40 CFR part 89.

(b) The only requirements or prohibitions from this part that apply to an engine that is exempt under this section are in this section.

(c) If your engines do not meet the criteria listed in paragraph (a) of this section, they will be subject to the provisions of this part. Producing these engines without a valid exemption or certificate of conformity would violate the prohibitions in 40 CFR 1068.101.

(d) Engines exempted under this section are subject to all the requirements affecting engines under 40 CFR part 89. The requirements and restrictions of 40 CFR part 89 apply to anyone manufacturing these engines, anyone manufacturing equipment that uses these engines, and all other persons in the same manner as if these were nonroad diesel engines.

(e) You may request an exemption under this section by submitting an application for certification for the engines under 40 CFR part 89.

§ 1048.625 What special provisions apply to engines using noncommercial fuels?

If you are unable to meet this part's requirements with engines using noncommercial fuels (such as unrefined natural gas released by oil wells), the following provisions apply for those engines:

(a) Create a separate engine family.

(b) Disregard the limits on adjustable parameters in § 1048.115(e), but make sure the engines meet emission standards with normal settings when the engine is using fuel meeting the specifications of 40 CFR part 1065, subpart C.

(c) Add the following information to the emission control information label specified in § 1048.135:

(1) Include instructions describing how to adjust the engine to operate in a way that maintains the effectiveness of the emission-control system.

(2) State: ''THIS ENGINE IS CERTIFIED TO OPERATE IN APPLICATIONS USING NONCOMMERCIAL FUEL. USING IT IN AN APPLICATION INVOLVING ONLY COMMERCIAL FUELS MAY BE A VIOLATION OF FEDERAL LAW SUBJECT TO CIVIL PENALTY.''.

(d) Keep records to document the destinations and quantities of engines produced under this section.

Subpart H [Reserved]

Subpart I—Definitions and Other Reference Information

§ 1048.801 What definitions apply to this part?

The following definitions apply to this part. The definitions apply to all subparts unless we note otherwise. All undefined terms have the meaning the Act gives to them. The definitions follow:

Act means the Clean Air Act, as amended, 42 U.S.C. 7401 *et seq.*

Adjustable parameter means any device, system, or element of design that someone can adjust (including those which are difficult to access) and that, if adjusted, may affect emissions or engine performance during emission testing or normal in-use operation. You may ask us to exclude a parameter that is difficult to access if it cannot be adjusted to affect emissions without significantly degrading performance, or if you otherwise show us that it will not be adjusted in a way that affects emissions during in-use operation.

Aftertreatment means relating to any system, component, or technology mounted downstream of the exhaust valve or exhaust port whose design function is to reduce exhaust emissions.

Aircraft means any vehicle capable of sustained air travel above treetop heights.

All-terrain vehicle has the meaning we give in 40 CFR 1051.801.

Auxiliary emission-control device means any element of design that senses temperature, engine rpm, motive speed, transmission gear, atmospheric pressure, manifold pressure or vacuum, or any other parameter to activate, modulate, delay, or deactivate the operation of any part of the emission-control system. This also includes any other feature that causes in-use emissions to be higher than those measured under test conditions, except as we allow under this part.

Blue Sky Series engine means an engine meeting the requirements of § 1048.140.

Brake power means the usable power output of the engine, not including power required to operate fuel pumps, oil pumps, or coolant pumps.

Broker means any entity that facilitates a trade of emission credits between a buyer and seller.

Calibration means the set of specifications and tolerances specific to a particular design, version, or application of a component or assembly capable of functionally describing its operation over its working range.

Certification means obtaining a certificate of conformity for an engine family that complies with the emission standards and requirements in this part.

Compression-ignition means relating to a type of reciprocating, internal-combustion engine that is not a spark-ignition engine.

Constant-speed engine means an engine governed to operate at a single speed.

Crankcase emissions means airborne substances emitted to the atmosphere from any part of the engine crankcase's ventilation or lubrication systems. The crankcase is the housing for the crankshaft and other related internal parts.

Designated Officer means the Manager, Engine Programs Group (6405–J), U.S. Environmental Protection Agency, 1200 Pennsylvania Ave., Washington, DC 20460.

Emission-control system means any device, system, or element of design that controls or reduces the regulated emissions from an engine.

Emission-data engine means an engine that is tested for certification.

Emission-related maintenance means maintenance that substantially affects emissions or is likely to substantially affect emissions deterioration.

Engine family means a group of engines with similar emission characteristics, as specified in § 1048.230.

Engine manufacturer means the manufacturer of the engine. See the definition of ''manufacturer'' in this section.

Fuel system means all components involved in transporting, metering, and mixing the fuel from the fuel tank to the combustion chamber(s), including the fuel tank, fuel tank cap, fuel pump, fuel filters, fuel lines, carburetor or fuel-injection components, and all fuel-system vents.

Good engineering judgment has the meaning we give in 40 CFR 1068.5.

High-cost warranted part means a component covered by the emission-related warranty with a replacement cost (at the time of certification) exceeding $400 (in 1998 dollars). Adjust this value using the most recent annual average consumer price index information published by the U.S. Bureau of Labor Statistics. For this definition, replacement cost includes the retail cost of the part plus labor and standard diagnosis.

High-load engine means an engine for which the engine manufacturer can provide clear evidence that operation below 75 percent of maximum load in it's final application will be rare.

Hydrocarbon (HC) means the hydrocarbon group on which the emission standards are based for each fuel type. For gasoline- and LPG-fueled engines, HC means total hydrocarbon (THC). For natural gas-fueled engines, HC means nonmethane hydrocarbon (NMHC). For alcohol-fueled engines, HC means total hydrocarbon equivalent (THCE).

Identification number means a unique specification (for example, model number/serial number combination) that allows someone to distinguish a particular engine from other similar engines.

Intermediate test speed has the meaning we give in 40 CFR 1065.515.

Manufacturer has the meaning given in section 216(1) of the Act. In general, this term includes any person who manufactures an engine, vehicle, or piece of equipment for sale in the United States or otherwise introduces a new nonroad engine into commerce in the United States. This includes importers who import engines, equipment, or vehicles for resale.

Marine engine means an engine that someone installs or intends to install on a marine vessel. There are two kinds of marine engines:

(1) *Propulsion marine engine* means a marine engine that moves a vessel

through the water or directs the vessel's movement.

(2) *Auxiliary marine engine* means a marine engine not used for propulsion.

Marine vessel means a vehicle that is capable of operation in water but is not capable of operation out of water. Amphibious vehicles are not marine vessels.

Maximum brake power means the maximum brake power an engine produces at maximum test speed.

Maximum test speed has the meaning we give in 40 CFR 1065.515.

Maximum test torque has the meaning we give in 40 CFR 1065.1001.

Model year means one of the following things:

(1) For freshly manufactured engines (see definition of ''new nonroad engine,'' paragraph (1)), model year means one of the following:

(i) Calendar year.

(ii) Your annual new model production period if it is different than the calendar year. This must include January 1 of the calendar year for which the model year is named. It may not begin before January 2 of the previous calendar year and it must end by December 31 of the named calendar year.

(2) For an engine that is converted to a nonroad engine after being placed into service in a motor vehicle, model year means the calendar year in which the engine was originally produced (see definition of ''new nonroad engine,'' paragraph (2)).

(3) For a nonroad engine excluded under § 1048.5 that is later converted to operate in an application that is not excluded, model year means the calendar year in which the engine was originally produced (see definition of ''new nonroad engine,'' paragraph (3)).

(4) For engines that are not freshly manufactured but are installed in new nonroad equipment, model year means the calendar year in which the engine is installed in the new nonroad equipment. This installation date is based on the time that final assembly of the equipment is complete (see definition of ''new nonroad engine,'' paragraph (4)).

(5) For an engine modified by an importer (not the original engine manufacturer) who has a certificate of conformity for the imported engine (see definition of ''new nonroad engine,'' paragraph (5)), model year means one of the following:

(i) The calendar year in which the importer finishes modifying and labeling the engine.

(ii) Your annual production period for producing engines if it is different than the calendar year; follow the guidelines in paragraph (1)(ii) of this definition.

(6) For an engine you import that does not meet the criteria in paragraphs (1) through (5) of the definition of ''new nonroad engine,'' model year means the calendar year in which the engine manufacturer completed the original assembly of the engine. In general, this applies to used equipment that you import without conversion or major modification.

Motor vehicle has the meaning we give in 40 CFR 85.1703(a). In general, *motor vehicle* means a self-propelled vehicle that can transport one or more people or any material, but doesn't include any of the following:

(1) Vehicles having a maximum ground speed over level, paved surfaces no higher than 40 km per hour (25 miles per hour).

(2) Vehicles that lack features usually needed for safe, practical use on streets or highways—for example, safety features required by law, a reverse gear (except for motorcycles), or a differential.

(3) Vehicles whose operation on streets or highways would be unsafe, impractical, or highly unlikely. Examples are vehicles with tracks instead of wheels, very large size, or features associated with military vehicles, such as armor or weaponry.

New nonroad engine means any of the following things:

(1) A freshly manufactured nonroad engine for which the ultimate buyer has never received the equitable or legal title. This kind of vehicle might commonly be thought of as ''brand new.'' In the case of this paragraph (1), the engine is no longer new when the ultimate buyer receives this title or the product is placed into service, whichever comes first.

(2) An engine originally manufactured as a motor vehicle engine that is later intended to be used in a piece of

nonroad equipment. In this case, the engine is no longer a motor vehicle engine and becomes a ''new nonroad engine''. The engine is no longer new when it is placed into nonroad service.

(3) A nonroad engine that has been previously placed into service in an application we exclude under §1048.5, where that engine is installed in a piece of equipment for which these exclusions do not apply. The engine is no longer new when it is placed into nonroad service. For example, this would apply to a stationary engine that is no longer used in a stationary application.

(4) An engine not covered by paragraphs (1) through (3) of this definition that is intended to be installed in new nonroad equipment. The engine is no longer new when the ultimate buyer receives a title for the equipment or the product is placed into service, whichever comes first. This generally includes installation of used engines in new equipment.

(5) An imported nonroad engine covered by a certificate of conformity issued under this part, where someone other than the original engine manufacturer modifies the engine after its initial assembly and holds the certificate. The engine is no longer new when it is placed into nonroad service.

(6) An imported nonroad engine that is not covered by a certificate of conformity issued under this part at the time of importation. This addresses uncertified engines and vehicles that have been placed into service in other countries and that someone seeks to import into the United States. Importation of this kind of new nonroad engine (or vehicle containing such an engine) is generally prohibited by 40 CFR part 1068.

New nonroad equipment means either of the following things:

(1) A nonroad vehicle or other piece of equipment for which the ultimate buyer has never received the equitable or legal title. The product is no longer new when the ultimate buyer receives this title or the product is placed into service, whichever comes first.

(2) An imported nonroad piece of equipment with an engine not covered by a certificate of conformity issued under this part at the time of importation and manufactured after the date for applying the requirements of this part.

Noncommercial fuel means a fuel that is not marketed or sold as a commercial product. For example, this includes methane produced and released from landfills or oil wells.

Noncompliant engine means an engine that was originally covered by a certificate of conformity, but is not in the certified configuration or otherwise does not comply with the conditions of the certificate.

Nonconforming engine means an engine not covered by a certificate of conformity that would otherwise be subject to emission standards.

Nonmethane hydrocarbon means the difference between the emitted mass of total hydrocarbons and the emitted mass of methane.

Nonroad means relating to nonroad engines or equipment that includes nonroad engines.

Nonroad engine has the meaning given in 40 CFR 1068.30. In general this means all internal-combustion engines except motor vehicle engines, stationary engines, or engines used solely for competition. This part does not apply to all nonroad engines (see §1048.5).

Off-highway motorcycle has the meaning we give in 40 CFR 1051.801. (Note: highway motorcycles are regulated under 40 CFR part 86.)

Oxides of nitrogen has the meaning given it in 40 CFR part 1065

Placed into service means used for its intended purpose.

Point of first retail sale means the location at which the retail sale occurs. This generally means a dealership.

Revoke means to discontinue the certificate for an engine family. If we revoke a certificate, you must apply for a new certificate before continuing to produce the affected vehicles or engines. This does not apply to vehicles or engines you no longer possess.

Round means to round numbers according to ASTM E29–02 (incorporated by reference in §1048.810), unless otherwise specified.

Scheduled maintenance means adjusting, repairing, removing, disassembling, cleaning, or replacing components or systems that is periodically

needed to keep a part from failing or malfunctioning. It also may mean actions you expect are necessary to correct an overt indication of failure or malfunction for which periodic maintenance is not appropriate.

Severe-duty application includes concrete saws, concrete pumps, and any other application where an engine manufacturer can provide clear evidence that the majority of installations need air-cooled engines as a result of operation in a severe-duty environment.

Severe-duty engine means an engine from an engine family in which the majority of engines are installed in severe-duty applications.

Small-volume engine manufacturer means a company with fewer than 200 employees. This includes any employees working for parent or subsidiary companies.

Snowmobile has the meaning we give in 40 CFR 1051.801.

Spark-ignition means relating to a gasoline-fueled engine or any other type of engine with a spark plug (or other sparking device) and with operating characteristics significantly similar to the theoretical Otto combustion cycle. Spark-ignition engines usually use a throttle to regulate intake air flow to control power during normal operation.

Stationary engine means an internal combustion engine that is neither a nonroad engine, nor a motor-vehicle engine, nor an engine used solely for competition (see the definition of nonroad engine in 40 CFR 1068.30). In general this includes fixed engines and all portable or transportable engines that stay in a single site at a building, structure, facility, or installation for at least a full year; this does not include an engine installed in equipment that has the ability to propel itself. For year-round sources, a full year is 12 consecutive months. For seasonal sources, a full year is a full annual operating period of at least three months. A seasonal source is a site with engines operating only part of the year for at least two consecutive years. If you replace an engine with one that does the same or similar work in the same place, you may apply the previous engine's service to your calculation for residence time. If you move a stationary engine anytime in its life after it has been in place for at least a full year, it becomes a nonroad engine subject to emission standards unless it stays at the new location for a full year.

Stoichiometry means the proportion of a mixture of air and fuel such that the fuel is fully oxidized with no remaining oxygen. For example, stoichiometric combustion in gasoline engines typically occurs at an air-fuel mass ratio of about 14.7.

Suspend means to temporarily discontinue the certificate for an engine family. If we suspend a certificate, you may not sell vehicles or engines from that engine family unless we reinstate the certificate or approve a new one.

Test engine means an engine in a test sample.

Test sample means the collection of engines selected from the population of an engine family for emission testing.

Total hydrocarbon means the combined mass organic compounds measured by our total hydrocarbon test procedure, expressed as a hydrocarbon with a hydrogen-to-carbon mass ratio of 1.85:1.

Total hydrocarbon equivalent means the sum of the carbon mass contributions of non-oxygenated hydrocarbons, alcohols and aldehydes, or other organic compounds that are measured separately as contained in a gas sample, expressed as petroleum-fueled engine hydrocarbons. The hydrogen-to-carbon ratio of the equivalent hydrocarbon is 1.85:1.

Tier 1 means relating to the emission standards and other requirements that apply beginning with the 2004 model year.

Tier 2 means relating to the emission standards and other requirements that apply beginning with the 2007 model year.

Ultimate buyer means ultimate purchaser.

Ultimate purchaser means, with respect to any new nonroad equipment or new nonroad engine, the first person who in good faith purchases such new nonroad equipment or new nonroad engine for purposes other than resale.

United States means the States, the District of Columbia, the Commonwealth of Puerto Rico, the Commonwealth of the Northern Mariana Islands, Guam, American Samoa, the U.S. Virgin Islands, and the Trust Territory of the Pacific Islands.

Upcoming model year means for an engine family the model year after the one currently in production.

U.S.-directed production volume means the number of engine units, subject to the requirements of this part, produced by a manufacturer for which the manufacturer has a reasonable assurance that sale was or will be made to ultimate buyers in the United States.

Useful life means the period during which the engine is designed to properly function in terms of reliability and fuel consumption, without being remanufactured, specified as a number of hours of operation or calendar years. It is the period during which a new nonroad engine is required to comply with all applicable emission standards. See § 1048.101(g).

Variable-speed engine means an engine that is not a constant-speed engine.

Void means to invalidate a certificate or an exemption. If we void a certificate, all the vehicles produced under that engine family for that model year are considered noncompliant, and you are liable for each vehicle produced under the certificate and may face civil or criminal penalties or both. If we void an exemption, all the vehicles produced under that exemption are considered uncertified (or nonconforming), and you are liable for each vehicle produced under the exemption and may face civil or criminal penalties or both. You may not produce any additional vehicles using the voided exemption.

Volatile liquid fuel means any fuel other than diesel or biodiesel that is a liquid at atmospheric pressure.

Wide-open throttle means maximum throttle opening. Unless this is specified at a given speed, it refers to maximum throttle opening at maximum speed. For electronically controlled or other engines with multiple possible fueling rates, wide-open throttle also means the maximum fueling rate at maximum throttle opening under test conditions.

§ 1048.805 What symbols, acronyms, and abbreviations does this part use?

The following symbols, acronyms, and abbreviations apply to this part:

°C degrees Celsius.
ASTM American Society for Testing and Materials.
cc cubic centimeters.
CFR Code of Federal Regulations.
cm centimeter.
CO carbon monoxide.
CO_2 carbon dioxide.
EPA Environmental Protection Agency.
g/kW-hr grams per kilowatt-hour.
HC hydrocarbon.
ISO International Organization for Standardization.
kPa kilopascals.
kW kilowatts.
LPG liquefied petroleum gas.
m meters.
MIL malfunction-indicator light.
mm Hg millimeters of mercury.
NMHC nonmethane hydrocarbons.
NO_X oxides of nitrogen (NO and NO_2).
psi pounds per square inch of absolute pressure.
psig pounds per square inch of gauge pressure.
rpm revolutions per minute.
SAE Society of Automotive Engineers.
SI spark-ignition.
THC total hydrocarbon.
THCE total hydrocarbon equivalent.
U.S.C. United States Code.

§ 1048.810 What materials does this part reference?

We have incorporated by reference the documents listed in this section. The Director of the Federal Register approved the incorporation by reference as prescribed in 5 U.S.C. 552(a) and 1 CFR part 51. Anyone may inspect copies at the U.S. EPA, Air and Radiation Docket and Information Center, 1301 Constitution Ave., NW., Room B102, EPA West Building, Washington, DC 20460 or the Office of the Federal Register, 800 N. Capitol St., NW., 7th Floor, Suite 700, Washington, DC.

(a) *ASTM material.* Table 1 of § 1048.810 lists material from the American Society for Testing and Materials that we have incorporated by reference. The first column lists the number and name of the material. The second column lists the sections of this part where we reference it. Anyone may purchase copies of these materials from the American Society for Testing and Materials,

100 Barr Harbor Dr., West Conshohocken, PA 19428. Table 1 follows:

TABLE 1 OF § 1048.810—ASTM MATERIALS

Document number and name	Part 1048 reference
ASTM E29–02, Standard Practice for Using Significant Digits in Test Data to Determine Conformance with Specifications	1048.801

(b) *SAE material.* Table 2 of § 1048.810 lists material from the Society of Automotive Engineering that we have incorporated by reference. The first column lists the number and name of the material. The second column lists the sections of this part where we reference it. Anyone may purchase copies of these materials from the Society of Automotive Engineers, 400 Commonwealth Drive, Warrendale, PA 15096. Table 2 follows:

TABLE 2 OF § 1048.810—SAE MATERIALS

Document number and name	Part 1048 reference
SAE J1930, Electrical/Electronic Systems Diagnostic Terms, Definitions, Abbreviations, and Acronyms, May 1998	1048.135
SAE J2260, Nonmetallic Fuel System Tubing with One or More Layers, November 1996	1048.105

(c) *ISO material.* Table 3 of § 1048.810 lists material from the International Organization for Standardization that we have incorporated by reference. The first column lists the number and name of the material. The second column lists the section of this part where we reference it. Anyone may purchase copies of these materials from the International Organization for Standardization, Case Postale 56, CH–1211 Geneva 20, Switzerland. Table 3 follows:

TABLE 3 OF § 1048.810—ISO MATERIALS

Document number and name	Part 1048 reference
ISO 9141–2 Road vehicles—Diagnostic systems—Part 2: CARB requirements for interchange of digital information, February 1994	1048.110
ISO 14230–4 Road vehicles—Diagnostic systems—Keyword Protocol 2000—Part 4: Requirements for emission-related systems, June 2000	1048.110

§ 1048.815 How should I request EPA to keep my information confidential?

(a) Clearly show what you consider confidential by marking, circling, bracketing, stamping, or some other method. We will store your confidential information as described in 40 CFR part 2. Also, we will disclose it only as specified in 40 CFR part 2.

(b) If you send us a second copy without the confidential information, we will assume it contains nothing confidential whenever we need to release information from it.

(c) If you send us information without claiming it is confidential, we may make it available to the public without further notice to you, as described in 40 CFR 2.204.

§ 1048.820 How do I request a hearing?

See 40 CFR part 1068, subpart G, for information related to hearings.

APPENDIX I TO PART 1048—LARGE SPARK-IGNITION (SI) TRANSIENT CYCLE FOR CONSTANT-SPEED ENGINES

The following table shows the transient duty-cycle for constant-speed engines, as described in §1048.510:

Time(s)	Normalized speed (percent)	Normalized torque (percent)
1	58	5
2	58	5
3	58	5
4	58	5
5	58	5
6	58	5
7	58	5
8	58	5
9	58	5
10	58	5
11	58	5
12	65	8
13	72	9
14	79	12
15	86	14
16	93	16
17	93	16
18	93	16
19	93	16
20	93	16
21	93	16
22	93	16
23	93	16
24	93	31
25	93	30
26	93	27
27	93	23
28	93	24
29	93	21
30	93	20
31	93	18
32	93	16
33	93	18
34	93	16
35	93	17
36	93	20
37	93	20
38	93	22
39	93	20
40	93	17
41	93	17
42	93	17
43	93	16
44	93	18
45	93	18
46	93	21
47	93	21
48	93	18
49	94	24
50	93	28
51	93	23
52	93	19
53	93	20
54	93	20
55	93	29
56	93	23
57	93	25
58	93	23
59	93	23
60	93	23
61	93	22
62	93	21
63	93	22
64	93	30
65	93	33
66	93	25
67	93	29
68	93	27
69	93	23
70	93	21
71	93	21
72	93	19
73	93	20
74	93	24
75	93	23
76	93	21
77	93	44
78	93	34
79	93	28
80	93	37
81	93	29
82	93	27
83	93	33
84	93	28
85	93	22
86	96	30
87	95	25
88	95	17
89	95	13
90	95	10
91	95	9
92	95	8
93	95	7
94	95	7
95	95	6
96	95	6
97	93	37
98	93	35
99	93	29
100	93	23
101	93	23
102	93	21
103	93	20
104	93	29
105	93	27
106	93	26
107	93	35
108	93	43
109	95	35
110	95	24
111	95	17
112	95	13
113	95	10
114	95	9
115	95	8
116	95	7
117	95	7
118	95	6
119	93	36
120	93	30
121	93	25
122	93	21
123	93	22
124	93	19
125	93	34
126	93	36
127	93	31
128	93	26
129	93	27
130	93	22
131	93	22
132	93	18
133	93	18
134	93	19

Time(s)	Normalized speed (percent)	Normalized torque (percent)
135	93	19
136	93	23
137	93	22
138	93	20
139	93	23
140	93	20
141	93	18
142	93	18
143	93	16
144	93	19
145	94	25
146	93	30
147	93	29
148	93	23
149	93	24
150	93	22
151	94	20
152	93	17
153	93	16
154	93	16
155	93	15
156	93	17
157	93	18
158	93	20
159	93	21
160	93	18
161	93	17
162	92	54
163	93	38
164	93	29
165	93	24
166	93	24
167	93	24
168	93	23
169	93	20
170	93	20
171	93	18
172	93	19
173	93	19
174	93	16
175	93	16
176	93	16
177	93	18
178	93	21
179	93	20
180	93	20
181	93	17
182	93	19
183	93	17
184	93	18
185	93	16
186	93	16
187	93	16
188	93	17
189	93	16
190	93	17
191	93	18
192	93	17
193	93	16
194	93	17
195	93	17
196	93	22
197	93	19
198	93	19
199	95	21
200	95	16
201	95	12
202	95	10
203	96	8
204	96	7
205	95	7
206	96	7
207	95	6
208	96	6
209	96	6
210	88	6
211	89	48
212	93	34
213	93	27
214	93	26
215	93	25
216	93	22
217	93	23
218	93	21
219	93	21
220	93	23
221	93	23
222	93	23
223	93	23
224	93	23
225	93	22
226	93	22
227	93	24
228	93	23
229	93	23
230	93	21
231	93	20
232	93	20
233	93	20
234	93	22
235	93	26
236	93	22
237	93	20
238	93	18
239	93	22
240	93	20
241	94	27
242	93	22
243	93	23
244	93	21
245	93	22
246	95	22
247	95	16
248	95	12
249	95	10
250	95	9
251	95	8
252	96	7
253	95	7
254	95	6
255	92	42
256	93	36
257	93	33
258	92	60
259	93	48
260	93	36
261	93	30
262	93	28
263	93	24
264	93	24
265	93	23
266	93	23
267	93	25
268	93	27
269	93	29
270	93	26
271	93	26
272	93	21
273	93	23
274	93	23
275	94	23
276	93	40
277	94	67
278	93	46

Time(s)	Normalized speed (percent)	Normalized torque (percent)
279	93	38
280	93	29
281	93	28
282	93	27
283	93	29
284	93	28
285	94	34
286	93	31
287	93	30
288	94	42
289	93	31
290	93	29
291	93	27
292	93	23
293	93	23
294	93	20
295	93	20
296	93	23
297	93	23
298	93	24
299	93	25
300	93	20
301	93	25
302	93	23
303	93	23
304	93	24
305	93	28
306	93	23
307	93	24
308	93	34
309	93	31
310	93	35
311	93	31
312	93	32
313	93	31
314	93	30
315	93	23
316	93	23
317	93	36
318	93	32
319	93	25
320	93	31
321	93	33
322	93	31
323	93	27
324	93	24
325	93	19
326	96	21
327	96	16
328	95	12
329	95	10
330	95	8
331	95	8
332	95	7
333	95	7
334	95	6
335	95	6
336	95	6
337	87	6
338	57	6
339	58	6
340	58	6
341	58	6
342	58	6
343	58	6
344	58	6
345	58	6
346	58	6
347	58	6
348	58	6
349	58	6
350	58	6
351	58	6
352	95	73
353	93	65
354	93	52
355	93	38
356	93	30
357	93	31
358	93	26
359	93	21
360	93	22
361	93	26
362	93	23
363	93	19
364	93	27
365	93	42
366	93	29
367	94	25
368	94	26
369	94	29
370	93	28
371	93	23
372	93	21
373	93	26
374	93	23
375	93	20
376	94	23
377	93	18
378	93	19
379	93	23
380	93	19
381	93	16
382	93	25
383	93	22
384	93	20
385	93	25
386	94	28
387	93	23
388	93	23
389	93	25
390	93	23
391	93	20
392	93	19
393	93	24
394	93	20
395	93	18
396	93	21
397	95	22
398	96	16
399	96	12
400	95	10
401	96	9
402	95	8
403	96	7
404	96	7
405	96	6
406	96	6
407	95	6
408	91	6
409	58	6
410	58	6
411	58	6
412	58	6
413	58	6
414	58	6
415	58	6
416	58	6
417	58	6
418	58	6
419	58	6
420	58	6
421	58	6
422	58	6

Time(s)	Normalized speed (percent)	Normalized torque (percent)
423	58	6
424	58	6
425	58	6
426	58	6
427	58	6
428	58	6
429	58	6
430	58	6
431	58	6
432	58	6
433	58	6
434	58	6
435	58	6
436	58	6
437	58	6
438	58	6
439	58	6
440	58	6
441	58	6
442	58	6
443	93	66
444	93	48
445	93	40
446	93	34
447	93	28
448	93	23
449	93	28
450	93	27
451	93	23
452	93	19
453	93	25
454	93	24
455	93	22
456	93	31
457	93	36
458	93	28
459	93	25
460	93	35
461	93	34
462	93	29
463	93	37
464	93	36
465	93	38
466	93	31
467	93	29
468	93	34
469	93	36
470	93	34
471	93	31
472	93	26
473	93	21
474	94	16
475	96	19
476	96	15
477	95	11
478	96	10
479	95	8
480	95	7
481	95	7
482	96	7
483	96	6
484	96	6
485	95	6
486	85	6
487	56	74
488	93	52
489	93	42
490	93	36
491	93	35
492	93	33
493	93	38
494	93	40
495	93	29
496	93	23
497	93	23
498	93	24
499	93	24
500	93	20
501	93	19
502	93	16
503	93	21
504	93	23
505	93	24
506	93	22
507	93	18
508	93	21
509	95	18
510	95	20
511	95	15
512	96	11
513	95	10
514	96	8
515	95	7
516	95	7
517	95	7
518	95	6
519	96	6
520	96	6
521	83	6
522	56	6
523	58	6
524	72	54
525	94	51
526	93	42
527	93	42
528	93	31
529	93	25
530	93	21
531	93	17
532	93	15
533	93	15
534	93	16
535	93	15
536	93	14
537	93	15
538	93	16
539	94	15
540	93	45
541	93	45
542	93	41
543	93	33
544	93	26
545	93	21
546	93	20
547	93	17
548	93	16
549	93	17
550	93	16
551	93	14
552	93	16
553	93	15
554	93	14
555	93	16
556	93	15
557	93	14
558	93	13
559	93	14
560	93	14
561	93	15
562	93	17
563	93	17
564	93	22
565	93	22
566	93	19

Time(s)	Normalized speed (percent)	Normalized torque (percent)
567	93	19
568	93	20
569	93	18
570	93	20
571	93	20
572	93	42
573	93	32
574	93	25
575	93	26
576	93	23
577	93	21
578	93	23
579	93	19
580	93	21
581	93	20
582	93	20
583	93	20
584	93	18
585	93	18
586	93	21
587	93	19
588	93	21
589	93	19
590	93	19
591	93	18
592	93	18
593	93	17
594	93	16
595	93	16
596	93	15
597	93	16
598	93	19
599	93	52
600	93	45
601	95	39
602	95	39
603	95	39
604	95	39
605	94	30
606	95	30
607	95	29
608	95	24
609	94	30
610	95	28
611	94	25
612	94	29
613	95	32
614	95	33
615	95	44
616	99	37
617	98	27
618	98	19
619	98	13
620	98	11
621	98	9
622	98	7
623	98	7
624	98	6
625	98	6
626	98	6
627	98	5
628	69	6
629	49	5
630	51	5
631	51	5
632	51	5
633	51	6
634	51	6
635	51	6
636	51	6
637	51	5
638	51	5
639	51	5
640	51	5
641	51	6
642	51	6
643	51	6
644	51	6
645	51	5
646	51	6
647	51	5
648	51	6
649	51	5
650	96	35
651	95	29
652	95	26
653	95	31
654	95	34
655	95	29
656	95	29
657	95	30
658	95	24
659	95	19
660	95	23
661	95	21
662	95	22
663	95	19
664	95	18
665	95	20
666	94	60
667	95	48
668	95	39
669	95	36
670	95	27
671	95	22
672	95	19
673	95	22
674	95	19
675	94	17
676	95	27
677	95	24
678	98	19
679	98	19
680	98	14
681	98	11
682	98	9
683	98	8
684	98	7
685	98	6
686	98	6
687	98	6
688	98	6
689	98	5
690	81	5
691	49	5
692	78	48
693	95	37
694	95	31
695	94	32
696	94	34
697	95	29
698	95	25
699	94	26
700	95	28
701	95	27
702	94	28
703	95	30
704	95	27
705	95	26
706	95	27
707	95	25
708	95	26
709	95	25
710	95	23

Time(s)	Normalized speed (percent)	Normalized torque (percent)
711	95	20
712	95	23
713	95	20
714	95	18
715	94	22
716	95	19
717	95	23
718	95	27
719	95	26
720	95	23
721	95	20
722	99	23
723	98	20
724	98	14
725	98	11
726	98	9
727	98	8
728	98	7
729	98	6
730	98	6
731	98	6
732	98	5
733	98	5
734	73	6
735	49	5
736	50	77
737	95	39
738	95	30
739	95	28
740	94	31
741	95	36
742	95	36
743	95	30
744	95	26
745	95	27
746	95	22
747	95	18
748	95	19
749	95	25
750	94	25
751	95	21
752	95	22
753	95	27
754	95	27
755	95	27
756	95	24
757	94	20
758	94	23
759	94	26
760	95	25
761	95	25
762	95	21
763	95	28
764	94	39
765	95	32
766	95	24
767	95	19
768	98	20
769	98	17
770	98	12
771	98	10
772	98	8
773	98	7
774	98	6
775	98	6
776	95	61
777	94	51
778	95	40
779	94	35
780	94	36
781	94	32
782	95	24
783	94	19
784	94	19
785	95	19
786	95	19
787	94	18
788	94	20
789	94	23
790	94	22
791	95	23
792	94	20
793	94	18
794	95	16
795	95	17
796	94	16
797	94	16
798	94	17
799	94	18
800	94	21
801	95	21
802	94	19
803	95	18
804	94	19
805	95	22
806	95	21
807	95	19
808	94	20
809	94	22
810	94	22
811	94	22
812	95	23
813	94	22
814	95	22
815	95	19
816	95	16
817	95	14
818	95	18
819	95	18
820	94	20
821	94	22
822	94	19
823	95	18
824	95	17
825	95	19
826	95	19
827	95	19
828	94	19
829	94	21
830	94	19
831	94	17
832	94	18
833	94	21
834	94	19
835	95	18
836	95	19
837	95	17
838	94	15
839	94	17
840	95	19
841	94	22
842	94	21
843	94	18
844	94	16
845	95	14
846	95	14
847	94	19
848	95	20
849	95	23
850	98	23
851	98	22
852	98	16
853	98	12
854	98	9

Time(s)	Normalized speed (percent)	Normalized torque (percent)
855	98	8
856	98	7
857	98	6
858	98	6
859	98	6
860	98	5
861	98	5
862	80	5
863	49	5
864	51	5
865	51	5
866	51	6
867	51	6
868	51	6
869	51	6
870	51	5
871	51	6
872	51	7
873	96	45
874	94	44
875	94	34
876	94	41
877	95	44
878	94	32
879	95	26
880	94	20
881	95	29
882	95	27
883	95	21
884	95	34
885	95	31
886	94	26
887	95	22
888	95	23
889	95	19
890	94	18
891	94	20
892	94	26
893	95	29
894	94	32
895	95	26
896	95	34
897	95	30
898	95	24
899	95	19
900	94	17
901	94	16
902	98	19
903	98	17
904	98	12
905	98	10
906	98	8
907	98	7
908	98	6
909	98	6
910	98	6
911	98	5
912	98	5
913	98	5
914	69	5
915	49	5
916	51	5
917	51	6
918	51	6
919	69	75
920	95	70
921	95	57
922	94	49
923	94	38
924	95	43
925	94	51
926	94	41
927	98	42
928	95	89
929	95	66
930	94	52
931	95	41
932	95	34
933	95	34
934	94	30
935	94	30
936	95	29
937	94	28
938	95	24
939	94	34
940	95	26
941	94	36
942	95	27
943	95	25
944	95	26
945	94	21
946	94	19
947	98	21
948	93	53
949	94	45
950	94	35
951	95	28
952	95	23
953	95	20
954	95	17
955	94	19
956	94	18
957	94	18
958	94	18
959	94	19
960	97	17
961	98	19
962	98	14
963	98	11
964	98	9
965	98	7
966	98	7
967	98	6
968	98	6
969	98	6
970	98	5
971	98	5
972	82	5
973	49	5
974	51	6
975	51	6
976	51	6
977	51	5
978	51	6
979	72	58
980	94	36
981	95	28
982	95	24
983	95	25
984	95	26
985	94	30
986	94	26
987	95	34
988	95	57
989	95	45
990	94	37
991	95	34
992	95	27
993	95	27
994	95	29
995	98	22
996	94	84
997	94	74
998	95	62

Time(s)	Normalized speed (percent)	Normalized torque (percent)
999	94	51
1000	95	50
1001	95	81
1002	94	65
1003	95	49
1004	94	56
1005	95	65
1006	94	59
1007	99	58
1008	98	41
1009	98	27
1010	98	19
1011	98	13
1012	98	11
1013	98	9
1014	98	8
1015	98	7
1016	98	6
1017	98	6
1018	98	6
1019	71	6
1020	49	5
1021	51	6
1022	51	6
1023	51	6
1024	51	6
1025	51	6
1026	51	6
1027	51	6
1028	51	6
1029	51	6
1030	51	6
1031	51	5
1032	51	6
1033	51	5
1034	51	6
1035	51	6
1036	51	6
1037	51	5
1038	51	5
1039	51	6
1040	51	6
1041	69	59
1042	94	48
1043	95	34
1044	95	29
1045	95	26
1046	94	27
1047	95	31
1048	95	26
1049	95	34
1050	95	29
1051	95	31
1052	95	29
1053	95	35
1054	95	38
1055	94	41
1056	95	28
1057	95	36
1058	94	30
1059	94	26
1060	94	33
1061	95	34
1062	95	27
1063	98	26
1064	98	19
1065	98	13
1066	98	11
1067	98	9
1068	98	7
1069	98	7
1070	98	6
1071	98	6
1072	98	6
1073	98	5
1074	89	6
1075	49	5
1076	51	6
1077	51	6
1078	51	6
1079	51	6
1080	51	6
1081	51	6
1082	51	6
1083	50	6
1084	51	6
1085	51	6
1086	51	6
1087	51	6
1088	51	6
1089	51	6
1090	51	6
1091	56	74
1092	95	56
1093	94	49
1094	95	47
1095	94	43
1096	94	33
1097	95	50
1098	94	40
1099	95	33
1100	95	24
1101	94	22
1102	94	22
1103	94	25
1104	95	27
1105	95	32
1106	94	29
1107	94	26
1108	94	26
1109	94	24
1110	98	52
1111	94	41
1112	99	35
1113	95	58
1114	95	58
1115	98	57
1116	98	38
1117	98	26
1118	93	63
1119	94	59
1120	98	100
1121	94	73
1122	98	53
1123	94	76
1124	95	61
1125	94	49
1126	94	37
1127	97	50
1128	98	36
1129	98	25
1130	98	18
1131	98	12
1132	98	10
1133	98	8
1134	98	7
1135	98	7
1136	98	6
1137	98	6
1138	98	6
1139	80	6
1140	49	6
1141	78	61
1142	95	50

Time(s)	Normalized speed (percent)	Normalized torque (percent)
1143	94	43
1144	94	42
1145	94	31
1146	95	30
1147	95	34
1148	95	28
1149	95	27
1150	94	27
1151	95	31
1152	95	42
1153	94	41
1154	95	37
1155	95	43
1156	95	34
1157	95	31
1158	95	27
1159	95	23
1160	95	27
1161	96	38
1162	95	40
1163	95	39
1164	95	26
1165	95	33
1166	94	28
1167	94	34
1168	98	73
1169	95	49
1170	95	51
1171	94	55
1172	95	48
1173	95	35
1174	95	39
1175	95	39
1176	94	41
1177	95	30
1178	95	23
1179	94	19
1180	95	25
1181	94	29
1182	98	27
1183	95	89
1184	95	74
1185	94	60
1186	94	48
1187	94	41
1188	94	29
1189	94	24
1190	95	19
1191	94	21
1192	95	29
1193	95	28
1194	95	27
1195	94	23
1196	95	25
1197	95	26
1198	94	22
1199	95	19
1200	94	17

APPENDIX II TO PART 1048—LARGE SPARK-IGNITION (SI) COMPOSITE TRANSIENT CYCLE

The following table shows the transient duty-cycle for engines that are not constant-speed engines, as described in § 1048.510:

Time(s)	Normalized speed (percent)	Normalized torque (percent)
0	0	0
1	0	0
2	0	0
3	0	0
4	0	0
5	0	0
6	0	0
7	0	0
8	0	0
9	1	8
10	6	54
11	8	61
12	34	59
13	22	46
14	5	51
15	18	51
16	31	50
17	30	56
18	31	49
19	25	66
20	58	55
21	43	31
22	16	45
23	24	38
24	24	27
25	30	33
26	45	65
27	50	49
28	23	42
29	13	42
30	9	45
31	23	30
32	37	45
33	44	50
34	49	52
35	55	49
36	61	46
37	66	38
38	42	33
39	17	41
40	17	37
41	7	50
42	20	32
43	5	55
44	30	42
45	44	53
46	45	56
47	41	52
48	24	41
49	15	40
50	11	44
51	32	31
52	38	54
53	38	47
54	9	55
55	10	50
56	33	55
57	48	56
58	49	47
59	33	44
60	52	43
61	55	43
62	59	38
63	44	28
64	24	37
65	12	44
66	9	47
67	12	52
68	34	21
69	29	44
70	44	54
71	54	62
72	62	57

Time(s)	Normalized speed (percent)	Normalized torque (percent)
73	72	56
74	88	71
75	100	69
76	100	34
77	100	42
78	100	54
79	100	58
80	100	38
81	83	17
82	61	15
83	43	22
84	24	35
85	16	39
86	15	45
87	32	34
88	14	42
89	8	48
90	5	51
91	10	41
92	12	37
93	4	47
94	3	49
95	3	50
96	4	49
97	4	48
98	8	43
99	2	51
100	5	46
101	8	41
102	4	47
103	3	49
104	6	45
105	3	48
106	10	42
107	18	27
108	3	50
109	11	41
110	34	29
111	51	57
112	67	63
113	61	32
114	44	31
115	48	54
116	69	65
117	85	65
118	81	29
119	74	21
120	62	23
121	76	58
122	96	75
123	100	77
124	100	27
125	100	79
126	100	79
127	100	81
128	100	57
129	99	52
130	81	35
131	69	29
132	47	22
133	34	28
134	27	37
135	83	60
136	100	74
137	100	7
138	100	2
139	70	18
140	23	39
141	5	54
142	11	40
143	11	34
144	11	41
145	19	25
146	16	32
147	20	31
148	21	38
149	21	42
150	9	51
151	4	49
152	2	51
153	1	58
154	21	57
155	29	47
156	33	45
157	16	49
158	38	45
159	37	43
160	35	42
161	39	43
162	51	49
163	59	55
164	65	54
165	76	62
166	84	59
167	83	29
168	67	35
169	84	54
170	90	58
171	93	43
172	90	29
173	66	19
174	52	16
175	49	17
176	56	38
177	73	71
178	86	80
179	96	75
180	89	27
181	66	17
182	50	18
183	36	25
184	36	24
185	38	40
186	40	50
187	27	48
188	19	48
189	23	50
190	19	45
191	6	51
192	24	48
193	49	67
194	47	49
195	22	44
196	25	40
197	38	54
198	43	55
199	40	52
200	14	49
201	11	45
202	7	48
203	26	41
204	41	59
205	53	60
206	44	54
207	22	40
208	24	41
209	32	53
210	44	74
211	57	25
212	22	49
213	29	45
214	19	37
215	14	43
216	36	40

Time(s)	Normalized speed (percent)	Normalized torque (percent)
217	43	63
218	42	49
219	15	50
220	19	44
221	47	59
222	67	80
223	76	74
224	87	66
225	98	61
226	100	38
227	97	27
228	100	53
229	100	72
230	100	49
231	100	4
232	100	13
233	87	15
234	53	26
235	33	27
236	39	19
237	51	33
238	67	54
239	83	60
240	95	52
241	100	50
242	100	36
243	100	25
244	85	16
245	62	16
246	40	26
247	56	39
248	81	75
249	98	86
250	100	76
251	100	51
252	100	78
253	100	83
254	100	100
255	100	66
256	100	85
257	100	72
258	100	45
259	98	58
260	60	30
261	43	32
262	71	36
263	44	32
264	24	38
265	42	17
266	22	51
267	13	53
268	23	45
269	29	50
270	28	42
271	21	55
272	34	57
273	44	47
274	19	46
275	13	44
276	25	36
277	43	51
278	55	73
279	68	72
280	76	63
281	80	45
282	83	40
283	78	26
284	60	20
285	47	19
286	52	25
287	36	30
288	40	26
289	45	34
290	47	35
291	42	28
292	46	38
293	48	44
294	68	61
295	70	47
296	48	28
297	42	22
298	31	29
299	22	35
300	28	28
301	46	46
302	62	69
303	76	81
304	88	85
305	98	81
306	100	74
307	100	13
308	100	11
309	100	17
310	99	3
311	80	7
312	62	11
313	63	11
314	64	16
315	69	43
316	81	67
317	93	74
318	100	72
319	94	27
320	73	15
321	40	33
322	40	52
323	50	50
324	11	53
325	12	45
326	5	50
327	1	55
328	7	55
329	62	60
330	80	28
331	23	37
332	39	58
333	47	24
334	59	51
335	58	68
336	36	52
337	18	42
338	36	52
339	59	73
340	72	85
341	85	92
342	99	90
343	100	72
344	100	18
345	100	76
346	100	64
347	100	87
348	100	97
349	100	84
350	100	100
351	100	91
352	100	83
353	100	93
354	100	100
355	94	43
356	72	10
357	77	3
358	48	2
359	29	5
360	59	19

Time(s)	Normalized speed (percent)	Normalized torque (percent)
361	63	5
362	35	2
363	24	3
364	28	2
365	36	16
366	54	23
367	60	10
368	33	1
369	23	0
370	16	0
371	11	0
372	20	0
373	25	2
374	40	3
375	33	4
376	34	5
377	46	7
378	57	10
379	66	11
380	75	14
381	79	11
382	80	16
383	92	21
384	99	16
385	83	2
386	71	2
387	69	4
388	67	4
389	74	16
390	86	25
391	97	28
392	100	15
393	83	2
394	62	4
395	40	6
396	49	10
397	36	5
398	27	4
399	29	3
400	22	2
401	13	3
402	37	36
403	90	26
404	41	2
405	25	2
406	29	2
407	38	7
408	50	13
409	55	10
410	29	3
411	24	7
412	51	16
413	62	15
414	72	35
415	91	74
416	100	73
417	100	8
418	98	11
419	100	59
420	100	98
421	100	99
422	100	75
423	100	95
424	100	100
425	100	97
426	100	90
427	100	86
428	100	82
429	97	43
430	70	16
431	50	20
432	42	33
433	89	64
434	89	77
435	99	95
436	100	41
437	77	12
438	29	37
439	16	41
440	16	38
441	15	36
442	18	44
443	4	55
444	24	26
445	26	35
446	15	45
447	21	39
448	29	52
449	26	46
450	27	50
451	13	43
452	25	36
453	37	57
454	29	46
455	17	39
456	13	41
457	19	38
458	28	35
459	8	51
460	14	36
461	17	47
462	34	39
463	34	57
464	11	70
465	13	51
466	13	68
467	38	44
468	53	67
469	29	69
470	19	65
471	52	45
472	61	79
473	29	70
474	15	53
475	15	60
476	52	40
477	50	61
478	13	74
479	46	51
480	60	73
481	33	84
482	31	63
483	41	42
484	26	69
485	23	65
486	48	49
487	28	57
488	16	67
489	39	48
490	47	73
491	35	87
492	26	73
493	30	61
494	34	49
495	35	66
496	56	47
497	49	64
498	59	64
499	42	69
500	6	77
501	5	59
502	17	59
503	45	53
504	21	62

Time(s)	Normalized speed (percent)	Normalized torque (percent)
505	31	60
506	53	68
507	48	79
508	45	61
509	51	47
510	41	48
511	26	58
512	21	62
513	50	52
514	39	65
515	23	65
516	42	62
517	57	80
518	66	81
519	64	62
520	45	42
521	33	42
522	27	57
523	31	59
524	41	53
525	45	72
526	48	73
527	46	90
528	56	76
529	64	76
530	69	64
531	72	59
532	73	58
533	71	56
534	66	48
535	61	50
536	55	56
537	52	52
538	54	49
539	61	50
540	64	54
541	67	54
542	68	52
543	60	53
544	52	50
545	45	49
546	38	45
547	32	45
548	26	53
549	23	56
550	30	49
551	33	55
552	35	59
553	33	65
554	30	67
555	28	59
556	25	58
557	23	56
558	22	57
559	19	63
560	14	63
561	31	61
562	35	62
563	21	80
564	28	65
565	7	74
566	23	54
567	38	54
568	14	78
569	38	58
570	52	75
571	59	81
572	66	69
573	54	44
574	48	34
575	44	33
576	40	40
577	28	58
578	27	63
579	35	45
580	20	66
581	15	60
582	10	52
583	22	56
584	30	62
585	21	67
586	29	53
587	41	56
588	15	67
589	24	56
590	42	69
591	39	83
592	40	73
593	35	67
594	32	61
595	30	65
596	30	72
597	48	51
598	66	58
599	62	71
600	36	63
601	17	59
602	16	50
603	16	62
604	34	48
605	51	66
606	35	74
607	15	56
608	19	54
609	43	65
610	52	80
611	52	83
612	49	57
613	48	46
614	37	36
615	25	44
616	14	53
617	13	64
618	23	56
619	21	63
620	18	67
621	20	54
622	16	67
623	26	56
624	41	65
625	28	62
626	19	60
627	33	56
628	37	70
629	24	79
630	28	57
631	40	57
632	40	58
633	28	44
634	25	41
635	29	53
636	31	55
637	26	64
638	20	50
639	16	53
640	11	54
641	13	53
642	23	50
643	32	59
644	36	63
645	33	59
646	24	52
647	20	52
648	22	55

Time(s)	Normalized speed (percent)	Normalized torque (percent)
649	30	53
650	37	59
651	41	58
652	36	54
653	29	49
654	24	53
655	14	57
656	10	54
657	9	55
658	10	57
659	13	55
660	15	64
661	31	57
662	19	69
663	14	59
664	33	57
665	41	65
666	39	64
667	39	59
668	39	51
669	28	41
670	19	49
671	27	54
672	37	63
673	32	74
674	16	70
675	12	67
676	13	60
677	17	56
678	15	62
679	25	47
680	27	64
681	14	71
682	5	65
683	6	57
684	6	57
685	15	52
686	22	61
687	14	77
688	12	67
689	12	62
690	14	59
691	15	58
692	18	55
693	22	53
694	19	69
695	14	67
696	9	63
697	8	56
698	17	49
699	25	55
700	14	70
701	12	60
702	22	57
703	27	67
704	29	68
705	34	62
706	35	61
707	28	78
708	11	71
709	4	58
710	5	58
711	10	56
712	20	63
713	13	76
714	11	65
715	9	60
716	7	55
717	8	53
718	10	60
719	28	53
720	12	73
721	4	64
722	4	61
723	4	61
724	10	56
725	8	61
726	20	56
727	32	62
728	33	66
729	34	73
730	31	61
731	33	55
732	33	60
733	31	59
734	29	58
735	31	53
736	33	51
737	33	48
738	27	44
739	21	52
740	13	57
741	12	56
742	10	64
743	22	47
744	15	74
745	8	66
746	34	47
747	18	71
748	9	57
749	11	55
750	12	57
751	10	61
752	16	53
753	12	75
754	6	70
755	12	55
756	24	50
757	28	60
758	28	64
759	23	60
760	20	56
761	26	50
762	28	55
763	18	56
764	15	52
765	11	59
766	16	59
767	34	54
768	16	82
769	15	64
770	36	53
771	45	64
772	41	59
773	34	50
774	27	45
775	22	52
776	18	55
777	26	54
778	39	62
779	37	71
780	32	58
781	24	48
782	14	59
783	7	59
784	7	55
785	18	49
786	40	62
787	44	73
788	41	68
789	35	48
790	29	54
791	22	69
792	46	53

Time(s)	Normalized speed (percent)	Normalized torque (percent)
793	59	71
794	69	68
795	75	47
796	62	32
797	48	35
798	27	59
799	13	58
800	14	54
801	21	53
802	23	56
803	23	57
804	23	65
805	13	65
806	9	64
807	27	56
808	26	78
809	40	61
810	35	76
811	28	66
812	23	57
813	16	50
814	11	53
815	9	57
816	9	62
817	27	57
818	42	69
819	47	75
820	53	67
821	61	62
822	63	53
823	60	54
824	56	44
825	49	39
826	39	35
827	30	34
828	33	46
829	44	56
830	50	56
831	44	52
832	38	46
833	33	44
834	29	45
835	24	46
836	18	52
837	9	55
838	10	54
839	20	53
840	27	58
841	29	59
842	30	62
843	30	65
844	27	66
845	32	58
846	40	56
847	41	57
848	18	73
849	15	55
850	18	50
851	17	52
852	20	49
853	16	62
854	4	67
855	2	64
856	7	54
857	10	50
858	9	57
859	5	62
860	12	51
861	14	65
862	9	64
863	31	50
864	30	78
865	21	65
866	14	51
867	10	55
868	6	59
869	7	59
870	19	54
871	23	61
872	24	62
873	34	61
874	51	67
875	60	66
876	58	55
877	60	52
878	64	55
879	68	51
880	63	54
881	64	50
882	68	58
883	73	47
884	63	40
885	50	38
886	29	61
887	14	61
888	14	53
889	42	6
890	58	6
891	58	6
892	77	39
893	93	56
894	93	44
895	93	37
896	93	31
897	93	25
898	93	26
899	93	27
900	93	25
901	93	21
902	93	22
903	93	24
904	93	23
905	93	27
906	93	34
907	93	32
908	93	26
909	93	31
910	93	34
911	93	31
912	93	33
913	93	36
914	93	37
915	93	34
916	93	30
917	93	32
918	93	35
919	93	35
920	93	32
921	93	28
922	93	23
923	94	18
924	95	18
925	96	17
926	95	13
927	96	10
928	95	9
929	95	7
930	95	7
931	96	7
932	96	6
933	96	6
934	95	6
935	90	6
936	69	43

Time(s)	Normalized speed (percent)	Normalized torque (percent)
937	76	62
938	93	47
939	93	39
940	93	35
941	93	34
942	93	36
943	93	39
944	93	34
945	93	26
946	93	23
947	93	24
948	93	24
949	93	22
950	93	19
951	93	17
952	93	19
953	93	22
954	93	24
955	93	23
956	93	20
957	93	20
958	94	19
959	95	19
960	95	17
961	96	13
962	95	10
963	96	9
964	95	7
965	95	7
966	95	7
967	95	6
968	96	6
969	96	6
970	89	6
971	68	6
972	57	6
973	66	32
974	84	52
975	93	46
976	93	42
977	93	36
978	93	28
979	93	23
980	93	19
981	93	16
982	93	15
983	93	16
984	93	15
985	93	14
986	93	15
987	93	16
988	94	15
989	93	32
990	93	45
991	93	43
992	93	37
993	93	29
994	93	23
995	93	20
996	93	18
997	93	16
998	93	17
999	93	16
1000	93	15
1001	93	15
1002	93	15
1003	93	14
1004	93	15
1005	93	15
1006	93	14
1007	93	13
1008	93	14
1009	93	14
1010	93	15
1011	93	16
1012	93	17
1013	93	20
1014	93	22
1015	93	20
1016	93	19
1017	93	20
1018	93	19
1019	93	19
1020	93	20
1021	93	32
1022	93	37
1023	93	28
1024	93	26
1025	93	24
1026	93	22
1027	93	22
1028	93	21
1029	93	20
1030	93	20
1031	93	20
1032	93	20
1033	93	19
1034	93	18
1035	93	20
1036	93	20
1037	93	20
1038	93	20
1039	93	19
1040	93	18
1041	93	18
1042	93	17
1043	93	16
1044	93	16
1045	93	15
1046	93	16
1047	93	18
1048	93	37
1049	93	48
1050	93	38
1051	93	31
1052	93	26
1053	93	21
1054	93	18
1055	93	16
1056	93	17
1057	93	18
1058	93	19
1059	93	21
1060	93	20
1061	93	18
1062	93	17
1063	93	17
1064	93	18
1065	93	18
1066	93	18
1067	93	19
1068	93	18
1069	93	18
1070	93	20
1071	93	23
1072	93	25
1073	93	25
1074	93	24
1075	93	24
1076	93	22
1077	93	22
1078	93	22
1079	93	19
1080	93	16

Time(s)	Normalized speed (percent)	Normalized torque (percent)
1081	95	17
1082	95	37
1083	93	43
1084	93	32
1085	93	27
1086	93	26
1087	93	24
1088	93	22
1089	93	22
1090	93	22
1091	93	23
1092	93	22
1093	93	22
1094	93	23
1095	93	23
1096	93	23
1097	93	22
1098	93	23
1099	93	23
1100	93	23
1101	93	25
1102	93	27
1103	93	26
1104	93	25
1105	93	27
1106	93	27
1107	93	27
1108	93	24
1109	93	20
1110	93	18
1111	93	17
1112	93	17
1113	93	18
1114	93	18
1115	93	18
1116	93	19
1117	93	22
1118	93	22
1119	93	19
1120	93	17
1121	93	17
1122	93	18
1123	93	18
1124	93	19
1125	93	19
1126	93	20
1127	93	19
1128	93	20
1129	93	25
1130	93	30
1131	93	31
1132	93	26
1133	93	21
1134	93	18
1135	93	20
1136	93	25
1137	93	24
1138	93	21
1139	93	21
1140	93	22
1141	93	22
1142	93	28
1143	93	29
1144	93	23
1145	93	21
1146	93	18
1147	93	16
1148	93	16
1149	93	16
1150	93	17
1151	93	17
1152	93	17
1153	93	17
1154	93	23
1155	93	26
1156	93	22
1157	93	18
1158	93	16
1159	93	16
1160	93	17
1161	93	19
1162	93	18
1163	93	16
1164	93	19
1165	93	22
1166	93	25
1167	93	29
1168	93	27
1169	93	22
1170	93	18
1171	93	16
1172	93	19
1173	93	19
1174	93	17
1175	93	17
1176	93	17
1177	93	16
1178	93	16
1179	93	15
1180	93	16
1181	93	15
1182	93	17
1183	93	21
1184	93	30
1185	93	53
1186	93	54
1187	93	38
1188	93	30
1189	93	24
1190	93	20
1191	95	20
1192	96	18
1193	96	15
1194	96	11
1195	95	9
1196	95	8
1197	96	7
1198	94	33
1199	93	46
1200	93	37
1201	16	8
1202	0	0
1203	0	0
1204	0	0
1205	0	0
1206	0	0
1207	0	0
1208	0	0
1209	0	0

PART 1051—CONTROL OF EMISSIONS FROM RECREATIONAL ENGINES AND VEHICLES

Subpart A—Determining How To Follow This Part

Sec.

1051.1 Does this part apply to me?
1051.5 Which engines are excluded or exempted from this part's requirements?

1051.10 What main steps must I take to comply with this part?
1051.15 Do any other regulation parts affect me?
1051.20 May I certify a recreational engine instead of the vehicle?
1051.25 What requirements apply when installing certified engines in recreational vehicles?

Subpart B—Emission Standards and Related Requirements

1051.101 What emission standards and other requirements must my vehicles meet?
1051.103 What are the exhaust emission standards for snowmobiles?
1051.105 What are the exhaust emission standards for off-highway motorcycles?
1051.107 What are the exhaust emission standards for all-terrain vehicles (ATVs) and offroad utility vehicles?
1051.110 What evaporative emission standards must my vehicles meet?
1051.115 What other requirements must my vehicles meet?
1051.120 What warranty requirements apply to me?
1051.125 What maintenance instructions must I give to buyers?
1051.130 What installation instructions must I give to vehicle manufacturers?
1051.135 How must I label and identify the vehicles I produce?
1051.145 What provisions apply only for a limited time?

Subpart C—Certifying Engine Families

1051.201 What are the general requirements for submitting a certification application?
1051.205 What must I include in my application?
1051.210 May I get preliminary approval before I complete my application?
1051.215 What happens after I complete my application?
1051.220 How do I amend the maintenance instructions in my application?
1051.225 How do I amend my application to include new or modified vehicles or to change an FEL?
1051.230 How do I select engine families?
1051.235 What emission testing must I perform for my application for a certificate of conformity?
1051.240 How do I demonstrate that my engine family complies with exhaust emission standards?
1051.245 How do I demonstrate that my engine family complies with evaporative emission standards?
1051.250 What records must I keep and make available to EPA?
1051.255 When may EPA deny, revoke, or void my certificate of conformity?

Subpart D—Testing Production-Line Engines

1051.301 When must I test my production-line vehicles or engines?
1051.305 How must I prepare and test my production-line vehicles or engines?
1051.310 How must I select vehicles or engines for production-line testing?
1051.315 How do I know when my engine family fails the production-line testing requirements?
1051.320 What happens if one of my production-line vehicles or engines fails to meet emission standards?
1051.325 What happens if an engine family fails the production-line requirements?
1051.330 May I sell vehicles from an engine family with a suspended certificate of conformity?
1051.335 How do I ask EPA to reinstate my suspended certificate?
1051.340 When may EPA revoke my certificate under this subpart and how may I sell these vehicles again?
1051.345 What production-line testing records must I send to EPA?
1051.350 What records must I keep?

Subpart E—Testing In-Use Engines [Reserved]

Subpart F—Test Procedures

1051.501 What procedures must I use to test my vehicles or engines?
1051.505 What special provisions apply for testing snowmobiles?
1051.510 What special provisions apply for testing ATV engines? [Reserved]
1051.515 How do I test my fuel tank for permeation emissions?
1051.520 How do I perform exhaust durability testing?

Subpart G—Compliance Provisions

1051.601 What compliance provisions apply to vehicles and engines subject to this part?
1051.605 What are the provisions for exempting vehicles from the requirements of this part if they use engines you have certified under the motor-vehicle program or the Large Spark-ignition program?
1051.610 What are the provisions for producing recreational vehicles with engines already certified under the motor-vehicle program or the Large SI program?
1051.615 What are the special provisions for certifying small recreational engines?
1051.620 When may a manufacturer obtain an exemption for competition recreational vehicles?
1051.625 What special provisions apply to unique snowmobile designs for small-volume manufacturers?

1051.630 What special provisions apply to unique snowmobile designs for all manufacturers?
1051.635 What provisions apply to new manufacturers that are small businesses?

Subpart H—Averaging, Banking, and Trading for Certification

1051.701 General provisions.
1051.705 How do I average emission levels?
1051.710 How do I generate and bank emission credits?
1051.715 How do I trade emission credits?
1051.720 How do I calculate my average emission level or emission credits?
1051.725 What information must I keep?
1051.730 What information must I report?
1051.735 Are there special averaging provisions for snowmobiles?

Subpart I—Definitions and Other Reference Information

1051.801 What definitions apply to this part?
1051.805 What symbols, acronyms, and abbreviations does this part use?
1051.810 What materials does this part reference?
1051.815 How should I request EPA to keep my information confidential?
1051.820 How do I request a hearing?

AUTHORITY: 42 U.S.C. 7401–7671(q).

SOURCE: 67 FR 68347, Nov. 8, 2002, unless otherwise noted.

Subpart A—Determining How to Follow This Part

§ 1051.1 Does this part apply to me?

(a) This part applies to you if you manufacture or import any of the following recreational vehicles or engines used in them, unless we exclude them under § 1051.5:

(1) Snowmobiles.

(2) Off-highway motorcycles.

(3) All-terrain vehicles (ATVs).

(4) Offroad utility vehicles with engines with displacement less than or equal to 1000 cc, maximum brake power less than or equal to 30 kW, and maximum vehicle speed of 25 miles per hour or higher. Offroad utility vehicles that are subject to this part are subject to the same requirements as ATVs. This means that any requirement that applies to ATVs also applies to these offroad utility vehicles, without regard to whether the regulatory language mentions offroad utility vehicles.

(b) [Reserved]

(c) As noted in subpart G of this part, 40 CFR part 1068 applies to everyone, including anyone who manufactures, installs, owns, operates, or rebuilds any of the vehicles or engines this part covers.

(d) You need not follow this part for vehicles you produce before the 2006 model year, unless you certify voluntarily. See §§ 1051.103 through 1051.110, § 1051.145, and the definition of ''model year'' in § 1051.801 for more information about the timing of the requirements.

(e) The requirements of this part begin to apply when a vehicle is new. See the definition of ''new'' in § 1051.801 for more information. In some cases, vehicles or engines that have been previously used may be considered ''new'' for the purposes of this part.

(f) See §§ 1051.801 and 1051.805 for definitions and acronyms that apply to this part. The definition section contains significant regulatory provisions and it is very important that you read them.

§ 1051.5 Which engines are excluded or exempted from this part's requirements?

(a) You may exclude vehicles with compression-ignition engines. See 40 CFR part 89 for regulations that cover these engines.

(b) See subpart G of this part and 40 CFR part 1068, subpart C, for exemptions of specific engines.

(c) We may require you to label an engine or vehicle (or both) if this section excludes it and other requirements in this chapter do not apply.

(d) Send the Designated Officer a written request with supporting documentation if you want us to determine whether this part covers or excludes certain vehicles. Excluding engines from this part's requirements does not affect other requirements that may apply to them.

§ 1051.10 What main steps must I take to comply with this part?

(a) You must get a certificate of conformity from us for each engine family before you do any of the following things with a new vehicle or new engine covered by this part: sell, offer for sale, introduce into commerce, distribute or deliver for introduction into

commerce, or import it into the United States. ''New'' vehicles or engines may include some already placed in service (see the definition of ''new'' in § 1051.801). You must get a new certificate of conformity for each new model year.

(b) To get a certificate of conformity and comply with its terms, you must do five things:

(1) Meet the emission standards and other requirements in subpart B of this part.

(2) Perform preproduction emission tests.

(3) Apply for certification (see subpart C of this part).

(4) Do routine emission testing on production vehicles or engines as required by subpart D of this part.

(5) Follow our instructions throughout this part.

(c) Subpart F of this part describes how to test your engines or vehicles (including references to other parts) and when you may test the engine alone instead of the entire vehicle.

(d) Subpart G of this part and 40 CFR part 1068 describe requirements and prohibitions that apply to manufacturers, owners, operators, rebuilders, and all others. They also describe exemptions available for special circumstances.

§ 1051.15 Do any other regulation parts affect me?

(a) Parts 86 and 1065 of this chapter describe procedures and equipment specifications for testing vehicles and engines. Subpart F of this part describes how to apply part 86 or 1065 of this chapter to show you meet the emission standards in this part.

(b) Part 1068 of this chapter describes general provisions, including these seven areas:

(1) Prohibited actions and penalties for manufacturers and others.

(2) Rebuilding and other aftermarket changes.

(3) Exemptions and exclusions for certain vehicles and engines.

(4) Importing vehicles and engines.

(5) Selective enforcement audits of your production.

(6) Defect reporting and recall.

(7) Procedures for hearings.

(c) Other parts of this chapter affect you if referenced in this part.

§ 1051.20 May I certify a recreational engine instead of the vehicle?

(a) You may certify engines sold separately from vehicles in either of two cases:

(1) If you manufacture recreational engines but not recreational vehicles, you may ask to certify the engine alone. In your request, explain why you cannot certify the entire vehicle.

(2) If you manufacture complete recreational vehicles containing engines you also sell separately, you may ask to certify all these engines in a single engine family or in separate engine families.

(b) If you certify an engine under this section, you must use the test procedures in subpart F of this part. If the test procedures require vehicle testing, use good engineering judgment to install the engine in an appropriate vehicle for measuring emissions.

(c) If we allow you to certify recreational engines, the vehicles must meet the applicable emission standards (including evaporative emission standards) with the engines installed in the appropriate vehicles. You must prepare installation instructions as described in § 1051.130 and use good engineering judgment so that the engines will meet emission standards after proper installation in the vehicle.

(d) Identify and label engines you produce under this section consistent with the requirements of § 1051.135. On the emission control information label, identify the manufacturing date of the engine rather than the vehicle.

(e) You may not use the provisions of this section to circumvent or reduce the stringency of this part's standards or other requirements.

(f) If you certify under paragraph (a)(1) of this section, you may ask us to allow you to perform production-line testing on the engine. If you certify under paragraph (a)(2) of this section, use good engineering judgment to ensure that these engines are produced in the same manner as the engines you produce for your vehicles, so that your production-line testing results under subpart D of this part would apply to them.

§ 1051.25 What requirements apply when installing certified engines in recreational vehicles?

(a) If you manufacture recreational vehicles with engines certified under § 1051.20, you need not also certify the vehicle under this part. The vehicle must nevertheless meet emission standards with the engine installed.

(b) You must follow the engine manufacturer's emission-related installation instructions, as described in § 1051.135 and 40 CFR 1068.105. For example, you must use a fuel system that meets the permeation requirements of this part, consistent with the engine manufacturer's instructions.

(c) If you install the engine in a way that makes the engine's emission control information label hard to read during normal engine maintenance, you must place a duplicate label on the vehicle, as described in 40 CFR 1068.105.

Subpart B—Emission Standards and Related Requirements

§ 1051.101 What emission standards and other requirements must my vehicles meet?

(a) You must show that your vehicles meet the following:

(1) The applicable exhaust emission standards in § 1051.103, § 1051.105, or § 1051.107.

(i) For snowmobiles, see § 1051.103.

(ii) For off-highway motorcycles, see § 1051.105.

(iii) For all-terrain vehicles and offroad utility vehicles subject to this part, see § 1051.107.

(2) The evaporative emission standards in § 1051.110.

(3) All the requirements in § 1051.115.

(b) The certification regulations in subpart C of this part describe how you make this showing.

(c) These standards and requirements apply to all testing, including production-line and in-use testing, as described in subparts D and E of this part.

(d) Other sections in this subpart describe other requirements for manufacturers such as labeling or warranty requirements.

(e) It is important that you read § 1051.145 to determine if there are other interim requirements or interim compliance options that apply for a limited time.

(f) As is described in § 1051.1(a)(4), offroad utility vehicles that are subject to this part are subject to the same requirements as ATVs.

§ 1051.103 What are the exhaust emission standards for snowmobiles?

(a) Apply the exhaust emission standards in this section by model year. Measure emissions with the snowmobile test procedures in subpart F of this part.

(1) Follow Table 1 of this section for exhaust emission standards. You may use the averaging, banking, and trading provisions of subpart H of this part to show compliance with these standards (an engine family meets emission standards even if its family emission limit is higher than the standard, as long as you show that the whole averaging set of applicable engine families meet the applicable emission standards using emission credits, and the vehicles within the family meet the family emission limit). Table 1 also shows the maximum value you may specify for a family emission limit, as follows:

TABLE 1 OF § 1051.103—EXHAUST EMISSION STANDARDS FOR SNOWMOBILES (G/KW–HR)

Phase	Model year	Phase-in (percent)	Emission standards			Maximum allowable family emission limits		
			HC	$HC+NO_X$	CO	HC	$HC+NO_X$	CO
Phase 1	2006	50	100	.....	275	.....	.....	.....
Phase 1	2007–2009	100	100	.....	275	.....	.....	.....
Phase 2	2010 and 2011	100	75	.....	275	.....	.....	.....
Phase 3	2012 and later	100	75	(1)	(1)	150	165	400

[1] See § 1051.103(a)(2).

(2) For Phase 3, the $HC+NO_X$ and CO standards are defined by a functional relationship. Choose your corporate average $HC+NO_X$ and CO standards for each model year according to the following criteria:

(i) Prior to production, select the $HC+NO_X$ standard and CO standard (specified as g/kW-hr) so that the combined percent reduction from baseline emission levels is greater than or equal to 100 percent; that is, that the standards comply with the following equation:

$$\left(1-\frac{(HC+NO_x)_{STD}-15}{150}\right)\times 100+\left(1-\frac{CO_{STD}}{400}\right)\times 100 \geq 100$$

(ii) Your corporate average $HC+NO_X$ standard may not be higher than 90 g/kW-hr.

(iii) Your corporate average CO standard may not be higher than 275 g/kW-hr.

(iv) You may use the averaging and banking provisions of subpart H of this part to show compliance with these $HC+NO_X$ and CO standards in this paragraph (a)(2). You may modify your selection of the $HC+NO_X$ and CO standards at the end of the model year under paragraph (a)(2)(i) of this section. You must comply with these final corporate average emission standards.

(b) Apply the exhaust emission standards in this section for snowmobiles using each type of fuel specified in 40 CFR part 1065, subpart C, for which they are designed to operate. You must meet the numerical emission standards for hydrocarbons in this section based on the following types of hydrocarbon emissions for snowmobiles powered by the following fuels:

(1) Gasoline- and LPG-fueled snowmobiles: THC emissions.

(2) Natural gas-fueled snowmobiles: NMHC emissions.

(3) Alcohol-fueled snowmobiles: THCE emissions.

(c) Your snowmobiles must meet emission standards over their full useful life (§ 1051.240 describes how to use deterioration factors to show this). The minimum useful life is 8,000 kilometers, 400 hours of engine operation, or five calendar years, whichever comes first. You must specify a longer useful life in terms of kilometers and hours for the engine family if the average service life of your vehicles is longer than the minimum value, as follows:

(1) Except as allowed by paragraph (c)(2) of this section, your useful life (in kilometers and hours) may not be less than either of the following:

(i) Your projected operating life from advertisements or other marketing materials for any vehicles in the engine family.

(ii) Your basic mechanical warranty for any engines in the engine family.

(2) Your useful life may be based on the average service life of vehicles in the engine family if you show that the average service life is less than the useful life required by paragraph (c)(1) of this section, but more than the minimum useful life (8,000 kilometers or 400 hours of engine operation). In determining the actual average service life of vehicles in an engine family, we will consider all available information and analyses. Survey data is allowed but not required to make this showing.

§ 1051.105 What are the exhaust emission standards for off-highway motorcycles?

(a) Apply the exhaust emission standards in this section by model year. Measure emissions with the off-highway motorcycle test procedures in subpart F of this part.

(1) Follow Table 1 of this section for exhaust emission standards. You may use the averaging, banking, and trading provisions of subpart H of this part to show compliance with the $HC+NO_X$ and/or CO standards (an engine family meets emission standards even if its family emission limit is higher than the standard, as long as you show that the whole averaging set of applicable

engine families meet the applicable emission standards using emission credits, and the vehicles within the family meet the family emission limit). The phase-in values specify the percentage of your U.S.-directed production that must comply with the emission standards for those model years. Calculate this compliance percentage based on a simple count of production units within the engine family. Table 1 follows:

TABLE 1 OF § 1051.105—EXHAUST EMISSION STANDARDS FOR OFF-HIGHWAY MOTORCYCLES (G/KM)

Phase	Model year	Phase-in (percent)	Emission standards		Maximum allowable family emission limits	
			$HC+NO_X$	CO	$HC+NO_X$	CO
Phase 1	2006	50	2.0	25	20.0	50
	2007 and later	100	2.0	25	20.0	50

(2) For model years 2007 and later you may choose to certify all of your off-highway motorcycles to an $HC+NO_X$ standard of 4.0 g/km and a CO standard of 35 g/km, instead of the standards listed in paragraph (a)(1) of this section. To certify to the standards in this paragraph (a)(2), you must comply with the following provisions:

(i) You may not request an exemption for any off-highway motorcycles under § 1051.620

(ii) At least ten percent of your off-highway motorcycles for the model year must have four of the following features:

(A) The absence of a headlight or other lights.

(B) The absence of a spark arrestor.

(C) The absence of manufacturer warranty.

(D) Suspension travel greater than 10 inches.

(E) Engine displacement greater than 50 cc.

(F) The absence of a functional seat.

(iii) You may use the averaging and banking provisions of subpart H of this part to show compliance with this $HC+NO_X$ standard, but not this CO standard. If you use the averaging or banking provisions to show compliance, your FEL for $HC+NO_X$ may not exceed 8.0 g/km for any engine family. You may not use the trading provisions of subpart H of this part.

(3) You may certify off-highway motorcycles with engines that have total displacement of 70 cc or less to the exhaust emission exhaust standards in § 1051.615 instead of certifying them to the exhaust emission standards of this section.

(b) Apply the exhaust emission standards in this section for off-highway motorcycles using each type of fuel specified in 40 CFR part 1068, subpart C, for which they are designed to operate. You must meet the numerical emission standards for hydrocarbons in this section based on the following types of hydrocarbon emissions for off-highway motorcycles powered by the following fuels:

(1) Gasoline- and LPG-fueled off-highway motorcycles: THC emissions.

(2) Natural gas-fueled off-highway motorcycles: NMHC emissions.

(3) Alcohol-fueled off-highway motorcycles: THCE emissions.

(c) Your off-highway motorcycles must meet emission standards over their full useful life (§ 1051.240 describes how to use deterioration factors to show this). The minimum useful life is 10,000 kilometers or five years, whichever comes first. You must specify a longer useful life for the engine family in terms of kilometers if the average service life of your vehicles is longer than the minimum value, as follows:

(1) Except as allowed by paragraph (c)(2) of this section, your useful life (in kilometers) may not be less than either of the following:

(i) Your projected operating life from advertisements or other marketing materials for any vehicles in the engine family.

(ii) Your basic mechanical warranty for any engines in the engine family.

(2) Your useful life may be based on the average service life of vehicles in the engine family if you show that the average service life is less than the useful life required by paragraph (c)(1) of

this section, but more than the minimum useful life (10,000 kilometers). In determining the actual average service life of vehicles in an engine family, we will consider all available information and analyses. Survey data is allowed but not required to make this showing.

§ 1051.107 What are the exhaust emission standards for all-terrain vehicles (ATVs) and offroad utility vehicles?

This section specifies the exhaust emission standards that apply to ATVs. As is described in § 1051.1(a)(4), offroad utility vehicles that are subject to this part are subject to these same standards.

(a) Apply the exhaust emission standards in this section by model year. Measure emissions with the ATV test procedures in subpart F of this part.

(1) Follow Table 1 of this section for exhaust emission standards. You may use the averaging, banking, and trading provisions of subpart H of this part to show compliance with these $HC+NO_X$ standards (an engine family meets emission standards even if its family emission limit is higher than the standard, as long as you show that the whole averaging set of applicable engine families meet the applicable emission standards using emission credits, and the vehicles within the family meet the family emission limit). Table 1 also shows the maximum value you may specify for a family emission limit. The phase-in values in the table specify the percentage of your total U.S.-directed production that must comply with the emission standards for those model years. Calculate this compliance percentage based on a simple count of production units within the engine family. This applies to your total production of ATVs and offroad utility vehicles that are subject to the standards of this part; including both ATVs and offroad utility vehicles subject to the standards of this section and ATVs and offroad utility vehicles certified to the standards of other sections in this part 1051 (such as § 1051.615, but not including vehicles certified under other parts in this chapter (such as 40 CFR part 90). Table 1 follows:

TABLE 1 OF § 1051.107—EXHAUST EMISSION STANDARDS FOR ATVS (G/KM)

Phase	Model year	Phase-in (percent)	Emission standards		Maximum allowable family emission limits	
			$HC+NO_X$	CO	$HC+NO_X$	CO
Phase 1	2006	50	1.5	35	20.0	50
	2007 and later	100	1.5	35	20.0	50

(2) You may certify ATVs with engines that have total displacement of less than 100 cc to the exhaust emission exhaust standards in § 1051.615 instead of certifying them to the exhaust emission standards of this section.

(b) Apply the exhaust emission standards in this section for ATVs using each type of fuel specified in 40 CFR 1065, subpart C for which they are designed to operate. You must meet the numerical emission standards for hydrocarbons in this section based on the following types of hydrocarbon emissions for ATVs powered by the following fuels:

(1) Gasoline- and LPG-fueled ATVs: THC emissions.

(2) Natural gas-fueled ATVs: NMHC emissions.

(3) Alcohol-fueled ATVs: THCE emissions.

(c) Your ATVs must meet emission standards over their full useful life (§ 1051.240 describes how to use deterioration factors to show this). The minimum useful life is 10,000 kilometers, 1000 hours of engine operation, or five years, whichever comes first. You must specify a longer useful life for the engine family in terms of kilometers and hours if the average service life of your vehicles is longer than the minimum value, as follows:

(1) Except as allowed by paragraph (c)(2) of this section, your useful life (in kilometers) may not be less than either of the following:

(i) Your projected operating life from advertisements or other marketing materials for any vehicles in the engine family.

(ii) Your basic mechanical warranty for any engines in the engine family.

(2) Your useful life may be based on the average service life of vehicles in the engine family if you show that the average service life is less than the useful life required by paragraph (c)(1) of this section, but more than the minimum useful life (10,000 kilometers or 1,000 hours of engine operation). In determining the actual average service life of vehicles in an engine family, we will consider all available information and analyses. Survey data is allowed but not required to make this showing.

§ 1051.110 What evaporative emission standards must my vehicles meet?

All of your new vehicles must meet the emission standards of this section over their full useful life, as specified in this section. Note that § 1051.245 allows you to use design-based certification instead of generating new emission data.

(a) Beginning with the 2008 model year, permeation emissions from your vehicle's fuel tank(s) may not exceed 1.5 grams per square-meter per day when measured with the test procedures for tank permeation in subpart F of this part. You may use the averaging, banking, and trading provisions of subpart H of this part to show compliance.

(b) Beginning with the 2008 model year, permeation emissions from your vehicle's fuel lines may not exceed 15 grams per square-meter per day when measured with the test procedures for fuel-line permeation in subpart F of this part. Use the inside diameter of the hose to determine the surface area of the hose.

§ 1051.115 What other requirements must my vehicles meet?

Your vehicles must meet the following requirements:

(a) *Closed crankcase.* Design and produce your vehicles so they release no crankcase emissions into the atmosphere throughout their useful life.

(b) *Emission sampling capability.* Produce all your vehicles to allow sampling of exhaust emissions in the field without damaging the vehicle. Show in your application for certification how this can be done in a way that prevents diluting the exhaust sample with ambient air. To do this, you might simply allow for extending the exhaust pipe by 20 cm; you might also install sample ports in the exhaust (downstream of any aftertreatment devices).

(c) *Adjustable parameters.* If your vehicles have adjustable parameters, they must meet all the requirements of this part for any adjustment in the physically adjustable range. Note that parameters that control the air-fuel ratio may be treated separately under paragraph (d) of this section.

(1) We do not consider an operating parameter adjustable if you permanently seal it or if ordinary tools cannot readily access it.

(2) We may require you to adjust the engine to any specification within the adjustable range during certification testing, production-line testing, selective enforcement auditing, or in-use testing.

(d) *Other adjustments.* This provision applies if an experienced mechanic can change your engine's air-fuel ratio in less than one hour with a few parts whose total cost is under $50 (in 2001 dollars). Examples include carburetor jets and needles. In the case of carburetor jets and needles, your vehicle must meet all the requirements of this part for any air-fuel ratio within the adjustable range described in paragraph (d)(1) of this section.

(1) In your application for certification, specify the adjustable range of air-fuel ratios you expect to occur in use. You may specify it in terms of engine parts (such as the carburetor jet size and needle configuration as a function of atmospheric conditions).

(2) This adjustable range (specified in paragraph (d)(1) of this section) must include all air-fuel ratios between the lean limit and the rich limit, unless you can show that some air-fuel ratios will not occur in use.

(i) The lean limit is the air-fuel ratio that produces the highest engine power output (averaged over the test cycle).

(ii) The rich limit is the richest of the following air-fuel ratios:

(A) The air-fuel ratio that would result from operating the vehicle as you produce it at the specified test conditions. This paragraph (d)(2)(ii)(A) does not apply if you produce the vehicle with an unjetted carburetor so that the vehicle must be jetted by the dealer or operator.

(B) The air-fuel ratio of the engine when you do durability testing.

(C) The richest air-fuel ratio that you recommend to your customers for the applicable ambient conditions.

(3) If the air-fuel ratio of your vehicle is adjusted primarily by changing the carburetor jet size and/or needle configuration, you may submit your recommended jetting chart instead of the range of air-fuel ratios required by paragraph (d)(1) of this section if the following criteria are met:

(i) Good engineering judgment indicates that vehicle operators would not have an incentive to operate the vehicle with richer air-fuel ratios than recommended.

(ii) The chart is based on use of a fuel that is equivalent to the specified test fuel(s). As an alternative you may submit a chart based on a representative in-use fuel if you also provide instructions for converting the chart to be applicable to the test fuel(s).

(iii) The chart is specified in units that are adequate to make it practical for an operator to keep the vehicle properly jetted during typical use. For example, charts that specify jet sizes based on increments of temperature smaller than 20 °F (11.1 °C) or increments of altitude less than 2000 feet would not meet this criteria. Temperature ranges must overlap by at least 5 °F (2.8 °C).

(iv) You follow the jetting chart for durability testing.

(v) You do not produce your vehicles with jetting richer than the jetting chart recommendation for the intended vehicle use.

(4) We may require you to adjust the engine to any specification within the adjustable range during certification testing, production-line testing, selective enforcement auditing, or in-use testing. If we allow you to submit your recommended jetting chart instead of the range of air-fuel ratios required by paragraph (d)(1) of this section, adjust the engine to the richest specification within the jetting chart for the test conditions, unless we specify a leaner setting. We may not specify a setting leaner than that described in paragraph (d)(2)(i) of this section.

(e) *Prohibited controls.* You may not design your engines with emission-control devices, systems, or elements of design that cause or contribute to an unreasonable risk to public health, welfare, or safety while operating. For example, this would apply if the engine emits a noxious or toxic substance it would otherwise not emit that contributes to such an unreasonable risk.

(f) *Defeat devices.* You may not equip your vehicles with a defeat device. A defeat device is an auxiliary emission-control device or other control feature that reduces the effectiveness of emission controls under conditions you may reasonably expect the vehicle to encounter during normal operation and use. This does not apply to auxiliary emission-control devices you identify in your certification application if any of the following is true:

(1) The conditions of concern were substantially included in your prescribed duty cycles.

(2) You show your design is necessary to prevent catastrophic vehicle damage or accidents.

(3) The reduced effectiveness applies only to starting the engine.

(g) *Noise standards.* There are no noise standards specified in this part 1051. See 40 CFR Chapter I, Subchapter G, to determine if your vehicle must meet noise emission standards under another part our regulations.

§ 1051.120 What warranty requirements apply to me?

(a) *General requirements.* You must warrant to the ultimate buyer that the new engine meets two conditions:

(1) It is designed, built, and equipped to conform at the time of sale with the requirements of this part.

(2) It is free from defects in materials and workmanship that may keep it from meeting these requirements.

(b) *Warranty period.* Your emission-related warranty must be valid for at least 50 percent of the vehicle's minimum useful life in kilometers or at least 30 months, whichever comes first.

You may offer an emission-related warranty more generous than we require. This warranty may not be shorter than any published or negotiated warranty you offer for the engine or any of its components. If a vehicle has no odometer, base warranty periods in this paragraph (b) only on the vehicle's age (in years).

(c) *Components covered.* The emission-related warranty must cover components whose failure would increase an engine's emissions, including electronic controls, fuel injection (for liquid or gaseous fuels), exhaust-gas recirculation, aftertreatment, or any other system you develop to control emissions. We generally consider replacing or repairing other components to be the owner's responsibility.

(d) *Scheduled maintenance.* You may schedule emission-related maintenance for a component named in paragraph (c) of this section, subject to the restrictions of § 1051.125. You are not required to cover this scheduled maintenance under your warranty if the component meets either of the following criteria:

(1) The component was in general use on similar engines, and was subject to scheduled maintenance, before January 1, 2000.

(2) Failure of the component would clearly degrade the engine's performance enough that the operator would need to repair or replace it.

(e) *Limited applicability.* You may deny warranty claims under this section if the operator caused the problem, as described in 1068.115 of this chapter. You may ask us to allow you to exclude from your emission-related warranty certified vehicles that have been used significantly for competition, especially certified motorcycles that meet at least four of the criteria in § 1051.620(b)(1).

(f) *Aftermarket parts.* As noted in § 1068.101 of this chapter, it is a violation of the Act to manufacture a vehicle part if one of its main effects is to reduce the effectiveness of the vehicle's emission controls. If you make an aftermarket part, you may—but do not have to—certify that using the part will still allow engines to meet emission standards, as described in § 85.2114 of this chapter.

§ 1051.125 What maintenance instructions must I give to buyers?

Give the ultimate buyer of each new vehicle written instructions for properly maintaining and using the vehicle, including the emission-control system. The maintenance instructions also apply to service accumulation on your test vehicles or engines, as described in 40 CFR part 1065, subpart E.

(a) *Critical emission-related maintenance.* Critical emission-related maintenance includes any adjustment, cleaning, repair, or replacement of air-induction, fuel-system, or ignition components, aftertreatment devices, pulse-air valves, exhaust gas recirculation systems, crankcase ventilation valves, sensors, or electronic control units. This may also include any other component whose only purpose is to reduce emissions or whose failure will increase emissions without significantly degrading engine performance. You may schedule critical emission-related maintenance on these components if you meet the following conditions:

(1) You may ask us to approve critical emission-related maintenance only if it meets two criteria:

(i) Operators are reasonably likely to do the maintenance you call for.

(ii) Vehicles need the maintenance to meet emission standards.

(2) We will accept scheduled maintenance as reasonably likely to occur in use if you satisfy any of four conditions:

(i) You present data showing that, if a lack of maintenance increases emissions, it also unacceptably degrades the vehicle's performance.

(ii) You present survey data showing that 80 percent of vehicles in the field get the maintenance you specify at the recommended intervals.

(iii) You provide the maintenance free of charge and clearly say so in maintenance instructions for the customer.

(iv) You otherwise show us that the maintenance is reasonably likely to be done at the recommended intervals.

(3) You may not schedule critical emission-related maintenance within the minimum useful life period for aftertreatment devices, pulse-air valves, fuel injectors, oxygen sensors,

electronic control units, superchargers, or turbochargers.

(b) *Recommended additional maintenance.* You may recommend, but not require, any additional amount of maintenance on the components listed in paragraph (a) of this section. However, you must make it clear that these maintenance steps are not necessary to keep the emission-related warranty valid. If operators do the maintenance specified in paragraph (a) of this section, but not the recommended additional maintenance, this does not allow you to disqualify them from in-use testing or deny a warranty claim.

(c) *Special maintenance.* You may specify more frequent maintenance to address problems related to special situations such as substandard fuel or atypical engine operation. You may not perform this special maintenance during service accumulation or durability testing.

(d) *Noncritical emission-related maintenance.* For engine parts not listed in paragraph (a) of this section, you may schedule any amount of emission-related inspection or maintenance. But you must state clearly that these steps are not necessary to keep the emission-related warranty valid. Also, do not take these inspection or maintenance steps during service accumulation on your test vehicles or engines.

(e) *Maintenance that is not emission-related.* For maintenance unrelated to emission controls, you may schedule any amount of inspection or maintenance. You may also take these inspection or maintenance steps during service accumulation on your test vehicles or engines. This might include adding engine oil or adjusting chain tension, clutch position, or tire pressure.

(f) *Source of parts and repairs.* Print clearly on the first page of your written maintenance instructions that any repair shop or person may maintain, replace, or repair emission-control devices and systems. Your instructions may not require any component or service identified by brand, trade, or corporate name. Also, do not directly or indirectly condition your warranty on a requirement that the vehicle be serviced by your franchised dealers or any other service establishments with which you have a commercial relationship. You may disregard the requirements in this paragraph (f) if you do one of two things:

(1) Provide a component or service without charge under the purchase agreement.

(2) Get us to waive this prohibition in the public's interest by convincing us the vehicle will work properly only with the identified component or service.

§ 1051.130 What installation instructions must I give to vehicle manufacturers?

(a) If you sell an engine for someone else to install in a recreational vehicle, give the engine buyer written instructions for installing it consistent with the requirements of this part. Include all information necessary to ensure that engines installed this way will meet emission standards.

(b) These instructions must have the following information:

(1) Include the heading: ''Emission-related installation instructions''.

(2) State: ''Failing to follow these instructions when installing a certified engine in a recreational vehicle may violate federal law (40 CFR 1068.105(b)), and subject you to fines or other penalties as described in the Clean Air Act.''.

(3) Describe any other instructions needed to install an exhaust aftertreatment device consistent with your application for certification.

(4) Describe the steps needed to comply with the evaporative emission standards in § 1051.110.

(5) Describe any limits on the range of applications needed to ensure that the engine operates consistently with your application for certification. For example, if your engines are certified only to the snowmobile standards, tell vehicle manufacturers not to install the engines in other vehicles.

(6) Describe any other instructions to make sure the installed engine will operate according to any design specifications you describe in your application for certification.

(7) State: ''If you install the engine in a way that makes the engine's emission control information label hard to

read during normal engine maintenance, you must place a duplicate label on the vehicle, as described in 40 CFR 1068.105.''.

(c) You do not need installation instructions for engines you install in your own vehicles.

§ 1051.135 How must I label and identify the vehicles I produce?

Each of your vehicles must have three labels: a vehicle identification number as described in paragraph (a) of this section, an emission control information label as described in paragraphs (b) through (e) of this section, and a consumer information label as described in paragraph (g) of this section.

(a) Assign each production vehicle a unique identification number and permanently and legibly affix, stamp, or engrave it on the vehicle.

(b) At the time of manufacture, add a permanent label identifying the emission controls for each vehicle. This is the vehicle's ''emission control information label.'' To meet labeling requirements, do the following things:

(1) Attach the label in one piece so it is not removable without being destroyed or defaced.

(2) Design and produce it to be durable and readable for the vehicle's entire life.

(3) Secure it to a part of the vehicle (or engine) needed for normal operation and not normally requiring replacement.

(4) Write it in block letters in English.

(5) Attach the label in a location where it can be easily read.

(c) On your label, do these things:

(1) Include the heading ''EMISSION CONTROL INFORMATION''.

(2) Include your full corporate name and trademark.

(3) State: ''THIS VEHICLE IS CERTIFIED TO OPERATE ON [specify operating fuel or fuels].''.

(4) Identify the emission-control system; your identifiers must use names and abbreviations consistent with SAE J1930 (incorporated by reference in § 1051.810).

(5) List all requirements for fuel and lubricants.

(6) State the date of manufacture [DAY (optional), MONTH, and YEAR]; if you stamp it on the engine and print it in the owner's manual, you may omit this information from the emission control information label.

(7) State: ''THIS VEHICLE MEETS U.S. ENVIRONMENTAL PROTECTION AGENCY REGULATIONS FOR [MODEL YEAR] [SNOWMOBILES or OFF-ROAD MOTORCYCLES or ATVs].''.

(8) Include EPA's standardized designation for the engine family.

(9) State the engine's displacement (in liters) and maximum brake power. You do not need to include the engine's displacement and power on the emission control information label if the vehicle is permanently labeled with a unique model name that corresponds to a specific displacement/power configuration.

(10) State the engine's useful life if it is different than the minimum value.

(11) List specifications and adjustments for engine tuneups; show the proper position for the transmission during tuneup and state which accessories should be operating.

(12) Identify the emission standards or family emission limits to which you have certified the engine.

(d) Some of your engines may need more information on the emission control information label. If you produce an engine or vehicle that we exempt from the requirements of this part, see subpart G of this part and 40 CFR part 1068, subparts C and D, for more label information.

(e) Some engines may not have enough space for an emission control information label with all the required information. In this case, you may omit the information required in paragraphs (c)(3), (c)(4), and (c)(5) of this section if you print it in the owner's manual instead.

(f) If you are unable to meet these labeling requirements, you may ask us to modify them consistent with the intent of this section.

(g) Label every vehicle certified under this part with a removable hangtag showing its emission characteristics relative to other models. The label should be attached securely to the vehicle before it is offered for sale in such

a manner that it would not be accidentally removed prior to sale. Use the applicable equations of this paragraph (g) to determine the normalized emission rate (NER) from the FEL for your vehicle. If the vehicle is certified without using the averaging provisions of subpart H, use the final deteriorated emission level. Round the resulting normalized emission rate for your vehicle to the nearest whole number. We may specify a standardized format for labels. At a minimum, the tag should include: The manufacturer's name, vehicle model name, engine description (500 cc two-stroke with DFI), the NER, and a brief explanation of the scale (for example, note that 0 is the cleanest and 10 is the least clean).

(1) For snowmobiles, use the following equation:

$$NER = 16.61 \times \log(2.667 \times HC + CO) - 38.22$$

Where:

HC and CO are the cycle-weighted FELs (or emission rates) for hydrocarbons and carbon monoxide in g/kW–hr.

(2)(i) For off-highway motorcycles with $HC+NO_X$ emissions less than or equal to 2.0 g/km, use the following equation:

$$(NER = 2.500 \times (HC + NO_X)$$

Where:

$HC + NO_X$ is the FEL (or the sum of the cycle-weighted emission rates) for hydrocarbons and oxides of nitrogen in g/km.

(ii) For off-highway motorcycles with $HC+NO_X$ emissions greater than 2.0 g/km, use the following equation:

$$NER = 5.000 \times \log(HC + NO_X) + 3.495$$

Where:

$HC + NO_X$ is the FEL (or the sum of the cycle-weighted emission rates) for hydrocarbons and oxides of nitrogen in g/km.

(3)(i) For ATVs with $HC+NO_X$ emissions less than or equal to 1.5 g/km, use the following equation:

$$NER = 3.333 \times (HC + NO_X)$$

Where:

$HC + NO_X$ is the FEL (or the sum of the cycle-weighted emission rates) for hydrocarbons and oxides of nitrogen in g/km.

(ii) For ATVs with $HC+NO_X$ emissions greater than 1.5 g/km, use the following equation:

$$NER = 4.444 \times \log(HC + NO_X) + 4.217$$

Where:

$HC + NO_X$ is the FEL (or the sum of the cycle-weighted emission rates) for hydrocarbons and oxides of nitrogen in g/km.

§ 1051.145 What provisions apply only for a limited time?

Apply the following provisions instead of others in this part for the periods and circumstances specified in this section.

(a) *Provisions for small-volume manufacturers.* Special provisions apply to you if you are a small-volume manufacturer subject to the requirements of this part. Contact us before 2006 if you intend to use these provisions.

(1) You may delay complying with otherwise applicable emission standards (and other requirements) for two model years.

(2) If you are a small-volume manufacturer of snowmobiles, only 50 percent of the models you produce (instead of all of the models you produce) must meet emission standards in the first two years they apply to you as a small-volume manufacturer, as described in paragraph (a)(1) of this section. For example, this alternate phase-in allowance would allow small-volume snowmobile manufacturers to comply with the Phase 1 exhaust standards by certifying 50 percent of their snowmobiles in 2008, 50 percent of their snowmobiles in 2009, and 100 percent in 2010.

(3) Your vehicles for model years before 2011 may be exempt from the exhaust standards of this part if you meet the following criteria:

(i) Produce your vehicles by installing engines covered by a valid certificate of conformity under 40 CFR part 90 that shows the engines meet standards for Class II engines for each engine's model year.

(ii) Do not change the engine in a way that we could reasonably expect to increase its exhaust emissions.

(iii) The engine meets all applicable requirements from 40 CFR part 90. This applies to engine manufacturers, vehicle manufacturers who use these engines, and all other persons as if these engines were not used in recreational vehicles.

(iv) Demonstrate that fewer than 50 percent of the engine model's total sales, from all companies, are used in recreational vehicles regulated under this part.

(4) All vehicles certified or exempted under this paragraph (a) must be labeled according to our specifications. The label must include the following:

(i) The heading ''EMISSION CONTROL INFORMATION''.

(ii) Your full corporate name and trademark.

(iii) A description of the provisions under which the vehicle is either exempted or certified.

(iv) Other information that we specify to you in writing.

(b) *Optional emission standards for ATVs.* To meet ATV standards for model years before 2009, you may apply the exhaust emission standards by model year in paragraph (b)(1) of this section while measuring emissions using the engine-based test procedures in 40 CFR part 1065 instead of the chassis-based test procedures in 40 CFR part 86.

(1) Follow Table 1 of this section for exhaust emission standards, while meeting all the other requirements of § 1051.107. You may use emission credits to show compliance with these standards (see subpart H of this part). You may not exchange emission credits with engine families meeting the standards in § 1051.107(a). You may also not exchange credits between engine families certified to the standards for engines above 225 cc and engine families certified to the standards for engines below 225 cc. The phase-in percentages in the table specify the percentage of your U.S.-directed production that must comply with the emission standards for those model years. Table 1 follows:

TABLE 1 OF § 1051.145—OPTIONAL EXHAUST EMISSION STANDARDS FOR ATVS (G/KW–HR)

Engine displacement	Model year	Phase-in (percent)	Emission standards		Maximum allowable family emission limits
			$HC+NO_X$	CO	$HC+NO_X$
<225 cc	2006	50	16.1	400	32.2
	2007 and 2008	100	16.1	400	32.2
≥225 cc	2006	50	13.4	400	26.8
	2007 and 2008	100	13.4	400	26.8

(2) Measure emissions by testing the engine on a dynamometer with the steady-state duty cycle described in Table 2 of this section.

(i) During idle mode, hold the speed within your specifications, keep the throttle fully closed, and keep engine torque under 5 percent of the peak torque value at maximum test speed.

(ii) For the full-load operating mode, operate the engine at its maximum fueling rate.

(iii) See part 1065 of this chapter for detailed specifications of tolerances and calculations.

(iv) Table 2 follows:

TABLE 2 OF § 1051.145—6-MODE DUTY CYCLE FOR RECREATIONAL ENGINES

Mode No.	Engine speed (percent of maximum test speed)	Torque (percent of maximum test torque at test speed)	Minimum time in mode (minutes)	Weighting factors
1	85	100	5.0	0.09
2	85	75	5.0	0.20
3	85	50	5.0	0.29

TABLE 2 OF § 1051.145—6-MODE DUTY CYCLE FOR RECREATIONAL ENGINES—Continued

Mode No.	Engine speed (percent of maximum test speed)	Torque (percent of maximum test torque at test speed)	Minimum time in mode (minutes)	Weighting factors
4	85	25	5.0	0.30
5	85	10	5.0	0.07
6	Idle	0	5.0	0.05

(3) For ATVs certified to the standards in this paragraph (b) use the following equation to determine the normalized emission rate required by § 1051.135(g):

$$NER = 9.898 \times \log(HC + NO_X - 4.898$$

Where:

HC $+NO_X$ is the sum of the cycle-weighted emission rates for hydrocarbons and oxides of nitrogen in g/kW–hr.

(c) *Production-line testing.* Vehicles certified to the Phase 1 or Phase 2 standards in § 1051.103, or the Phase 1 standards in §§ 1051.105 or 1051.107 are exempt from the production-line testing requirements of subpart D of this part if they are certified without participating in the emission averaging, banking and trading program described in Subpart H of this part.

(d) *Phase-in flexibility.* For model years before 2014, if you make a good faith effort to comply, but fail to meet the sales requirements of this part during a phase-in period for new standards, or fail to meet the average emission standards, we may approve an alternative remedy to offset the emission reduction deficit using future emission credits under this part. To apply for this, you must:

(1) Submit a plan during the certification process for the first model year of the phase-in showing how you project to meet the sales requirement of the phase-in.

(2) Notify us less than 30 days after you determine that you are likely to fail to comply with the sales requirement of the phase-in.

(3) Propose a remedy that will achieve equivalent or greater emission reductions compared to the specified phase-in requirements, and that will offset the deficit within one model year.

(e) *Snowmobile testing.* You may use the raw sampling procedures described in 40 CFR part 91, subparts D and E, for emission testing of snowmobiles for model years prior to 2010. For later model years, you may use these procedures if you show that they produce emission measurements equivalent to the otherwise specified test procedures.

(f) *Early credits.* Snowmobile manufacturers may generate early emission credits in one of the following ways, by certifying some or all of their snowmobiles prior to 2006. Credit generating snowmobiles must meet all other applicable requirements of this part. No early credits may be generated by off-highway motorcycles or ATVs.

(1) You may certify one or more snowmobile engine families to FELs (HC and CO) below the numerical level of the Phase 2 standards prior to the date when compliance with the Phase 1 standard is otherwise required. Credits are calculated relative to the Phase 2 standards. Credits generated under this paragraph (f)(1) may be used at any time before 2012.

(2) You may certify a snowmobile engine family to FELs (HC and CO) below the numerical level of the Phase 1 standards prior to the date when compliance with the Phase 1 standard is otherwise required. Credits are calculated relative to the Phase 1 standards. Credits generated under this paragraph (f)(2) may only be used for compliance with the Phase 1 standards. You may generate credits under this paragraph (f)(2) without regard to whether the FELs are above or below the numerical level of the Phase 2 standards.

(g) *Pull-ahead option for permeation emissions.* Manufacturers choosing to comply with an early tank permeation standard of 3.0 g/m^2/day prior to model

year 2008 may be allowed to delay compliance with the 1.5 g/m²/day standard, for an equivalent number of tanks, subject to the following provisions:

(1) Pull-ahead tanks meeting the 3.0 g/m²/day standard must be certified and must meet all applicable requirements other than those limited to compliance with the exhaust standards.

(2) Tanks for which compliance with the 1.5 g/m²/day standard is delayed must meet the 3.0 g/m²/day standard.

(3) You may delay compliance with the 1.5 g/m²/day standard for one tank for one year for each tank-year of credit generated early.

(4) You may not use credits for a tank that is larger than the tank from which you generated the credits.

Subpart C—Certifying Engine Families

§ 1051.201 What are the general requirements for submitting a certification application?

(a) Send us an application for a certificate of conformity for each engine family. Each application is valid for only one model year.

(b) The application must not include false or incomplete statements or information (see § 1051.255).

(c) We may choose to ask you to send us less information than we specify in this subpart, but this would not change your recordkeeping requirements.

(d) Use good engineering judgment for all decisions related to your application (see § 1068.5 of this chapter).

(e) An authorized representative of your company must approve and sign the application.

§ 1051.205 What must I include in my application?

In your application, do all the following things unless we ask you to send us less information:

(a) Describe the engine family's specifications and other basic parameters of the vehicle design. List the types of fuel you intend to use to certify the engine family (for example, gasoline, liquefied petroleum gas, methanol, or natural gas). List vehicle configurations and model names that are included in the engine family.

(b) Explain how the emission-control systems operate.

(1) Describe in detail all the system components for controlling exhaust emissions, including auxiliary emission-control devices and all fuel-system components you will install on any production or test vehicle or engine. Explain why any auxiliary emission-control devices are not defeat devices (see § 1051.115(f)). Do not include detailed calibrations for components unless we ask for them.

(2) Describe the evaporative emission controls.

(c) Describe the vehicles or engines you selected for testing and the reasons for selecting them.

(d) Describe any special or alternate test procedures you used (see § 1051.501).

(e) Describe how you operated the engine or vehicle prior to testing, including the duty cycle and the number of engine operating hours used to stabilize emission levels, and any scheduled maintenance you performed.

(f) List the specifications of the test fuels to show that they fall within the required ranges.

(g) Identify the engine family's useful life.

(h) Propose maintenance and use instructions for the ultimate buyer of each new vehicle (see § 1051.125).

(i) Propose emission-related installation instructions if you sell engines for someone else to install in a vehicle (see § 1051.130).

(j) Propose an emission control information label.

(k) Present emission data to show that you meet emission standards.

(1) Present exhaust emission data for HC, NO_X (as applicable), and CO on a test vehicle or engine to show your vehicles meet the emission standards we specify in subpart B of this part. Show these figures before and after applying deterioration factors for each vehicle or engine. Include test data for each type of fuel from part 1065, subpart C, of this chapter on which you intend for vehicles in the engine family to operate (for example, gasoline, liquefied petroleum gas, methanol, or natural gas). If we specify more than one grade of any fuel type (for example, a summer grade and winter grade of gasoline), you only need to submit test data for

one grade, unless the regulations of this part explicitly specify otherwise for your vehicle.

(2) Present evaporative test data for HC to show your vehicles meet the evaporative emission standards we specify in subpart B of this part. Show these figures before and after applying deterioration factors for each vehicle or engine, where applicable. If you did not perform the testing, identify the source of the test data.

(3) Note that § 1051.235 and 1051.245 allows you to submit an application in certain cases without new emission data.

(l) Report all test results, including those from invalid tests or from any nonstandard tests (such as measurements based on exhaust concentrations in parts per million).

(m) Identify the engine family's deterioration factors and describe how you developed them. Present any emission test data you used for this.

(n) Describe all adjustable operating parameters and other adjustments (see § 1051.115 (c) and (d)), including the following:

(1) The nominal or recommended setting.

(2) The intended physically adjustable range, including production tolerances if they affect the range.

(3) The limits or stops used to establish adjustable ranges.

(4) The air-fuel ratios or jet chart specified in § 1051.115(d).

(o) State that you operated your test vehicles or engines according to the specified procedures and test parameters using the fuels described in the application to show you meet the requirements of this part.

(p) State unconditionally that all the vehicles (and/or engines) in the engine family comply with the requirements of this part, other referenced parts, and the Clean Air Act.

(q) Include estimates of U.S.-directed production volumes.

(r) Show us how to modify your production vehicles to measure emissions in the field (see § 1051.115).

(s) Add other information to help us evaluate your application if we ask for it.

§ 1051.210 May I get preliminary approval before I complete my application?

If you send us information before you finish the application, we will review it and make any appropriate determinations listed in § 1051.215(b)(1) through (5). Decisions made under this section are considered to be preliminary approval. We will generally not disapprove applications under § 1051.215(b)(1) through (5) where we have given you preliminary approval, unless we find new and substantial information supporting a different decision.

(a) If you request preliminary approval related to the upcoming model year or the model year after that, we will make a ''best-efforts'' attempt to make the appropriate determinations as soon as possible. We will generally not provide preliminary approval related to a future model year more than two years ahead of time.

(b) If we have published general guidance that serves as our determination for your situation, you may consider that to be preliminary approval.

§ 1051.215 What happens after I complete my application?

(a) If any of the information in your application changes after you submit it, amend it as described in § 1051.225.

(b) We may deny your application (that is, determine that we cannot approve it without revision) if the engine family does not meet the requirements of this part or the Act. For example:

(1) If you inappropriately use the provisions of § 1051.230(c) or (d) to define a broader or narrower engine family, we will require you to redefine your engine family.

(2) If we determine you did not appropriately select the useful life as specified in § 1051.103(c), § 1051.105(c), or § 1051.107(c), we will require you to lengthen it.

(3) If we determine you did not appropriately select deterioration factors under § 1051.240(c), we will require you to revise them.

(4) If your proposed emission control information label is inconsistent with § 1051.135, we will require you to change it (and tell you how, if possible).

(5) If you require or recommend maintenance and use instructions inconsistent with § 1051.125, we will require you to change them.

(6) If we find any other problem with your application, we will tell you what the problem is, and what needs to be corrected.

(c) If we determine your application is complete and shows that the engine family meets all the requirements of this part and the Act, we will issue a certificate of conformity for your engine family for that model year. If we deny the application, we will explain why in writing. You may then ask us to hold a hearing to reconsider our decision (see § 1051.820).

§ 1051.220 How do I amend the maintenance instructions in my application?

Send the Designated Officer a request to amend your application for certification for an engine family if you want to change the emission-related maintenance instructions in a way that could affect emissions. In your request, describe the proposed changes to the maintenance instructions.

(a) If you are decreasing the specified level of maintenance, you may distribute the new maintenance instructions to your customers 30 days after we receive your request, unless we disapprove your request. We may approve a shorter time or waive this requirement.

(b) If your requested change would not decrease the specified level of maintenance, you may distribute the new maintenance instructions anytime after you send your request.

(c) If you are correcting or clarifying your maintenance instructions or if you are changing instructions for maintenance unrelated to emission controls, the requirements of this section do not apply.

§ 1051.225 How do I amend my application to include new or modified vehicles or to change an FEL?

(a) You must amend your application for certification before you take either of the following actions:

(1) Add a vehicle to a certificate of conformity.

(2) Make a design change for a certified engine family that may affect emissions or an emission-related part over the vehicle's lifetime.

(3) Modify an FEL for an engine family, as described in paragraph (f) of this section.

(b) Send the Designated Officer a request to amend the application for certification for an engine family. In your request, do all of the following:

(1) Describe the vehicle model or configuration you are adding or changing.

(2) Include engineering evaluations or reasons why the original test vehicle or engine is or is not still appropriate.

(3) If the original test vehicle or engine for the engine family is not appropriate to show compliance for the new or modified vehicle, include new test data showing that the new or modified vehicle meets the requirements of this part.

(c) You may start producing the new or modified vehicle anytime after the time at which you send us your request (for example, the day you mail your request). If we determine that the affected vehicles do not meet applicable requirements, we will require you to cease production of the vehicles and to recall and correct the vehicles at no expense to the owner. If you choose to produce vehicles under this paragraph, we will consider that to be consent to recall all vehicles that we determine do not meet applicable standards and other requirements and to remedy the nonconformity at no expense to the owner.

(d) You must give us test data within 30 days if we ask for more testing, or stop producing the vehicle if you are not able to do this. You may give us an engineering evaluation instead of test data if we agree that you can address our questions without test data.

(e) If we determine that the certificate of conformity would not cover your new or modified vehicle, we will send you a written explanation of our decision. In this case, you may no longer produce these vehicles, though you may ask for a hearing for us to reconsider our decision (see § 1051.820).

(f) You may ask to change your FEL in the following cases:

(1) You may ask to raise your FEL for your engine family after the start

of production. You must use the higher FEL for the entire family to calculate your average emission level under subpart H of this part. In your request, you must demonstrate that you will still be able to comply with the applicable average emission standards as specified in subparts B and H of this part.

(2) You may ask to lower the FEL for your engine family after the start of production only when you have test data from production vehicles indicating that your vehicles comply with the lower FEL. You may create a separate subfamily with the lower FEL. Otherwise, you must use the higher FEL for the family to calculate your average emission level under subpart H of this part.

(3) If you change the FEL during production, you must include the new FEL on the emission control information label for all vehicles produced after the change.

§ 1051.230 How do I select engine families?

(a) Divide your product line into families of vehicles that you expect to have similar emission characteristics. Your engine family is limited to a single model year.

(b) Group vehicles in the same engine family if they are the same in all of the following aspects:

(1) The combustion cycle.

(2) The cooling system (water-cooled vs. air-cooled).

(3) Configuration of the fuel system (for example, port fuel injection vs. carburetion).

(4) Method of air aspiration.

(5) The number, location, volume, and composition of catalytic converters.

(6) Type of fuel.

(7) The number, arrangement, and approximate bore diameter of cylinders.

(8) Evaporative emission controls.

(c) In some cases you may subdivide a group of vehicles that is identical under paragraph (b) of this section into different engine families. To do this under normal circumstances, you must show you expect emission characteristics to be different during the useful life or that any of the following engine characteristics are different:

(1) Method of actuating intake and exhaust timing (poppet valve, reed valve, rotary valve, etc.).

(2) Location or size of intake and exhaust valves or ports.

(3) Configuration of the combustion chamber.

(4) Cylinder stroke or actual bore diameter.

(5) Exhaust system.

(d) In some cases, you may include different engines in the same engine family, even though they are not identical with respect to the things listed in paragraph (b) of this section.

(1) If different engines have similar emission characteristics during the useful life, we may approve grouping them in the same engine family.

(2) If you are a small-volume manufacturer, you may group engines from any vehicles subject to the same emission standards into a single engine family. This does not change any of the requirements of this part for showing that an engine family meets emission standards.

(e) If you cannot appropriately define engine families by the method in this section, we will define them based on features related to emission characteristics.

(f) You may ask us to create separate families for exhaust emissions and evaporative emissions. If we do this, list both families on the emission control information label.

§ 1051.235 What emission testing must I perform for my application for a certificate of conformity?

This section describes the emission testing you must perform to show compliance with the emission standards in subpart B of this part during certification.

(a) Test your emission-data vehicles using the procedures and equipment specified in subpart F of this part. Where specifically required or allowed, test the engine instead of the vehicle. For evaporative emissions, test the fuel system components separate from the vehicle.

(b) Select from each engine family a test vehicle or engine, and a fuel system for each fuel type with a configuration that is most likely to exceed the

emission standards, using good engineering judgment, consider the emission levels of all exhaust constituents over the full useful life of the vehicle.

(c) You may use previously generated emission data in the following cases:

(1) You may submit emission data for equivalent engine families from previous years instead of doing new tests, but only if the data show that the test vehicle or engine would meet all the requirements for the latest vehicle or engine models. We may require you to do new emission testing if we believe the latest vehicle or engine models could be substantially different from the previously tested vehicle or engine.

(2) You may submit emission data for equivalent engine families performed to show compliance with other standards (such as California standards) instead of doing new tests, but only if the data show that the test vehicle or engine would meet all of this part's requirements.

(3) You may submit evaporative emission data measured by a fuel system supplier. We may require you to verify that the testing was conducted in accordance with the applicable regulations.

(d) We may choose to measure emissions from any of your test vehicles or engines (or other vehicles or engines in the engine family).

(1) If we do this, you must provide the test vehicle or engine at the location we select. We may decide to do the testing at your plant or any other facility. If we choose to do the testing at your plant, you must schedule it as soon as possible and make available the instruments and equipment we need.

(2) If we measure emissions on one of your test vehicles or engines, the results of that testing become the official data for the vehicle or engine. Unless we later invalidate this data, we may decide not to consider your data in determining if your engine family meets the emission standards.

(3) Before we test one of your vehicles or engines, we may set its adjustable parameters to any point within the physically adjustable ranges (see § 1051.115(c)). We may also adjust the air-fuel ratio within the adjustable range specified in § 1051.115(d).

(4) Calibrate the test vehicle or engine within normal production tolerances for anything not covered by § 1051.115(c) and (d) of this section.

(e) If you are a small-volume manufacturer, you may certify by design on the basis of preexisting exhaust emission data for similar technologies and other relevant information, and in accordance with good engineering judgment. In those cases, you are not required to test your vehicles.

This is called ''design-certification'' or ''certifying by design.'' To certify by design, you must show that the technology used on your engines is sufficiently similar to the previously tested technology that a person reasonably familiar with emission-control technology would believe that your engines will comply with the emission standards.

(f) For fuel tanks that are certified based on permeability treatments for plastic fuel tanks, you do not need to test each engine family. However, you must use good engineering judgment to determine permeation rates for the tanks. This requires that more than one fuel tank be tested for each set of treatment conditions. You may not use test data from a given tank for any other tanks that have thinner walls. You may, however, use test data from a given tank for other tanks that have thicker walls. This applies to both low-hour (*i.e.*, baseline testing) and durability testing. Note that § 1051.245 allows you to use design-based certification instead of generating new emission data.

§ 1051.240 How do I demonstrate that my engine family complies with exhaust emission standards?

(a) For certification, your engine family is considered to be in compliance with the numerical exhaust emission standards in subpart B of this part if all emission-data vehicles representing that family have test results showing emission levels at or below the standards.

(b) Your engine family does not comply if any emission-data vehicle representing that family has test results showing emission levels above the standards for any pollutant.

(c) To compare emission levels from the emission-data vehicle with the emission standards, apply deterioration factors (to three significant figures) to the measured emission levels. The deterioration factor is a number that shows the relationship between exhaust emissions at the end of useful life and at the low-hour test point. Section 1051.520 specifies how to test your vehicle to develop deterioration factors that estimate the change in emissions over your vehicle's full useful life. Small-volume manufacturers may use assigned deterioration factors that we establish. Apply the deterioration factors as follows:

(1) For vehicles that use aftertreatment technology, such as catalytic converters, the exhaust deterioration factor is the ratio of exhaust emissions at the end of useful life to exhaust emissions at the low-hour test point. Adjust the official emission results for each tested vehicle at the selected test point by multiplying the measured emissions by the deterioration factor. If the factor is less than one, use one.

(2) For vehicles that do not use aftertreatment technology, the exhaust deterioration factor is the difference between exhaust emissions at the end of useful life and exhaust emissions at the low-hour test point. Adjust the official emission results for each tested vehicle at the selected test point by adding the factor to the measured emissions. If the factor is less than zero, use zero.

(d) After adjusting the emission levels for deterioration, round them to the same number of decimal places as the emission standard. Compare the rounded emission levels to the emission standard for each test vehicle.

§ 1051.245 How do I demonstrate that my engine family complies with evaporative emission standards?

(a) For certification, your engine family is considered in compliance with the evaporative emission standards in subpart B of this part if you do either of the following:

(1) You have test results showing permeation emission levels from the fuel tanks and fuel lines in the family are at or below the standards in § 1051.110 throughout the useful life.

(2) You comply with the design specifications in paragraph (e) of this section.

(b) Your engine family does not comply if any fuel tank or fuel line representing that family has test results showing emission levels above the standards.

(c) To compare emission levels with the emission standards, apply deterioration factors (to three significant figures) to the measured emission levels. The deterioration factor is a number that shows the relationship between emissions at the end of useful life and at the low-hour test point. For permeation emissions, the deterioration factor is the difference between evaporative emissions at the end of useful life and evaporative emissions at the low-hour test point. Adjust the official emission results for each tested vehicle at the selected test point by adding the factor to the measured emissions. If the factor is less than zero, use zero.

(1) Section 1051.515 specifies how to test your fuel tanks to develop deterioration factors that estimate the change in emissions over your vehicle's full useful life. Small-volume manufacturers may use assigned deterioration factors that we establish. Apply the deterioration factors as follows:

(i) Calculate the deterioration factor from emission tests performed before and after the durability tests described in § 1051.515(c) and using good engineering judgment. The durability tests described in § 1051.515(c) represent the minimum requirements for determining a deterioration factor. You may not use a deterioration factor that is less than the difference between evaporative emissions before and after the durability tests described in § 1051.515(c).

(ii) Do not apply the deterioration factor to test results for tanks that have already undergone these durability tests.

(2) Determine the deterioration factor for fuel lines using good engineering judgment.

(d) After adjusting the emission levels for deterioration, round them to the same number of decimal places as the

emission standard. Compare the rounded emission levels to the emission standard for each test vehicle.

(e) You may demonstrate for certification that your engine family complies with the evaporative emission standards by demonstrating that you use the following control technologies:

(1) For certification to the standards specified in § 1051.110(a) with the control technologies shown in the following table:

TABLE 1 OF § 1051.245—DESIGN-CERTIFICATION TECHNOLOGIES FOR CONTROLLING TANK PERMEATION

If the tank permeability control technology is . . .	Then you may design-certify with a tank emission level of . . .
(i) A metal fuel tank with no non-metal gaskets or with gaskets made from a low-permeability material [1].	1.5 g/m ^{2}/day.
(ii) A metal fuel tank with non-metal gaskets with an exposed surface area of 1000 mm ^{2} or less.	1.5 g/m ^{2}/day.

[1] Permeability of 10 g/m ^{2}/day or less according to ASTM D 814–95 (incorporated by reference in § 1051.810).

(2) For certification to the standards specified in § 1051.110(b) with the control technologies shown in the following table:

TABLE 2 OF § 1051.245—DESIGN-CERTIFICATION TECHNOLOGIES FOR CONTROLLING FUEL-LINE PERMEATION

If the fuel-line permeability control technology is . . .	Then you may design-certify with a fuel line permeation emission level of . . .
(i) Hose meeting Category 1 permeation specifications in SAE J2260 (incorporated by reference in § 1051.810).	15 g/m^2/day.
(ii) Hose meeting the R11–A or R12 permeation specifications in SAE J30 (incorporated by reference in § 1051.810).	15 g/m^2/day.

(3) We may establish additional design certification options where we find that new test data demonstrate that the use of other technology designs will ensure compliance with the applicable emission standards.

§ 1051.250 What records must I keep and make available to EPA?

(a) Organize and maintain the following records to keep them readily available; we may review these records at any time:

(1) A copy of all applications and any summary information you sent us.

(2) Any of the information we specify in § 1051.205 that you did not include in your application.

(3) A detailed history of each emission-data vehicle. In each history, describe all of the following:

(i) The emission-data vehicle's construction, including its origin and buildup, steps you took to ensure that it represents production vehicles, any components you built specially for it, and all emission-related components.

(ii) How you accumulated vehicle or engine operating hours, including the dates and the number of hours accumulated.

(iii) All maintenance (including modifications, parts changes, and other service) and the dates and reasons for the maintenance.

(iv) All your emission tests, including documentation on routine and standard tests, as specified in part 1065 of this chapter or other applicable test procedures regulations, and the date and purpose of each test.

(v) All tests to diagnose engine or emission-control performance, giving the date and time of each and the reasons for the test.

(vi) Any other significant events.

(b) Keep routine data from emission tests (such as test cell temperatures and relative humidity readings) for one year after we issue the associated certificate of conformity. Keep all other information specified in paragraph (a) of this section for eight years after we issue your certificate.

(c) Store these records in any format and on any media, as long as you can promptly send us organized, written records in English if we ask for them.

(d) Send us copies of any maintenance instructions or explanations if we ask for them.

§ 1051.255 When may EPA deny, revoke, or void my certificate of conformity?

(a) We may deny your application for certification if your engine family fails to comply with emission standards or other requirements of the regulation or the Act. Our decision may be based on any information available to us showing you do not meet emission standards or other requirements, including any testing that we conduct under paragraph (g) of this section. If we deny your application, we will explain why in writing.

(b) In addition, we may deny your application or revoke your certificate if you do any of the following:

(1) Refuse to comply with any testing or reporting requirements.

(2) Submit false or incomplete information (paragraph (d) of this section applies if this is fraudulent).

(3) Render inaccurate any test data.

(4) Deny us from completing authorized activities despite our presenting a warrant or court order (see § 1068.20 of this chapter).

(5) Produce vehicle or engines for importation into the United States at a location where local law prohibits us from carrying out authorized activities.

(c) We may void your certificate if you do not keep the records we require or do not give us information when we ask for it.

(d) We may void your certificate if we find that you intentionally submitted false or incomplete information.

(e) We may void your certificate for any family certified to an FEL above the allowable average if you fail to show in your end-of-year report that your average emission levels are below the applicable standards in subpart B of this part, or that you have sufficient credits to offset a credit deficit for the model year.

(f) If we deny your application or revoke or void your certificate, you may ask for a hearing (see § 1051.820). Any such hearing will be limited to substantial and factual issues.

(g) We may conduct confirmatory testing of your vehicles as part of certification. We may deny your application for certification or revoke your certificate if your vehicles fail to comply with emission standards or other requirements during confirmatory testing.

Subpart D—Testing Production-line Engines

§ 1051.301 When must I test my production-line vehicles or engines?

(a) If you certify vehicles to the standards of this part, you must test them as described in this subpart. If your vehicle is certified to g/kW-hr standards, then test the engine; otherwise, test the vehicle. The provisions of this subpart do not apply to small-volume manufacturers.

(b) We may suspend or revoke your certificate of conformity for certain engine families if your production-line vehicles or engines do not meet the requirements of this part or you do not fulfill your obligations under this subpart (see §§ 1051.325 and 1051.340).

(c) Other requirements apply to vehicles and engines that you produce. Other regulatory provisions authorize us to suspend, revoke, or void your certificate of conformity, or order recalls for engines families without regard to whether they have passed these production-line testing requirements. The requirements of this subpart do not affect our ability to do selective enforcement audits, as described in part 1068 of this chapter. Individual vehicles and engines in families that pass these production-line testing requirements must also conform to all applicable regulations of this part and part 1068 of this chapter.

(d) You may ask to use an alternate program for testing production-line vehicles or engines. In your request, you must show us that the alternate program gives equal assurance that your products meet the requirements of this

part. If we approve your alternate program, we may waive some or all of this subpart's requirements.

(e) If you certify an engine family with carryover emission data, as described in § 1051.235(c), and these equivalent engine families consistently pass the production-line testing requirements over the preceding two-year period, you may ask for a reduced testing rate for further production-line testing for that family. The minimum testing rate is one vehicle or engine per engine family. If we reduce your testing rate, we may limit our approval to a any number of model years. In determining whether to approve your request, we may consider the number of vehicles or engines that have failed the emission tests.

(f) We may ask you to make a reasonable number of production-line vehicles or engines available for a reasonable time so we can test or inspect them for compliance with the requirements of this part.

(g) The requirements of this subpart do not apply to engine families certified under the provisions of § 1051.630.

§ 1051.305 How must I prepare and test my production-line vehicles or engines?

(a) *Test procedures.* Test your production-line vehicles or engines using the applicable testing procedures in subpart F of this part to show you meet the emission standards in subpart B of this part.

(b) *Modifying a test vehicle or engine.* Once a vehicle or engine is selected for testing (see § 1051.310), you may adjust, repair, prepare, or modify it or check its emissions only if one of the following is true:

(1) You document the need for doing so in your procedures for assembling and inspecting all your production vehicles or engines and make the action routine for all the vehicles or engines in the engine family.

(2) This subpart otherwise specifically allows your action.

(3) We approve your action in advance.

(c) *Malfunction.* If a vehicle or engine malfunction prevents further emission testing, ask us to approve your decision to either repair it or delete it from the test sequence.

(d) *Setting adjustable parameters.* Before any test, we may adjust or require you to adjust any adjustable parameter to any setting within its physically adjustable range.

(1) We may adjust idle speed outside the physically adjustable range as needed only until the vehicle or engine has stabilized emission levels (see paragraph (e) of this section). We may ask you for information needed to establish an alternate minimum idle speed.

(2) We may make or specify adjustments within the physically adjustable range by considering their effect on emission levels, as well as how likely it is someone will make such an adjustment with in-use vehicles.

(3) We may adjust the air-fuel ratio within the adjustable range specified in § 1051.115(d).

(e) *Stabilizing emission levels.* Before you test production-line vehicles or engines, you may operate the vehicle or engine to stabilize the emission levels. Using good engineering judgment, operate your vehicles or engines in a way that represents the way they will be used. You may operate each vehicle or engine for no more than the greater of two periods:

(1) 50 hours.

(2) The number of hours you operated the emission-data vehicle used for certifying the engine family (see 40 CFR part 1065, subpart E, or the applicable regulations governing how you should prepare your test vehicle or engine).

(f) *Damage during shipment.* If shipping a vehicle or engine to a remote facility for production-line testing makes necessary an adjustment or repair, you must wait until after the after the initial emission test to do this work. We may waive this requirement if the test would be impossible or unsafe, or if it would permanently damage the vehicle or engine. Report to us, in your written report under § 1051.345, all adjustments or repairs you make on test vehicles or engines before each test.

(g) *Retesting after invalid tests.* You may retest a vehicle or engine if you determine an emission test is invalid. Explain in your written report reasons

for invalidating any test and the emission results from all tests. If you retest a vehicle or engine, you may ask us to substitute results of the new tests for the original ones. You must ask us within ten days of testing. We will generally answer within ten days after we receive your information.

§ 1051.310 How must I select vehicles or engines for production-line testing?

(a) Use test results from two vehicles or engines for each engine family to calculate the required sample size for the test period. Update this calculation with each test.

(1) For engine families with projected annual sales of at least 1600, the test periods are consecutive quarters (3 months). If your annual production period is less than 12 months long, define your test periods by dividing your annual production period into approximately equal segments of 70 to 125 calendar days.

(2) For engine families with projected annual sales below 1600, the test period is the whole model year.

(b) Early in each test period, randomly select and test an engine from the end of the assembly line for each engine family.

(1) In the first test period for newly certified engines, randomly select and test one more engine. Then, calculate the required sample size for the test period as described in paragraph (c) of this section.

(2) In later test periods or for engine families relying on previously submitted test data, combine the new test result with the last test result from the previous test period. Then, calculate the required sample size for the new test period as described in paragraph (c) of this section.

(c) Calculate the required sample size for each engine family. Separately calculate this figure for HC, NO_X (or $HC+NO_X$), and CO (and other regulated pollutants). The required sample size is the greater of these calculated values. Use the following equation:

$$N = \left[\frac{(t_{95} \times \sigma}{(x - STD)}\right]^2 + 1$$

Where:

N = Required sample size for the model year.

t_{95} = 95% confidence coefficient, which depends on the number of tests completed, n, as specified in the table in paragraph (c)(1) of this section. It defines 95% confidence intervals for a one-tail distribution.

x = Mean of emission test results of the sample.

STD = Emission standard (or family emission limit, if applicable).

σ = Test sample standard deviation (see paragraph (c)(2) of this section).

(1) Determine the 95% confidence coefficient, t_{95}, from the following table:

n	t_{95}	n	t_{95}	n	t_{95}
2	6.31	12	1.80	22	1.72
3	2.92	13	1.78	23	1.72
4	2.35	14	1.77	24	1.71
5	2.13	15	1.76	25	1.71
6	2.02	16	1.75	26	1.71
7	1.94	17	1.75	27	1.71
8	1.90	18	1.74	28	1.70
9	1.86	19	1.73	29	1.70
10	1.83	20	1.73	30+	1.70
11	1.81	21	1.72	.....	.....

(2) Calculate the standard deviation, σ, for the test sample using the following formula:

$$\sigma = \sqrt{\frac{\sum (X_i - x)^2}{n - 1}}$$

Where:

X_i = Emission test result for an individual vehicle or engine.

n = The number of tests completed in an engine family.

(d) Use final deteriorated test results to calculate the variables in the equations in paragraph (c) of this section (see § 1051.315(a)).

(e) After each new test, recalculate the required sample size using the updated mean values, standard deviations, and the appropriate 95-percent confidence coefficient.

(f) Distribute the remaining vehicle or engine tests evenly throughout the rest of the year. You may need to adjust your schedule for selecting vehicles or engines if the required sample size changes. Continue to randomly select vehicles or engines from each engine family; this may involve testing vehicles or engines that operate on different fuels.

(g) Continue testing any engine family for which the sample mean, x, is greater than the emission standard.

This applies if the sample mean for either HC, NO_X (or $HC+NO_X$), or CO (or other regulated pollutants) is greater than the emission standard. Continue testing until one of the following things happens:

(1) The sample size, n, for an engine family is greater than the required sample size, N, and the sample mean, x, is less than or equal to the emission standard. For example, if N = 3.1 after the third test, the sample-size calculation does not allow you to stop testing.

(2) The engine family does not comply according to § 1051.325.

(3) You test 30 vehicles or engines from the engine family.

(4) You test one percent of your projected annual U.S.-directed production volume for the engine family.

(5) You choose to declare that the engine family fails the requirements of this subpart. (h) If the sample-size calculation allows you to stop testing for a pollutant, you must continue measuring emission levels of that pollutant for any additional tests required under this section. However, you need not continue making the calculations specified in this section for that pollutant. This paragraph does not affect the requirements in section § 1051.320.

(i) You may elect to test more randomly chosen vehicles or engines than we require. Include these vehicles or engines in the sample-size calculations.

§ 1051.315 How do I know when my engine family fails the production-line testing requirements?

This section describes the pass-fail criteria for the production-line testing requirements. We apply this criteria on an engine family basis. See § 1051.320 for the requirements that apply to individual vehicles or engines that fail a production-line test. (a) Calculate your test results. Round them to the number of decimal places in the emission standard expressed to one more decimal place.

(1) *Initial and final test results.* Calculate and round the test results for each vehicle or engine. If you do several tests on a vehicle or engine, calculate the initial test results, then add them together and divide by the number of tests and round for the final test results on that vehicle or engine.

(2) *Final deteriorated test results.* Apply the deterioration factor for the engine family to the final test results (see § 1051.240(c)).

(b) Construct the following CumSum Equation for each engine family for HC, NO_X (or $HC+NO_X$), and CO emissions (and other regulated pollutants):

$$C_i = C_{i-1} + X_i - (STD + 0.25 \times \sigma)$$

Where:

C_i = The current CumSum statistic.

C_{i-1} = The previous CumSum statistic. For the first test, the CumSum statistic is 0 (*i.e.* $C_1 = 0$).

X_i = The current emission test result for an individual vehicle or engine.

STD = Emission standard.

(c) Use final deteriorated test results to calculate the variables in the equation in paragraph (b) of this section (see § 1051.315(a)).

(d) After each new test, recalculate the CumSum statistic.

(e) If you test more than the required number of vehicles or engines, include the results from these additional tests in the CumSum Equation.

(f) After each test, compare the current CumSum statistic, C_i, to the recalculated Action Limit, H, defined as $H = 5.0 \times \sigma$.

(g) If the CumSum statistic exceeds the Action Limit in two consecutive tests, the engine family fails the production-line testing requirements of this subpart. Tell us within ten working days if this happens. You may request to amend the application for certification to raise the FEL of the engine family at this point if you meet the requirements of § 1051.225(f).

(h) If you amend the application for certification for an engine family under § 1051.225, do not change any previous calculations of sample size or CumSum statistics for the model year.

§ 1051.320 What happens if one of my production-line vehicles or engines fails to meet emission standards?

(a) If you have a production-line vehicle or engine with final deteriorated test results exceeding one or more emission standards (see § 1051.315(a)), the certificate of conformity is automatically suspended for that failing vehicle or engine. You must take the following actions before your certificate

of conformity can cover that vehicle or engine:

(1) Correct the problem and retest the vehicle or engine to show it complies with all emission standards.

(2) Include in your written report a description of the test results and the remedy for each vehicle or engine (see § 1051.345).

(b) You may request to amend the application for certification to raise the FEL of the entire engine family at this point (see § 1051.225).

§ 1051.325 What happens if an engine family fails the production-line requirements?

(a) We may suspend your certificate of conformity for an engine family if it fails under § 1051.315. The suspension may apply to all facilities producing vehicles or engines from an engine family, even if you find noncompliant vehicles or engines only at one facility.

(b) We will tell you in writing if we suspend your certificate in whole or in part. We will not suspend a certificate until at least 15 days after the engine family fails. The suspension is effective when you receive our notice.

(c) Up to 15 days after we suspend the certificate for an engine family, you may ask for a hearing (see § 1051.820). If we agree before a hearing that we used erroneous information in deciding to suspend the certificate, we will reinstate the certificate.

(d) Section 1051.335 specifies steps you must take to remedy the cause of the production-line failure. All the vehicles you have produced since the end of the last test period are presumed noncompliant and should be addressed in your proposed remedy. We may require you to apply the remedy to engines produced earlier if we determine that the cause of the failure is likely to have affected the earlier engines.

(e) You may request to amend the application for certification to raise the FEL of the engine family before or after we suspend your certificate if you meet the requirements of § 1051.225(f).

§ 1051.330 May I sell vehicles from an engine family with a suspended certificate of conformity?

You may sell vehicles that you produce after we suspend the engine family's certificate of conformity under § 1051.315 only if one of the following occurs:

(a) You test each vehicle or engine you produce and show it complies with emission standards that apply.

(b) We conditionally reinstate the certificate for the engine family. We may do so if you agree to recall all the affected vehicles and remedy any noncompliance at no expense to the owner if later testing shows that the engine family still does not comply.

§ 1051.335 How do I ask EPA to reinstate my suspended certificate?

(a) Send us a written report asking us to reinstate your suspended certificate. In your report, identify the reason for noncompliance, propose a remedy for the engine family, and commit to a date for carrying it out. In your proposed remedy include any quality control measures you propose to keep the problem from happening again.

(b) Give us data from production-line testing that shows the remedied engine family complies with all the emission standards that apply.

§ 1051.340 When may EPA revoke my certificate under this subpart and how may I sell these vehicles again?

(a) We may revoke your certificate for an engine family in the following cases:

(1) You do not meet the reporting requirements.

(2) Your engine family fails to comply with the requirements of this subpart and your proposed remedy to address a suspended certificate under § 1051.325 is inadequate to solve the problem or requires you to change the vehicle's design or emission-control system.

(b) To sell vehicles from an engine family with a revoked certificate of conformity, you must modify the engine family and then show it complies with the requirements of this part.

(1) If we determine your proposed design change may not control emissions for the vehicle's full useful life, we will tell you within five working days after receiving your report. In this case we will decide whether production-line

testing will be enough for us to evaluate the change or whether you need to do more testing.

(2) Unless we require more testing, you may show compliance by testing production-line vehicles or engines as described in this subpart.

(3) We will issue a new or updated certificate of conformity when you have met these requirements.

§ 1051.345 What production-line testing records must I send to EPA?

Do all the following things unless we ask you to send us less information:

(a) Within 30 calendar days of the end of each calendar quarter, send us a report with the following information:

(1) Describe any facility used to test production-line vehicles or engines and state its location.

(2) State the total U.S.-directed production volume and number of tests for each engine family.

(3) Describe how you randomly selected vehicles or engines.

(4) Describe your test vehicles or engines, including the engine family's identification and the vehicle's model year, build date, model number, identification number, and number of hours of operation before testing for each test vehicle or engine.

(5) Identify where you accumulated hours of operation on the vehicles or engines and describe the procedure and schedule you used.

(6) Provide the test number; the date, time and duration of testing; test procedure; initial test results before and after rounding; final test results; and final deteriorated test results for all tests. Provide the emission results for all measured pollutants. Include information for both valid and invalid tests and the reason for any invalidation.

(7) Describe completely and justify any nonroutine adjustment, modification, repair, preparation, maintenance, or test for the test vehicle or engine if you did not report it separately under this subpart. Include the results of any emission measurements, regardless of the procedure or type of vehicle.

(8) Provide the CumSum analysis required in § 1051.315 for each engine family.

(9) Report on each failed vehicle or engine as described in § 1051.320.

(10) State the date the calendar quarter ended for each engine family.

(b) We may ask you to add information to your written report, so we can determine whether your new vehicles conform with the requirements of this subpart.

(c) An authorized representative of your company must sign the following statement:

> We submit this report under Sections 208 and 213 of the Clean Air Act. Our production-line testing conformed completely with the requirements of 40 CFR part 1051. We have not changed production processes or quality-control procedures for the engine family in a way that might affect the emission control from production vehicles (or engines). All the information in this report is true and accurate, to the best of my knowledge. I know of the penalties for violating the Clean Air Act and the regulations. (Authorized Company Representative)

(d) Send electronic reports of production-line testing to the Designated Officer using an approved information format. If you want to use a different format, send us a written request with justification for a waiver.

(e) We will send copies of your reports to anyone from the public who asks for them. See § 1051.815 for information on how we treat information you consider confidential.

§ 1051.350 What records must I keep?

(a) Organize and maintain your records as described in this section. We may review your records at any time, so it is important to keep required information readily available.

(b) Keep paper records of your production-line testing for one full year after you complete all the testing required for an engine family in a model year. You may use any additional storage formats or media if you like.

(c) Keep a copy of the written reports described in § 1051.345.

(d) Keep the following additional records:

(1) A description of all test equipment for each test cell that you can use to test production-line vehicles or engines.

(2) The names of supervisors involved in each test.

(3) The name of anyone who authorizes adjusting, repairing, preparing, or modifying a test vehicle or engine and

the names of all supervisors who oversee this work.

(4) If you shipped the vehicle or engine for testing, the date you shipped it, the associated storage or port facility, and the date the vehicle or engine arrived at the testing facility.

(5) Any records related to your production-line tests that are not in the written report.

(6) A brief description of any significant events during testing not otherwise described in the written report or in this section.

(7) Any information specified in § 1051.345 that you do not include in your written reports.

(e) If we ask, you must give us projected or actual production figures for an engine family. We may ask you to divide your production figures by rated brake power, displacement, fuel type, or assembly plant (if you produce vehicles or engines at more than one plant).

(f) Keep a list of vehicle or engine identification numbers for all the vehicles or engines you produce under each certificate of conformity. Give us this list within 30 days if we ask for it.

(g) We may ask you to keep or send other information necessary to implement this subpart.

Subpart E—Testing In-use Engines [Reserved]

Subpart F—Test Procedures

§ 1051.501 What procedures must I use to test my vehicles or engines?

This section describes test procedures that you use to show compliance with the requirements of this part. See § 1051.235 to determine when testing is required for certification. See subpart D of this part for the production-line testing requirements.

(a) *Snowmobiles.* For snowmobiles, use the equipment and procedures for spark-ignition engines in part 1065 of this chapter to show your snowmobiles meet the duty-cycle emission standards in § 1051.103. Measure HC, NO_X (as applicable), CO, and CO_2 emissions using the dilute sampling procedures in part 1065 of this chapter. For steady-state testing, you may use raw-gas sampling methods (such as those described in 40 CFR part 91), provided they have been shown to produce measurements equivalent to the dilute sampling methods specified in part 1065 of this chapter. Use the duty cycle in § 1051.505.

(b) *Motorcycles and ATVs.* For motorcycles and ATVs, use the equipment, procedures, and duty cycle in 40 CFR part 86, subpart F, to show your vehicles meet the exhaust emission standards in § 1051.105 or § 1051.107. Measure HC, NO_X, CO, and CO_2. If we allow you to certify ATVs based on engine testing, use the equipment, procedures, and duty cycle described or referenced in that section that allows engine testing. For motorcycles with engine displacement at or below 169 cc and all ATVs, use the driving schedule in paragraph (c) of Appendix I to 40 CFR part 86. For all other motorcycles use the driving schedule in paragraph (b) of Appendix I to part 86. With respect to vehicle-speed governors, test motorcycles and ATVs in their ungoverned configuration, unless we approve in advance testing in a governed configuration. We will only approve testing in a governed configuration if you can show that the governor is permanently installed on all production vehicles and is unlikely to be removed in-use. With respect to engine-speed governors, test motorcycles and ATVs in their governed configuration.

(c) *Permeation testing.* (1) Use the equipment and procedures specified in § 1051.515 to measure fuel tank permeation emissions.

(2) Prior to permeation testing of fuel hose, the hose must be preconditioned by filling the hose with the fuel specified in (d)(3) of this section, sealing the openings, and soaking the hose for 4 weeks at 23 °C±5 °C. To measure fuel-line permeation emissions, use the equipment and procedures specified in SAE J30 (incorporated by reference in § 1051.810). The measurements must be performed at 23 °C using the fuel specified in paragraph (d)(3) of this section.

(d) *Fuels.* Use the fuels meeting the following specifications:

(1) *Exhaust.* Use the fuels and lubricants specified in 40 CFR part 1065, subpart C, for all the testing and service accumulation we require in this part.

(2) *Fuel Tank Permeation.* (i) For the preconditioning soak described in § 1051.515(a)(1) and fuel slosh durability test described in § 1051.515(c)(4), use the fuel specified in Table 1 of § 1065.210 of this chapter blended with 10 percent ethanol by volume. As an alternative, you may use Fuel CE10, which is Fuel C as specified in ASTM D 471–98 (incorporated by reference in § 1051.810) blended with 10 percent ethanol by volume.

(ii) For the permeation measurement test in § 1051.515(b), use the fuel specified in Table 1 of § 1065.210 of this chapter. As an alternative, you may use the fuel specified in paragraph (d)(2)(i) of this section.

(3) *Fuel Hose Permeation.* Use the fuel specified in Table 1 of § 1065.210 of this chapter blended with 10 percent ethanol by volume for permeation testing of fuel lines and tanks. As an alternative, you may use Fuel CE10, which is Fuel C as specified in ASTM D 471–98 (incorporated by reference in § 1051.810) blended with 10 percent ethanol by volume.

(e) *Special procedures for engine testing.* (1) You may use special or alternate procedures, as described in § 1065.10 of this chapter.

(2) We may reject data you generate using alternate procedures if later testing with the procedures in part 1065 of this chapter shows contradictory emission data.

(f) *Special procedures for vehicle testing.* (1) You may use special or alternate procedures, as described in paragraph (f)(3) of this section.

(2) We may reject data you generate using alternate procedures if later testing with the otherwise specified procedures shows contradictory emission data.

(3)(i) The test procedures specified for vehicle testing are intended to produce emission measurements equivalent to those that would result from measuring emissions during in-use operation using the same vehicle configuration. If good engineering judgment indicates that use of the procedures in this part for a vehicle would result in measurements that are not representative of in-use operation of that vehicle, you must notify us. If we determine that using these procedures would result in measurements that are significantly unrepresentative and that changes to the procedures will result in more representative measurements that do not decrease the stringency of emission standards or other requirements, we will specify changes to the procedures. In your notification to us, you should recommend specific changes you think are necessary.

(ii) You may ask to use emission data collected using other test procedures, such as those of the California Air Resources Board or the International Organization for Standardization. We will allow this only if you show us that these data are equivalent to data collected using our test procedures.

(iii) You may ask to use alternate procedures that produce measurements equivalent to those obtained using the specified procedures. In this case, send us a written request showing that your alternate procedures are equivalent to the test procedures of this part. If you prove to us that the procedures are equivalent, we will allow you to use them. You may not use alternate procedures until we approve them.

(iv) You may ask to use special test procedures if your vehicle cannot be tested using the specified test procedures (for example, it is incapable of operating on the specified transient cycle). In this case, send us a written request showing that you cannot satisfactorily test your engines using the test procedures of this part. We will allow you to use special test procedures if we determine that they would produce emission measurements that are representative of those that would result from measuring emissions during in-use operation. You may not use special procedures until we approve them.

§ 1051.505 What special provisions apply for testing snowmobiles?

Use the following special provisions for testing snowmobiles:

(a) Measure emissions by testing the engine on a dynamometer with the steady-state duty cycle described in the following Table:

TABLE 1 OF § 1051.505—5–MODE DUTY CYCLE FOR SNOWMOBILES

	Engine speed (percent of maximum test speed)	Torque (percent of maximum test torque at maximum test speed)	Minimum time in mode (minutes)	Weighting factors
Mode number:				
1	100	100	3.0	0.12
2	85	51	3.0	0.27
3	75	33	3.0	0.25
4	65	19	3.0	0.31
5	Idle	0	3.0	0.05

(b) During idle mode, operate the engine with the following parameters:

(1) Hold the speed within your specifications.

(2) Keep the throttle at the idle-stop position.

(3) Keep engine torque under 5 percent of the peak torque value at maximum test speed.

(c) For the full-load operating mode, operate the engine at wide-open throttle.

(d) Ambient temperatures during testing must be between 20 °C and 30 °C (68 °F and 86 °F), or other representative test temperatures, as specified in paragraph (g) of this section.

(e) See part 1065 of this chapter for detailed specifications of tolerances and calculations.

(f) You may test snowmobiles at ambient temperatures below 20 °C or using intake air temperatures below 20 °C if you show that such testing complies with § 1065.10(c)(1) of this chapter. You must get our approval before you begin the emission testing. For example, the following approach would be appropriate to show that such testing complies with § 1065.10(c)(1) of this chapter:

(1) Using good engineering judgment, instrument a representative snowmobile built with a representative engine from the family being tested with an appropriate temperature measuring device located in the intake air plenum where fuel spitback is not likely to occur.

(2) Choose a time and location with the following weather conditions: windspeed less than 10 knots, no falling precipitation, air temperature between −20 °C and 0 °C (−4 °F and 32 °F).

(3) Operate the snowmobile until its engine reaches a steady operating temperature.

(4) Operate the snowmobile on a level surface free of other vehicle traffic. Operate the snowmobile at each specified engine speed corresponding to each mode in the emissions test specific to the engine being tested. When readings are stable, record the temperature in the intake air plenum and the ambient temperature. Calculate the temperature difference between the air in the plenum and the ambient air for each mode.

(5) Calculate the nominal intake air test temperature for each test mode as −10 °C (14 °F) plus the temperature difference for the corresponding mode determined in (g)(4) of this section.

(6) Before the emissions test, select the appropriate carburetor jetting for −10 °C (14 °F) conditions according to the jet chart. For each mode, maintain the inlet air temperature within 5 °C of the corresponding modal temperature calculated in (g)(5) of this section.

(7) Adjust other operating parameters to be consistent with operation at −10 °C (14 °F). For example, this may require that you modify the engine cooling system used in the laboratory to make its performance representative of cold-temperature operation.

§ 1051.510 What special provisions apply for testing ATV engines? [Reserved]

§ 1051.515 How do I test my fuel tank for permeation emissions?

Measure permeation emissions by weighing a sealed fuel tank before and after a temperature-controlled soak.

(a) *Preconditioning.* To precondition your fuel tank, follow these five steps:

(1) Fill the tank with the fuel specified in § 1051.501(d)(2)(i), seal it, and allow it to soak at 28 ±5 °C for 20 weeks. Alternatively, the tank may be soaked for a shorter period of time at a higher temperature if you can show that the hydrocarbon permeation rate has stabilized.

(2) Determine the fuel tank's internal surface area in square-meters accurate to at least three significant figures. You may use less accurate estimates of the surface area if you make sure not to overestimate the surface area.

(3) Fill the fuel tank with the test fuel specified in § 1051.501(d)(2)(ii) to its nominal capacity. If you fill the tank inside the temperature-controlled room or enclosure, do not spill any fuel.

(4) Allow the tank and its contents to equilibrate to 28±2 °C.

(5) Seal the fuel tank using nonpermeable fittings, such as metal or Teflon™.

(b) *Test run.* To run the test, follow these nine steps for a tank that was preconditioned as specified in paragraph (a) of this section:

(1) Weigh the sealed fuel tank and record the weight to the nearest 0.1 grams. (You may use less precise weights as long as the difference in mass from the start of the test to the end of the test has at least three significant figures.)

(2) Carefully place the tank within a ventilated temperature-controlled room or enclosure. Do not spill any fuel.

(3) Close the room or enclosure and record the time.

(4) Ensure that the measured temperature in the room or enclosure is 28±2 °C.

(5) Leave the tank in the room or enclosure for 2 to 4 weeks, consistent with good engineering judgment (based on the permeation rate). Do not stop soaking before 4 weeks unless you know that you can measure the weight loss during the test to at least three significant figures earlier.

(6) Hold the temperature of the room or enclosure to 28±2 °C; measure and record the temperature at least daily.

(7) At the end of the soak period, weigh the sealed fuel tank and record the weight to the nearest 0.1 grams. (You may use less precise weights as long as the difference in mass from the start of the test to the end of the test has at least three significant figures.)

(8) Subtract the weight of the tank at the end of the test from the weight of the tank at the beginning of the test; divide the difference by the internal surface area of the fuel tank. Divide this g/m^2 value by the number of test days (using at least three significant figures) to calculate the g/m^2/day emission rate. Example: If a tank with an internal surface area of 1.51 m^2 weighed 31882.3 grams at the beginning of the test and weighed 31760.2 grams after soaking for 25.03 days, then the g/m^2/day emission rate would be: (31882.3 g − 31760.2 g)/1.51 m^2/25.03 days = 3.23 g/m^2/day.

(9) Round your result to the same number of decimal places as the emission standard.

(c) *Durability testing.* You normally need to perform a separate durability demonstration for each substantially different combination of treatment approaches and tank materials. Perform these demonstrations before an emission test by taking the following steps, unless you can use good engineering judgment to apply the results of previous durability testing with a different fuel system. You can determine a deterioration factor by measuring emissions on a tank after these durability tests if you previously tested the same tank before the durability tests (but after the preconditioning step described in paragraph (a) of this section). For the purposes of deterioration factor determination, the permeation tests before and after the durability testing must be performed on the fuel specified in § 1051.501 (d)(2)(i). You may

ask to exclude any of the following durability tests if you can clearly demonstrate that it does not affect the emissions from your fuel tank.

(1) Perform a pressure test by sealing the tank and cycling it between +2.0 psig and −0.5 psig and back to +2.0 psig for 10,000 cycles at a rate 60 seconds per cycle.

(2) Perform a sunlight-exposure test by exposing the tank to an ultraviolet light of at least 0.40 W-hr/m^2/min on the tank surface for 15 hours per day for 4 weeks. Alternatively, the fuel tank may be exposed to direct natural sunlight for an equivalent period of time, as long as you ensure that the tank is exposed to at least 450 daylight hours.

(3) Perform a slosh test by filling the tank to 40 percent of its capacity with the fuel specified in §1051.501(d)(2)(i) and rocking it at a rate of 15 cycles per minute until you reach one million total cycles.

Use an angle deviation of +15° to −15° from level. This test must be performed at a temperature of 28 °C ±5 °C.

(4) Following the durability testing, the fuel tank must be soaked (as described in paragraph (a) of this section) to ensure that the permeation rate is stable. The period of slosh testing and the period of ultraviolet testing (if performed with fuel in the tank consistent with paragraph (a)(1) of this section) may be considered to be part of this soak, provided that the soak begins immediately after the slosh testing. To determine the final permeation rate, drain and refill the tank with fresh fuel, and repeat the test run (as described in paragraph (b) of this section) immediately after this soak period.

(d) *Flow chart.* The following figure presents a flow chart for the permeation testing described in this section, showing full test procedure with durability testing, as well as the simplified test procedure with an applied deterioration factor:

Figure 1051.515-1: Flow Chart of Permeation Test Procedure with and without DF Determination

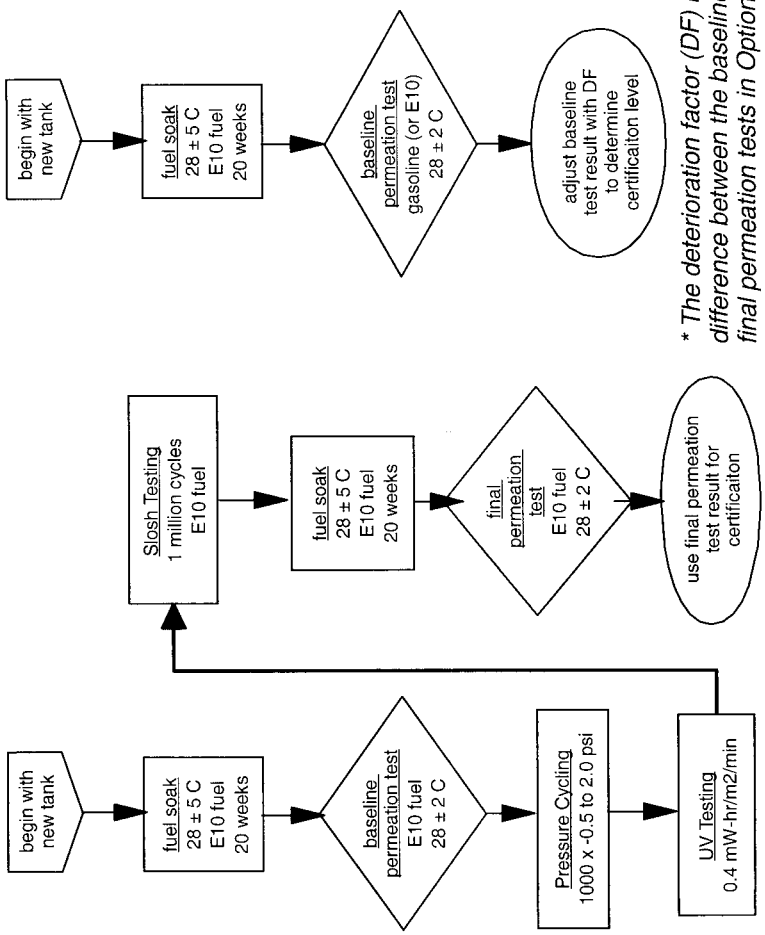

§ 1051.520 How do I perform exhaust durability testing?

This section applies for durability testing to determine deterioration factors for exhaust emissions. Small-volume manufacturers may omit durability testing if they use our assigned deterioration factors that we establish based on our projection of the likely deterioration in the performance of specific emission controls.

(a) Calculate your deterioration factor by testing a vehicle or engine that is representative of your engine family at a low-hour test point and the end of its useful life. You may also test at intermediate points.

(b) Operate the vehicle or engine over a representative duty cycle for a period at least as long as the useful life (in hours or kilometers). You may operate the vehicle or engine continuously.

(c) You may perform critical emission-related maintenance during durability testing, consistent with § 1051.125(a). You may not perform any

other emission-related maintenance during durability testing.

(d) Use a linear least-squares fit of your test data for each pollutant to calculate your deterioration factor.

(e) You may ask us to allow you to use other testing methods to determine deterioration factors, consistent with good engineering judgment.

Subpart G—Compliance Provisions

§ 1051.601 What compliance provisions apply to vehicles and engines subject to this part?

Engine and vehicle manufacturers, as well as owners, operators, and rebuilders of these vehicles, and all other persons, must observe the requirements and prohibitions in part 1068 of this chapter and the requirements of the Act. The compliance provisions in this subpart apply only to the vehicles and engines we regulate in this part.

§ 1051.605 What are the provisions for exempting vehicles from the requirements of this part if they use engines you have certified under the motor-vehicle program or the Large Spark-ignition program?

(a) You may ask for an exemption under this section if you are the manufacturer of an engine certified under the motor-vehicle program or the Large Spark-ignition program. See § 1051.610 if you are not the engine manufacturer.

(b)(1) The only requirements or prohibitions from this part that apply to a vehicle that is exempt under this section are in this section and § 1051.610.

(2) If the vehicles do not meet the criteria listed in paragraph (c) of this section, they will be subject to the standards and prohibitions of this part. Producing these vehicles without a valid exemption or certificate of conformity would violate the prohibitions in § 1068.101 of this chapter.

(3) Vehicles exempted under this section are subject to all the requirements affecting engines and vehicles under 40 CFR part 86 or part 1048, as applicable. The requirements and restrictions of 40 CFR part 86 or 1048 apply to anyone manufacturing these engines, anyone manufacturing vehicles that use these engines, and all other persons in the same manner as if these engines were used in a motor vehicle or other nonrecreational application.

(c) If you meet all the following criteria regarding your engine, the vehicle using the engine is exempt under this section:

(1) The vehicle is produced using an engine or incomplete vehicle covered by a valid certificate of conformity under 40 CFR part 86 or part 1048.

(2) No changes are made to the certified engine or vehicle that we could reasonably expect to increase any of its regulated emissions. For example, if any of the following changes are made to the engine, it does not qualify for this exemption:

(i) Any fuel system or evaporative system parameters are changed from the certified configuration (this does not apply to refueling emission controls).

(ii) Any other emission-related components are changed.

(iii) The engine cooling system is modified or assembled so that temperatures or heat rejection rates are outside the original engine's specified ranges.

(3) The engine must have the emission control information label we require under 40 CFR part 86 or part 1048.

(4) You must demonstrate that fewer than 50 percent of the engine model's total sales, from all companies, are used in recreational vehicles.

(d) If you manufacture both the engine and vehicle under this exemption, you must do all of the following to keep the exemption valid:

(1) Make sure the original emission control information label is intact.

(2) Add a permanent supplemental label to the engine in a position where it will remain clearly visible after installation in the vehicle. In your engine's emission control information label, do the following:

(i) Include the heading: ''Recreational Vehicle Emission Control Information''.

(ii) Include your full corporate name and trademark.

(iii) State: ''THIS ENGINE WAS ADAPTED FOR RECREATIONAL USE WITHOUT AFFECTING ITS EMISSION CONTROLS.''.

(iv) State the date you finished installation (month and year).

(3) Make sure the original and supplemental labels are readily visible after the engine is installed in the vehicle or, if the vehicle obscures the engine's emission control information label, make sure the vehicle manufacturer attaches duplicate labels, as described in § 1068.105 of this chapter.

(4) Send the Designated Officer a signed letter by the end of each calendar year (or less often if we tell you) with all the following information:

(i) Identify your full corporate name, address, and telephone number.

(ii) List the models you expect to produce under this exemption in the coming year.

(iii) State: ''We produce each listed model for recreational application without making any changes that could increase its certified emission levels, as described in 40 CFR 1051.605.''.

(e) If we request it, you must send us emission test data on the applicable recreational duty cycle(s). You may include the data in your application for certification under 40 CFR part 86 or part 1048, or in your letter requesting the exemption. We will generally not ask you for these data under normal circumstances, especially when they are more readily available from another source.

§ 1051.610 What are the provisions for producing recreational vehicles with engines already certified under the motor-vehicle program or the Large SI program?

(a) You may produce a recreational vehicle without certifying it under this part by using a certified motor vehicle engine, or Large SI engine. This section does not apply if you manufacture the engine yourself; see § 1051.605. In order to produce recreational vehicles under this section, you must meet all of the following criteria:

(1) The engine or vehicle is certified to 40 CFR part 86 or part 1048.

(2) The engine is not adjusted outside the certifying manufacturer's specifications (see § 1051.605(c)(2)).

(3) The engine or vehicle is not modified in any way that may affect its emission control. This does not apply to refueling emission controls.

(4) The vehicle is labeled consistent with paragraph (c) of this section.

(b)(1) The only requirements or prohibitions from this part that apply to a vehicle that is exempt under this section are in this section and § 1051.605.

(2) If the vehicles do not meet the criteria listed in § 1051.605(c) and paragraph (c) of this section, they will be subject to the standards and prohibitions of this part. Producing these vehicles without a valid exemption or certificate of conformity would violate the prohibitions in § 1068.101 of this chapter.

(3) Vehicles exempted under this section are subject to all the requirements affecting engines and vehicles under 40 CFR part 86 or part 1048, as applicable. The requirements and restrictions of 40 CFR part 86 or 1048 apply to anyone manufacturing these engines, anyone manufacturing vehicles that use these engines, and all other persons in the same manner as if these engines were used in a motor vehicle or other nonrecreational application.

(c)(1) Make sure the original emission control information label is intact after assembly in the vehicle.

(2) Add a permanent supplemental label to the vehicle in a position where it will be clearly visible. In this emission control information label, do the following:

(i) Include the heading: ''Recreational Vehicle Emission Control Information''.

(ii) Include your full corporate name and trademark.

(iii) State: ''THIS ENGINE WAS ADAPTED FOR RECREATIONAL USE WITHOUT AFFECTING ITS EMISSION CONTROLS.''.

(iv) State the date you finished installation (month and year).

(3) Send the Designated Officer a signed letter by the end of each calendar year (or less often if we tell you) with all the following information:

(i) Identify your full corporate name, address, and telephone number.

(ii) List the models you expect to produce under this exemption in the coming year.

(iii) State: ''We produce each listed model for recreational application without making any changes that

could increase its certified emission levels, as described in 40 CFR 1051.605.''.

(d) If you build recreational vehicles under this section, we may require (as a condition of the exemption) that you comply with the emission-related warranty and recall responsibilities of this part.

(e) If you build a recreational vehicle using a motor vehicle engine that was certified as part of a vehicle-based engine family, we may require you to certify under this part instead of granting you an exemption under this part. If we do this, we may allow you to submit an abbreviated application for certification to show that you comply with the requirements of this part. You may reference the information in the original motor vehicle application.

§ 1051.615 What are the special provisions for certifying small recreational engines?

(a) You may certify ATVs with engines that have total displacement of less than 100 cc to the following emission exhaust standards instead of certifying them to the exhaust emission standards of subpart B of this part:

(1) 25.0 g/kW-hr $HC+NO_X$, with an FEL cap of 40.0 g/kW-hr $HC+NO_X$.

(2) 500 g/kW-hr CO.

(b) You may certify off-highway motorcycles with engines that have total displacement of 70 cc or less to the following emission exhaust standards instead of certifying them to the exhaust emission standards of subpart B of this part:

(1) 16.1 g/kW-hr $HC+NO_X$, with an FEL cap of 32.2 g/kW-hr $HC+NO_X$.

(2) 519 g/kW-hr CO.

(c) You may use the averaging, banking, and trading provisions of subpart H of this part to show compliance with this $HC+NO_X$ standards (an engine family meets emission standards even if its family emission limit is higher than the standard, as long as you show that the whole averaging set of applicable engine families meet the applicable emission standards using emission credits, and the vehicles within the family meet the family emission limit). You may not use averaging to meet the CO standards of this section.

(d) Measure emissions by testing the engine on a dynamometer with the steady-state duty cycle described in Table 1 of this section.

(1) During idle mode, hold the speed within your specifications, keep the throttle fully closed, and keep engine torque under 5 percent of the peak torque value at maximum test speed.

(2) For the full-load operating mode, operate the engine at wide-open throttle.

(3) See part 1065 of this chapter for detailed specifications of tolerances and calculations.

(4) Table 1 follows:

TABLE 1 OF § 1051.615—6-MODE DUTY CYCLE FOR RECREATIONAL ENGINES

	Engine speed (percent of maximum test speed)	Torque (percent of maximum test torque at test speed)	Minimum time in mode (minutes)	Weighting factors
Mode number:				
1	85	100	5.0	0.09
2	85	75	5.0	0.20
3	85	50	5.0	0.29
4	85	25	5.0	0.30
5	85	10	5.0	0.07
6	Idle	0	5.0	0.05

(e) All other requirements and prohibitions of this part apply to these engines and vehicles.

§ 1051.620 When may a manufacturer obtain an exemption for competition recreational vehicles?

(a) We may grant you an exemption from the standards and requirements of this part for a new recreational vehicle on the grounds that it is to be used solely for competition. The provisions of this part other than those in this section do not apply to recreational vehicles that we exempt for use solely for competition.

(b) We will exempt vehicles that we determine will be used solely for competition. The basis of our determinations are described in paragraphs (b)(1), (b)(2), and (c) of this section. Exemptions granted under this section are good for only one model year and you must request renewal for each subsequent model year. We will not approve your renewal request if we determine the vehicles will not be used solely for competition.

(1) *Off-highway motorcycles.* Motorcycles that are marketed and labeled as only for competitive use and that meet at least four of the criteria listed in paragraphs (b)(1)(i) through (vi) of this section are considered to be used solely for competition, except in cases where other information is available that indicates that they are not used solely for competition. The following features are indicative of motorcycles used solely for competition:

(i) The absence of a headlight or other lights.

(ii) The absence of a spark arrestor.

(iii) The absence of manufacturer warranty.

(iv) Suspension travel greater than 10 inches.

(v) Engine displacement greater than 50 cc.

(vi) The absence of a functional seat. (For example, a seat less with than 30 square inches of seating surface would generally not be considered a functional seat).

(2) *Snowmobiles and ATVs.* Snowmobiles and ATVs meeting all of the following criteria are considered to be used solely for competition, except in cases where other information is available that indicates that they are not used solely for competition:

(i) The vehicle or engine may not be displayed for sale in any public dealership.

(ii) Sale of the vehicle must be limited to professional racers or other qualified racers.

(iii) The vehicle must have performance characteristics that are substantially superior to noncompetitive models.

(c) Vehicles not meeting the applicable criteria listed in paragraph (b) of this section will be exempted only in cases where the manufacturer has clear and convincing evidence that the vehicles will be used solely for competition.

(d) You must permanently label vehicles exempted under this section to clearly indicate that they are to be used only for competition. Failure to properly label a vehicle will void the exemption for that vehicle.

(e) If we request it, you must provide us any information we need to determine whether the vehicles are used solely for competition.

§ 1051.625 What special provisions apply to unique snowmobile designs for small-volume manufacturers?

(a) If you are a small-volume manufacturer, we may permit you to produce up to 600 snowmobiles per year that are certified to less stringent emission standards than those in § 1051.103, as long as you meet all the conditions and requirements in this section.

(b) To apply for alternate standards under this section, send the Designated Officer a written request. In your request, do two things:

(1) Show that the snowmobile has unique design, calibration, or operating characteristics that make it atypical and infeasible or highly impractical to meet the emission standards in § 1051.103, considering technology, cost, and other factors.

(2) Identify the level of compliance you can achieve, including a description of available emission-control technologies and any constraints that may prevent more effective use of these technologies.

(c) You must give us other relevant information if we ask for it.

(d) An authorized representative of your company must sign the request and include the statement: ''All the information in this request is true and accurate, to the best of my knowledge.''.

(e) Send your request for this extension at least nine months before the relevant deadline. If different deadlines apply to companies that are not small-volume manufacturers, do not send your request before the regulations in question apply to the other manufacturers.

(f) If we approve your request, we will set alternate standards for your qualifying snowmobiles. These standards will not be above 400 g/kW-hr for CO or 150 g/kW-hr for HC.

(g) You may produce these snowmobiles to meet the alternate standards we establish under this section as long as you continue to produce them at the same or lower emission levels.

(h) You may not include snowmobiles you produce under this section in any averaging, banking, or trading calculations under Subpart H of this part.

(i) You must meet all the requirements of this part, except as noted in this section.

§ 1051.630 What special provisions apply to unique snowmobile designs for all manufacturers?

(a) We may permit you to produce up to 600 snowmobiles per year that are certified to the FELs listed in this section without new test data, as long as you meet all the conditions and requirements in this section.

(b) You may certify these snowmobiles with FELs of 560 g/kW-hr for CO and 270 g/kW-hr for HC (using the normal certification procedures).

(c) The emission levels described in this section are intended to represent worst-case emission levels. You may not certify snowmobiles under this section if good engineering judgment indicates that they have emission rates higher than these levels.

(d) Include snowmobiles you produce under this section in your averaging calculations under Subpart H of this part.

(e) You must meet all the requirements of this part, unless the regulations of this part specify otherwise.

§ 1051.635 What provisions apply to new manufacturers that are small businesses?

(a) If you are a small business (as defined by the Small Business Administration) that manufactures recreational vehicles, but does not otherwise qualify for the small-volume manufacturer provisions of this part, you may ask us to designate you to be a small-volume manufacturer. You may do this whether you began manufacturing recreational vehicles before, during, or after 2002.

(b) We may set other reasonable conditions that are consistent with the intent of this section and the Act. For example, we may place sales limits on companies that we designate to be small-volume manufacturers under this section.

Subpart H—Averaging, Banking, and Trading for Certification

§ 1051.701 General provisions.

(a) You may average, bank, and trade emission credits for purposes of certification as described in this subpart to show compliance with the standards of this part. To do this you must show that your average emission levels are below the applicable standards in subpart B of this part, or that you have sufficient credits to offset a credit deficit for the model year (as calculated in § 1051.720). If you cannot show in your end-of-year report that your average emission levels are below the applicable standards in subpart B of this part, or that you have sufficient credits to offset a credit deficit for the model year, we may void the certificates for all families certified to FELs above the allowable average. (b) The following averaging set restrictions apply:

(1) You may not average together engine families that are certified to different standards. You may, however, use banked credits that were generated relative to different standards, except as prohibited by paragraphs (b)(2) and (3) of this section, paragraph (e) of this section, or by other provisions in this part. For example, you may not average together within a model year off-highway motorcycles that are certified to the standards in § 1051.105(a)(1) and

§ 1051.105(a)(2); but you may use banked credits generated by off-highway motorcycles that are certified to the standards in § 1051.105(a)(1) to show compliance with the standards in § 1051.105(a)(2) in a later model year, and vice versa.

(2) There are separate averaging, banking, and trading programs for snowmobiles, ATVs, and off-highway motorcycles. You may not average or exchange banked or traded credits from engine families of one type of vehicle with those from engine families of another type of vehicle.

(3) You may not average or exchange banked or traded credits with other engine families if you use fundamentally different measurement procedures for the different engine families (for example, ATVs certified to chassis-based vs. engine-based standards). This paragraph (b)(3) does not restrict you from averaging together engine families that use test procedures that we determine provide equivalent emission results.

(4) You may not average or exchange banked or traded exhaust credits with evaporative credits, or vice versa.

(c) The definitions of Subpart I of this part apply to this subpart. The following definitions also apply:

(1) *Average standard* means a standard that allows you comply by averaging all your vehicles under this part. See subpart B of this part to determine which standards are average standards.

(2) *Broker* means any entity that facilitates a trade between a buyer and seller.

(3) *Buyer* means the entity that receives credits as a result of trade.

(4) *Family emission limit (FEL)* has the meaning given in it in § 1051.801.

(5) *Reserved credits* means credits you have generated that we have not yet verified in reviewing the end-of-year report.

(6) *Seller* means the entity that provides credits during a trade.

(d) Do not include any exported vehicles in the certification averaging, banking, and trading program. Include only vehicles certified under this part.

§ 1051.705 How do I average emission levels?

(a) As specified in subpart B of this part, certify each vehicle to a family emission limit (FEL).

(b) Calculate a preliminary average emission level according to § 1051.720 using projected U.S.-directed production volumes for your application for certification.

(c) After the end of your model year, calculate a final average emission level according to § 1051.720 for each type of recreational vehicle or engine you manufacture or import. Use actual U.S.-directed production volumes.

(d) If your preliminary average emission level is below the allowable average standard, see § 1051.710 for information about generating and banking emission credits. These credits will be considered reserved until we verify them in reviewing the end-of-year report.

§ 1051.710 How do I generate and bank emission credits?

(a) If your average emission level is below the average standard, you may calculate credits according to § 1051.720.

(b) You may generate credits if you are a certifying manufacturer.

(c) You may bank unused emission credits, but only after the end of the calendar year and after we have reviewed your end-of-year reports. Credits you generate do not expire.

(d) During the calendar year and before you send in your end-of-year report, you may consider reserved any credits you originally designate for banking during certification. You may redesignate these credits for trading in your end-of-year report, but they are not valid to demonstrate compliance until verified.

(e) You may use for averaging or trading any credits you declared for banking from the previous calendar year that we have not reviewed. But, we may revoke these credits later—following our review of your end-of-year report or audit actions. For example, this could occur if we find that credits are based on erroneous calculations; or that emission levels are misrepresented, unsubstantiated, or derived incorrectly in the certification process.

§ 1051.715 How do I trade emission credits?

(a) You may trade only banked emission credits, not reserved credits.

(b) You may trade banked credits to any certifying manufacturer.

(c) If a negative credit balance results from a credit trade, both buyers and sellers are liable, except in cases involving fraud. We may void the certificates of all emission families participating in a negative trade.

(1) If you buy credits but have not caused the negative credit balance, you must only supply more credits equivalent to the amount of invalid credits you used.

(2) If you caused the credit shortfall, you may be subject to the requirement sof § 1051.730(b)(6).

§ 1051.720 How do I calculate my average emission level or emission credits?

(a) Calculate your average emission level for each type of recreational vehicle or engine for each model year according to the following equation and round it to the nearest tenth of a g/km or g/kW-hr. Use consistent units throughout the calculation.

(1) For exhaust emissions:

(i) Calculate the average emission level as:

$$\text{Emission level} = \left[\sum_i (\text{FEL})_i \times (\text{UL})_i \times (\text{Production})_i\right] \Big/ \left[\sum_i (\text{Production})_i \times (\text{UL})_i\right]$$

Where:

FEL_i = The FEL to which the engine family is certified.

UL_i = The useful life of the engine family.

$Production_i$ = The number of vehicles in the engine family.

(ii) Use U.S.-directed production projections for initial certification, and actual U.S.-directed production volumes to determine compliance at the end of the model year.

(2) For vehicles that have standards expressed as g/kW-hr and a useful life in km, convert the useful life to kW-hr based on the maximum power output observed over the emission test and an assumed vehicle speed of 30 km/hr as follows: UL (kW-hr) = UL (km) × Maximum Test Power (kW)÷30 km/hr. (Note: It is not necessary to include a load factor, since credit exchange is not allowed between vehicles certified to g/kW-hr standards and vehicles certified to g/km standards.)

(3) For evaporative permeation standards expressed as $g/m^2/day$, use the useful life value in years multiplied by 365.24, and calculate the average emission level as:

$$\text{Emission level} = \left[\sum_i (\text{FEL})_i \times (\text{UL})_i \times (\text{Production})_i\right] \Big/ \left[\sum_i (\text{Production})_i \times (\text{UL})_i\right]$$

Where:

$Production_i$ = The number of vehicles in the engine family times the average internal surface area of the vehicles' fuel tanks.

(b) If your average emission level is below the average standard, calculate credits available for banking according to the following equation and round them to the nearest tenth of a gram:

$$\text{Credit} = \left[(\text{Average standard} - \text{Emission level})\right] \times \left[\sum_i (\text{Production})_i \times (\text{UL})_i\right]$$

(c) If your average emission level is above the average standard, calculate your preliminary credit deficit according to the following equation, rounding to the nearest tenth of a gram:

$$\text{Deficit} = \left[(\text{Emission level} - \text{Average standard})\right] \times \left[\sum_i (\text{Production})_i \times (\text{UL})_i\right]$$

§ 1051.725 What information must I keep?

(a) Maintain and keep five types of properly organized and indexed records for each engine family:

(1) Model year and EPA engine family.

(2) FEL.

(3) Useful life.

(4) Projected U.S.-directed production volume for the model year.

(5) Actual U.S.-directed production volume for the model year.

(b) Keep paper records of this information for three years from the due date for the end-of-year report. You may use any additional storage formats or media if you like.

(c) Keep a copy of all of the information you send us under § 1051.730.

(d) We may ask you to keep or send other information necessary to implement this subpart.

§ 1051.730 What information must I report?

(a) Include the following information in each of your applications for certification:

(1) A statement that, to the best of your belief, you will not have a negative credit balance for any type of recreational vehicle or engine when all credits are calculated. This means that if you believe that your average emission level will be above the standard (i.e., that you will have a deficit for the model year), you must have banked credits (or project to have received traded credits) to offset the deficit.

(2) Detailed calculations of projected emission credits (zero, positive, or negative) based on U.S.-directed production projections. If you project a credit deficit, state the source of credits needed to offset the credit deficit.

(b) At the end of each model year, send an end-of-year report.

(1) Your report must include three things:

(i) Calculate in detail your average emission level and any emission credits (positive, or negative) based on actual U.S.-directed production volumes.

(ii) If your average emission level is above the allowable average standard, demonstrate that you have the credits needed to offset the credit deficit. If you cannot demonstrate that you have the credits at the time you submit your end-of-year report, we may void the certificates for all families certified to FELs above the allowable average.

(iii) If your average emission level is below the allowable average standard, state whether you will reserve the credits for banking.

(2) Base your U.S.-directed production volumes on the point of first retail sale. You may consider distributors to be the point of first retail sale if all their engines are sold to ultimate buyers in the United States.

(3) Send end-of-year reports to the Designated Officer within 120 days of the end of the model year. If you send reports later, you are violating the Act.

(4) If you generate credits for banking and you do not send your end-of-year reports within 120 days after the

end of the model year, you may not use or trade the credits until we receive and review your reports. You may not use projected credits pending our review.

(5) You may correct errors discovered in your end-of-year report, including errors in calculating credits according to the following table:

If—	And if—	Then we—
(i) Our review discovers an error in your end-of-year report that increases your credit balance.	the discovery occurs within 180 days of receipt.	restore the credits for your use.
(ii) You discover an error in your report that increases your credit balance.	the discovery occurs within 180 days of receipt.	restore the credits for your use.
(iii) We or you discover and error in your report that increases your credit balance.	the discovery occurs more than 180 days after receipt.	do not restore the credits for your use.
(iv) We discover an error in your report that reduces your credit balance.	at any time after receipt	reduce your credit balance

(6) If our review of a your end-of year-report shows a negative balance, you may buy credits to bring your credit balance to zero. But you must buy 1.1 credits for each 1.0 credit needed. If enough credits are not available to bring your credit balance to zero within 90 days of when we notify you, we may void the certificates for all families certified to FELs above the allowable average.

(c) Within 90 days of any credit trade, you must send the Designated Officer a report of the trade that includes three types of information:

(1) The corporate names of the buyer, seller, and any brokers.

(2) Copies of contracts related to credit trading from the buyer, seller, and broker, as applicable.

(d) Include in each report a statement certifying the accuracy and authenticity of its contents.

(e) We may void a certificate of conformity for any emission family if you do not keep the records this section requires or give us the information when we ask for it.

§ 1051.735 Are there special averaging provisions for snowmobiles?

For snowmobiles, you may only use credits for the same phase or set of standards against which they were generated, except as allowed by this section.

(a) *Restrictions.* (1) You may not use any Phase 1 or Phase 2 credits for Phase 3 compliance.

(2) You may not use Phase 1 HC credits for Phase 2 HC compliance. However, because the Phase 1 and Phase 2 CO standards are the same, you may use Phase 1 CO credits for compliance with the Phase 2 CO standards.

(b) *Special credits for next phase of standards.* You may choose to generate credits early for banking for purposes of compliance with later phases of standards as follows:

(1) If your corporate average emission level at the end of the model year exceeds the applicable (current) phase of standards (without the use of traded or previously banked credits), you may choose to redesignate some of your snowmobile production to a calculation to generate credits for a future phase of standards. To generate credits the snowmobiles designated must have an FEL below the emission level of that set of standards. This can be done on a pollutant specific basis.

(2) Do not include the snowmobiles that you redesignate in the final compliance calculation of your average emission level for the otherwise applicable (current) phase of standards. Your average emission level for the remaining (non-redesignated) snowmobiles must comply with the otherwise applicable (current) phase of standards.

(3) Include the snowmobiles that you redesignate in a separate calculation of your average emission level for redesignated engines. Calculate credits using this average emission level relative to the specific pollutant in the

future phase of standards. These credits may be used for compliance with the future standards.

(4) For generating early Phase 3 credits, you may generate credits for $HC+NO_X$ or CO separately as described:

(i) To determine if you qualify to generate credits in accordance with paragraphs (b)(1) through (3) of this section, you must meet the credit trigger level. For $HC+NO_X$ this value is 62 g/kW-hr (which would be the $HC+NO_X$ standard that would result from inputting the highest allowable CO standard (275 g/kW-hr) into the Phase 3 equation). For CO the value is 200 g/kW-hr (which would be the CO standard that would result from inputting the highest allowable $HC+NO_X$ standard (90 g/kW-hr) into the Phase 3 equation).

(ii) $HC+NO_X$ and CO credits for Phase 3 are calculated relative to the 62 g/kW-hr and 200 g/kW-hr values, respectively.

(5) Credits can also be calculated for Phase 3 using both sets of standards. Without regard to the trigger level values, if your net emission reduction for the redesignated averaging set exceeds the requirements of Phase 3 in § 1051.103 (using both $HC+NO_X$ and CO in the Phase 3 equation in § 1051.103), then your credits are the difference between the Phase 3 reduction requirement of that section and your calculated value.

Subpart I—Definitions and Other Reference Information

§ 1051.801 What definitions apply to this part?

The following definitions apply to this part. The definitions apply to all subparts unless we note otherwise. All undefined terms have the meaning the Act gives to them. The definitions follow:

Act means the Clean Air Act, as amended, 42 U.S.C. 7401 et seq.

Adjustable parameter means any device, system, or element of design that someone can adjust (including those which are difficult to access) and that, if adjusted, may affect emissions or engine performance during emission testing or normal in-use operation. You may ask us to exclude a parameter that is difficult to access if it cannot be adjusted to affect emissions without significantly degrading performance, or if you otherwise show us that it will not be adjusted in use in a way that affect emissions

Aftertreatment means relating to any system, component, or technology mounted downstream of the exhaust valve or exhaust port whose design function is to reduce exhaust emissions.

All-terrain vehicle means a land-based or amphibious nonroad vehicle that meets the criteria listed in paragraph (1) of this definition; or, alternatively, the criteria of paragraph (2) of this definition but not the criteria of paragraph (3) of this definition.

(1) Vehicles designed to travel on four low pressure tires, having a seat designed to be straddled by the operator and handlebars for steering controls, and intended for use by a single operator and no other passengers are all-terrain vehicles.

(2) Other all-terrain vehicles have three or more wheels and one or more seats, are designed for operation over rough terrain, and are intended primarily for transportation. Golf carts generally do not meet these criteria since they are generally not designed for operation over rough terrain.

(3) Vehicles that meet the definition of ''offroad utility vehicle'' in this section are not all-terrain vehicles. However, § 1051.1(a) specifies that some offroad utility vehicles are required to meet the same requirements as all-terrain vehicles.

Auxiliary emission-control device means any element of design that senses temperature, engine rpm, motive speed, transmission gear, atmospheric pressure, manifold pressure or vacuum, or any other parameter to activate, modulate, delay, or deactivate the operation of any part of the emission-control system. This also includes any other feature that causes in-use emissions to be higher than those measured under test conditions, except as we allow under this part. For example, an accelerator pump would be considered an auxiliary emission-control device.

Brake power means the usable power output of the engine not including power required to operate fuel pumps, oil pumps, or coolant pumps.

Broker means any entity that facilitates a trade of emission credits between a buyer and seller.

Calibration means the set of specifications and tolerances specific to a particular design, version, or application of a component or assembly capable of functionally describing its operation over its working range.

Certification means obtaining a certificate of conformity for an engine family that complies with the emission standards and requirements in this part.

Compression-ignition means relating to a type of reciprocating, internal-combustion engine that is not a spark-ignition engine.

Crankcase emissions means airborne substances emitted to the atmosphere from any part of the engine crankcase's ventilation or lubrication systems. The crankcase is the housing for the crankshaft and other related internal parts.

Designated Officer means the Manager, Engine Programs Group (6405–J), U.S. Environmental Protection Agency, 1200 Pennsylvania Ave., Washington, DC 20460.

Emission-control system means any device, system, or element of design that controls or reduces the regulated emissions from a vehicle.

Emission-data vehicle means a vehicle or engine that is tested for certification.

Emission-related maintenance means maintenance that substantially affects emissions or is likely to substantially affect emissions deterioration.

Engine family means a group of vehicles with similar emission characteristics, as specified in § 1051.230.

Evaporative means relating to fuel emissions that result from permeation of fuel through the fuel system materials and from ventilation of the fuel system.

Family emission limit (FEL) means an emission level declared by the manufacturer to serve in place of an emission standard for certification under the emission-credit program in subpart H of this part. The family emission limit must be expressed to the same number of decimal places as the emission standard it replaces.

Fuel system means all components involved in transporting, metering, and mixing the fuel from the fuel tank to the combustion chamber(s), including the fuel tank, fuel tank cap, fuel pump, fuel filters, fuel lines, carburetor or fuel-injection components, and all fuel-system vents.

Good engineering judgment has the meaning we give it in § 1068.5 of this chapter.

Hydrocarbon (HC) means the hydrocarbon group on which the emission standards are based for each fuel type. For gasoline- and LPG-fueled engines, HC means total hydrocarbon (THC). For natural gas-fueled engines, HC means nonmethane hydrocarbon (NMHC). For alcohol-fueled engines, HC means total hydrocarbon equivalent (THCE).

Identification number means a unique specification (for example, model number/serial number combination) that allows someone to distinguish a particular vehicle or engine from other similar vehicle or engines.

Manufacturer has the meaning given in section 216(1) of the Act. In general, this term includes any person who manufactures a vehicle or engine for sale in the United States or otherwise introduces a new vehicle or engine into commerce in the United States. This includes importers that import for resale.

Maximum brake power means the maximum brake power of an engine at test conditions.

Maximum test power means the maximum brake power of an engine at maximum test speed.

Maximum test speed has the meaning we give in § 1065.515 of this chapter

Maximum test torque means the torque output observed at wide-open throttle at a given speed.

Model year means one of the following things:

(1) For freshly manufactured vehicles or engines (see definition of ''new,'' paragraph (1)), model year means one of the following:

(i) Calendar year.

(ii) Your annual new model production period if it is different than the calendar year. This must include January 1 of the calendar year for which the model year is named. It may not begin

before January 2 of the previous calendar year and it must end by December 31 of the named calendar year.

(2) For a vehicle or engine that is converted to a nonroad vehicle or engine after being placed into service in a motor vehicle, model year means the calendar year in which the vehicle or engine was originally produced (see definition of ''new,'' paragraph (2)).

(3) For a nonroad vehicle excluded under § 1051.5 that is later converted to operate in an application that is not excluded, model year means the calendar year in which the vehicle was originally produced (see definition of ''new,'' paragraph (3)).

(4) For engines that are not freshly manufactured but are installed in new nonroad vehicles, model year means the calendar year in which the engine is installed in the new nonroad vehicle. This installation date is based on the time that final assembly of the vehicle is complete (see definition of ''new,'' paragraph (4)).

(5) For a vehicle or engine modified by an importer (not the original manufacturer) who has a certificate of conformity for the imported vehicle or engine (see definition of ''new,'' paragraph (5)), model year means one of the following:

(i) The calendar year in which the importer finishes modifying and labeling the vehicle or engine.

(ii) Your annual production period for producing vehicles or engines if it is different than the calendar year; follow the guidelines in paragraph (1)(ii) of this definition.

(6) For a vehicle or engine you import that does not meet the criteria in paragraphs (1) through (5) of the definition of ''new'' model year means the calendar year in which the manufacturer completed the original assembly of the vehicle or engine. In general, this applies to used equipment that you import without conversion or major modification.

Motor vehicle has the meaning we give in § 85.1703(a) of this chapter. In general, motor vehicle means a self-propelled vehicle that can transport one or more people or any material, but does not include any of the following:

(1) Vehicles having a maximum ground speed over level, paved surfaces no higher than 40 km per hour (25 miles per hour).

(2) Vehicles that lack features usually needed for safe, practical use on streets or highways-for example, safety features required by law, a reverse gear (except for motorcycles), or a differential.

(3) Vehicles whose operation on streets or highways would be unsafe, impractical, or highly unlikely. Examples are vehicles with tracks instead of wheels, very large size, or features associated with military vehicles, such as armor or weaponry.

New means relating to any of the following vehicles or engines:

(1) A freshly manufactured engine or vehicle for which the ultimate buyer has never received the equitable or legal title. This kind of vehicle might commonly be thought of as ''brand new.'' In the case of this paragraph (1), the vehicle or engine is no longer new when the ultimate buyer receives this title or the product is placed into service, whichever comes first.

(2) An engine originally manufactured as a motor vehicle engine that is later intended to be used in a piece of nonroad equipment. In this case, the engine ceases being a motor vehicle engine and becomes a ''new nonroad engine''. The engine is no longer new when it is placed into nonroad service.

(3) A nonroad engine that has been previously placed into service in an application we exclude under § 1051.5 or exempt under 1051.620, where that engine is installed in a piece of equipment for which these exclusions or exemptions do not apply. The engine is no longer new when it is placed into nonroad service. For example, this would apply to a competition vehicle that is no longer used solely for competition.

(4) An engine not covered by paragraphs (1) through (3) of this definition that is intended to be installed in new nonroad equipment. The engine is no longer new when the ultimate buyer receives a title for the equipment or the product is placed into service, whichever comes first. This generally includes installation of used engines in new vehicles.

(5) An imported nonroad vehicle or engine covered by a certificate of conformity issued under this part, where someone other than the original manufacturer modifies the vehicle or engine after its initial assembly and holds the certificate. The vehicle or engine is no longer new when it is placed into nonroad service.

(6) An imported nonroad vehicle or engine that is not covered by a certificate of conformity issued under this part at the time of importation. This addresses uncertified engines and vehicles that have been placed into service in other countries and that someone seeks to import into the United States. Importation of this kind of new nonroad engine or vehicle is generally prohibited by part 1068 of this chapter.

Noncompliant vehicle or engine means a vehicle or engine that was originally covered by a certificate of conformity, but is not in the certified configuration or otherwise does not comply with the conditions of the certificate.

Nonconforming vehicle or engine means a vehicle or engine not covered by a certificate of conformity that would otherwise be subject to emission standards.

Nonmethane hydrocarbon means the difference between the emitted mass of total hydrocarbons and the emitted mass of methane.

Nonroad means relating to nonroad engines, or to vehicles or equipment that include nonroad engines.

Nonroad engine has the meaning given in § 1068.30 of this chapter. In general this means all internal-combustion engines except motor vehicle engines, stationary engines, or engines used solely for competition. This part only applies to nonroad engines that are used in snowmobiles, off-highway motorcycles, and ATVs (see § 1051.5).

Off-highway motorcycle means a two-wheeled vehicle with a nonroad engine and a seat (excluding marine vessels and aircraft). (Note: highway motorcycles are regulated under 40 CFR part 86.)

Offroad utility vehicle means a nonroad vehicle that has four or more wheels, seating for two or more persons, is designed for operation over rough terrain, and has either a rear payload 350 pounds or more or seating for six or more passengers. Vehicles intended primarily for recreational purposes that are not capable of transporting six passengers (such as dune buggies) are not offroad utility vehicles. (Note: § 1051.1(a) specifies that some offroad utility vehicles are required to meet the requirements that apply for all-terrain vehicles.)

Oxides of nitrogen has the meaning given it in 40 CFR part 1065.

Phase 1 means relating to Phase 1 standards of §§ 1051.103, 1051.105, or 1051.107, or other Phase 1 standards specified in subpart B of this part.

Phase 2 means relating to Phase 2 standards of § 1051.103, or other Phase 2 standards specified in subpart B of this part.

Phase 3 means relating to Phase 3 standards of § 1051.103, or other Phase 3 standards specified in subpart B of this part.

Physically adjustable range means the entire range over which an engine parameter can be adjusted, except as modified by § 1051.115(c). For parts described in § 1051.115(d), ''physically adjustable range'' means the adjustable range defined in that paragraph.

Placed into service means used for its intended purpose.

Point of first retail sale means the location at which the retail sale occurs. This generally means a dealership.

Recreational means, for purposes of this part, relating to snowmobiles, all-terrain vehicles, off-highway motorcycles, and other vehicles that we regulate under this part. Note that 40 CFR part 90 applies to other recreational vehicles.

Revoke means to discontinue the certificate for an engine family. If we revoke a certificate, you must apply for a new certificate before continuing to produce the affected vehicles or engines. This does not apply to vehicles or engines you no longer possess.

Round means to round numbers according to ASTM E29–02 (incorporated by reference in § 1051.810), unless otherwise specified.

Scheduled maintenance means adjusting, repairing, removing, disassembling, cleaning, or replacing components or systems that is periodically needed to keep a part from failing or

malfunctioning. It also may mean actions you expect are necessary to correct an overt indication of failure or malfunction for which periodic maintenance is not appropriate.

Small-volume manufacturer means:

(1) For motorcycles and ATVs, a manufacturer that sold motorcycles or ATVs before 2003 and had annual U.S.-directed production of no more than 5,000 off-road motorcycles and ATVs (combined number) in 2002 and all earlier calendar years. For manufacturers owned by a parent company, the limit applies to the production of the parent company and all of its subsidiaries.

(2) For snowmobiles, a manufacturer that sold snowmobiles before 2003 and had annual U.S.-directed production of no more than 300 snowmobiles in 2002 and all earlier model years. For manufacturers owned by a parent company, the limit applies to the production of the parent company and all of its subsidiaries.

(3) A manufacturer that we designate to be a small-volume manufacturer under § 1051.635.

Snowmobile means a vehicle designed to operate outdoors only over snow-covered ground, with a maximum width of 1.5 meters or less.

Spark-ignition means relating to a gasoline-fueled engine, or any other engine with a spark plug (or other sparking device) and with operating characteristics significantly similar to the theoretical Otto combustion cycle. Spark-ignition engines usually use a throttle to regulate intake air flow to control power during normal operation.

Suspend means to temporarily discontinue the certificate for an engine family. If we suspend a certificate, you may not sell vehicles or engines from that engine family unless we reinstate the certificate or approve a new one.

Test sample means the collection of vehicles or engines selected from the population of an engine family for emission testing.

Test vehicle or engine means a vehicle or engine in a test sample.

Total hydrocarbon means the combined mass organic compounds measured by our total hydrocarbon test procedure, expressed as a hydrocarbon with a hydrogen-to-carbon mass ratio of 1.85:1.

Total hydrocarbon equivalent means the sum of the carbon mass contributions of non-oxygenated hydrocarbons, alcohols and aldehydes, or other organic compounds that are measured separately as contained in a gas sample, expressed as petroleum-fueled engine hydrocarbons. The hydrogen-to-carbon ratio of the equivalent hydrocarbon is 1.85:1.

Ultimate buyer means ultimate purchaser.

Ultimate purchaser means, with respect to any new vehicle or engine, the first person who in good faith purchases such vehicle or engine for purposes other than resale.

United States means the States, the District of Columbia, the Commonwealth of Puerto Rico, the Commonwealth of the Northern Mariana Islands, Guam, American Samoa, the U.S. Virgin Islands, and the Trust Territory of the Pacific Islands.

Upcoming model year means for an engine family the model year after the one currently in production.

U.S.-directed production means the number of vehicle units, subject to the requirements of this part, produced by a manufacturer (and/or imported) for which the manufacturer has a reasonable assurance that sale was or will be made to ultimate buyers in the United States.

Useful life means the period during which a vehicle is required to comply with all applicable emission standards, specified as a number of kilometers, hours, and/or calendar years. It must be at least as long as both of the following:

(1) The expected average service life before the vehicle is remanufactured or retired from service.

(2) The minimum useful life value.

Void means to invalidate a certificate or an exemption. If we void a certificate, all the vehicles produced under that engine family for that model year are considered noncompliant, and you are liable for each vehicle produced under the certificate and may face civil or criminal penalties or both. If we void an exemption, all the vehicles produced under that exemption are considered uncertified (or nonconforming), and you are liable for each vehicle produced under the exemption and may

face civil or criminal penalties or both. You may not produce any additional vehicles using the voided exemption.

Wide-open throttle means maximum throttle opening. Unless this is specified at a given speed, it refers to maximum throttle opening at maximum speed. For electronically controlled or other engines with multiple possible fueling rates, wide-open throttle also means the maximum fueling rate at maximum throttle opening under test conditions.

§ 1051.805 What symbols, acronyms, and abbreviations does this part use?

The following symbols, acronyms, and abbreviations apply to this part:

°—degrees.
ASTM—American Society for Testing and Materials.
ATV—all-terrain vehicle.
cc—cubic centimeters.
cm—centimeter.
C—Celsius.
CO—carbon monoxide.
CO_2—carbon dioxide.
EPA—Environmental Protection Agency.
F—Fahrenheit.
g—grams.
g/gal/day—grams per gallon per test day.
$g/m^2/day$—grams per meter-square per test day.
Hg—mercury.
hr—hours.
km—kilometer.
kW—kilowatt.
LPG—liquefied petroleum gas.
m—meters.
mm—millimeters.
mW—milliwatts.
NMHC—nonmethane hydrocarbons.
NO_X—oxides of nitrogen (NO and NO_X).
psig—pounds per square inches of gauge pressure.
rpm—revolutions per minute.
SAE—Society of Automotive Engineers.
SI—spark-ignition.
THC—total hydrocarbon.
THCE—total hydrocarbon equivalent.
U.S.C.—United States Code.

§ 1051.810 What materials does this part reference?

We have incorporated by reference the documents listed in this section. The Director of the FEDERAL REGISTER approved the incorporation by reference as prescribed in 5 U.S.C. 552(a) and 1 CFR part 51. Anyone may inspect copies at the U.S. EPA, Air and Radiation Docket and Information Center, 1301 Constitution Ave., NW., Room B102, EPA West Building, Washington, DC 20460 or the Office of the Federal Register, 800 N. Capitol St., NW., 7th Floor, Suite 700, Washington, DC.

(a) *ASTM material.* Table 1 of § 1051.810 lists material from the American Society for Testing and Materials that we have incorporated by reference. The first column lists the number and name of the material. The second column lists the sections of this part where we reference it. Anyone may purchase copies of these materials from the American Society for Testing and Materials, 100 Barr Harbor Dr., West Conshohocken, PA 19428. Table 1 follows:

TABLE 1 OF § 1051.810—ASTM MATERIALS

Document number and name	Part 1051 reference
ASTM D471–98, Standard Test Method for Rubber Property-Effect of Liquids.	1051.501
ASTM D814–95 (reapproved 2000), Standard Test Method for Rubber Property-Vapor Transmission of Volatile Liquids.	1051.245
ASTM E29–02, Standard Practice for Using Significant Digits in Test Data to Determine Conformance with Specifications.	1051.801

(b) *SAE material.* Table 2 of § 1051.810 lists material from the Society of Automotive Engineering that we have incorporated by reference. The first column lists the number and name of the material. The second column lists the sections of this part where we reference it. Anyone may purchase copies of these materials from the Society of Automotive Engineers, 400 Commonwealth Drive, Warrendale, PA 15096. Table 2 follows:

TABLE 2 OF § 1051.810—SAE MATERIALS

Document number and name	Part 1051 reference
SAE J30, Fuel and Oil Hoses, June 1998.	1051.245, 1051.501
SAE J1930, Electrical/Electronic Systems Diagnostic Terms, Definitions, Abbreviations, and Acronyms, May 1998.	1051.135
SAE J2260, Nonmetallic Fuel System Tubing with One or More Layers, November 1996.	1051.245

§ 1051.815 How should I request EPA to keep my information confidential?

(a) Clearly show what you consider confidential by marking, circling, bracketing, stamping, or some other method. We will store your confidential information as described in 40 CFR part 2. Also, we will disclose it only as specified in 40 CFR part 2.

(b) If you send us a second copy without the confidential information, we will assume it contains nothing confidential whenever we need to release information from it.

(c) If you send us information without claiming it is confidential, we may make it available to the public without further notice to you, as described in § 2.204 of this chapter.

§ 1051.820 How do I request a hearing?

See 40 CFR part 1068, subpart G, for information related to hearings.

PART 1065—TEST PROCEDURES AND EQUIPMENT

Subpart A—Applicability and General Provisions

Sec.
1065.1 Applicability.
1065.5 Overview of test procedures.
1065.10 Other test procedures.
1065.15 Engine testing.
1065.20 Limits for test conditions.

Subpart B—Equipment and Analyzers

1065.101 Overview.
1065.105 Dynamometer and engine equipment specifications.
1065.110 Exhaust gas sampling system; spark-ignition (SI) engines.
1065.115 Exhaust gas sampling system; compression-ignition engines. [Reserved]
1065.120 Raw sampling. [Reserved]
1065.125 Analyzers (overview/general response characteristics).
1065.130 Hydrocarbon analyzers.
1065.135 NO_X analyzers.
1065.140 CO and CO_2 analyzers.
1065.145 Smoke meters. [Reserved]
1065.150 Flow meters.
1065.155 Temperature and pressure sensors.

Subpart C—Test Fuels and Analytical Gases

1065.201 General requirements for test fuels.
1065.205 Test fuel specifications for distillate diesel fuel. [Reserved]
1065.210 Test fuel specifications for gasoline.
1065.215 Test fuel specifications for natural gas.
1065.220 Test fuel specifications for liquefied petroleum gas.
1065.240 Lubricating oils.
1065.250 Analytical gases.

Subpart D—Analyzer and Equipment Calibrations

1065.301 Overview.
1065.305 International calibration standards.
1065.310 CVS calibration. [Reserved]
1065.315 Torque calibration.

Subpart E—Engine Selection, Preparation, and Service Accumulation

1065.401 Selecting a test engine.
1065.405 Preparing and servicing a test engine.
1065.410 Service limits for stabilized test engines.
1065.415 Durability demonstration.

Subpart F—Running an Emission Test

1065.501 Overview of the engine dynamometer test procedures.
1065.510 Engine mapping procedures.
1065.515 Test cycle generation.
1065.520 Engine starting, restarting, and shutdown.
1065.525 Engine dynamometer test run.
1065.530 Test cycle validation criteria.

Subpart G—Data Analysis and Calculations

1065.601 Overview.
1065.605 Required records.
1065.610 Bag sample analysis.
1065.615 Bag sample calculations.

Subpart H—Particulate Measurements [Reserved]

Subpart I—Testing With Oxygenated Fuels

1065.801 Applicability.
1065.805 Sampling system.
1065.810 Calculations.

Subpart J—Field Testing

1065.901 Applicability.
1065.905 General provisions.
1065.910 Measurement accuracy and precision.
1065.915 Equipment specifications for SI engines.
1065.920 Equipment setup and test run for SI engines.
1065.925 Calculations.
1065.930 Specifications for mass air flow sensors.
1065.935 Specifications for THC analyzers.

1065.940 Specifications for NO_X and air/fuel sensors.
1065.945 Specifications for CO analyzers.
1065.950 Specifications for speed and torque measurement.

Subpart K—Definitions and Other Reference Information

1065.1001 Definitions.
1065.1005 Symbols, acronyms, and abbreviations.
1065.1010 Reference materials.
1065.1015 Confidential information.

AUTHORITY: 42 U.S.C. 7401–7671(q).

SOURCE: 67 FR 68347, Nov. 8, 2002, unless otherwise noted.

Subpart A—Applicability and General Provisions

§ 1065.1 Applicability.

(a) This part describes the procedures that apply to testing that we require for the following engines or for equipment using the following engines:

(1) Large nonroad spark-ignition engines we regulate under 40 CFR part 1048.

(2) Vehicles that we regulate under 40 CFR part 1051 (*i.e.*, recreational SI vehicles) that are regulated based on engine testing. See 40 CFR part 1051 to determine which vehicles may be certified based on engine test data.

(b) This part does not apply to any of the following engine or vehicle categories:

(1) Light-duty highway vehicles (see 40 CFR part 86).

(2) Heavy-duty highway Otto-cycle engines (see 40 CFR part 86).

(3) Heavy-duty highway diesel engines (see 40 CFR part 86).

(4) Aircraft engines (see 40 CFR part 87).

(5) Locomotive engines (see 40 CFR part 92).

(6) Land-based nonroad diesel engines (see 40 CFR part 89).

(7) General marine engines (see 40 CFR parts 89 and 94).

(8) Marine outboard and personal watercraft engines (see 40 CFR part 91).

(9) Small nonroad spark-ignition engines (see 40 CFR part 90).

(c) This part is addressed to you as a manufacturer, but it applies equally to anyone who does testing for you, and to us when we conduct testing to determine if you meet emission standards.

(d) Paragraph (a) of this section identifies the parts of the CFR that define emission standards and other requirements for particular types of engines. In this part 1065, we refer to each of these other parts generically as the ''standard-setting part.'' For example, 40 CFR part 1051 is always the standard-setting part for snowmobiles. Follow the standard-setting part if it differs from this part.

(e) For equipment subject to this part and regulated under equipment-based or vehicle-based standards, interpret the term ''engine'' in this part to include equipment and vehicles(see 40 CFR 1068.30).

§ 1065.5 Overview of test procedures.

(a) Some of the provisions of this part do not apply to all types of engines. For example, measurement of particulate matter is generally not required for spark-ignition engines. See the standard-setting part to determine which provisions in this part may not apply. Before using this part's procedures, read the standard-setting part to answer at least the following questions:

(1) How should I warm up the test engine before measuring emissions? Do I need to measure cold-start emissions during this warm-up segment of the duty cycle?

(2) Do I measure emissions while the warmed-up engine operates over a steady-state schedule, a transient schedule, or both?

(3) What are the speed and load points of the test cycle(s)?

(4) Which exhaust constituents do I need to measure?

(5) Does testing require full-flow dilute sampling? Is raw sampling acceptable? Is partial-flow dilute sampling acceptable?

(6) Do any unique specifications apply for test fuels?

(7) What maintenance steps may I do before or between tests on an emission-data engine?

(8) Do any unique requirements apply to stabilizing emission levels on a new engine?

(9) Do any unique requirements apply to testing conditions, such as ambient temperatures or pressures?

(10) Are there special emission standards that affect engine operation and ambient conditions?

(11) Are there different emission standards that apply to field testing under normal operation?

(b) The following table shows how this part divides testing specifications into subparts:

This subpart...	Describes these specifications or procedures...
Subpart A	General provisions for test procedures.
Subpart B	Equipment for testing.
Subpart C	Fuels and analytical gases for testing.
Subpart D	How to calibrate test equipment.
Subpart E	How to prepare engines for testing, including service accumulation.
Subpart F	How to test for emissions.
Subpart G	How to calculate emission levels from measured data.
Subpart H	[Reserved].
Subpart I	How to measure emissions from engines fueled with an oxygenated fuel such as methanol or ethanol.
Subpart J	How to do field testing of in-use vehicles and equipment.
Subpart K	Definitions, abbreviations, and other reference information that apply to emission testing.

§ 1065.10 Other test procedures.

(a) *Your testing.* These test procedures apply for all testing that you do to show compliance with emission standards, with a few exceptions listed in this section.

(b) *Our testing.* These test procedures generally apply for testing that we do to determine if your engines comply with applicable emission standards. We may conduct other testing as allowed by the Act.

(c) *Exceptions.* You may be allowed or required to use test procedures other than those specified in this part in the following cases:

(1) The test procedures in this part are intended to produce emission measurements equivalent to those that would result from measuring emissions during in-use operation using the same engine configuration installed in a piece of equipment. If good engineering judgment indicates that use of the procedures in this part for an engine would result in measurements that are not representative of in-use operation of that engine, you must notify us. If we determine that using these procedures would result in measurements that are significantly unrepresentative and that changing the procedures will result in more representative measurements and not decrease the stringency of emission standards, we will specify changes to the procedures. In your notification to us, you should recommend specific changes you think are necessary.

(2) You may ask to use emission data collected using other test procedures, such as those of the California Air Resources Board or the International Organization for Standardization. We will allow this only if you show us that these data are equivalent to data collected using our test procedures.

(3) You may ask to use alternate procedures that produce measurements equivalent to those from the specified procedures. If you send us a written request showing your procedures are equivalent, and we agree that they are equivalent, we will allow you to use them. You may not use an alternate procedure until we approve them, either by: telling you directly that you may use this procedure; or issuing guidance to all manufacturers, which allows you to use the alternate procedure without additional approval.

(4) You may ask to use special test procedures if your engine cannot be tested under the specified procedures (for example, your engine cannot operate on the specified transient cycle). In this case, tell us in writing why you cannot satisfactorily test your engines using this part's procedures and ask to use a different approach. We will approve your special test procedures if we determine they would produce emission measurements that are representative of those that would result from measuring emissions during in-use operation. You may not use special procedures until we approve them.

(5) The standard-setting part may contain other specifications for test procedures that apply for your engines.

In cases where it is not possible to comply with both the test procedures in those parts and the test procedures in this part, you must comply with the test procedures specified in the standard-setting part. Those other parts may also allow you to deviate from the test procedures of this part for other reasons.

§ 1065.15 Engine testing.

(a) This part describes the procedures for performing exhaust emission tests on engines that must meet emission standards.

(b) Generally, you must test an engine while operating it on a laboratory dynamometer over a prescribed sequence. (Subpart J of this part describes in-use testing of engines installed in vehicles or equipment.) You need to sample and analyze the exhaust gases generated during engine operation to determine the concentration of the regulated pollutants.

(c) Concentrations are converted into units of grams of pollutant per kilowatt-hour (g/kW-hr) or similar units for comparison to emission standards. If the applicable emission standards are expressed as g/bhp-hr, references in this part to kW should generally be interpreted to mean horsepower.

§ 1065.20 Limits for test conditions.

(a) Unless specified elsewhere in this chapter, you may conduct tests to determine compliance with duty-cycle emission standards at ambient temperatures of 20–30° C (68–86° F), ambient pressures of 600–775 mm Hg, and any ambient humidity level.

(b) Follow the standard-setting part for ambient conditions when testing to determine compliance with not-to-exceed or other off-cycle emission standards.

(c) For engine testing in a laboratory, you may heat, cool, and/or dehumidify the dilution air before it enters the CVS.

(d) For engine testing in a laboratory, if the barometric pressure observed while generating the maximum-torque curve changes by more than 25 mm Hg from the value measured when you started mapping, you must remap the engine. Also, to have a valid test, the average barometric pressure observed during the exhaust emission test must be within 25 mm Hg of the average observed during the maximum torque curve generation (see § 1065.510).

Subpart B—Equipment and Analyzers

§ 1065.101 Overview.

This subpart describes equipment and analyzers for measuring emissions. Subpart D of this part describes how to calibrate these devices and subpart C of this part defines the accuracy and purity specifications of analytical gases.

§ 1065.105 Dynamometer and engine equipment specifications.

(a) The engine dynamometer system must be able to control engine torque and speed simultaneously over the applicable test cycles within the accuracies specified in § 1065.530. If your dynamometer cannot meet the accuracy requirements in § 1065.530, you must get our approval before using it. For transient testing, issue command set points for engine torque and speed at 5 Hz or greater (10 Hz recommended). Record feedback engine torque and speed at least once every second during the test. In addition to these general requirements, make sure your engine or dynamometer's readout signals for speed and torque meet the following accuracies for all testing:

(1) Engine speed readout must be accurate to within ±2 percent of the absolute standard value. A 60-tooth (or greater) wheel in combination with a common mode rejection frequency counter is considered an absolute standard for engine or dynamometer speed.

(2) Engine flywheel torque readout must meet one of the two following standards for accuracy:

(i) Within ±3 percent of the NIST true value torque (as defined in § 1065.315).

(ii) The following accuracies:

If the full-scale torque value is...	Engine flywheel torque readout must be within...
T ≤ 550 ft-lbs.	±2.5 ft-lbs. of NIST true value.
550 < T ≤ 1050 ft-lbs.	±5.0 ft-lbs. of NIST true value.

If the full-scale torque value is...	Engine flywheel torque readout must be within...
T > 1050 ft-lbs.	±10.0 ft-lbs. of NIST true value.

(3) Option: You may use internal dynamometer signals (such as armature current) to measure torque if you can show that the engine flywheel torque during the test cycle conforms to paragraph (b)(2) of this section. Your measurements must compensate for increased or decreased flywheel torque because of the armature's inertia during accelerations and decelerations in the test cycle.

(b) To verify that the test engine has followed the test cycle correctly, collect the dynamometer or engine readout signals for speed and torque so you can statistically correlate the engine's actual performance with the test cycle (see § 1065.530). Normally, to do this, you would convert analog signals from the dynamometer or engine into digital values for computer storage, but all conversions must meet two criteria:

(1) Speed values used to evaluate cycles must be accurate to within 2 percent of the readout value for dynamometer or engine speed.

(2) Engine flywheel torque values used to evaluate cycles must be accurate to within 2 percent of the readout value for dynamometer or engine flywheel torque.

(c) You may combine the tolerances in paragraphs (a) and (b) of this section if you use the root mean square (RMS) method and refer accuracies of the RMS values to absolute-standard or NIST true values.

(1) Speed values used to evaluate cycles must be accurate to within ±2.8 percent of the absolute standard values, as defined in paragraph (a)(1) of this section.

(2) Engine flywheel torque values used to evaluate cycles must be accurate to within ±3.6 percent of NIST true values, as determined in § 1065.315.

§ 1065.110 Exhaust gas sampling system; spark-ignition (SI) engines.

(a) *General.* The exhaust gas sampling system described in this section is designed to measure the true mass of gaseous emissions in the exhaust of SI engines. (If the standard-setting part requires determination of THCE or NMHCE for your engine, then see subpart I of this part for additional requirements.) Under the constant-volume sampler (CVS) concept, you must measure the total volume of the mixture of exhaust and dilution air and collect a continuously proportioned volume of sample for analysis. You must control flow rates so that the ratio of sample flow to CVS flow remains constant. You then determine the mass emissions from the sample concentration and total flow over the test period.

(1) Do not let the CVS or dilution air inlet system artificially lower exhaust system backpressure. To verify proper backpressures, measure pressure in the raw exhaust immediately upstream of the inlet to the CVS. Continuously measure and compare the static pressure of the raw exhaust observed during a transient cycle—with and without the CVS operating. Static pressure measured with the CVS system operating must remain within ±5 inches of water (1.2 kPa) of the static pressure measured when disconnected from the CVS, at identical moments in the test cycle. (Note: We will use sampling systems that can maintain the static pressure to within ±1 inch of water (0.25 kPa) if your written request shows that this closer tolerance is necessary.) This requirement serves as a design specification for the CVS/dilution air inlet system, and should be performed as often as good engineering practice dictates (for example, after installing an uncharacterized CVS, adding an unknown inlet restriction on the dilution air, or otherwise altering the system).

(2) The system for measuring temperature (sensors and readout) must have an accuracy and precision of ±3.4° F (±1.9° C). The temperature measuring system for a CVS without a heat exchanger must respond within 1.50 seconds to 62.5 percent of a temperature change (as measured in hot silicone oil). For a CVS with a heat exchanger, there is no specific requirement for response time.

(3) The system for measuring pressure (sensors and readout) must have an accuracy and precision of ±3 mm Hg (0.4 kPa).

(4) The flow capacity of the CVS must be large enough to keep water from condensing in the system. You may dehumidify the dilution air before it enters the CVS. You also may heat or cool the air if three conditions exist:

(i) The air (or air plus exhaust gas) temperature does not exceed 250° F (121° C).

(ii) You calculate the CVS flow rate necessary to prevent water condensation based on the lowest temperature in the CVS before sampling. (We recommend insulating the CVS system when you use heated dilution air.)

(iii) The dilution ratio is high enough to prevent condensation in bag samples as they cool to room temperature.

(5) Bags for collecting dilution air and exhaust samples must be big enough for samples to flow freely.

(6) The general CVS sample system consists of a dilution air filter (optional) and mixing assembly, cyclone particulate separator (optional), a sample line for the bag sample or other sample lines a dilution tunnel, and associated valves and sensors for pressure and temperature. Except for the system to sample hydrocarbons from two-stroke engines, the temperature of the sample lines must be more than 3° C above the mixture's maximum dew point and less than 121° C. We recommend maintaining them at 113 ± 8° C. For the hydrocarbon sampling system with two-stroke engines, the temperature of the sample lines should be maintained at 191 ± 11° C. A general schematic of the SI sampling system is shown in Figure 1065.110–1, which follows:

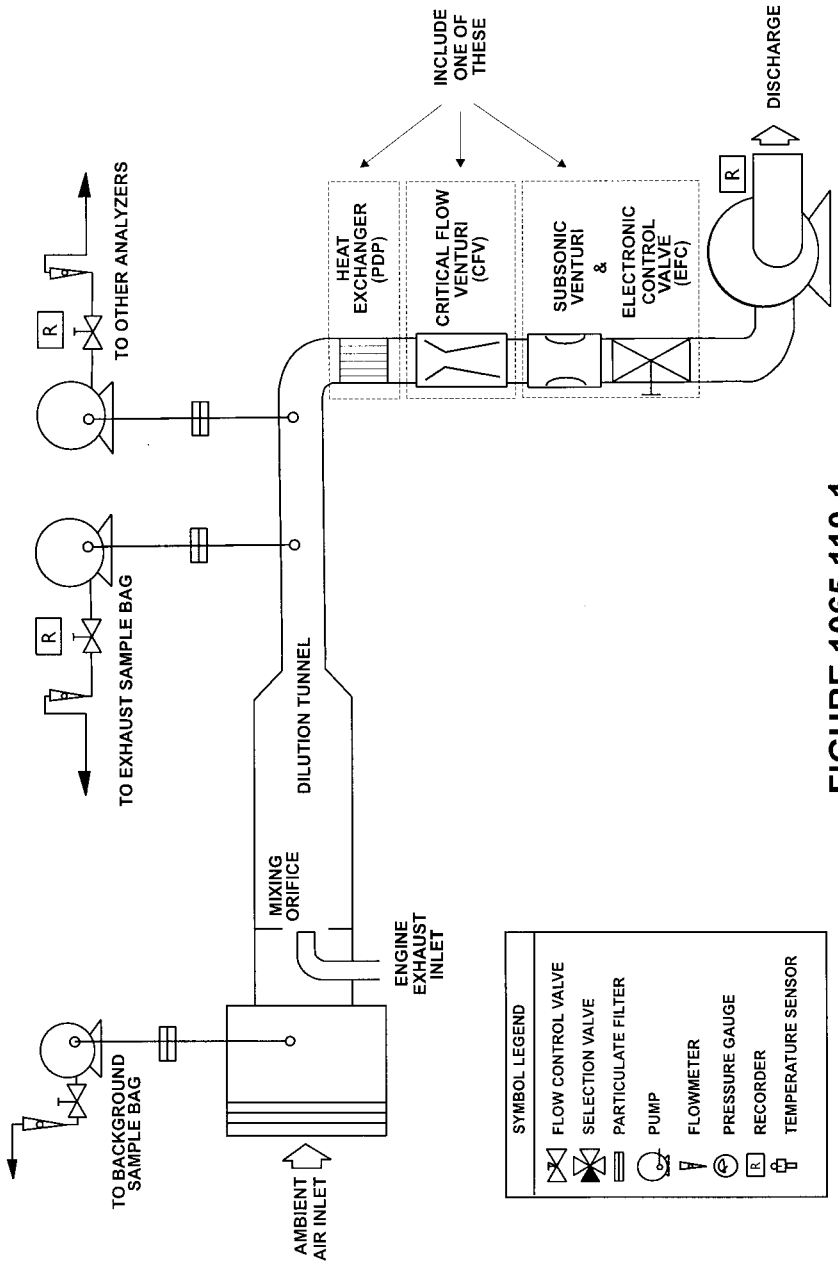

FIGURE 1065.110-1
GENERIC GASEOUS EMISSIONS SAMPLING SYSTEM

(b) *Steady-state testing.* Constant proportional sampling is required throughout transient testing, but is not required throughout steady-state testing.

Steady-state testing requires that you draw a proportional sample for each test mode, but you may sample in different proportions for different test modes, as long as you know the ratio of the sample flow to total flow during each test mode. This allowance means that you may use simpler flow control systems for steady-state testing than are shown in Figure 1065.110–1 of this section.

(c) *Configuration variations.* Since various configurations can produce equivalent results, you need not conform exactly to the drawings in this subpart. You may use other components—such as instruments, valves, solenoids, pumps and switches—to provide more information and coordinate the components' functions. Based on good engineering judgment, you may exclude other components that are not needed to maintain accuracy on some systems.

(d) *CFV–CVS component description.* The flow characteristics of a Critical-Flow Venturi, Constant-Volume Sampler (CFV–CVS) are governed by the principles of fluid dynamics associated with critical flow. The CFV system is commonly called a constant-volume system (CVS) even though the mass flow varies. More properly, they are constant-proportion sampling systems, because small CFVs in each of the sample lines maintains proportional sampling while temperatures vary. This CFV maintains the mixture's flow rate at choked flow, which is inversely proportional to the square root of the gas temperature, and the system computes the actual flow rate continuously. Because pressures and temperatures are the same at all venturi inlets, the sample volume is proportional to the total volume. The CFV–CVS sample system uses critical flow venturis for the bag sample or other sample lines (these are shown in the figure as flow control valves) and a critical flow venturi for the dilution tunnel. All venturis must be maintained at the same temperature.

(e) *EFC–CVS component description.* The electronic flow control-CVS (EFC–CVS) system for sampling is identical to the CFV system described in paragraph (b) of this section, except that it adds electronic flow controllers (instead of sampling venturis), a subsonic venturi and an electronic flow controller for the CVS (instead of the critical flow venturi), metering valves, and separate flow meters (optional) to totalize sample flow volumes. The EFC sample system must conform to the following requirements:

(1) The system must meet all the requirements in paragraph (b) of this section.

(2) The ratio of sample flow to CVS flow must not vary by more than ±5 percent from the test's setpoint.

(3) Sample flow totalizers must meet the accuracy specifications in § 1065.150. You may obtain total volumes from the flow controllers, with our advance approval, if you can show they meet these accuracies.

(f) *Component description, PDP–CVS.* The positive-displacement pump-CVS (PDP–CVS) system for sampling is identical to the CFV system described in paragraph (b) of this section, except for the following changes:

(1) Include a heat exchanger.

(2) Use positive-displacement pumps for the CVS flow and sampling-system flow. You do not need sampling venturis or a venturi for the dilution tunnel. All pumps must operate at a constant flow rate.

(3) All pumps must operate at a nominally constant temperature. Maintain the gas mixture's temperature—measured at a point just ahead of the positive-displacement pump (and after the heat exchanger for the main CVS pump)—within ±10° F (±5.6° C) of the average operating temperature observed during the test. (You may estimate the average operating temperature from the temperatures observed during similar tests.) The system for measuring temperature (sensors and readout) must have an accuracy and precision of ±3.4° F (1.9° C), and response time consistent with good engineering judgment.

(g) *Mixed systems.* You may combine elements of paragraphs (d), (e), and (f) consistent with good engineering judgment. For example, you may control the CVS flow rate using a CFV, and control sample flow rates using electronic flow controllers.

§ 1065.115 Exhaust gas sampling system; compression-ignition engines. [Reserved]

§ 1065.120 Raw sampling. [Reserved]

§ 1065.125 Analyzers (overview/general response characteristics).

(a) *General.* The following sections and subparts describe the specifications for analyzers and analytical equipment:

(1) The analyzers for measuring hydrocarbon, NO_X, CO, and CO_2 emission concentrations are specified in § 1065.130 through § 1065.140.

(2) The analytical equipment for measuring particulate emissions is specified in Subpart H of this part.

(3) The analytical equipment for measuring emissions of oxygenated compounds (for example, methanol) is specified in Subpart I of this part.

(4) The analytical equipment for measuring in-use emissions is specified in Subpart J of this part.

(b) *Response time.* Analyzers must have the following response characteristics:

(1) For steady-state testing and transient testing with bag sample analysis, the analyzer must reach at least 90 percent of its final response within 5.0 seconds after any step change to the input concentration at or above 80 percent of full scale.

(2) For transient testing with continuous measurement, the analyzer must reach at least 90 percent of its final response within 1.0 second after any step change to the input concentration at or above 80 percent of full scale.

(c) *Precision and noise.* Analyzers must meet the following characteristics for precision and noise:

(1) Precision must be no worse than ±1 percent of full-scale concentration for each range used above 155 ppm (or ppmC), or ±2 percent for each range used below 155 ppm (or ppmC). For this paragraph (c)(1), we define precision as 2.5 times the standard deviation of 10 repetitive responses to a given calibration or span gas.

(2) Peak-to-peak response to zero and calibration or span gases over any 10-second period must be no more than 2 percent of full-scale chart deflection on all ranges used.

(d) *Drift.* Analyzers must meet specifications for zero-response and span drift.

(1) The zero-response drift during one hour must be less than 2 percent of full-scale chart deflection on the lowest range used. Zero-response is the mean response, including noise, to a zero-gas during a 30-second interval.

(2) The span drift during one hour must be less than 2 percent of full-scale chart deflection on the lowest range used. Span is the difference between the span-response and the zero-response. Span-response is the mean response, including noise, to a span gas during a 30-second interval.

(e) *Calibration.* See subpart D of this part for specifications to calibrate analyzers.

§ 1065.130 Hydrocarbon analyzers.

This section describes the requirements for flame ionization detectors (FIDs) used to measure hydrocarbons.

(a) Fuel the FID with a mixture of hydrogen in helium and calibrate it using propane.

(b) If you use a heated FID (required only for diesels and two-stroke, spark-ignition engines), keep the temperature 191 ±11° C).

(c) Use an overflow sampling system for heated continuous FIDs. (In an overflow system excess zero gas or span gas spills out of the probe when you are doing zero or span checks.)

(d) Do not premix the FID fuel and burner air.

(e) Make sure the FID meets accuracy and precision specifications in ISO 8178–1 (incorporated by reference in § 1065.1010).

§ 1065.135 NO_X analyzers.

This section describes the requirements for chemiluminescent detectors (CLD) used to measure NO_X. Good engineering practice may require the use of other detectors.

(a) A CLD must meet the following requirements:

(1) Make sure your CLD meets the accuracy and precision specifications in ISO 8178–1 (incorporated by reference in § 1065.1010).

(2) The NO to NO_2 converter must have an efficiency of at least 90 percent.

(3) Use an overflow sampling system for continuous CLDs. (In an overflow system excess zero gas or span gas spills out of the probe when you are doing zero or span checks.)

(4) You do not need a heated CLD to test spark-ignition engines.

(b) Using CLDs is generally acceptable even though they measure only NO and NO_2, since conventional engines do not emit significant amounts of other NO_X species.

§ 1065.140 CO and CO_2 analyzers.

This section describes the requirements for non-dispersive infrared absorption detectors (NDIR) to measure CO and CO_2.

(a) The NDIR must meet the applicable accuracy and precision specifications of ISO 8178–1 (incorporated by reference in § 1065.1010).

(b) The NDIR must meet the applicable quench and interference requirements of ISO 8178–1 (incorporated by reference in § 1065.1010).

§ 1065.145 Smoke meters. [Reserved]

§ 1065.150 Flow meters.

(a) Flow meters must have accuracy and precision of ±2 percent of point or better and be traceable to NIST standards.

(b) You may correct flow measurements for temperature or pressure, if your temperature and pressure measurements have accuracy and precision of ±2 percent of point or better (absolute).

§ 1065.155 Temperature and pressure sensors.

(a) Except where we specify otherwise in this part, must meet the applicable accuracy and precision specifications of ISO 8178–1 (incorporated by reference in § 1065.1010).

(b) Use good engineering judgment to design and operate your temperature and pressure measuring systems to minimize delays in response time and avoid hysteresis.

Subpart C—Test Fuels and Analytical Gases

§ 1065.201 General requirements for test fuels.

(a) For all emission tests, use test fuels meeting the specifications in this subpart, unless the standard-setting part directs otherwise. For any service accumulation on a test engine, if we do not specify a fuel, use the specified test fuel or a fuel typical of what you would expect the engine to use in service.

(b) We may require you to test the engine with each type of fuel it can use (for example, gasoline and natural gas).

(c) If you will produce engines that can run on a type of fuel (or mixture of fuels) that we do not specify in this subpart, we will allow you to test with fuel representing commercially available fuels of that type. However, we must approve your fuel's specifications before you may use it for emission testing.

(d) You may use a test fuel other than those we specify in this subpart if you do all of the following:

(1) Show that it is commercially available.

(2) Show that your engines will use only the designated fuel in service.

(3) Show that operating the engines on the fuel we specify would increase emissions or decrease durability.

(4) Get our written approval before you start testing.

(e) We may allow you to use other test fuels (for example, California Phase 2 gasoline) if they do not affect the demonstration of compliance.

§ 1065.205 Test fuel specifications for distillate diesel fuel. [Reserved]

§ 1065.210 Test fuel specifications for gasoline.

Gasoline used as a test fuel must meet the following specifications:

(a) Unless the standard-setting part requires testing with fuel appropriate for low temperatures, use gasoline test fuels meeting the specifications in the following table:

TABLE 1 OF § 1065.210—GENERAL TEST-FUEL SPECIFICATIONS FOR GASOLINE

Item	Procedure [1]	Value
Distillation Range:		
1. Initial boiling point, °C	ASTM D 86–01	23.9–35.0[2]
2. 10% point, °C	ASTM D 86–01	48.9–57.2
3.50% point, °C	ASTM D 86–01	93.3–110.0
4. 90% point, °C	ASTM D 86–01	148.9–162.8
5. End point, °C (maximum)	ASTM D 86–01	212.8.
Hydrocarbon composition:		
1. Olefins, volume %	ASTM D 1319–02	10 maximum
2. Aromatics, volume %	ASTM D 1319–02	35 maximum
3. Saturates	ASTM D 1319–02	Remainder
Lead (organic), g/liter	ASTM D 3237–97	0.013 maximum
Phosphorous, g/liter	ASTM D 3231–02	0.0013 maximum
Sulfur, weight %	ASTM D 1266–98	0.008 maximum
Volatility (Reid Vapor Pressure), kPa	ASTM D 323–99a	60.0 to 63.4.[2,3]

[1]All ASTM standards are incorporated by reference in § 1065.1010.
[2]For testing at altitudes above 1 219 m, the specified volatility range is 52 to 55 kPa (7.5 to 8.0) and the specified initial boiling point range is 23.9° to 40.6° C.
[3]For testing unrelated to evaporative emissions, the specified range is 55 to 63 kPa (8.0 to 9.1 psi).

(b) If the standard-setting part requires testing with fuel appropriate for low temperatures, use gasoline test fuels meeting the specifications in the following table:

TABLE 2 OF § 1065.210—LOW-TEMPERATURE TEST-FUEL SPECIFICATIONS FOR GASOLINE

Item	Procedure [1]	Value
Distillation Range:		
1. Initial boiling point, °C	ASTM D 86–01	24.4–35.6.
2. 10% point, °C	ASTM D 86–01	36.7–47.8.
3. 50% point, °C	ASTM D 86–01	81.7–101.1.
4. 90% point, °C	ASTM D 86–01	157.8–174.4.
5. End point, °C (maximum)	ASTM D 86–01	211.7.
Hydrocarbon composition:		
1. Olefins, volume %	ASTM D 1319–02	17.5 maximum.
2. Aromatics, volume %	ASTM D 1319–02	30.4 maximum.
3. Saturates	ASTM D 1319–02	Remainder.
Lead (organic), g/liter	ASTM D 3237–97	0.013 maximum.
Phosphorous, g/liter	ASTM D 3231–02	0.005 maximum.
Sulfur, weight %	ASTM D 1266–98	0.08 maximum.
Volatility (Reid Vapor Pressure), kPa	ASTM D 323–99a	11.2—11.8 psi.

[1]All ASTM standards are incorporated by reference in § 1065.1010.

(c) Use gasoline test fuel with octane values that represent commercially available fuels for the appropriate application.

[67 FR 68347, Nov. 8, 2002; 67 FR 72724, Dec. 6, 2002]

§ 1065.215 Test fuel specifications for natural gas.

(a) Natural gas used as a test fuel must meet the specifications in the following table:

TABLE 1 OF § 1065.215—TEST-FUEL SPECIFICATIONS FOR NATURAL GAS

Item	Procedure[1]	Value (mole percent)
1. Methane	ASTM D 1945–96	87.0 minimum.
2. Ethane	ASTM D 1945–96	5.5 maximum.
3. Propane	ASTM D 1945–96	1.2 maximum.
4. Butane	ASTM D 1945–96	0.35 maximum.
5. Pentane	ASTM D 1945–96	0.13 maximum.
6. C6 and higher	ASTM D 1945–96	0.1 maximum.
7. Oxygen	ASTM D 1945–96	1.0 maximum.
8. Inert gases (sum of CO_2 and N_2)	ASTM D 1945–96	5.1 maximum.

[1]All ASTM standards are incorporated by reference in § 1065.1010.

(b) At ambient conditions, the fuel must have a distinctive odor detectable down to a concentration in air of not more than one-fifth of the lower flammability limit.

§ 1065.220 Test fuel specifications for liquefied petroleum gas.

(a) Liquefied petroleum gas used as a test fuel must meet the specifications in the following table:

TABLE 1 OF § 1065.220—TEST-FUEL SPECIFICATIONS FOR LIQUEFIED PETROLEUM GAS

Item	Procedure [1]	Value
1. Propane	ASTM D 2163–91	85.0 vol. percent minimum.
2. Vapor pressure at 38° C	ASTM D 1267–02 or 2598–02 [2]	14 bar maximum.
3. Volatility residue (evaporated temp., 35° C)	ASTM D 1837–02	–38° C maximum.
4. Butanes	ASTM D 2163–91	5.0 vol. percent maximum.
5. Butenes	ASTM D 2163–91	2.0 vol. percent maximum.
6. Pentenes and heavier	ASTM D 2163–91	0.5 vol. percent maximum.
7. Propene	ASTM D 2163–91	10.0 vol. percent maximum.
8. Residual matter (residue on evap. of 100 ml oil stain observ.).	ASTM D 2158–02	0.05 ml maximum pass.[3]
9. Corrosion, copper strip	ASTM D 1838–91	No. 1 maximum.
10. Sulfur	ASTM D 2784–98	80 ppm maximum.
11. Moisture content	ASTM D 2713–91	pass.

[1] All ASTM standards are incorporated by reference in § 1065.1010.
[2] If these two test methods yield different results, use the results from ASTM D 1267–02.
[3] The test fuel must not yield a persistent oil ring when you add 0.3 ml of solvent residue mixture to a filter paper in 0.1 ml increments and examine it in daylight after two minutes (see ASTM D 2158–02).

(b) At ambient conditions, the fuel must have a distinctive odor detectable down to a concentration in air of not over one-fifth of the lower flammability limit.

§ 1065.240 Lubricating oils.

Lubricating oils you use to comply with this part must be commercially available and represent the oil that will be used with your in-use engines.

§ 1065.250 Analytical gases.

Analytical gases that you use to comply with this part must meet the accuracy and purity specifications of this section. You must record the expiration date specified by the gas supplier and may not use any gas after the expiration date.

(a) *Pure gases.* Use the ''pure gases'' shown in the following table:

TABLE 1 OF § 1065.250—CONCENTRATION LIMITS FOR PURE GASES

Gas type	Maximum contaminant concentrations				Oxygen content
	Organic carbon	Carbon monoxide	Carbon dioxide	Nitric oxide (NO)	
Purified Nitrogen	1 ppmC	1 ppm	400 ppm	0.1 ppm	NA.
Purified Oxygen	NA	NA	NA	NA	99.5–100.0%.
Purified Synthetic Air, or Zero-Grade Air.	1 ppmC	1 ppm	400 ppm	0.1 ppm	18–21%.

(b) *Fuel for flame ionization detectors.* Use a hydrogen-helium mixture as the fuel. Make sure the mixture contains 40 ± 2 percent hydrogen and no more than 1 ppmC of organic carbon or 400 ppm of CO_2.

(c) *Calibration and span gases.* Apply the following provisions to calibration and span gases:

(1) Use the following gas mixtures, as applicable, for calibrating and spanning your analytical instruments:

(i) Propane in purified synthetic air. You may ask us to allow you to use propane in purified nitrogen for high concentrations of propane.

(ii) CO in purified nitrogen.

(iii) NO and NO_2 in purified nitrogen (the amount of NO_2 in this calibration gas must not exceed 5 percent of the NO content).

(iv) Oxygen in purified nitrogen.

(v) CO_2 in purified nitrogen.

(vi) Methane in purified synthetic air.

(2) The calibration gases in paragraph (c)(1) of this section must be traceable to within one percent of NIST gas standards or other gas standards we have approved. Span gases in paragraph (c)(1) of this section must be accurate to within two percent of true concentration, where true concentration refers to NIST gas standards, or other gas standards we have approved. Record concentrations of calibration gas as volume percent or volume ppm.

(3) You may use gases for species other than those in paragraph (c)(1) of this section (such as methanol in air gases used to determine response factors), as long as they meet the following criteria:

(i) They are traceable to within ±2 percent of NIST gas standards or other standards we have approved.

(ii) They remain within ±2 percent of the labeled concentration. Show this by measuring quarterly with a precision of ±2 percent (two standard deviations) or by using another method we approve. You may take multiple measurements. If the true concentration of the gas changes by more than two percent, but less than ten percent, you may relabel the gas with the new concentration.

(4) You may generate calibration and span gases using precision blending devices (gas dividers) to dilute gases with purified nitrogen or with purified synthetic air. Make sure the mixing device produces a concentration of blended calibration gases that is accurate to within ± 1.5 percent. To do so, you must know the concentration of primary gases used for blending to an accuracy of at least ± 1 percent, traceable to NIST gas standards or other gas standards we have approved. For each calibration incorporating a blending device, verify the blending accuracy between 15 and 50 percent of full scale. You may optionally check the blending device with an instrument that is linear by nature (for example, using NO gas with a CLD). Adjust the instrument's span value with the span gas connected directly to it. Check the blending device at the used settings to ensure that the difference between

nominal values and measured concentrations at each point stays within ± 0.5 percent of the nominal value.

(d) *Oxygen interference gases.* Gases to check oxygen interference are mixtures of oxygen, nitrogen, and propane. The oxygen concentration must be 20–22 percent and the propane concentration must be 50–90 percent of the maximum value in the most typically used FID range. Independently measure the concentration of total hydrocarbons plus impurities by chromatographic analysis or by dynamic blending.

Subpart D—Analyzer and Equipment Calibrations

§ 1065.301 Overview.

Calibrate all analyzers and equipment at least annually, but make the actual frequency consistent with good engineering judgment. We may establish other guidelines as appropriate. Calibrate following specifications in one of three sources:

(a) Recommendations from the manufacturer of the analyzers or equipment.

(b) 40 CFR part 86, subpart F or subpart N.

(c) 40 CFR part 90, subparts D and E, as applicable.

§ 1065.305 International calibration standards.

(a) You may ask to use international standards for calibration.

(b) You need not ask for approval to use standards that have been shown to be traceable to NIST standards.

§ 1065.310 CVS calibration. [Reserved]

§ 1065.315 Torque calibration.

You must use one of two techniques to calibrate torque: the lever-arm dead-weight or the transfer technique. You may use other techniques if you show they are equally accurate. The NIST ''true value'' torque is defined as the torque calculated by taking the product of an NIST traceable weight or force and a sufficiently accurate horizontal distance along a lever arm, corrected for the lever arm's hanging torque.

(a) The lever-arm dead-weight technique involves placing known weights at a known horizontal distance from the torque-measuring device's center of rotation. You need two types of equipment:

(1) *Calibration weights.* This technique requires at least six calibration weights for each range of torque-measuring device used. Equally space the weights and make sure each one is traceable to NIST weights. You also may use weights certified by a U.S. state government's bureau of weights and measures. If your laboratory is outside the U.S., see § 1065.305 for information about using non-NIST standards. You may account for effects of changes in gravitational constant at the test site.

(2) *Lever arm.* This technique also requires a lever arm at least 20 inches long. Make sure the horizontal distance from the torque-measurement device's centerline to the point where you apply the weight is accurate to within ±0.10 inches. You must balance the arm or know its hanging torque to within ±0.1 ft-lbs.

(b) The transfer technique involves calibrating a master load cell (dynamometer case load cell). You may calibrate the master load cell with known calibration weights at known horizontal distances. Or you may use a hydraulically actuated, precalibrated, master load cell and then transfer this calibration to the device that measures the flywheel torque. The transfer technique involves three main steps:

(1) Precalibrate a master load cell or calibrate it following paragraph (a)(1) of this section. Use known weights traceable to NIST with the lever arms specified in paragraph (b)(2) of this section. Run or vibrate the dynamometer during this calibration to reduce static hysteresis.

(2) Use lever arms at least 20 inches long. The horizontal distances from the master load cell's centerline to the dynamometer's centerline and to the point where you apply weight or force must be accurate to within ±0.10 inches. Balance the arms or know their net hanging torque to within ±0.1 ft-lbs.

(3) Transfer calibration from the case or master load cell to the torque-measuring device with the dynamometer operating at a constant speed. Calibrate

the torque-measurement device's readout to the master load cell's torque readout at a minimum of six loads spaced about equally across the full useful ranges of both measurement devices. (Good engineering practice requires that both devices have about the same useful ranges of torque measurement.) Transfer the calibration so it meets the accuracy requirements in § 1065.105(a)(2) for readouts from the torque-measurement device.

Subpart E—Engine Selection, Preparation, and Service Accumulation

§ 1065.401 Selecting a test engine.

While all engine configurations within a certified engine family must comply with the applicable standards in the standard-setting part, you are not required to test each configuration for certification.

(a) Select for testing according to the following guidance the engine configuration within the engine family that is most likely to exceed an emission standard:

(1) Test the engine that we specify, whether we do this through general guidance or give you specific instructions.

(2) If we do not tell you which engine to test, follow any instructions in the standard-setting part.

(3) If we do not tell you which engine to test and the standard-setting part does not include specifications for selecting test engines, use good engineering judgment to select the engine configuration within the engine family that is most likely to exceed an emission standard.

(b) In the absence of other information, the following characteristics are appropriate to consider when selecting the engine to test:

(1) Maximum fueling rates.

(2) Maximum in-use engine speed (governed or ungoverned, as applicable).

(3) Highest sales volume.

(c) We may select any engine configuration within the engine family for our testing.

§ 1065.405 Preparing and servicing a test engine.

(a) If you are testing an emission-data engine for certification, make sure you have built it to represent production engines.

(b) Run the test engine, with all emission-control systems operating, long enough to stabilize emission levels. If you accumulate 50 hours of operation, you may consider emission levels stable without measurement.

(c) Do not service the test engine before you stabilize emission levels, unless we approve other maintenance in advance. This prohibition does not apply to your recommended oil and filter changes for newly produced engines, or to idle-speed adjustments.

(d) Select engine operation for accumulating operating hours on your test engines to represent normal in-use operation for the engine family.

(e) If you need more than 50 hours to stabilize emission levels, record your reasons and the method you use to do this. Give us these records if we ask for them.

§ 1065.410 Service limits for stabilized test engines.

(a) After you stabilize the test engine's emission levels, you may do scheduled maintenance, other than during emission testing, as the standard-setting part specifies.

(b) You may not do any unscheduled maintenance to the test engine or its emission-control system or fuel system without our advance approval. Unscheduled maintenance includes adjusting, repairing, removing, disassembling, cleaning, or replacing the test engine. We may approve routine maintenance that is not scheduled such as maintaining the proper oil level.

(1) We may approve other unscheduled maintenance if all of the following occur:

(i) You determine that a part failure or system malfunction (or the associated repair) does not make the engine unrepresentative of production engines in the field and does not require anyone to access the combustion chamber.

(ii) Something clearly malfunctions (such as persistent misfire, engine stall, overheating, fluid leakage, or

loss of oil pressure) and needs maintenance or repair.

(iii) You give us a chance to verify the extent of the malfunction before you do the maintenance.

(2) If we determine that a part's failure or a system's malfunction (or the associated repair) has made the engine unrepresentative of production engines, you may no longer use it as a test engine.

(3) You may not do unscheduled maintenance based on emission measurements from the test engine.

(4) Unless we approve otherwise in advance, you may not use equipment, instruments, or tools to identify bad engine components unless you specify they should be used for scheduled maintenance on production engines. In this case, if they are not generally available, you must also make them available at dealerships and other service outlets.

(c) If you do maintenance that might affect emissions, you must completely test the engine for emissions before and after the maintenance, unless we waive this requirement.

(d) If your test engine has a major mechanical failure that requires you to take it apart, you may no longer use it as a test engine.

§ 1065.415 Durability demonstration.

If the standard-setting part requires durability testing, you must accumulate service in a way that represents how you expect the engine to operate in use. You may accumulate service hours using an accelerated schedule, such as through continuous operation.

(a) *Maintenance.* The following limits apply to the maintenance that we allow you to do on test engine:

(1) You may perform scheduled maintenance that you recommend to operators, but only if it is consistent with the standard-setting part's restrictions.

(2) You may perform additional maintenance only if we approve it in advance, as specified in § 1065.410(b).

(3) If your test engine has a major mechanical failure that requires you to take it apart, you may no longer use it as a test engine.

(b) *Emission measurements.* You must measure emissions following two main requirements:

(1) Perform emission tests to determine deterioration factors consistent with good engineering judgment. Evenly space any tests between the first and last test points throughout the durability period.

(2) Perform emission tests following the provisions of this part and the standard-setting part.

Subpart F—Running an Emission Test

§ 1065.501 Overview of the engine dynamometer test procedures.

(a) The engine dynamometer test procedure measures brake-specific emissions of hydrocarbons (total and nonmethane, as applicable), carbon monoxide, and oxides of nitrogen. To perform this test procedure, you first dilute exhaust emissions with ambient air and collect a continuous proportional sample for analysis, then analyze the composite samples (either in bags after the test or continuously during the test). The general test procedure consists of a test cycle made of one or more segments (check the standard-setting part for specific cycles):

(1) Either a cold-start cycle (where you measure emissions) or a warm-up cycle (where you do not measure emissions).

(2) A hot-start transient test (some test cycles may omit engine starting from the ''hot-start'' cycle).

(3) A steady-state test.

(b) Measure power using the dynamometer's feedback signals for torque and speed. The power measurement produces a brake kilowatt-hour value that allows you to calculate brake-specific emissions (see Subpart G of this part).

(c) Prepare engines for testing consistent with § 1065.10(c)(1) and according to the following provisions:

(1) When you test an engine or operate it for service accumulation, use the complete engine with all emission-control devices installed and functioning.

(2) Install the fan for any air-cooled engine (if applicable).

(3) You may install accessories such as an oil cooler, alternators, and air compressors or simulate their loading if they are typical of in-use operation. Apply this loading during all testing operations, including mapping.

(4) You may install a production-type starter on the engine.

(5) Cool the engine in a way that will maintain its operating temperatures including the intake air, oil, water temperatures about the same as they would be during normal operation. You may use auxiliary fans if necessary. You may use rust inhibitors and lubrication additives, up to the levels that the additive manufacturer recommends. You may also use antifreeze mixtures and other coolants typical of those approved for use by the manufacturer.

(6) Use representative exhaust and air-intake systems. Make sure the exhaust restriction is 80 to 100 percent of the recommended maximum specified exhaust restriction and the air inlet restriction is between that of a clean filter and the maximum restriction specification. As the manufacturer, you are liable for emission compliance from the minimum in-use restrictions to the maximum restrictions you specify for that particular engine.

§ 1065.510 Engine mapping procedures.

(a) *Torque map.* Map your engine's torque while it is mounted on the dynamometer. Use the torque curve resulting from the mapping to convert the normalized torque values in the engine cycle to actual torque values for the test cycle. Make sure the speed ranges at least from the warm no-load idle speed to 105 percent of the maximum test speed. Because you determine the maximum test speed from the torque map, you may have to perform a preliminary torque map to determine the full mapping range. You may perform this preliminary torque map while the engine warms up. To map the engine, do the following things in sequence:

(1) Warm up the engine so oil and water temperatures (on an absolute scale such as the Kelvin scale) vary by less than two percent for two minutes; or until the thermostat opens if the engine-coolant system includes a thermostat.

(2) Operate the engine at the warm no-load idle speed.

(3) Fully open the throttle.

(4) While maintaining wide-open throttle and full-load, keep the engine at minimum speed for at least 15 seconds. Record the average torque during the last 5 seconds.

(5) In increments of 100±20 rpm, determine the maximum torque curve for the full speed range. Hold each test point for 15 seconds and record the average torque over the last 5 seconds. You may use larger increments for engines with maximum test speed over 4000 rpm, as long as you include at least 40 points and space them evenly.

(6) Fit all data points recorded with a cubic spline, Akima, or other technique we approve in advance. The resultant curve must be accurate to within ±1.0 ft-lbs. of all recorded engine torques.

(b) *Torque map with continual engine speed sweep.* In place of paragraphs (a)(1) through (a)(4) of this section, you may do a continual sweep of engine speed. While operating at wide-open throttle, increase the engine speed at an average rate of 8±1 rpm/sec over the full speed range. You may use higher sweeping rates for naturally-aspirated engines, in accordance with good engineering judgment. Record speed and torque points at a rate of at least one point per second. Connect all points generated under this approach by linear interpolation.

(c) *Alternate mapping.* You may use other mapping techniques if you believe those in paragraphs (a) and (b) of this section are unsafe or unrepresentative for any engine or engine family. These alternate techniques must satisfy the intent of the specified mapping procedures—to determine the maximum available torque at all engine speeds that occur during the test cycles. Report deviations from this section's mapping techniques for reasons of safety or representativeness. In no case, however, may you use descending continual sweeps of engine speed for governed or turbocharged engines.

(d) *Replicate tests.* You need not map an engine before every test, but you do need to remap the engine in any of the following situations:

(1) Good engineering judgment determines that an unreasonable amount of time has passed since the last map.

(2) The barometric pressure before the test begins has changed more than 25 mm Hg from the average barometric pressure observed during the map.

(3) The engine has undergone physical changes or recalibration that might affect its performance.

(e) *Power map.* Where applicable, generate a power map using the procedures this section specifies for torque maps. You may generate the power map directly or convert the torque map to a power map using engine speeds. The power map is also called a lug curve.

(f) *Cycles based only on torque/power at maximum test speed.* If the applicable test cycle for your engine does not require map information for engine speeds other than the maximum test speed, you may make the following simplifications:

(1) You need not perform the entire torque or power map, as long as you map the engines for speeds between 75 and 105 percent of the maximum test speed.

(2) You need not remap an engine according to paragraph (d) of this section. You need only verify the maximum torque or power at maximum test speed.

§ 1065.515 Test cycle generation.

(a) *Denormalizing test cycles.* The standard-setting parts establish the applicable test cycles consisting of second-by-second specifications for normalized torque and speed for transient cycles, or modal specifications for normalized torque and speed (or power and speed) for steady-state cycles. You must denormalize these values to get actual torque and speed for your engine.

(1) Torque is normalized to a maximum-torque value. Check the standard-setting part to see if it is normalized based on the maximum torque at the given speed or based on the maximum torque for all speeds. To denormalize the torque values in the cycle, use the engine's maximum-torque point or its torque map (§ 1065.510 describes how to generate the torque map).

(2) Power is normalized to a maximum-power value. Check the standard-setting part to see if it is normalized based on the maximum power at the given speed or based on the maximum power for all speeds. To denormalize the power values in the cycle, use the engine's maximum-power point or its power map (§ 1065.510 describes how to generate the power map).

(3) To denormalize speed, use the following equation:

$$\text{Actual engine speed} = (0.01) \times (\%\text{engine speed}) \times (\text{Maximum test speed—warm idle speed}) + \text{warm idle speed}$$

(4) Paragraph (d) of this section describes how to calculate maximum test speed.

(b) *Example of denormalizing a test points.* For an engine with maximum test speed of 3800 rpm and warm idle speed of 600 rpm, denormalize the following test point: percent engine speed = 43, percent torque = 82.

(1) *Calculate actual engine speed.* The following equation applies for this example:

$$\text{Actual engine speed} = (0.01) \times (43) \times (3800 - 600) + 600 = 1976 \text{ rpm}.$$

(2) *Determine actual torque.* Determine the maximum observed torque at 1976 rpm from the maximum torque curve. Then multiply this value (for example, 358 ft-lbs.) by 0.82. The resulting actual torque is 294 ft-lbs.

(c) *Cold-start enhancement devices.* If an engine has a properly operating automatic enhancement device for cold starts, let it override the zero-percent speed specified in the test cycles.

(d) *Maximum test speed.* For constant-speed engines, maximum test speed is the same as the engine's maximum operating speed in use. Maximum test speed for variable-speed engines occurs on the lug curve at the point farthest from the origin on a plot of power vs. speed. To find this speed, follow three main steps:

(1) *Generate the lug curve.* Before testing an engine for emissions, generate data points for maximum measured brake power with varying engine speed (see § 1065.510). These data points form the lug curve.

(2) *Normalize the lug curve.* To normalize the lug curve, do three things:

(i) Identify the point (power and speed) on the lug curve where maximum power occurs.

(ii) Normalize the power values of the lug curve—divide them by the maximum power and multiply the resulting values by 100.

(iii) Normalize the engine speed values of the lug curve—divide them by the speed at which maximum power occurs and multiply the resulting values by 100.

(3) *Determine maximum test speed.* Calculate the maximum test speed from the following speed-factor analysis:

(i) For a given power-speed point, the speed factor is the normalized distance to the power-speed point from the zero-power, zero-speed point. Compute the speed factor's value:

$$\text{Speed factor} = \sqrt{(\text{power})^2 + (\text{speed})^2}$$

(ii) Determine the maximum value of speed factors for all the power-speed data points on the lug curve. Maximum test speed is the speed at which the speed factor's maximum value occurs. Note that this maximum test speed is the 100-percent speed point for normalized transient duty cycles.

(e) *Intermediate test speed.* Determine intermediate test speed with the following provisions:

(1) If peak torque speed is 60 to 75 percent of the maximum test speed, the intermediate speed point is at that same speed.

(2) If peak torque speed is less than 60 percent of the maximum test speed, the intermediate speed point is at 60 percent of maximum test speed.

(3) If peak torque speed is greater than 75 percent of the maximum test speed, the intermediate speed point is at 75 percent of maximum test speed.

§ 1065.520 Engine starting, restarting, and shutdown.

Unless the standard-setting part specifies otherwise, follow the steps in this section to start and shut down the test engine:

(a) *Engine starting.* Start the engine according to the manufacturer's recommended starting procedure in the owner's manual, using either a production starter motor or the dynamometer. Use the dynamometer to crank (or motor) the engine at the typical in-use cranking speed with a fully charged battery (nominal speed ±10 percent), accelerating the engine to cranking speed in the same time it would take with a starter motor (nominal ±0.5 seconds). Stop motoring by the dynamometer within one second of starting the engine. The cycle's free-idle period begins when you determine that the engine has started.

(1) If the engine does not start after 15 seconds of cranking, stop cranking and determine the reason it failed to start. While diagnosing the problem, turn off the device that measures gas flow (or revolution counter) on the constant-volume sampler (and all integrators when measuring emissions continuously). Also, turn off the constant-volume sampler or disconnect the exhaust tube from the tailpipe. If failure to start is an operational error, reschedule the engine for testing (this may require soaking the engine if the test requires a cold-start).

(2) If longer cranking times are necessary, you may use them instead of the 15-second limit, as long as the owner's manual and the service-repair manual describe the longer cranking times as normal.

(3) If an engine malfunction causes a failure to start, you may correct it in less than 30 minutes and continue the test. Reactivate the sampling system at the same time cranking begins. When the engine starts, begin the timing sequence. If an engine malfunction causes a failure to start, and you cannot restart the engine, the test is void.

(b) *Engine stalling.* Respond to engine stalling as follows:

(1) If the engine stalls during the warm-up period, the initial idle period of test, or the steady-state segment, you may restart the engine immediately using the appropriate starting procedure and continue the test.

(2) If the engine stalls at any other time, the test is void.

(c) *Engine shutdown.* Shut the engine down according to the manufacturer's specifications.

§ 1065.525 Engine dynamometer test run.

Take the following steps for each test:

(a) Prepare the engine, dynamometer, and sampling system. Change filters or other replaceable items and check for leaks as necessary.

(b) If you are using bag samples, connect evacuated sample-collection bags to the collection system for the dilute exhaust and dilution air sample.

(c) Attach the CVS to the engine's exhaust system any time before starting the CVS.

(d) Start the CVS (if not already started), the sample pumps, the engine cooling fans, and the data-collection system. Before the test begins, preheat the CVS's heat exchanger (if used) and the heated components of any continuous sampling systems to designated operating temperatures.

(e) Adjust the sample flow rates to the desired levels and set to zero the devices in the CVS that measure gas flow. The venturi design fixes the sample flow rate in a CFV–CVS.

(f) Start the engine if engine starting is not part of the test cycle, as specified in the standard-setting part.

(g) Run the test cycle specified in the standard-setting part and collect the test data.

(h) As soon as practical after the test cycle is complete, analyze the bag samples.

§ 1065.530 Test cycle validation criteria.

(a) *Steady-state emission testing.* Make sure your engine's speeds and loads stay within ±2 percent of the set point during the sampling period.

(b) *Transient emission testing performed by EPA.* Emission tests must meet the specifications of this paragraph (b). Otherwise, they do not comply with the test cycle requirements of the standard-setting part, unless we determine the cause of the failure to meet these specifications is related to the engine rather than the test equipment.

(1) *Shifting feedback signals.* The time lag between the feedback and reference-cycle values may bias results. To reduce this effect, you may advance or delay the entire sequence of engine-speed and torque-feedback signals with respect to the reference sequence for speed and torque. If you shift the feedback signals, you must shift speed and torque the same amount in the same direction.

(2) *Calculating brake kilowatt-hour emissions.* Calculate brake kilowatt-hour emissions for each pair of feedback values recorded for engine speed and torque. Also calculate the reference brake kilowatt-hour for each pair of reference values for engine speed and torque. Calculate to five significant figures.

(3) *Performing regression-line analysis.* Perform regression analysis to calculate validation statistics as follows:

(i) Perform linear regressions of feedback value on reference value for speed, torque, and brake power on 1 Hz data after the feedback shift has occurred (see paragraph (b)(1) of this section). Use the method of least squares, with the best-fit equation having the form:

$$y = mx + b$$

Where:

y = The feedback (actual) value of speed (rpm), torque (ft-lbs.), or brake power.

m = Slope of the regression line.

x = The reference value (speed, torque, or brake power).

b = The y-intercept of the regression line.

(ii) Calculate the standard error of estimate (SE) of y on x and the coefficient of determination (r^2) for each regression line.

(iii) For a valid test, make sure the feedback cycle's integrated brake kilowatt-hour is within 5 percent of the reference cycle's integrated brake kilowatt-hour. Also, ensure that the slope, intercept, standard error, and coefficient of determination meet the criteria in the following table (you may delete individual points from the regression analyses, consistent with good engineering judgment):

TABLE 1 OF § 1065.530—STATISTICAL CRITERIA FOR VALIDATING TEST CYCLES

	Speed	Torque	Power
1. Slope of the regression line (m).	0.980 to 1.020	0.880 to 1.030	0.880 to 1.030.
2. Y intercept of the regression line (b).	$\lvert b \rvert \leq 40$ rpm	$\lvert b \rvert \leq 5.0$ percent of maximum torque from power map.	$\lvert b \rvert \leq 3.0$ percent of maximum torque from power map.
3. Standard error of the estimate of Y on X (SE).	100 rpm	15 percent of maximum torque from power map.	10 percent of maximum power from power map.
4. Coefficient of determination (r^2).	$r^2 \geq 0.970$	$r^2 \geq 0.900$	$r^2 \geq 0.900$.

(c) *Transient testing performed by manufacturers.* Emission tests that meet the specifications of paragraph (b) of this section satisfy the standard-setting part's requirements for test cycles. You may ask to use a dynamometer that cannot meet those specifications, consistent with good engineering practice. We will approve your request as long as using the alternate dynamometer does not affect your ability to show that you comply with all applicable emission standards.

Subpart G—Data Analysis and Calculations

§ 1065.601 Overview.

This subpart describes how to use the responses on the analyzers and other meters to calculate final gram per kilowatt-hour emission rates.

NOTE: Volume and density values used in these calculations are generally corrected to standard conditions of 20°C and 101.3 kPa.)

§ 1065.605 Required records.

Retain the following information for each test:

(a) Test number.

(b) System or device tested (brief description).

(c) Date and time of day for each part of the test schedule.

(d) Test results.

(e) Operator's name.

(f) Engine: ID number, manufacturer, model year, emission standards, engine family, basic engine description, fuel system, engine code, and idle speed, as applicable.

(g) Dynamometer: Dynamometer identification, records to verify compliance with the duty cycle requirements of the test.

(h) Gas analyzers: Analyzer bench identification, analyzer ranges, recordings of analyzer output during zero, span, and sample readings.

(i) Recorder charts: Test number, date, identification, operator's name, and identification of the measurements recorded.

(j) Test cell barometric pressure, ambient temperature, and humidity as required. (Some test systems may require continuous measurements; others may require a single measurement, or measurements before and after the test.)

(k) Temperatures: Records to verify compliance with the ambient temperature requirements throughout the test procedure.

(l) CFV–CVS: Total dilute exhaust volume (Vmix) for each phase of the exhaust test.

(m) PDP–CVS: Test measurements for calculating the total dilute exhaust volume (Vmix), and the Vmix for each phase of the exhaust test.

(n) The humidity of the dilution air.

NOTE: If you do not use conditioning columns, this measurement is not necessary. If you use conditioning columns and take the dilution air from the test cell, you may use the ambient humidity for this measurement.

§ 1065.610 Bag sample analysis.

(a) Zero the analyzers and obtain a stable zero reading. Recheck after tests.

(b) Introduce span gases and set instrument gains. To avoid errors, span and calibrate at the same flow rates used to analyze the test sample. Span gases should have concentrations equal to 75 to 100 percent of full scale. If gain

has shifted significantly on the analyzers, check the calibrations. Show actual concentrations on the chart.

(c) Check zeroes; if necessary, repeat the procedure in paragraphs (a) and (b) of this section.

(d) Check flow rates and pressures.

(e) Measure HC, CO, CO_2, and NO_X concentrations of samples.

(f) Check zero and span points. If the difference is greater than 2 percent of full scale, repeat the procedure in paragraphs (a) through (e) of this section.

§ 1065.615 Bag sample calculations.

(a) Calculate the dilution factor. The dilution factor is the ratio of the total volume of the raw exhaust to the total volume of the diluted exhaust. It is calculated as 134,000 divided by the sum of the diluted ppmC concentrations of carbon-containing compounds in the exhaust, as follows:

$$DF = 134{,}000/(CO_{2sample}+THC_{sample}+CO_{sample}),$$

Where:

$CO_{2sample}$ and CO_{sample} are expressed as ppm, and THC_{sample} is expressed as ppmC.

(b) Calculate mass emission rates (g/test) for the transient segment using the general equation in paragraph (b)(1) of this section:

(1) The general equation is:

Emission rate = (total dilute exhaust flow volume)(ppm)(density factor)/10^6

$$M_x = (V_{mix})(C_i)(f_{di})/10^6$$

Where:

M_x = Mass emission rate in g/test segment.

V_{mix} = Total dilute exhaust flow volume flow in m^3 per test segment corrected to 20°C and 101.3 kPa.

C_i = The concentration of species i, in ppm or ppmC, corrected for background contribution according to the equation in paragraph (b)(2) of this section.

f_{di} = The density factor for species i. The density factors are 576.8 g/m^3 for THC, 1913 g/m^3 for NO_X, and 1164 g/m^3 for CO.

(2) The equation to calculate C_i is:

$$C_i = C_{sample} - C_{background}\,[1-(1/DF)]$$

Where:

C_{sample} = Concentration of species i in the diluted exhaust sample, in ppm or ppmC.

$C_{background}$ = Concentration of species i in the dilution air background sample, in ppm or ppmC.

DF = Dilution factor, as calculated in paragraph (a) of this section.

(c) Calculate total brake work (kW–hr) done during the emissions sampling period of each segment or mode.

(d) Calculate emissions in g/kW–hr by dividing the mass emission rate (g/test segment) by the total brake work for the test segment.

(e) Apply deterioration factors or other adjustment factors to the brake-specific emission rate in paragraph (e) as specified in the standard-setting part.

Subpart H—Particulate Measurements [Reserved]

Subpart I—Testing With Oxygenated Fuels

§ 1065.801 Applicability.

(a) This subpart applies for testing with oxygenated fuels. Except where specified otherwise in the standard-setting part, compliance with this subpart is not required for fuels that contain less than 25 percent oxygenated compounds by volume. For example, you generally would not need to follow the requirements of this subpart for tests performed using a fuel that was 10 percent ethanol and 90 percent gasoline, but you would need to follow these requirements for tests performed using a fuel that was 85 percent ethanol and 15 percent gasoline.

(b) This subpart specifies sampling procedures and calculations that are different than those used for non-oxygenated fuels. The other test procedures of this part apply for testing with oxygenated fuels.

§ 1065.805 Sampling system.

(a) Use the sampling procedures specified in 40 CFR part 86 for methanol and formaldehyde to measure alcohols and aldehydes in the exhaust. This requires the following:

(1) Bubbling a sample of the exhaust through water to collect the alcohols.

(2) Passing a sample of the exhaust through cartridges impregnated with 2,4-dinitrophenylhydrazine to measure aldehydes.

(b) Use good engineering judgment to measure other oxygenated compounds in the exhaust.

§ 1065.810 Calculations.

(a) *THCE emissions.* (1) Calculate THCE emissions as the sum of the mass of the nonoxygenated hydrocarbons in the exhaust and the carbon-equivalent mass of each measured oxygenated species in the exhaust.

(2) Calculate carbon-equivalent mass of each measured oxygenated species from the following equation:

$$\text{Carbon equivalent} = 13.8756 \times MOC/MWPC$$

Where:

MOC is the mass of the oxygenated compound in the exhaust, and MWPC is the molecular weight of compound per carbon atom of compound.

(b) *NMHCE emissions.* Calculate NMHCE emissions as either:

(1) The sum of the mass of the nonoxygenated nonmethane hydrocarbons in the exhaust and the carbon-equivalent mass of each measured oxygenated species in the exhaust.

(2) THCE minus the mass of methane in the exhaust.

(c) *Sample calculation.* (1) Assume the following emissions for a test: 40.00 grams of nonoxygenated hydrocarbons, 100.00 grams of ethanol, and 10.00 grams of acetaldehyde, and 1.00 gram of formaldehyde.

(2) The carbon-equivalent of the masses of oxygenated compounds are:

(i) $13.8756 \times 100.00/(46.068/2) = 60.24$ grams of ethanol.

(ii) $13.8756 \times 10.00/(44.052/2) = 6.30$ grams of acetaldehyde.

(iii) $13.8756 \times 1.00/(30.026) = 0.46$ grams of formaldehyde.

(3) THCE = 40.00 + 60.24 + 6.30 + 0.46 = 107.00 grams per test.

Subpart J—Field Testing

§ 1065.901 Applicability.

(a) The test procedures in this subpart measure brake-specific emissions from engines while they remain installed in vehicles or equipment in the field.

(b) These test procedures apply to your engines as specified in the standard-setting part. For example, part 1048 of this chapter specifies emission standard to be used for in-use tests conducted in accordance with the provisions of this part. Unless this subpart is specifically mentioned in the standard-setting part, compliance with the provisions of this subpart is not required.

§ 1065.905 General provisions.

(a) Unless the standard-setting part specifies deviations from the provisions of this subpart, testing conducted under this subpart must conform to all of the provisions of this subpart.

(b) Testing conducted under this subpart may include any normal in-use operation of the engine.

§ 1065.910 Measurement accuracy and precision.

(a) Measurement systems used for in-use testing must be accurate to within ±5 percent compared to engine dynamometer testing conducted according to the test procedures of this part that are applicable for your engine. These systems must also have a precision of ±5 percent or better. Determine accuracy and precision of an in-use system by simultaneously measuring emissions using the engine-dynamometer test procedures of this part and the in-use system. To have a statistically valid sample, measure emissions during at least 3 tests each for at least 3 different engines. You must conduct these verification tests using the test cycle specified in the standard-setting part, unless we approve a different test cycle.

(1) A system must meet the following conditions to be considered sufficiently accurate:

(i) The correlation coefficient (r) for a least-squares linear fit that includes the origin must be 0.95 or higher.

(ii) The average ratio (for all tests) of the emission rate from the in-use system divided by the emission rate from the dynamometer procedure must be 0.97 to 1.05.

(2) For a system to be considered sufficiently precise, the average coefficient of variance for all engines must be 5 percent or less for each pollutant.

NOTE: Increasing the length of the sampling period may be an effective way to improve precision.

(b) Measurement systems that conform to the provisions of §§ 1065.915 through 1065.950 are considered to be in compliance with the accuracy and precision requirements of paragraph (a) of this section.

§ 1065.915 Equipment specifications for SI engines.

This section describes equipment you may use to measure in-use emissions. You may use other equipment and measurement systems that conform to the requirements of §§ 1065.905 and 1065.910.

(a) The primary components of the in-use measurement system are a mass air flow sensor, a portable FID, a zirconia-based NO_X sensor, a zirconia-based air/fuel ratio sensor, and a portable NDIR analyzer.

(1) The mass air flow sensor must meet the requirements of § 1065.930.

(2) The portable FID must meet the requirements of § 1065.935.

(3) The NO_X and air/fuel sensors must meet the requirements of § 1065.940

(4) The NDIR analyzer must meet the requirements of § 1065.945.

(b) You must measure the following parameters continuously at a rate of 3 Hz or higher and store the data electronically:

(1) THC, NO_X, CO concentrations.

(2) Mass air-fuel ratio.

(3) Intake air flow rate.

(4) Engine speed.

(5) Parameters used to calculate torque.

(c) You must minimize sample line length for any analyzers that require a physical sample be drawn from the exhaust to the analyzer (*i.e.*, THC and CO analyzers). You must draw these samples at a constant flow rate. In no case may you use any combination of sample line length and sample flow rate that would require more than 10 seconds for the analyzer to reach 90 percent of its final response after a step change to the input concentration at the opening of the sample probe. For residence time delays between 1 and 10 seconds, you must correct the measurements to be consistent with the data for engine speed, torque, and air intake. You may also correct other measurements with less than delays less than 1 second.

(d) You may insert the sample probes and sensors into the exhaust pipe, or mount them in an exhaust extension that is connected to the exhaust pipe with negligible leaking. Place the sample probes and sensors close enough to the center line of the exhaust pipe to minimize boundary layer effects from the wall.

§ 1065.920 Equipment setup and test run for SI engines.

This section describes how to set up the equipment specified in § 1065.915, and how to use it to measure in-use emissions from SI engines.

(a) Inspect the vehicle or equipment to determine whether it meets any applicable requirements of the standard-setting part. This may include requirements related to model year, accumulated hours of operation, fuel specifications, maintenance history, engine temperatures, etc.

(b) Perform calibrations as specified in this subpart. In the field, this generally will require only zeroing and spanning the instruments. However, each instrument must have been fully calibrated according to the instrument manufacturer's specifications. Nonlinear calibrations generated previously from the full calibration may be used after zeroing and spanning the instruments. Spanning can be performed using a single gas bottle, consistent with good engineering practice, and provided that stability of the span mixture has been demonstrated.

(c) Connect the data recorder (with any necessary signal interpreters or converters) to the engine's electronic control module.

(d) Disconnect the air intake system, as necessary, to attach the mass air flow sensor. Reconnect the system after attaching the mass air flow sensor.

(e) Attach the sample extension to the exhaust outlet.

(f) Turn on instruments and allow them to warm up as necessary.

(g) Begin sampling. You do not need to begin recording the data at this point.

(h) Begin operating the vehicle or equipment in a normal manner.

NOTE: We may require you to operate the vehicle or equipment in a specific manner.

(i) Begin recording engine speed, engine torque (or surrogate), intake air flow, emissions data (THC, NO_X, CO, air/fuel ratio), and time. This time marks the beginning of the sampling period.

(j) Continue recording data and operating the vehicle or equipment in a normal manner until the end of the sampling period. The length of the sampling period is based on good engineering practice, the precision requirements of § 1065.910, and applicable limits in the standard-setting part.

(k) You may measure background concentrations and correct measured emission values accordingly. However, if any background corrections are equivalent to 5 percent or more of the maximum emissions allowed by the applicable standard, the test shall be voided and repeated in an environment with lower background concentrations.

§ 1065.925 Calculations.

(a) [Reserved]

(b) Convert emission analyzer data to instantaneous concentrations in ppm (ppmC for the FID).

(c) Calculate instantaneous exhaust volumetric flow rates in standard m^3/hr (volume and density values used in these calculations are corrected to standard conditions of 20 °C and 101.3 kPa.). Calculate exhaust volumetric flow rate from the following equation:

Exhaust volumetric flow rate = (intake air mass flow rate)(1+mass fuel/air ratio)/(density of exhaust)

(1) If you do not know the instantaneous density of the exhaust, use the minimum density of the exhaust that occurs over the course of the test, corrected to standard conditions.

(2) For gasoline-fueled engines designed to be operated at stoichiometric fuel/air ratios, you may assume that the density of the exhaust is 1202 g/m^3 at standard conditions of 20 °C and 101.3 kPa.

(3) For LPG-fueled engines designed to be operated at stoichiometric fuel/air ratios, you may assume that the density of the exhaust is 1175 g/m^3 at standard conditions of 20 °C and 101.3 kPa.

(4) For CNG-fueled engines designed to be operated at stoichiometric fuel/air ratios, you may assume that the density of the exhaust is 1149 g/m^3 at standard conditions of 20 °C and 101.3 kPa.

(d) Calculate instantaneous emission rates (g/hr) using the following general equation:

Emission rate = (exhaust volumetric flow rate)(ppm)(density factor)/10^6

Where:

Density factors are 576.8 g/m^3 for THC, 1913 g/m^3 for NO_X, 1164 g/m^3 for CO.

(e) Integrate instantaneous emission rates for the entire specified sample period.

(f) Determine instantaneous brake torque and speed.

(g) Calculate instantaneous brake power.

(h) Integrate instantaneous brake power for the entire specified sample period.

(i) Divide the integrated emission rates by the integrated brake power. These are your final brake-specific emission rates.

§ 1065.930 Specifications for mass air flow sensors.

(a) Measure the intake air flow using the engine's mass air flow sensor. If the engine is not equipped with a mass air flow sensor, you need to install one.

(b) The sensor design must have an accuracy and precision of ±5 percent under steady-state laboratory conditions.

(c) The sensor must reach at least 90 percent of its final response within 0.3 seconds after any step change to the flow rate greater than or equal 80 percent of full scale.

(d) Calibrate the sensor according to good engineering practice. Verify for each engine before testing that the sensor accurately reads the idle intake air flow rate based on measured manifold temperature (T_M) and pressure P_M). Use the following equation:

Intake air flow = (displacement)(rpm)(volumetric efficiency)(P_M/101.3 kPa)(293.15 K/T_M)

§ 1065.935 Specifications for THC analyzers.

(a) Use a flame ionization detector (FID).

(b) The analyzer must have an accuracy and precision of ±2 percent of point or better under steady-state laboratory conditions.

(c) The analyzer must reach at least 90 percent of its final response within 1.0 second after any step change to the input concentration greater than or equal 80 percent of full scale.

(d) Zero and span the analyzer daily during testing. Calibrate it according to the analyzer manufacturer's specifications.

§ 1065.940 Specifications for NO_X and air/fuel sensors.

(a) Use stabilized zirconia-based sensors.

(b) The sensors must have an accuracy and precision of ±2 percent of point or better under steady-state laboratory conditions.

(c) The sensors must reach at least 90 percent of its final response within 1.0 second after any step change to the input concentration greater than or equal 80 percent of full scale.

(d) The sensors must be zeroed and spanned daily during testing, and must be calibrated according to the sensor manufacturer's specifications.

§ 1065.945 Specifications for CO analyzers.

(a) Use a non-dispersive infrared (NDIR) detector that is compensated for CO_2 and water interference.

(b) The analyzer must have an accuracy and precision of ±2 percent of point or better under steady-state laboratory conditions.

(c) The analyzer must reach at least 90 percent of its final response within 5.0 second after any step change to the input concentration greater than or equal 80 percent of full scale.

(d) The analyzer must be zeroed and spanned daily during testing, and must be calibrated according to the analyzer manufacturer's specifications.

§ 1065.950 Specifications for speed and torque measurement.

(a) Determine torque from a previously determined relationship of torque and engine speed, throttle position, and/or manifold absolute pressure. Torque estimates must be between 85 percent and 105 percent of the true value. You can demonstrate compliance with this accuracy requirement using steady-state laboratory data.

(b) Measure speed from the engine's electronic control module. Speed estimates must be within ±5 rpm of the true value.

Subpart K—Definitions and Other Reference Information

§ 1065.1001 Definitions.

The following definitions apply to this part. The definitions apply to all subparts unless we note otherwise. All undefined terms have the meaning the Act gives to them. The definitions follow:

Accuracy means the maximum difference between a measured or calculated value and the true value, where the true value is determined by NIST.

Act means the Clean Air Act, as amended, 42 U.S.C. 7401 *et seq.*

Adjustable parameter means any device, system, or element of design that someone can adjust (including those which are difficult to access) and that, if adjusted, may affect emissions or engine performance during emission testing or normal in-use operation.

Aftertreatment means relating to any system, component, or technology mounted downstream of the exhaust valve or exhaust port whose design function is to reduce exhaust emissions.

Auxiliary emission-control device means any element of design that senses temperature, engine speed, motive speed, transmission gear, atmospheric pressure, manifold pressure or vacuum, or any other parameter to activate, modulate, delay, or deactivate the operation of any part of the emission-control system. This also includes any other feature that causes in-use emissions to be higher than those measured under test conditions, except as we allow under this part.

Brake power has the meaning given in the standard-setting part. If it is not defined in the standard-setting part, brake power means the usable power output of the engine not including power required to operate fuel pumps, oil pumps, or coolant pumps.

Calibration means the set of specifications and tolerances specific to a particular design, version, or application of a component or assembly capable of functionally describing its operation over its working range.

Certification means obtaining a certificate of conformity for an engine family that complies with the emission standards and requirements in this part.

Compression-ignition means relating to a type of reciprocating, internal-combustion engine that is not a spark-ignition engine.

Constant-speed engine means an engine governed to operate only at its rated speed.

Designated Officer means the Manager, Engine Programs Group (6405–J), U.S. Environmental Protection Agency, 1200 Pennsylvania Ave., Washington, DC 20460.

Emission-control system means any device, system, or element of design that controls or reduces the regulated emissions from an engine.

Emission-data engine means an engine that is tested for certification.

Emission-related maintenance means maintenance that substantially affects emissions or is likely to substantially affect emissions deterioration.

Engine means an engine to which this part applies.

Engine-based means having emission standards related to measurements using an engine dynamometer, in units of grams of pollutant per kilowatt-hour.

Engine family means a group of engines with similar emission characteristics, as specified in the standard-setting part.

Equipment-based or vehicle-based means relating to programs that require that a piece of equipment of vehicle be certified, rather than only the engine.

Fuel system means all components involved in transporting, metering, and mixing the fuel from the fuel tank to the combustion chamber(s), including the fuel tank, fuel tank cap, fuel pump, fuel filters, fuel lines, carburetor or fuel-injection components, and all fuel-system vents.

Fuel type means a general category of fuels such as gasoline or LPG. There can be multiple grades within a single type of fuel, such as summer-grade gasoline and winter-grade gasoline.

Good engineering judgment has the meaning we give it in §1068.5 of this chapter.

Identification number means a unique specification (for example, model number/serial number combination) that allows someone to distinguish a particular engine from other similar engines.

Idle speed means the lowest engine speed with zero load.

NOTE: Warm idle speed is the idle speed of a warmed-up engine.

Manufacturer has the meaning given in section 216(1) of the Act. In general, this term includes any person who manufactures an engine for sale in the United States or otherwise introduces a new engine into commerce in the United States. This includes importers that import engines for resale.

Maximum test torque means:

(1) For throttled engines, the torque output observed at wide-open throttle at a given speed.

(2) For non-throttled engines, the torque output observed with the maximum fueling rate possible at a given speed.

Nonmethane hydrocarbons means the sum of all hydrocarbon species measured by a FID except methane, expressed with an assumed mass 13.876 grams per mole of carbon atoms.

Nonroad means relating to nonroad engines.

Nonroad engine has the meaning given in §89.2 of this chapter. In general this means all internal combustion engines except motor vehicle engines, stationary engines, or engines used solely for competition.

Oxides of nitrogen means compounds containing only nitrogen and oxygen. Oxides of nitrogen are expressed quantitatively as if the NO is in the form of NO_2 (assume a molecular weight for all oxides of nitrogen equivalent to that of NO_2). This correction is included in the equations specified for calculating NO_X emissions.

Oxygenated fuel means a fuel that is comprised of oxygen-containing compound, such as ethanol or methanol. Generally, testing engines that use oxygenated fuels requires the use of

the sampling methods in subpart I of this part. However, you should read the standard-setting part and subpart I of this part to determine which sampling methods to use.

Precision means two times the coefficient of variance of multiple measurements, except where specified otherwise.

Revoking a certificate of conformity means discontinuing the certificate for an engine family. If we revoke a certificate, you must apply for a new certificate before continuing to introduce into commerce the affected engines. This does not apply to engines you no longer possess.

Scheduled maintenance means maintenance (*i.e.*, adjusting, repairing, removing, disassembling, cleaning, or replacing components or systems) that is periodically needed to keep a part from failing or malfunctioning. It also may mean actions you expect are necessary to correct an overt indication of failure or malfunction for which periodic maintenance is not appropriate.

Span means to adjust an instrument so that it gives a proper response to a calibration standard that represents between 75 and 100 percent of the maximum value in the instrument range (*e.g.* a span gas).

Spark-ignition means relating to a gasoline-fueled engine or other engines with a spark plug (or other sparking device) and with operating characteristics significantly similar to the theoretical Otto combustion cycle. Spark-ignition engines usually use a throttle to regulate intake air flow to control power during normal operation.

Standard-setting part means the part in the Code of Federal Regulations that defines emission standards for a particular engine (see § 1065.1(a)).

Stoichiometry means the proportion of a mixture of air and fuel such that the fuel is fully oxidized with no remaining oxygen. For example, stoichiometric combustion in gasoline engines typically occurs at an air-fuel mass ratio of about 14.7.

Suspending a certificate of conformity means temporarily discontinuing the certificate for an engine family. If we suspend a certificate, you may not sell engines from that engine family unless we reinstate the certificate or approve a new one.

Test engine means an engine in a test sample.

Test sample means the collection of engines selected from the population of an engine family for emission testing.

Total Hydrocarbon (THC) means the sum of all hydrocarbon species measured by an FID, expressed with an assumed mass 13.876 grams per mole of carbon atoms.

Total Hydrocarbon Equivalent means the sum of the carbon mass contributions of non-oxygenated hydrocarbons, alcohols and aldehydes, or other organic compounds that are measured separately as contained in a gas sample, expressed as petroleum-fueled engine hydrocarbons. The hydrogen-to-carbon ratio of the equivalent hydrocarbon is 1.85:1.

United States means the States, the District of Columbia, the Commonwealth of Puerto Rico, the Commonwealth of the Northern Mariana Islands, Guam, American Samoa, the U.S. Virgin Islands, and the Trust Territory of the Pacific Islands.

Wide-open throttle means maximum throttle opening for throttled engines. Unless this is specified at a given speed, it refers to maximum throttle opening at maximum speed. For electronically controlled or other engines with multiple possible fueling rates, wide-open throttle also means the maximum fueling rate at maximum throttle opening under test conditions.

Zero means to adjust an instrument so that it gives a proper response to a blank calibration standard (*e.g.* zero-grade air).

§ 1065.1005 Symbols, acronyms, and abbreviations.

The following symbols, acronyms, and abbreviations apply to this part:

° degrees.
″ inches.
ASTM American Society for Testing and Materials.
C Celsius.
cc cubic centimeters.
CFR Code of Federal Regulations.
CFV critical-flow venturi.
CI compression-ignition.
CLD chemiluminescent detector.
CO carbon monoxide.
CO_2 carbon dioxide.

CVS constant-volume sampler.
DF deterioration factor.
F Fahrenheit.
EFC electronic flow control.
EPA Environmental Protection Agency.
ft feet.
FID flame ionization detector.
g/kW-hr grams per kilowatt-hour.
g/liter grams per liter.
g/m^3 grams per cubic meter.
Hz hertz.
IBP initial boiling point.
ISO International Organization for Standardization.
kPa kilopascal.
lbs. pounds.
LPG liquefied petroleum gas.
m meters.
ml milliliters.
mm Hg millimeters of mercury.
NDIR nondispersive infrared.
NIST National Institute for Standards and Testing.
NMHC nonmethane hydrocarbons.
NMHCE nonmethane hydrocarbon equivalent.
NO nitric oxide.
NO_2 nitrogen dioxide.
NO_X oxides of nitrogen (NO and NO_2).
O_2 oxygen.
PDP positive-displacement pump.
ppm parts per million.
ppmC parts per million carbon.
RMS root-mean square.
rpm revolutions per minute.
sec seconds.
SI spark-ignition.
THC total hydrocarbon.
THCE total hydrocarbon equivalent.
U.S.C. United States Code.

§ 1065.1010 Reference materials.

We have incorporated by reference the documents listed in this section. The Director of the Federal Register approved the incorporation by reference as prescribed in 5 U.S.C. 552(a) and 1 CFR part 51. Anyone may inspect copies at the U.S. EPA, Air and Radiation Docket and Information Center, 1301 Constitution Ave., NW., Room B102, EPA West Building, Washington, DC 20460 or the Office of the Federal Register, 800 N. Capitol St., NW., 7th Floor, Suite 700, Washington, DC.

(a) *ASTM material.* Table 1 of § 1065.1010 lists material from the American Society for Testing and Materials that we have incorporated by reference. The first column lists the number and name of the material. The second column lists the sections of this part where we reference it. Anyone may purchase copies of these materials from the American Society for Testing and Materials, 100 Barr Harbor Dr., West Conshohocken, PA 19428. Table 1 follows:

TABLE 1 OF § 1065.1010—ASTM MATERIALS

Document number and name	Part 1065 reference
ASTM D 86–01, Standard Test Method for Distillation of Petroleum Products at Atmospheric Pressure	1065.210
ASTM D 323–99a, Standard Test Method for Vapor Pressure of Petroleum Products (Reid Method)	1065.210
ASTM D 1266–98, Standard Test Method for Sulfur in Petroleum Products (Lamp Method)	1065.210
ASTM D 1319–02, Standard Test Method for Hydrocarbon Types in Liquid Petroleum Products by Fluorescent Indicator Adsorption	1065.210
ASTM D 1267–02, Standard Test Method for Gage Vapor Pressure of Liquefied Petroleum (LP) Gases (LP-Gas Method)	1065.220
ASTM D 1837–02, Standard Test Method for Volatility of Liquefied Petroleum (LP) Gases	1065.220
ASTM D 1838–91 (Reapproved 2001), Standard Test Method for Copper Strip Corrosion by Liquefied Petroleum (LP) Gases	1065.220
ASTM D 1945–96 (Reapproved 2001), Standard Test Method for Analysis of Natural Gas by Gas Chromatography	1065.215
ASTM D 2158–02, Standard Test Method for Residues in Liquefied Petroleum (LP) Gases	1065.220
ASTM D 2163–91 (Reapproved 1996), Standard Test Method for Analysis of Liquefied Petroleum (LP) Gases and Propene Concentrates by Gas Chromatography	1065.220
ASTM D 2598–02, Standard Practice for Calculation of Certain Physical Properties of Liquefied Petroleum (LP) Gases from Compositional Analysis	1065.220
ASTM D 2713–91 (Reapproved 2001), Standard Test Method for Dryness of Propane (Valve Freeze Method)	1065.220
ASTM D 2784–98, Standard Test Method for Sulfur in Liquefied Petroleum Gases (Oxy-Hydrogen Burner or Lamp)	1065.220
ASTM D 3231–02, Standard Test Method for Phosphorus in Gasoline	1065.210
ASTM D 3237–97, Standard Test Method for Lead in Gasoline By Atomic Absorption Spectroscopy	1065.210

(b) *ISO material.* Table 2 of § 1065.1010 lists material from the International Organization for Standardization that we have incorporated by reference. The first column lists the number and name of the material. The second column lists the section of this part where we reference it. Anyone may purchase copies of these materials from the International Organization for Standardization, Case Postale 56, CH–1211 Geneva 20, Switzerland. Table 2 follows:

TABLE 2 OF § 1065.1010—ISO MATERIALS

Document number and name	Part 1065 reference
ISO 8178–1, Reciprocating internal combustion engines—Exhaust emission measurement—Part 1: Test-bed measurement of gaseous and particulate exhaust emissions, 1996.	1065.130, 1065.135, 1065.140, 1065.155.

§ 1065.1015 Confidential information.

(a) Clearly show what you consider confidential by marking, circling, bracketing, stamping, or some other method. We will store your confidential information as described in 40 CFR part 2. Also, we will disclose it only as specified in 40 CFR part 2.

(b) If you send us a second copy without the confidential information, we will assume it contains nothing confidential whenever we need to release information from it.

(c) If you send us information without claiming it is confidential, we may make it available to the public without further notice to you, as described in § 2.204 of this chapter.

PART 1068—GENERAL COMPLIANCE PROVISIONS FOR NONROAD PROGRAMS

Subpart A—Applicability and Miscellaneous Provisions

Sec.
1068.1 Does this part apply to me?
1068.5 How must manufacturers apply good engineering judgment?
1068.10 How do I request EPA to keep my information confidential?
1068.15 Who is authorized to represent the Agency?
1068.20 May EPA enter my facilities for inspections?
1068.25 What information must I give to EPA?
1068.30 What definitions apply to this part?
1068.35 What symbols, acronyms, and abbreviations does this part use?

Subpart B—Prohibited Actions and Related Requirements

1068.101 What general actions does this regulation prohibit?
1068.105 What other provisions apply to me specifically if I manufacture equipment needing certified engines?
1068.110 What other provisions apply to engines in service?
1068.115 When must manufacturers honor emission-related warranty claims?
1068.120 What requirements must I follow to rebuild engines?
1068.125 What happens if I violate the regulations?

Subpart C—Exemptions and Exclusions

1068.201 Does EPA exempt or exclude any engines from the prohibited acts?
1068.210 What are the provisions for exempting test engines?
1068.215 What are the provisions for exempting manufacturer-owned engines?
1068.220 What are the provisions for exempting display engines?
1068.225 What are the provisions for exempting engines for national security?
1068.230 What are the provisions for exempting engines for export?
1068.235 What are the provisions for exempting engines used solely for competition?
1068.240 What are the provisions for exempting new replacement engines?
1068.245 What temporary provisions address hardship due to unusual circumstances?
1068.250 What are the provisions for extending compliance deadlines for small-volume manufacturers under hardship?
1068.255 What are the provisions for exempting engines for hardship for equipment manufacturers and secondary engine manufacturers?

Subpart D—Imports

1068.301 Does this subpart apply to me?
1068.305 How do I get an exemption or exclusion for imported engines?
1068.310 What are the exclusions for imported engines?
1068.315 What are the permanent exemptions for imported engines?
1068.320 How must I label an imported engine with a permanent exemption?
1068.325 What are the temporary exemptions for imported engines?
1068.330 How do I import engines to modify for other applications?
1068.335 What are the penalties for violations?

Subpart E—Selective Enforcement Auditing

1068.401 What is a selective enforcement audit?
1068.405 What is in a test order?
1068.410 How must I select and prepare my engines?
1068.415 How do I test my engines?
1068.420 How do I know when my engine family fails an SEA?
1068.425 What happens if one of my production-line engines exceeds the emission standards?
1068.430 What happens if an engine family fails an SEA?
1068.435 May I sell engines from an engine family with a suspended certificate of conformity?
1068.440 How do I ask EPA to reinstate my suspended certificate?
1068.445 When may EPA revoke my certificate under this subpart and how may I sell these engines again?
1068.450 What records must I send to EPA?
1068.455 What records must I keep?
APPENDIX A TO SUBPART E OF PART 1068—PLANS FOR SELECTIVE ENFORCEMENT AUDITING

Subpart F—Reporting Defects and Recalling Engines

1068.501 How do I report engine defects?
1068.505 How does the recall program work?
1068.510 How do I prepare and apply my remedial plan?
1068.515 How do I mark or label repaired engines?
1068.520 How do I notify affected owners?
1068.525 What records must I send to EPA?
1068.530 What records must I keep?
1068.535 How can I do a voluntary recall for emission-related problems?
1068.540 What terms do I need to know for this subpart?

Subpart G—Hearings

1068.601 What are the procedures for hearings?
APPENDIX I TO PART 1068—EMISSION-RELATED COMPONENTS
APPENDIX II TO PART 1068—EMISSION-RELATED PARAMETERS AND SPECIFICATIONS

AUTHORITY: 42 U.S.C. 7401–7671(q).

SOURCE: 67 FR 68347, Nov. 8, 2002, unless otherwise noted.

Subpart A—Applicability and Miscellaneous Provisions

§ 1068.1 Does this part apply to me?

(a) The provisions of this part apply to everyone with respect to the following engines or to equipment using the following engines (including owners, operators, parts manufacturers, and persons performing maintenance):

(1) Large nonroad spark-ignition engines we regulate under 40 CFR part 1048.

(2) Recreational SI engines and vehicles that we regulate under 40 CFR part 1051 (such as snowmobiles and off-highway motorcycles).

(b) This part does not apply to any of the following engine or vehicle categories:

(1) Light-duty motor vehicles (see 40 CFR part 86).

(2) Heavy-duty motor vehicles and motor vehicle engines (see 40 CFR part 86).

(3) Aircraft engines (see 40 CFR part 87).

(4) Locomotive engines (see 40 CFR part 92).

(5) Land-based nonroad diesel engines (see 40 CFR part 89).

(6) Marine diesel engines (see 40 CFR parts 89 and 94)

(7) Marine outboard and personal watercraft engines (see 40 CFR part 91).

(8) Small nonroad spark-ignition engines (see 40 CFR part 90).

(c) For equipment subject to this part and regulated under equipment-based standards, interpret the term ''engine'' in this part to include equipment (see § 1068.30).

(d) Paragraph (a)(1) of this section identifies the parts of the CFR that define emission standards and other requirements for particular types of engines and vehicles. This part 1068 refers to each these other parts generically as the ''standard-setting part.'' For example, 40 CFR part 1051 is always the standard-setting part for snowmobiles. Follow the provisions of the standard-setting part if they are different than any of the provisions in this part.

§ 1068.5 How must manufacturers apply good engineering judgment?

(a) You must use good engineering judgment for decisions related to any requirements under this chapter. This includes your applications for certification, any testing you do to show that your production-line or in-use engines comply with requirements that apply

to them, and how you select, categorize, determine, and apply these requirements.

(b) If we send you a written request, you must give us a written description of the engineering judgment in question. Respond within 15 working days of receiving our request unless we allow more time.

(c) We may reject your decision if it is not based on good engineering judgment or is otherwise inconsistent with the requirements that apply, based on the following provisions:

(1) We may suspend, revoke, or void a certificate of conformity if we determine you deliberately used incorrect information or overlooked important information, that you did not decide in good faith, or that your decision was not rational.

(2) If we believe a different decision would better reflect good engineering judgment, but none of the provisions of paragraph (c)(1) of this section apply, we will tell you of our concern (and its basis). You will have 30 days to respond to our concerns, or more time if we agree that you need it to generate more information. After considering your information, we will give you a final ruling. If we conclude that you did not use good engineering judgment, we may reject your decision and apply the new ruling to similar situations as soon as possible.

(d) We will tell you in writing of the conclusions we reach under paragraph (c) of this section and explain our reasons for them.

(e) If you disagree with our conclusions, you may file a request for a hearing with the Designated Officer as described in subpart F of this part. In your request, specify your objections, include data or supporting analysis, and get your authorized representative's signature. If we agree that your request raises a substantial factual issue, we will hold the hearing according to subpart F of this part.

§ 1068.10 How do I request EPA to keep my information confidential

(a) Clearly identify any information you consider confidential by marking, circling, bracketing, stamping, or some other method. We will store your confidential information as described in 40 CFR part 2. Also, we will disclose it only as specified in 40 CFR part 2. This procedure applies equally to the Environmental Appeals Board.

(b) If you send us a second copy without the confidential information, we will assume it contains nothing confidential whenever we need to release information from it.

(c) If you send us information without claiming it is confidential, we may make it available to the public without further notice to you, as described in § 2.204 of this chapter.

§ 1068.15 Who is authorized to represent the Agency?

(a) The Administrator of the Environmental Protection Agency or any official to whom the Administrator has delegated specific authority may represent the Agency. For more information, ask for a copy of the relevant sections of the EPA Delegation Manual from the Designated Officer.

(b) The regulations in this part and in the standard-setting part have specific requirements describing how to get EPA approval before you take specific actions. These regulations also allow us to waive some specific requirements. For provisions or flexibilities that we address frequently, we may choose to provide detailed guidance in supplemental compliance instructions for manufacturers. Such instructions will generally state how they relate to the need for pre-approval. Unless we explicitly state so, you should not consider full compliance with the instructions to be equivalent to EPA approval.

§ 1068.20 May EPA enter my facilities for inspections?

(a) We may inspect your engines, testing, manufacturing processes, engine storage facilities (including port facilities for imported engines or other relevant facilities), or records, as authorized by the Act, to enforce the provisions of this chapter. Inspectors will have authorizing credentials and will limit inspections to reasonable times—usually, normal operating hours.

(b) If we come to inspect, we may or may not have a warrant or court order.

(1) If we do not have a warrant or court order, you may deny us entry.

(2) If we have a warrant or court order, you must allow us to enter the facility and carry out the activities it describes.

(c) We may seek a warrant or court order authorizing an inspection described in this section, whether or not we first tried to get your permission to inspect.

(d) We may select any facility to do any of the following:

(1) Inspect and monitor any aspect of engine manufacturing, assembly, storage, or other procedures, and any facilities where you do them.

(2) Inspect and monitor any aspect of engine test procedures or test-related activities, including test engine selection, preparation, service accumulation, emission duty cycles, and maintenance and verification of your test equipment's calibration.

(3) Inspect and copy records or documents related to assembling, storing, selecting, and testing an engine.

(4) Inspect and photograph any part or aspect of engines and components you use for assembly.

(e) You must give us reasonable help without charge during an inspection authorized by the Act. For example, you may need to help us arrange an inspection with the facility's managers, including clerical support, copying, and translation. You may also need to show us how the facility operates and answer other questions. If we ask in writing to see a particular employee at the inspection, you must ensure that he or she is present (legal counsel may accompany the employee).

(f) If you have facilities in other countries, we expect you to locate them in places where local law does not keep us from inspecting as described in this section. We will not try to inspect if we learn that local law prohibits it, but we may suspend your certificate if we are not allowed to inspect.

§ 1068.25 What information must I give to EPA?

If you are subject to the requirements of this part, we may require you to give us information to evaluate your compliance with any regulations that apply, as authorized by the Act. This includes the following things:

(a) You must provide the information we require in this chapter.

(b) You must establish and maintain records, perform tests, make reports and provide additional information that we may reasonably require under section 208 of the Act. This also applies to engines we exempt from emission standards.

§ 1068.30 What definitions apply to this part?

The following definitions apply to this part. The definitions apply to all subparts unless we note otherwise. All undefined terms have the meaning the Act gives to them. The definitions follow:

Act means the Clean Air Act, as amended, 42 U.S.C. 7401 *et seq.*

Aircraft means any vehicle capable of sustained air travel above treetop heights.

Certificate holder means a manufacturer (including importers) with a valid certificate of conformity for at least one engine family in a given calendar year.

Designated Officer means the Manager of the Engine Programs Group (6405–J), U.S. Environmental Protection Agency, 1200 Pennsylvania Ave., Washington, DC 20460.

Emission-related defect means a defect in design, materials or workmanship (in an emission control device or vehicle component or system) that affects an emission-related component, parameter, or specification that is identified in Appendix I or Appendix II of this part.

Engine means an engine to which this part applies. For equipment subject to this part and regulated under equipment-based standards, the term engine in this part shall be interpreted to include equipment.

Engine-based means having emission standards related to measurements using an engine dynamometer, in units of grams of pollutant per kilowatt-hour.

Engine manufacturer means the manufacturer that is subject to the certification requirements of the standard-setting part. For vehicles/equipment subject to this part and regulated under vehicle/equipment-based standards, the term engine manufacturer in

this part includes vehicles/equipment manufacturers.

Equipment-based means having emission standards related to measurements from an engine installed in a vehicle using a chassis dynamometer, in units of grams of pollutant per kilometer.

Equipment manufacturer means any company producing a piece of equipment (such as a vehicle) for sale or use in the United States.

Manufacturer has the meaning given in section 216(1) of the Act. In general, this term includes any person who manufactures an engine or vehicle for sale in the United States or otherwise introduces a new engine or vehicle into commerce in the United States. This includes importers that import new engines or new equipment into the United States for resale. It also includes secondary engine manufacturers.

New has the meaning we give it in the standard-setting part.

Nonroad engine means:

(1) Except as discussed in paragraph (2) of this definition, a nonroad engine is any internal combustion engine:

(i) In or on a piece of equipment that is self-propelled or serves a dual purpose by both propelling itself and performing another function (such as garden tractors, off-highway mobile cranes and bulldozers); or

(ii) In or on a piece of equipment that is intended to be propelled while performing its function (such as lawnmowers and string trimmers); or

(iii) That, by itself or in or on a piece of equipment, is portable or transportable, meaning designed to be and capable of being carried or moved from one location to another. Indicia of transportability include, but are not limited to, wheels, skids, carrying handles, dolly, trailer, or platform.

(2) An internal combustion engine is not a nonroad engine if:

(i) The engine is used to propel a motor vehicle or a vehicle used solely for competition, or is subject to standards promulgated under section 202 of the Act; or

(ii) The engine is regulated by a federal New Source Performance Standard promulgated under section 111 of the Act; or

(iii) The engine otherwise included in paragraph (1)(iii) of this definition remains or will remain at a location for more than 12 consecutive months or a shorter period of time for an engine located at a seasonal source. A location is any single site at a building, structure, facility, or installation. Any engine (or engines) that replaces an engine at a location and that is intended to perform the same or similar function as the engine replaced will be included in calculating the consecutive time period. An engine located at a seasonal source is an engine that remains at a seasonal source during the full annual operating period of the seasonal source. A seasonal source is a stationary source that remains in a single location on a permanent basis (*i.e.,* at least two years) and that operates at that single location approximately three months (or more) each year. This paragraph (2)(iii) does not apply to an engine after the engine is removed from the location.

Operating hours means:

(1) For engine storage areas or facilities, times during which people other than custodians and security personnel are at work near, and can access, a storage area or facility.

(2) For other areas or facilities, times during which an assembly line operates or any of the following activities occurs:

(i) Testing, maintenance, or service accumulation.

(ii) Production or compilation of records.

(iii) Certification testing.

(iv) Translation of designs from the test stage to the production stage.

(v) Engine manufacture or assembly.

Piece of equipment means any vehicle, vessel, locomotive, aircraft, or other type of equipment using engines to which this part applies.

Placed into service means used for its intended purpose.

Reasonable technical basis means information that would lead a person familiar with engine design and function to reasonably believe a conclusion, related to compliance with the requirements of this part. For example, it would be reasonable to believe that parts performing the same function as

the original parts (and to the same degree) would control emissions to the same degree as the original parts.

Standard-setting part means the part in the Code of Federal Regulations that defines emission standards for a particular engine (see § 1068.1(a)). For example, the standard-setting part for non-recreational spark-ignition engines over 19 kW is part 1048 of this chapter.

Ultimate purchaser means the first person who in good faith buys a new engine for purposes other than resale.

United States means the States, the District of Columbia, the Commonwealth of Puerto Rico, the Commonwealth of the Northern Mariana Islands, Guam, American Samoa, the U.S. Virgin Islands, and the Trust Territory of the Pacific Islands.

We (us, our) means the Administrator of the Environmental Protection Agency and any authorized representatives.

§ 1068.35 What symbols, acronyms, and abbreviations does this part use?

The following symbols, acronyms, and abbreviations apply to this part:

$ U.S. dollars.
CFR Code of Federal Regulations.
EPA Environmental Protection Agency.
U.S. United States.
U.S.C. United States Code.

Subpart B—Prohibited Actions and Related Requirements

§ 1068.101 What general actions does this regulation prohibit?

This section specifies actions that are prohibited and the maximum civil penalties that we can assess for each violation. The maximum penalty values listed in paragraphs (a) and (b) of this section are shown for calendar year 2002. As described in paragraph (e) of this section, maximum penalty limits for later years are set forth in 40 CFR part 19.

(a) The following prohibitions and requirements apply to manufacturers of new engines and manufacturers of equipment containing these engines, except as described in subparts C and D of this part:

(1) You may not sell, offer for sale, or introduce or deliver into commerce in the United States or import into the United States any new engine or equipment after emission standards take effect for that engine or equipment, unless it has a valid certificate of conformity for its model year and the required label or tag. You also may not take any of the actions listed in the previous sentence with respect to any equipment containing an engine subject to this part's provisions, unless the engine has a valid certificate of conformity for its model year and the required engine label or tag. This requirement also covers new engines you produce to replace an older engine in a piece of equipment, unless the engine qualifies for the replacement-engine exemption in § 1068.240. We may assess a civil penalty up to $31,500 for each engine in violation.

(2) This chapter requires you to record certain types of information to show that you meet our standards. You must comply with these requirements to make and maintain required records (including those described in § 1068.501). You may not deny us access to or copying of your records if we have the authority to see or copy them. Also, you must give us the required reports or information without delay. Failure to comply with the requirements of this paragraph is prohibited. We may assess a civil penalty up to $31,500 for each day in violation.

(3) You may not keep us from entering your facility to test engines or inspect if we are authorized to do so. Also, you must perform the tests we require (or have the tests done for you). Failure to perform this testing is prohibited. We may assess a civil penalty up to $31,500 for each day in violation.

(b) The following prohibitions apply to everyone with respect to the engines to which this part applies:

(1) You may not remove or disable a device or element of design that may affect an engine's emission levels. This restriction applies before and after the engine is placed in service. Section 1068.120 describes how this applies to rebuilding engines. For a manufacturer or dealer, we may assess a civil penalty up to $31,500 for each engine in violation. For anyone else, we may assess a civil penalty up to $3,150 for each engine in violation. This does not apply in any of the following situations:

(i) You need to repair an engine and you restore it to proper functioning when the repair is complete.

(ii) You need to modify an engine to respond to a temporary emergency and you restore it to proper functioning as soon as possible.

(iii) You modify a new engine that another manufacturer has already certified to meet emission standards, intending to recertify it under your own engine family. In this case you must tell the original manufacturer not to include the modified engines in the original engine family.

(2) You may not knowingly manufacture, sell, offer to sell, or install, an engine part if one of its main effects is to bypass, impair, defeat, or disable the engine's control of emissions. We may assess a civil penalty up to $3,150 for each part in violation.

(3) For an engine that is excluded from any requirements of this chapter because it is a stationary engine, you may not move it or install it in any mobile equipment, except as allowed by the provisions of this chapter. You may not circumvent or attempt to circumvent the residence-time requirements of paragraph (2)(iii) of the nonroad engine definition in § 1068.30. We may assess a civil penalty up to $31,500 for each day in violation.

(4) For an uncertified engine or piece of equipment that is excluded or exempted from any requirements of this chapter because it is to be used solely for competition, you may not use it in a manner that is inconsistent with use solely for competition. We may assess a civil penalty up to $31,500 for each day in violation.

(5) You may not import an uncertified engine or piece of equipment if it is defined to be new in the standard-setting part, and it would have been subject to standards had it been built in the United States. We may assess a civil penalty up to $31,500 for each day in violation. Note the following:

(i) The definition of new is broad for imported engines; uncertified engines and equipment (including used engines and equipment) are generally considered to be new when imported.

(ii) Engines that were originally manufactured before applicable EPA standards were in effect are generally not subject to emission standards.

(c) Exemptions from these prohibitions are described in subparts C and D of this part.

(d) The standard-setting parts describe more requirements and prohibitions that apply to manufacturers (including importers) and others under this chapter.

(e) The maximum penalty values listed in paragraphs (a) and (b) of this section are shown for calendar year 2002. Maximum penalty limits for later years may be adjusted based on the Consumer Price Index. The specific regulatory provisions for changing the maximum penalties, published in 40 CFR part 19, reference the applicable U.S. Code citation on which the prohibited action is based. The following table is shown here for informational purposes:

TABLE 1 OF § 1068.101—LEGAL CITATION FOR SPECIFIC PROHIBITIONS FOR DETERMINING MAXIMUM PENALTY AMOUNTS

Part 1068 regulatory citation of prohibited action	General description of prohibition	U.S. Code citation for Clean Air Act authority
§ 1068.101(a)(1)	Introduction into commerce of an uncertified product.	42 U.S.C. 7522(a)(1)
§ 1068.101(a)(1)	Failure to provide information	42 U.S.C. 7522(a)(2)
§ 1068.101(a)(3)	Denying access to facilities	42 U.S.C. 7522(a)(2)
§ 1068.101(b)(1)	Tampering with emission controls by a manufacturer or dealer. Tampering with emission controls by someone other than a manufacturer or dealer.	42 U.S.C. 7522(a)(3)
§ 1068.101(b)(2)	Sale or use of a defeat device	42 U.S.C. 7522(a)(3)

TABLE 1 OF § 1068.101—LEGAL CITATION FOR SPECIFIC PROHIBITIONS FOR DETERMINING MAXIMUM PENALTY AMOUNTS—Continued

Part 1068 regulatory citation of prohibited action	General description of prohibition	U.S. Code citation for Clean Air Act authority
§ 1068.101(b)(3)	Mobile use of a stationary engine	42 U.S.C. 7522(a)(1)
§ 1068.101(b)(4)	Noncompetitive use of an uncertified engine that is exempted for competition.	42 U.S.C. 7522(a)(1)
§ 1068.101(b)(5)	Importation of an uncertified product	42 U.S.C. 7522(a)(1)

§ 1068.105 What other provisions apply to me specifically if I manufacture equipment needing certified engines?

(a) *Transitioning to new standards.* You may use up your normal inventory of engines not certified to new emission standards if they were built before the date of the new standards. However, stockpiling these engines violates § 1068.101(a)(1).

(b) *Installing engines.* You must follow the engine manufacturer's emission-related installation instructions. For example, you may need to constrain where you place an exhaust aftertreatment device or integrate into your equipment models a device for sending visual or audible signals to the operator. Not meeting the manufacturer's emission-related installation instructions is a violation of § 1068.101(b)(1).

(c) *Attaching a duplicate label.* If you obscure the engine's label, you must do three things to avoid violating § 1068.101(a)(1):

(1) Permanently attach to your equipment a duplicate label. Secure it to a part needed for normal operation and not normally requiring replacement.

(2) Make sure your label is identical to the engine label. You may make the label yourself or get it from the engine manufacturer.

(3) Make sure an average person can easily read it.

(d) *Producing nonroad equipment certified to highway emission standards.* You may produce nonroad equipment from complete or incomplete motor vehicles with the motor vehicle engine if you meet three criteria:

(1) The engine or vehicle is certified to 40 CFR part 86.

(2) The engine is not adjusted outside the manufacturer's specifications.

(3) The engine or vehicle is not modified in any way that may affect its emission control. This applies to evaporative emission controls, but not refueling emission controls.

§ 1068.110 What other provisions apply to engines in service?

(a) *Aftermarket parts and service.* As the engine manufacturer, you may not require anyone to use your parts or service to maintain or repair an engine, unless we approve this in your application for certification. It is a violation of the Act for anyone to manufacture an engine or vehicle part if one of its main effects is to reduce the effectiveness of the emission controls. See § 1068.101(b)(2).

(b) *Certifying aftermarket parts.* As the manufacturer or rebuilder of an aftermarket engine part, you may—but are not required to—certify according to § 85.2114 of this chapter that using the part will not cause engines to fail to meet emission standards. Whether you certify or not, however, you must keep any information showing how your parts or service affect emissions.

(c) *Compliance with standards.* We may test engines or equipment to investigate compliance with emission standards. We may also require the manufacturer to do this testing.

(d) *Defeat devices.* We may test engines or equipment to investigate potential defeat devices. We may also require the manufacturer to do this testing. If we choose to investigate one of your designs, we may require you to show us that it does not have a defeat device. To do this, you may have to share with us information regarding

test programs, engineering evaluations, design specifications, calibrations, on-board computer algorithms, and design strategies. It is a violation of the Act for anyone to make, install or use defeat devices. See § 1068.101(b)(2) and the standard-setting part.

(e) *Warranty and maintenance.* Owners may make warranty claims against the manufacturer for emission-related parts, as described in § 1068.115. This generally includes any emission-related engine parts that were not in common use before we have adopted emission standards. In general, we consider replacement or repair of any other components to be the owner's responsibility. The warranty period begins when the engine is first placed into service. See the standard-setting part for specific requirements. It is a violation of the Act for anyone to disable emission controls. See § 1068.101(b)(1) and the standard-setting part.

§ 1068.115 When must manufacturers honor emission-related warranty claims?

Section 207(a) of the Clean Air Act (42 U.S.C. 7541(a)) requires certifying manufacturers to warrant to purchasers that their engines are designed, built, and equipped to conform at the time of sale to the applicable regulations for their full useful life, including a warranty that the engines are free from defects in materials and workmanship that would cause an engine to fail to conform to the applicable regulations during the specified warranty period. This section codifies the warranty requirements of section 207(a) without intending to limit these requirements.

(a) As a certifying manufacturer, you may deny warranty claims for failures that have been caused by the owner's or operator's improper maintenance or use. For example, you would not need to honor warranty claims for failures that have been directly caused by the operator's abuse of an engine or the operator's use of the engine in a manner for which it was not designed, and are not attributable to you in any way.

(b) As a certifying manufacturer, you may not deny emission-related warranty claims based on any of the following:

(1) Maintenance or other service you or your authorized facilities performed.

(2) Engine repair work that an operator performed to correct an unsafe, emergency condition attributable to you, as long as the operator tries to restore the engine to its proper configuration as soon as possible.

(3) Any action or inaction by the operator unrelated to the warranty claim.

(4) Maintenance that was performed more frequently than you specify.

(5) Anything that is your fault or responsibility.

(6) The use of any fuel that is commonly available where the engine operates, unless your written maintenance instructions state that this fuel would harm the engine's emission control system and operators can readily find the proper fuel.

§ 1068.120 What requirements must I follow to rebuild engines?

(a) This section describes the steps to take when rebuilding engines to avoid violating the tampering prohibition in § 1068.101(b)(1). These requirements apply to anyone rebuilding an engine subject to this part, but the recordkeeping requirements in paragraphs (j) and (k) of this section apply only to businesses.

(b) The term ''rebuilding'' refers to a rebuild of an engine or engine system, including a major overhaul in which you replace the engine's pistons or power assemblies or make other changes that significantly increase the service life of the engine. It also includes replacing or rebuilding an engine's turbocharger or aftercooler or the engine's systems for fuel metering or electronic control so that it significantly increases the service life of the engine. For these provisions, rebuilding may or may not involve removing the engine from the equipment. Rebuilding does not normally include the following:

(1) Scheduled emission-related maintenance that the standard-setting part allows during the useful life period (such as replacing fuel injectors).

(2) Unscheduled maintenance that occurs commonly within the useful life period. For example, replacing a water pump is not rebuilding.

(c) For maintenance or service that is not rebuilding, you may not make changes that might increase emissions, but you do not need to keep any records.

(d) If you rebuild an engine or engine system, you must have a reasonable technical basis for knowing that the rebuilt engine has the same emissions performance as the engine in its certified configuration. Identify the model year of the resulting engine configuration. You have a reasonable basis if you meet two main conditions:

(1) Install parts—new, used, or rebuilt—so a person familiar with engine design and function would reasonably believe that the engine with those parts will control emissions to the same degree as with the original parts. For example, it would be reasonable to believe that parts performing the same function as the original parts (and to the same degree) would control emissions to the same degree as the original parts.

(2) Adjust parameters or change design elements only according to the original engine manufacturer's instructions. Or, if you differ from these instructions, you must have data or some other technical basis to show you should not expect in-use emissions to increase.

(e) If the rebuilt engine remains installed or is reinstalled in the same piece of equipment, you must rebuild it to the original configuration or another certified configuration of the same or later model year.

(f) If the rebuilt engine replaces another engine in a piece of equipment, you must rebuild it to a certified configuration that equals the emissions performance of the engine you are replacing.

(g) Do not erase or reset emission-related codes or signals from onboard monitoring systems without diagnosing and responding appropriately to any diagnostic codes. This requirement applies regardless of the manufacturer's reason for installing the monitoring system and regardless of its form or interface. Clear any codes from diagnostic systems when you return the rebuilt engine to service. Do not disable a diagnostic signal without addressing its cause.

(h) When you rebuild an engine, check, clean, adjust, repair, or replace all emission-related components (listed in Appendix I of this part) as needed according to the original manufacturer's recommended practice. In particular, replace oxygen sensors, replace the catalyst if there is evidence of malfunction, clean gaseous fuel system components, and replace fuel injectors (if applicable), unless you have a reasonable technical basis for believing they do not need replacement.

(i) If you are installing an engine that someone else has rebuilt, check all emission-related components listed in Appendix I of this part as needed according to the original manufacturer's recommended practice.

(j) Keep at least the following records:

(1) Identify the hours of operation (or mileage, as appropriate) at time of rebuild.

(2) Identify the work done on the engine or any emission-related control components, including a listing of parts and components you used.

(3) Describe any engine parameter adjustments.

(4) Identify any emission-related codes or signals you responded to and reset.

(k) You must show us or send us your records if we ask for them. Keep records for at least two years after rebuilding an engine. Keep them in any format that allows us to readily review them.

(1) You do not need to keep information that is not reasonably available through normal business practices. We do not expect you to have information that you cannot reasonably access.

(2) You do not need to keep records of what other companies do.

(3) You may keep records based on engine families rather than individual engines if that is the way you normally do business.

§ 1068.125 What happens if I violate the regulations?

(a) *Civil penalties and injunctions.* We may bring a civil action to assess and recover civil penalties and/or enjoin and restrain violations in the United States District Court for the district

where you allegedly violated a requirement, or the district where you live or have your main place of business. Actions to assess civil penalties or restrain violations of §1068.101 must be brought by and in the name of the United States. The selected court has jurisdiction to restrain violations and assess civil penalties.

(1) To determine the amount of a civil penalty and reach a just conclusion, the court considers these main factors:

(i) The seriousness of your violation.

(ii) How much you benefitted or saved because of the violation.

(iii) The size of your business.

(iv) Your history of compliance with Title II of the Act.

(v) What you did to remedy the violation.

(vi) How the penalty will affect your ability to continue in business.

(vii) Such other matters as justice may require.

(2) Subpoenas for witnesses who must attend a district court in any district may apply to any other district.

(b) *Administrative penalties.* Instead of bringing a civil action, we may assess administrative penalties if the total is less than $250,000 against you individually. This maximum penalty may be greater if the Administrator and the Attorney General jointly determine that is appropriate for administrative penalty assessment, or if the limit is adjusted under 40 CFR part 19. No court may review such a determination. Before we assess an administrative penalty, you may ask for a hearing (subject to 40 CFR part 22). The Administrator may compromise or remit, with or without conditions, any administrative penalty that may be imposed under this section.

(1) To determine the amount of an administrative penalty, we will consider the factors described in paragraph (a)(1) of this section.

(2) An administrative order we issue under this paragraph (b) becomes final 30 days after we issue it, unless you ask for judicial review by that time (see paragraph (c) of this section). You may ask for review by any of the district courts listed in paragraph (a) of this section. Send the Administrator a copy of the filing by certified mail.

(3) We will not pursue an administrative action for a violation if either of the following two conditions is true:

(i) We are separately prosecuting the violation under this part.

(ii) We have issued a final order for a violation, no longer subject to judicial review, for which you have already paid a penalty.

(c) *Judicial review.* If you ask a court to review a civil or administrative penalty, we will file in the appropriate court within 30 days of your request a certified copy or certified index of the record on which the court or the Administrator issued the order.

(1) The judge may set aside or remand any order issued under this section only if one of the following is true:

(i) Substantial evidence does not exist in the record, taken as a whole, to support finding a violation.

(ii) The Administrator's assessment of the penalty is an abuse of discretion.

(2) The judge may not add civil penalties unless our penalty is an abuse of discretion that favors you.

(d) *Effect of enforcement actions on other requirements.* Our pursuit of civil or administrative penalties does not affect or limit our authority to enforce any provisions of this chapter.

(e) *Penalties.* In any proceedings, the United States government may seek to collect civil penalties assessed under this section.

(1) Once a penalty assessment is final, if you do not pay it, the Administrator will ask the Attorney General to bring a civil action in an appropriate district court to recover the money. We may collect interest from the date of the final order or final judgment at rates established by the Internal Revenue Code of 1986 (26 U.S.C. 6621(a)(2)). In this action to collect overdue penalties, the court will not review the validity, amount, and appropriateness of the penalty.

(2) In addition, if you do not pay the full amount of a penalty on time, you must then pay more to cover interest, enforcement expenses (including attorney's fees and costs for collection), and a quarterly nonpayment penalty for each quarter you do not pay. The nonpayment penalty is 10 percent of your

total penalties plus any unpaid nonpayment penalties from previous quarters.

Subpart C—Exemptions and Exclusions

§ 1068.201 Does EPA exempt or exclude any engines from the prohibited acts?

We may exempt new engines from the prohibited acts in subpart B of this part under requirements described in this subpart. We may exempt an engine already placed in service in the United States from the prohibition in § 1068.101(b)(1) if the exemption for engines used solely for competition applies (see § 1068.235). In addition, see § 1068.1 and the standard-setting parts to determine if other engines are excluded from some or all of the regulations in this chapter.

(a) This subpart identifies which engines qualify for exemptions and what information we need. We may ask for more information.

(b) If you violate any of the terms, conditions, instructions, or requirements to qualify for an exemption, we may void the exemption.

(c) If you use an exemption under this subpart, we may require you to add a permanent label to your exempted engines. You may ask us to approve wording on the emission label different than we specify in this subpart if it is more appropriate for your engine.

(d) If you produce engines we exempt under this subpart, we may require you to make and keep records, perform tests, make reports and provide information as needed to reasonably evaluate the validity of the exemption.

(e) If you own or operate engines we exempt under this subpart, we may require you to provide information as needed to reasonably evaluate the validity of the exemption.

(f) Subpart D of this part describes how we apply these exemptions to engines you import (or intend to import).

(g) If you want to ask for an exemption or need more information, write to the Designated Officer.

(h) You may ask us to modify the administrative requirements for the exemptions described in this subpart. We may approve your request if we determine that such approval is consistent with the intent of this part. For example, waivable administrative requirements might include some reporting requirements, but would not include any eligibility requirements or use restrictions.

(i) If you want to take an action with respect to an exempted or excluded engine that is prohibited by the exemption or exclusion, such as selling it, you need to certify the engine. We will issue a certificate of conformity if you send us an application for certification showing that you meet all the applicable requirements from the standard-setting part. Also, in some cases, it may be sufficient to modify the engine as needed to make it identical to engines already covered by a certificate. Make sure these engines have emission control information labels that accurately describe their status.

§ 1068.210 What are the provisions for exempting test engines?

(a) We may exempt engines that are not exempted under other sections of this part that you will use for research, investigations, studies, demonstrations, or training.

(b) Anyone may ask for a testing exemption.

(c) If you are a certificate holder, you may request an exemption for engines you intend to include in test programs over a two-year period.

(1) In your request, tell us the maximum number of engines involved and describe how you will make sure exempted engines are used only for this testing.

(2) Give us the information described in paragraph (d) of this section if we ask for it.

(d) If you are not a certificate holder do all of the following:

(1) Show that the proposed test program has a valid purpose under paragraph (a) of this section.

(2) Show you need an exemption to achieve the purpose of the test program (time constraints may be a basis for needing an exemption, but the cost of certification alone is not).

(3) Estimate the duration of the proposed test program and the number of engines involved.

(4) Allow us to monitor the testing.

(5) Describe how you will ensure that you stay within this exemption's purposes. Address at least the following things:

(i) The technical nature of the test.

(ii) The test site.

(iii) The duration and accumulated engine operation associated with the test.

(iv) Ownership of the engines involved in the test.

(v) The intended final disposition of the engines.

(vi) How you will identify, record, and make available the engine identification numbers.

(vii) The means or procedure for recording test results.

(e) If we approve your request for a testing exemption, we will send you a letter or a memorandum for your signature describing the basis and scope of the exemption. The exemption does not take effect until we receive the signed letter or memorandum from you. It will also include any necessary terms and conditions, which normally require you to do the following:

(1) Stay within the scope of the exemption.

(2) Create and maintain adequate records that we may inspect.

(3) Add a permanent, legible label, written in block letters in English, to a readily visible part of each exempted engine. This label must include at least the following items:

(i) The label heading ''EMISSION CONTROL INFORMATION''.

(ii) Your corporate name and trademark.

(iii) Engine displacement, engine family identification (as applicable), and model year of the engine; or whom to contact for further information.

(iv) The statement ''THIS ENGINE IS EXEMPT UNDER 40 CFR 1068.210 FROM EMISSION STANDARDS AND RELATED REQUIREMENTS.''.

(4) Tell us when the test program is finished.

(5) Tell us the final disposition of the engines.

(6) Send us a written confirmation that you meet the terms and conditions of this exemption.

§ 1068.215 What are the provisions for exempting manufacturer-owned engines?

(a) You are eligible for the exemption for manufacturer-owned engines only if you are a certificate holder.

(b) An engine may be exempt without a request if it is a nonconforming engine under your ownership and control and you operate it to develop products, assess production methods, or promote your engines in the marketplace. You may not lease, sell, or use the engine to generate revenue, either by itself or in a piece of equipment.

(c) To use this exemption, you must do three things:

(1) Establish, maintain, and keep adequately organized and indexed information on each exempted engine, including the engine identification number, the use of the engine on exempt status, and the final disposition of any engine removed from exempt status.

(2) Let us access these records, as described in § 1068.20.

(3) Add a permanent, legible label, written in block letters in English, to a readily visible part of each exempted engine. This label must include at least the following items:

(i) The label heading ''EMISSION CONTROL INFORMATION''.

(ii) Your corporate name and trademark.

(iii) Engine displacement, engine family identification, and model year of the engine or whom to contact for further information.

(iv) The statement ''THIS ENGINE IS EXEMPT UNDER 40 CFR 1068.215 FROM EMISSION STANDARDS AND RELATED REQUIREMENTS.''.

§ 1068.220 What are the provisions for exempting display engines?

(a) Anyone may request an exemption for display engines.

(b) A nonconforming display engine will be exempted if it is used only for displays in the interest of a business or the general public. This exemption does not apply to engines displayed for private use or any other purpose we determine is inappropriate for a display exemption.

(c) You may operate the exempted engine, but only if we approve specific operation that is part of the display.

(d) You may sell or lease the exempted engine only with our advance approval; you may not use it to generate revenue.

(e) To use this exemption, you must add a permanent, legible label, written in block letters in English, to a readily visible part of each exempted engine. This label must include at least the following items:

(1) The label heading ''EMISSION CONTROL INFORMATION''.

(2) Your corporate name and trademark.

(3) Engine displacement, engine family identification, and model year of the engine or whom to contact for further information.

(4) The statement ''THIS ENGINE IS EXEMPT UNDER 40 CFR 1068.220 FROM EMISSION STANDARDS AND RELATED REQUIREMENTS.''.

(f) We may set other conditions for approval of this exemption.

§ 1068.225 What are the provisions for exempting engines for national security?

(a) You are eligible for the exemption for national security only if you are a manufacturer.

(b) Your engine is exempt without a request if you produce it for a piece of equipment owned or used by an agency of the federal government responsible for national defense, where the equipment has armor, permanently attached weaponry, or other substantial features typical of military combat.

(c) You may request a national security exemption for engines not meeting the conditions of paragraph (b) of this section, as long as your request is endorsed by an agency of the federal government responsible for national defense. In your request, explain why you need the exemption.

§ 1068.230 What are the provisions for exempting engines for export?

(a) If you export a new engine to a country with emission standards identical to ours, we will not exempt it. These engines must comply with our certification requirements.

(b) If you export an engine to a country with different emission standards or no emission standards, it is exempt from the prohibited acts in this part without a request. If you produce an exempt engine for export and it is sold or offered for sale to someone in the United States (except for export), we will void the exemption.

(c) Label each exempted engine and shipping container with a label or tag showing the engine is not certified for sale or use in the United States. The label must include at least the statement ''THIS ENGINE IS SOLELY FOR EXPORT AND IS THEREFORE IS EXEMPT UNDER 40 CFR 1068.230 FROM U.S. EMISSION STANDARDS AND RELATED REQUIREMENTS.''.

§ 1068.235 What are the provisions for exempting engines used solely for competition?

(a) New engines you produce that are used solely for competition are generally excluded from emission standards. See the standard-setting parts for specific provisions where applicable.

(b) If you modify an engine after it has been placed into service in the United States so it will be used solely for competition, it is exempt without request. This exemption applies only to the prohibition in § 1068.101(b)(1) and is valid only as long as the engine is used solely for competition.

(c) If you modify an engine under this exemption, you must destroy the original emission label. If you sell or give one of these engines to someone else, you must tell the new owner in writing that it may be used only for competition.

§ 1068.240 What are the provisions for exempting new replacement engines?

(a) You are eligible for the exemption for new replacement engines only if you are a certificate holder.

(b) The prohibitions in § 1068.101(a)(1) do not apply to an engine if all the following conditions apply:

(1) You produce a new engine to replace an engine already placed in service in a piece of equipment.

(2) The engine being replaced was manufactured before the emission standards that would otherwise apply to the new engine took effect.

(3) No engine certified to current emission requirements is available

with the appropriate physical or performance characteristics for the piece of equipment.

(4) You or your agent takes possession of the old engine.

(5) You make the replacement engine in a configuration identical in all material respects to the engine being replaced (or that of another certified engine of the same or later model year). This requirement applies only if the old engine was certified to emission standards less stringent than those in effect when you produce the replacement engine.

(c) If the old engine was not certified to any emission standards under this chapter, clearly label the replacement engine with the following language:

THIS ENGINE DOES NOT COMPLY WITH FEDERAL NONROAD OR HIGHWAY EMISSION REQUIREMENTS. SELLING OR INSTALLING THIS ENGINE FOR ANY PURPOSE OTHER THAN AS A REPLACEMENT ENGINE IN A VEHICLE OR PIECE OF EQUIPMENT BUILT BEFORE JANUARY 1, [Insert appropriate year reflecting when standards began to apply to engines of that size and type] IS A VIOLATION OF FEDERAL LAW SUBJECT TO CIVIL PENALTY.

(d) If the old engine was certified to emission standards less stringent than those in effect when you produce the replacement engine, clearly label the replacement engine with the following language:

THIS ENGINE DOES NOT COMPLY WITH CURRENT FEDERAL NONROAD OR HIGHWAY EMISSION REQUIREMENTS. SELLING OR INSTALLING THIS ENGINE FOR ANY PURPOSE OTHER THAN AS A REPLACEMENT ENGINE IN A VEHICLE OR PIECE OF EQUIPMENT BUILT BEFORE JANUARY 1, [Insert appropriate year reflecting when the earlier tier of emission standards began to apply to the old engine] IS A VIOLATION OF FEDERAL LAW SUBJECT TO CIVIL PENALTY.

§ 1068.245 What temporary provisions address hardship due to unusual circumstances?

(a) After considering the circumstances, we may permit you to introduce into commerce engines or equipment that do not comply with emission standards if all the following conditions apply:

(1) Unusual circumstances that are clearly outside your control and that could not have been avoided with reasonable discretion prevent you from meeting requirements from this chapter.

(2) You exercised prudent planning and were not able to avoid the violation; you have taken all reasonable steps to minimize the extent of the nonconformity.

(3) Not having the exemption will jeopardize the solvency of your company.

(4) No other allowances are available under the regulations in this chapter to avoid the impending violation.

(b) To apply for an exemption, you must send the Designated Officer a written request as soon as possible before you are in violation. In your request, show that you meet all the conditions and requirements in paragraph (a) of this section.

(c) Include in your request a plan showing how you will meet all the applicable requirements as quickly as possible.

(d) You must give us other relevant information if we ask for it.

(e) We may include reasonable additional conditions on an approval granted under this section, including provisions to recover or otherwise address the lost environmental benefit or paying fees to offset any economic gain resulting from the exemption. For example, in the case of multiple tiers of emission standards, we may require that you meet the less stringent standards.

(f) Add a permanent, legible label, written in block letters in English, to a readily visible part of each engine exempted under this section. This label must include at least the following items:

(1) The label heading ''EMISSION CONTROL INFORMATION''.

(2) Your corporate name and trademark.

(3) Engine displacement (in liters), rated power, and model year of the engine or whom to contact for further information.

(4) The statement ''THIS ENGINE IS EXEMPT UNDER 40 CFR 1068.245 FROM EMISSION STANDARDS AND RELATED REQUIREMENTS.''.

§ 1068.250 What are the provisions for extending compliance deadlines for small-volume manufacturers under hardship?

(a) After considering the circumstances, we may extend the compliance deadline for you to meet new or revised emission standards, as long as you meet all the conditions and requirements in this section.

(b) To be eligible for this exemption, you must qualify under the standard-setting part for special provisions for small businesses or small-volume manufacturers.

(c) To apply for an extension, you must send the Designated Officer a written request. In your request, show that all the following conditions and requirements apply:

(1) You have taken all possible business, technical, and economic steps to comply.

(i) In the case of importers of engines produced by other companies, show that you attempted to find a manufacturer capable of supplying complying products as soon as you became aware of the applicable requirements, but were unable to do so.

(ii) For all other manufacturers, show that the burden of compliance costs prevents you from meeting the requirements of this chapter.

(2) Not having the exemption will jeopardize the solvency of your company.

(3) No other allowances are available under the regulations in this chapter to avoid the impending violation.

(d) In describing the steps you have taken to comply under paragraph (c)(1) of this section, include at least the following information:

(1) Describe your business plan, showing the range of projects active or under consideration.

(2) Describe your current and projected financial standing, with and without the burden of complying fully with the applicable regulations in this chapter.

(3) Describe your efforts to raise capital to comply with regulations in this chapter (this may not apply for importers).

(4) Identify the engineering and technical steps you have taken or plan to take to comply with regulations in this chapter.

(5) Identify the level of compliance you can achieve. For example, you may be able to produce engines that meet a somewhat less stringent emission standard than the regulations in this chapter require.

(e) Include in your request a plan showing how you will meet all the applicable requirements as quickly as possible.

(f) You must give us other relevant information if we ask for it.

(g) An authorized representative of your company must sign the request and include the statement: ''All the information in this request is true and accurate, to the best of my knowledge.''.

(h) Send your request for this extension at least nine months before the relevant deadline. If different deadlines apply to companies that are not small-volume manufacturers, do not send your request before the regulations in question apply to the other manufacturers. Otherwise, do not send your request more than three years before the relevant deadline.

(i) We may include reasonable requirements on an approval granted under this section, including provisions to recover or otherwise address the lost environmental benefit. For example, we may require that you meet a less stringent emission standard or buy and use available emission credits.

(j) We will approve extensions of up to one year. We may review and revise an extension as reasonable under the circumstances.

(k) Add a permanent, legible label, written in block letters in English, to a readily visible part of each engine exempted under this section. This label must include at least the following items:

(1) The label heading ''EMISSION CONTROL INFORMATION''.

(2) Your corporate name and trademark.

(3) Engine displacement (in liters), rated power, and model year of the engine or whom to contact for further information.

(4) The statement ''THIS ENGINE IS EXEMPT UNDER 40 CFR 1068.250

FROM EMISSION STANDARDS AND RELATED REQUIREMENTS.''.

§ 1068.255 What are the provisions for exempting engines for hardship for equipment manufacturers and secondary engine manufacturers?

This section describes how, in unusual circumstances, we may exempt certain engines to prevent a hardship to an equipment manufacturer or a secondary engine manufacturer. This section does not apply to products that are subject to vehicle-based emission standards.

(a) *Equipment exemption.* As an equipment manufacturer, you may ask for approval to produce exempted equipment for up to 12 months. We will generally limit this to the first year that new or revised emission standards apply. Send the Designated Officer a written request for an exemption before you are in violation. In your request, you must show you are not at fault for the impending violation and that you would face serious economic hardship if we do not grant the exemption. This exemption is not available under this paragraph (a) if you manufacture the engine you need for your own equipment or if complying engines are available from other engine manufacturers that could be used in your equipment, unless we allow it elsewhere in this chapter. We may impose other conditions, including provisions to recover the lost environmental benefit. In determining whether to grant the exemptions, we will consider all relevant factors, including the following:

(1) The number of engines to be exempted.

(2) The size of your company and your ability to endure the hardship.

(3) The amount of time you had to redesign your equipment to accommodate a complying engine.

(4) Whether there was any breach of contract by an engine supplier.

(5) The potential for market disruption.

(b) *Engine exemption.* As an engine manufacturer, you may produce nonconforming engines for the equipment we exempt in paragraph (a) of this section. You do not have to request this exemption for your engines, but you must have written assurance from equipment manufacturers that they need a certain number of exempted engines under this section. Add a permanent, legible label, written in block letters in English, to a readily visible part of each exempted engine. This label must include at least the following items:

(1) The label heading ''EMISSION CONTROL INFORMATION''.

(2) Your corporate name and trademark.

(3) Engine displacement (in liters), rated power, and model year of the engine or whom to contact for further information.

(4) The statement ''THIS ENGINE IS EXEMPT UNDER 40 CFR 1068.255 FROM EMISSION STANDARDS AND RELATED REQUIREMENTS.''.

(c) *Secondary engine manufacturers.* As a secondary engine manufacturer, you may ask for approval to produce exempted engines under this section for up to one year. We may require you to certify your engines to compliance levels above the emission standards that apply. For example, if you need an exemption from a second tier of standards, we may require you to meet the standards that applied to earlier model years.

(1) For the purpose of this section, a secondary engine manufacturer is a manufacturer that produces an engine by modifying an engine that is made by a different manufacturer for a different type of application. This includes, for example, automotive engines converted for use in industrial applications, or land-based engines converted for use in marine applications. This applies whether the secondary engine manufacturer is modifying a complete or partially complete engine and whether the engine was previously certified to emission standards or not. To be a secondary engine manufacturer, you must not be controlled by the manufacturer of the base engine (or by an entity that also controls the manufacturer of the base engine). In addition, equipment manufacturers that substantially modify engines become secondary engine manufacturers. For the purpose of this definition, ''substantially modify'' means changing an engine in a way

that could change its emission characteristics.

(2) The provisions in paragraph (a) of this section that apply to equipment manufacturers requesting an exemption apply equally to you, except that you may manufacture the engines. Before we can approve the exemption under this section, you must commit to a plan to make up the lost environmental benefit.

(i) If you produce uncertified engines under this exemption, we will calculate the lost environmental benefit based on our best estimate of uncontrolled emission rates for your engines.

(ii) If you produce engines under this exemption that are certified to a compliance level less stringent than the emission standards that would otherwise apply, we will calculate the lost environmental benefit based on the compliance level you select for your engines.

(3) The labeling requirements in paragraph (b) of this section apply to your exempted engines; however, if you certify engines to specific compliance levels, state on the label the compliance levels that apply to each engine.

Subpart D—Imports

§ 1068.301 Does this subpart apply to me?

(a) This subpart applies to you if you import into the United States engines or equipment subject to our emission standards or equipment containing engines subject to our emission standards.

(b) In general, engines that you import must be covered by a certificate of conformity unless they were built before emission standards started to apply. This subpart describes the limited cases where we allow importation of exempt or excluded engines.

(c) The U.S. Customs Service may prevent you from importing an engine if you do not meet the requirements of this subpart. In addition, U.S. Customs Service regulations may contain other requirements for engines imported into the United States (see 19 CFR Chapter I).

§ 1068.305 How do I get an exemption or exclusion for imported engines?

(a) Complete the appropriate EPA declaration form before importing any nonconforming engine. These forms are available on the Internet at http://www.epa.gov/OMS/imports/ or by phone at 202–564–9660.

(b) If we ask for it, prepare a written request in which you do the following:

(1) Give your name, address, telephone number, and taxpayer identification number.

(2) Give the engine owner's name, address, telephone number, and taxpayer identification number.

(3) Identify the make, model, identification number, and original production year of each engine.

(4) Identify which exemption or exclusion in this subpart allows you to import a nonconforming engine and describe how your engine qualifies.

(5) Tell us where you will keep your engines if you might need to store them until we approve your request.

(6) Authorize us to inspect or test your engines as the Act allows.

(c) We may ask for more information.

(d) You may import the nonconforming engines you identify in your request if you get prior written approval from us. The U.S. Customs Service may require you to show them the approval letter. We may temporarily or permanently approve the exemptions or exclusions, as described in this subpart.

(e) Make sure the engine meets any labeling requirements that apply.

§ 1068.310 What are the exclusions for imported engines?

Emission standards do not apply to excluded engines that you import. If you show us that your engines qualify under one of the paragraphs of this section, we will approve your request to import excluded engines. You must have our approval to import an engine under paragraph (a) of this section. You may, but are not required to request our approval for the other exclusions in this section. The following engines are excluded:

(a) *Engines used solely for competition.* Engines you use solely for competition are excluded. The standard-setting part

may set special provisions for the manufacture, sale, or import of engines used solely for competition. Section 1068.101(b)(4) prohibits using these excluded engines for other purposes.

(b) *Stationary engines.* This includes engines that will be used in a permanently fixed location and engines meeting the criteria for the exclusion in paragraph (2)(iii) of the nonroad engine definition in §1068.30. Section 1068.101(b)(3) prohibits using these engines for other purposes.

(c) *Other engines.* The standard-setting parts may exclude engines used in certain applications. For example, engines used in aircraft, underground mining, and hobby vehicles are generally excluded.

§1068.315 What are the permanent exemptions for imported engines?

We may approve a permanent exemption for an imported engine under the following conditions:

(a) *National security exemption.* You may import engine under the national security exemption in §1068.225.

(b) *Manufacturer-owned engine exemption.* You may import a manufacturer-owned engine, as described in §1068.215.

(c) *Replacement engine exemption.* You may import a nonconforming replacement engine as described in §1068.240. To use this exemption, you must be a certificate holder for an engine family we regulate under the same part as the replacement engine.

(d) *Extraordinary circumstances exemption.* You may import a nonconforming engine if we grant hardship relief as described in §1068.245.

(e) *Hardship exemption.* You may import a nonconforming engine if we grant an exemption for the transition to new or revised emission standards, as described in §1068.255.

(f) *Identical configuration exemption.* You may import a nonconforming engine if it is identical to certified engines produced by the same manufacturer, subject to the following provisions:

(1) You may import only the following engines under this exemption:

(i) Large nonroad spark-ignition engines (see part 1048 of this chapter).

(ii) Recreational nonroad spark-ignition engines and equipment (see part 1051 of this chapter).

(2) You must meet all the following criteria:

(i) You have owned the engine for at least one year.

(ii) You agree not to sell, lease, donate, trade, or otherwise transfer ownership of the engine for at least five years, or until the engine is eligible for the exemption in paragraph (g) of this section. During this period, the only acceptable way to dispose of the engine is to destroy or export it.

(iii) You use data or evidence sufficient to show that the engine is in a configuration that is the same as an engine the original manufacturer has certified to meet emission standards that apply at the time the manufacturer finished assembling or modifying the engine in question. If you modify the engine to make it identical, you must follow the original manufacturer's complete written instructions.

(3) We will tell you in writing if we find the information insufficient to show that the engine is eligible for this exemption. In this case, we will not consider your request further until you address our concerns.

(g) *Ancient engine exemption.* If you are not the original engine manufacturer, you may import a nonconforming engine that is subject to a standard-setting part and was first manufactured at least 21 years earlier, as long as it is still in its original configuration.

§1068.320 How must I label an imported engine with a permanent exemption?

(a) For engines imported under §1068.315 (a), (b), (c), (d), or (e), you must place a permanent label or tag on each engine. If no specific label requirements from subpart C of this part apply, you must meet the following requirements:

(1) Attach the label or tag in one piece so no one can remove it without destroying or defacing it.

(2) Make sure it is durable and readable for the engine's entire life.

(3) Secure it to a part of the engine needed for normal operation and not normally requiring replacement.

(4) Write it in block letters in English.

(5) Make it readily visible to the average person after the engine is installed in the equipment.

(b) On the engine label or tag, do the following:

(1) Include the heading ''Emission Control Information.''

(2) Include your full corporate name and trademark.

(3) State the engine displacement (in liters) and rated power. If the engine's rated power is not established, state the approximate power rating accurately enough to allow a detemination of which stanadards would otherwise apply.

(4) State: ''THIS ENGINE IS EXEMPT FROM THE REQUIREMENTS OF [identify the part referenced in 40 CFR 1068.1(a) that would otherwise apply], AS PROVIDED IN [identify the paragraph authorizing the exemption (for example, ''40 CFR 1068.315(a)'')]. INSTALLING THIS ENGINE IN ANY DIFFERENT APPLICATION IS A VIOLATION OF FEDERAL LAW SUBJECT TO CIVIL PENALTY.''.

(c) Get us to approve alternate label language if it is more accurate for your engine.

§ 1068.325 What are the temporary exemptions for imported engines?

If we approve a temporary exemption for an engine, you may import it under the conditions in this section. We may ask the U.S. Customs Service to require a specific bond amount to make sure you comply with the requirements of this subpart. You may not sell or lease one of these engines while it is in the United States. You must eventually export the engine as we describe in this section unless you get a certificate of conformity for it or it qualifies for one of the permanent exemptions in § 1068.315. Section 1068.330 specifies an additional temporary exemption allowing you to import certain engines you intend to sell or lease.

(a) *Exemption for repairs or alterations.* You may temporarily import a nonconforming engine under bond solely to repair or alter it. You may operate the engine in the United States only to repair or alter it or to ship it to or from the service location. Export the engine directly after the engine servicing is complete.

(b) *Testing exemption.* You may temporarily import a nonconforming engine under bond for testing if you follow the requirements of § 1068.210. You may operate the engine in the United States only to allow testing. This exemption expires one year after you import the engine, unless we approve a one-time request for an extension of up to one more year. The engine must be exported before the exemption expires.

(c) *Display exemption.* You may temporarily import a nonconforming engine under bond for display, as described in § 1068.220. This exemption expires one year after you import the engine, unless we approve your request for an extension. We may approve an extension of up to one more year for each request, but no more than three years in total. The engine must be exported by the time the exemption expires or directly after the display concludes, whichever comes first.

(d) *Export exemption.* You may temporarily import a nonconforming engine to export it, as described in § 1068.230. You may operate the engine in the United States only as needed to prepare it for export. Label the engine as described in § 1068.230.

(e) *Diplomatic or military exemption.* You may temporarily import nonconforming engines without bond if you represent a foreign government in a diplomatic or military capacity. In your request to the Designated Officer (see § 1068.305), include either written confirmation from the U.S. State Department that you qualify for this exemption or a copy of your orders for military duty in the United States. We will rely on the State Department or your military orders to determine when your diplomatic or military status expires, at which time you must export your exempt engines.

§ 1068.330 How do I import engines to modify for other applications?

This section allows you to import engines in configurations different than their final configuration. This exemption is temporary, as described in paragraph (d) of this section.

(a) This section applies in the following cases:

(1) You import a partially complete engine with the intent to manufacture complete engines for which you have either a certificate of conformity or an exemption that allows you to sell completed engines.

(2) You import an uncertified complete engine with the intent to modify it for installation in an application different than its otherwise intended application (for example, you import a land-based engine to modify it for a marine application). In this case, to qualify for an exemption under this section, you need either a certificate of conformity or an exemption that allows you to sell completed engines.

(3) You import a complete or partially complete engine to modify for an application for which emission standards do not apply.

(b) You may request this exemption in an application for certification. Otherwise, send your request to the Designated Officer. Your request must include:

(1) The name of the supplier of the partially complete engine, or the original manufacturer of the complete engine.

(2) A description of the certificate or exemption that will apply to the engines in the final configuration, or an explanation why a certificate or exemption is not needed.

(3) A brief description of how and where final assembly will be completed.

(4) An unconditional statement that the engines will comply with all applicable regulations in their final configuration.

(c) If we approve a temporary exemption for an engine, you may import it under the conditions in this section. We may ask the U.S. Customs Service to require a specific bond amount to make sure you comply with the requirements of this subpart.

(d) These provisions are intended only to allow you to import engines in the specific circumstances identified in this section, so any exemption under this section expires when you complete the assembly of the engine in its final configuration. If the engine in its final configuration is subject to emission standards, then it must be covered by a certificate or a different exemption before you introduce it into commerce.

§ 1068.335 What are the penalties for violations?

(a) *All imported engines.* Unless you comply with the provisions of this subpart, importation of nonconforming engines is violation of sections 203 and 213(d) of the Act. You may then have to export the engines, or pay civil penalties, or both. The U.S. Customs Service may seize unlawfully imported engines.

(b) *Temporarily imported engines.* If you do not comply with the provisions of this subpart for a temporary exemption, you may forfeit the total amount of the bond in addition to the sanctions we identify in paragraph (a) of this section. We will consider an engine to be exported if it has been destroyed or delivered to the U.S. Customs Service for export or other disposition under applicable Customs laws and regulations. EPA or the U.S. Customs Service may offer you a grace period to allow you to export a temporarily exempted engine without penalty after the exemption expires.

Subpart E—Selective Enforcement Auditing

§ 1068.401 What is a selective enforcement audit?

(a) We may conduct or require you to conduct emission tests on your production engines in a selective enforcement audit. This requirement is independent of any requirement for you to routinely test production-line engines.

(b) If we send you a signed test order, you must follow its directions and the provisions of this subpart. We will tell you where to test the engines. This may be where you produce the engines or any other emission testing facility.

(c) If we select one or more of your engine families for a selective enforcement audit, we will send the test order to the person who signed the application for certification or we will deliver it in person.

(d) Within one working day of receiving the test order, notify the Designated Officer which test facility you have selected for emission testing.

(e) You must do everything we require in the audit without delay.

§ 1068.405 What is in a test order?

(a) In the test order, we will specify the following things:

(1) The engine family and configuration (if any) we have identified for testing.

(2) The engine assembly plant, storage facility, or (if you import the engines) port facility from which you must select engines.

(3) The procedure for selecting engines for testing, including a selection rate.

(4) The test procedures, duty cycles, and test points, as appropriate, for testing the engines to show that they meet emission standards.

(b) We may state that we will select the test engines.

(c) We may identify alternate engine families or configurations for testing in case we determine the intended engines are not available for testing or if you do not produce enough engines to meet the minimum rate for selecting test engines.

(d) We may include other directions or information in the test order.

(e) We may ask you to show us that you meet any additional requirements that apply to your engines (closed crankcases, for example).

(f) In anticipation of a potential audit, you may give us a list of your preferred engine families and the corresponding assembly plants, storage facilities, or (if you import the engines) port facilities from which we should select engines for testing. The information would apply only for a single model year, so it would be best to include this information in your application for certification. If you give us this list before we issue a test order, we will consider your recommendations, but we may select engines differently.

(g) If you also do routine production-line testing with the selected engine family in the same time period, the test order will tell you what changes you might need to make in your production-line testing schedule.

§ 1068.410 How must I select and prepare my engines?

(a) *Selecting engines.* Select engines as described in the test order. If you are unable to select test engines this way, you may ask us to approve an alternate plan, as long as you make the request before you start selecting engines.

(b) *Assembling engines.* Produce and assemble test engines using your normal production and assembly process for that engine family.

(1) Notify us directly if you make any change in your production, assembly, or quality control processes that might affect emissions between the time you receive the test order and the time you finish selecting test engines.

(2) If you do not fully assemble engines at the specified location, we will describe in the test order how to select components to finish assembling the engines. Assemble these components onto the test engines using your documented assembly and quality control procedures.

(c) *Modifying engines.* Once an engine is selected for testing, you may adjust, repair, prepare, or modify it or check its emissions only if one of the following is true:

(1) You document the need for doing so in your procedures for assembling and inspecting all your production engines and make the action routine for all the engines in the engine family.

(2) This subpart otherwise allows your action.

(3) We approve your action in advance.

(d) *Engine malfunction.* If an engine malfunction prevents further emission testing, ask us to approve your decision to either repair the engine or delete it from the test sequence.

(e) *Setting adjustable parameters.* Before any test, we may adjust or require you to adjust any adjustable parameter to any setting within its physically adjustable range.

(1) We may adjust idle speed outside the physically adjustable range as needed until the engine has stabilized emission levels (see paragraph (e) of this section). We may ask you for information needed to establish an alternate minimum idle speed.

(2) We may make or specify adjustments within the physically adjustable range by considering their effect on emission levels, as well as how likely it is someone will make such an adjustment with in-use engines.

(f) *Stabilizing emission levels.* Before you test production-line engines, you may operate the engine to stabilize the emission levels. Using good engineering judgment, operate your engines in a way that represents the way production engines will be used. You may operate each engine for no more than the greater of two periods:

(1) 50 hours.

(2) The number of hours you operated your emission-data engine for certifying the engine family (see 40 CFR part 1065, subpart E).

(g) *Damage during shipment.* If shipping an engine to a remote facility for production-line testing makes necessary an adjustment or repair, you must wait until after the initial emission test to do this work. We may waive this requirement if the test would be impossible or unsafe, or if it would permanently damage the engine. Report to us, in your written report under § 1068.450, all adjustments or repairs you make on test engines before each test.

(h) *Shipping engines.* If you need to ship engines to another facility for testing, make sure the test engines arrive at the test facility within 24 hours after being selected. You may ask that we allow more time if you are unable to do this.

(i) *Retesting after invalid tests.* You may retest an engine if you determine an emission test is invalid. Explain in your written report reasons for invalidating any test and the emission results from all tests. If you retest an engine and, within ten days after testing, ask to substitute results of the new tests for the original ones, we will answer within ten days after we receive your information.

§ 1068.415 How do I test my engines?

(a) Use the test procedures specified in the standard-setting part for showing that your engines meet emission standards. The test order will give further testing instructions.

(b) If no test cells are available at a given facility, you may make alternate testing arrangements with our approval.

(c) Test at least two engines in each 24-hour period (including void tests). However, if your projected U.S. nonroad engine sales within the engine family are less than 7,500 for the year, you may test a minimum of one engine per 24-hour period. If you request and justify it, we may approve a lower testing rate.

(d) Accumulate service on test engines at a minimum rate of 6 hours per engine during each 24-hour period. The first 24-hour period for service accumulation begins when you finish preparing an engine for testing. The minimum service accumulation rate does not apply on weekends or holidays. You may ask us to approve a lower service accumulation rate. Plan your service accumulation to allow testing at the rate specified in § 1068.415. Select engine operation for accumulating operating hours on your test engines to represent normal in-use engine operation for the engine family.

(e) Test engines is the same order you select them.

§ 1068.420 How do I know when my engine family fails an SEA?

(a) A failed engine is one whose final deteriorated test results exceed an applicable emission standard for any regulated pollutant.

(b) Continue testing engines until you reach a pass decision for all pollutants or a fail decision for one pollutant.

(c) You reach a pass decision for the SEA requirements when the number of failed engines is less than or equal to the pass decision number in Appendix A to this subpart for the total number of engines tested. You reach a fail decision for the SEA requirements when the number of failed engines is greater than or equal to the fail decision number in Appendix A to this subpart for the total number of engines you test. An acceptable quality level of 40 percent is the basis for the pass or fail decision.

(d) Consider test results in the same order as the engine testing sequence.

(e) If you reach a pass decision for one pollutant, but need to continue testing for another pollutant, we will disregard these later test results for the pollutant with the pass decision.

(f) Appendix A to this subpart lists multiple sampling plans. Use the sampling plan for the projected sales volume you reported in your application for the audited engine family.

(g) We may choose to stop testing after any number of tests.

(h) If we test some of your engines in addition to your own testing, we may decide not to include your test results as official data for those engines if there is substantial disagreement between your testing and our testing. We will reinstate your data as valid if you show us that we made an error and your data are correct.

(i) If we rely on our test data instead of yours, we will notify you in writing of our decision and the reasons we believe your facility is not appropriate for doing the tests we require under this subpart. You may request in writing that we consider your test results from the same facility for future testing if you show us that you have made changes to resolve the problem.

§ 1068.425 What happens if one of my production-line engines exceeds the emission standards?

(a) If one of your production-line engines fails to meet one or more emission standards (see § 1068.420), the certificate of conformity is automatically suspended for that engine. You must take the following actions before your certificate of conformity can cover that engine:

(1) Correct the problem and retest the engine to show it complies with all emission standards.

(2) Include in your written report a description of the test results and the remedy for each engine (see § 1068.450).

(b) You may at any time ask for a hearing to determine whether the tests and sampling methods were proper (see subpart G of this part).

§ 1068.430 What happens if an engine family fails an SEA?

(a) We may suspend your certificate of conformity for an engine family if it fails the SEA under § 1068.420. The suspension may apply to all facilities producing engines from an engine family, even if you find noncompliant engines only at one facility.

(b) We will tell you in writing if we suspend your certificate in whole or in part. We will not suspend a certificate until at least 15 days after the engine family fails the SEA. The suspension is effective when you receive our notice.

(c) Up to 15 days after we suspend the certificate for an engine family, you may ask for a hearing to determine whether the tests and sampling methods were proper (see subpart G of this part). If we agree before a hearing that we used erroneous information in deciding to suspend the certificate, we will reinstate the certificate.

§ 1068.435 May I sell engines from an engine family with a suspended certificate of conformity?

You may sell engines that you produce after we suspend the engine family's certificate of conformity only if one of the following occurs:

(a) You test each engine you produce and show it complies with emission standards that apply.

(b) We conditionally reinstate the certificate for the engine family. We may do so if you agree to recall all the affected engines and remedy any noncompliance at no expense to the owner if later testing shows that engines in the engine family still do not comply.

§ 1068.440 How do I ask EPA to reinstate my suspended certificate?

(a) Send us a written report asking us to reinstate your suspended certificate. In your report, identify the reason for the SEA failure, propose a remedy, and commit to a date for carrying it out. In your proposed remedy include any quality control measures you propose to keep the problem from happening again.

(b) Give us data from production-line testing showing that engines in the remedied engine family comply with all the emission standards that apply.

§ 1068.445 When may EPA revoke my certificate under this subpart and how may I sell these engines again?

(a) We may revoke your certificate for an engine family in the following cases:

(1) You do not meet the reporting requirements.

(2) Your engine family fails an SEA and your proposed remedy to address a suspended certificate is inadequate to solve the problem or requires you to change the engine's design or emission-control system.

(b) To sell engines from an engine family with a revoked certificate of conformity, you must modify the engine family and then show it complies with the applicable requirements.

(1) If we determine your proposed design change may not control emissions for the engine's full useful life, we will tell you within five working days after receiving your report. In this case we will decide whether production-line testing will be enough for us to evaluate the change or whether you need to do more testing.

(2) Unless we require more testing, you may show compliance by testing production-line engines as described in this subpart.

(3) We will issue a new or updated certificate of conformity when you have met these requirements.

§ 1068.450 What records must I send to EPA?

(a) Within 30 calendar days of the end of each audit, send us a report with the following information:

(1) Describe any facility used to test production-line engines and state its location.

(2) State the total U.S.-directed production volume and number of tests for each engine family.

(3) Describe your test engines, including the engine family's identification and the engine's model year, build date, model number, identification number, and number of hours of operation before testing for each test engine.

(4) Identify where you accumulated hours of operation on the engines and describe the procedure and schedule you used.

(5) Provide the test number; the date, time and duration of testing; test procedure; initial test results before and after rounding; final test results; and final deteriorated test results for all tests. Provide the emission figures for all measured pollutants. Include information for both valid and invalid tests and the reason for any invalidation.

(6) Describe completely and justify any nonroutine adjustment, modification, repair, preparation, maintenance, or test for the test engine if you did not report it separately under this subpart. Include the results of any emission measurements, regardless of the procedure or type of equipment.

(7) Report on each failed engine as described in § 1068.425.

(b) We may ask you to add information to your written report, so we can determine whether your new engines conform with the requirements of this subpart.

(c) An authorized representative of your company must sign the following statement:

> We submit this report under Sections 208 and 213 of the Clean Air Act. Ourtesting conformed completely with the requirements of 40 CFR part 1068. We have not changed production processes or quality-control procedures for the engine family in a way that might affect the emission control from production engines. All the information in this report is true and accurate, to the best of my knowledge. I know of the penalties for violating the Clean Air Act and the regulations. (Authorized Company Representative)

(d) Send reports of your testing to the Designated Officer using an approved information format. If you want to use a different format, send us a written request with justification for a waiver.

(e) We will send copies of your reports to anyone from the public who asks for them. We will release information about your sales or production volumes, which is all we will consider confidential.

§ 1068.455 What records must I keep?

(a) We may review your records at any time, so it is important to keep required information readily available. Organize and maintain your records as described in this section.

(b) Keep paper records for testing under this subpart for one full year after you complete all the testing required for the selective enforcement audit. For additional storage, you may use any format or media.

(c) Keep a copy of the written reports described in § 1068.450.

(d) Keep the following additional records:

(1) The names of supervisors involved in each test.

(2) The name of anyone who authorizes adjusting, repairing, preparing, or modifying a test engine and the names of all supervisors who oversee this work.

(3) If you shipped the engine for testing, the date you shipped it, the associated storage or port facility, and the date the engine arrived at the testing facility.

(4) Any records related to your audit that are not in the written report.

(5) A brief description of any significant events during testing not otherwise described in the written report or in this section.

(e) If we ask, you must give us projected or actual production for an engine family. Include each assembly plant if you produce engines at more than one plant.

(f) We may ask you to keep or send other information necessary to implement this subpart.

APPENDIX A TO SUBPART E OF PART 1068—PLANS FOR SELECTIVE ENFORCEMENT AUDITING

The following tables describe sampling plans for selective enforcement audits, as described in § 1068.420:

TABLE A–1—SAMPLING PLAN CODE LETTER

Projected engine family sales	Code letter [1]	Minimum number of tests		Maximum number of tests
		To pass	To fail	
20 – 50	AA	3	5	20
20 – 99	A	4	6	30
100 – 299	B	5	6	40
300 – 499	C	5	6	50
500 +	D	5	6	60

[1] A manufacturer may optionally use either the sampling plan for code letter ''AA'' or sampling plan for code letter ''A'' for Selective enforcement Audits of engine families with annual sales between 20 and 50 engines. Additionally, the manufacturer may switch between these plans during the audit.

TABLE A–2—SAMPLING PLANS FOR DIFFERENT ENGINE FAMILY SALES VOLUMES

Stage [a]	AA		A		B		C		D	
	Pass #	Fail #	Pass #	Fail #	Pass #	Fail #	Pass #	Fail #	Pass #	Fail #
1.										
2.										
3	0									
4	.....		0							
5	1	5	0		0		0		0	
6	1	6	1	6	1	6	0	6	0	6
7	2	6	1	7	1	7	1	7	1	7
8	2	7	2	7	2	7	2	7	2	8
9	3	7	2	8	2	8	2	8	2	8
10	3	8	3	8	3	8	3	9	3	9
11	4	8	3	8	3	9	3	9	3	9
12	4	9	4	9	4	9	4	10	4	10
13	5	9	5	10	4	10	4	10	4	10
14	5	10	5	10	5	10	5	11	5	11
15	6	10	6	11	5	11	5	11	5	11
16	6	10	6	11	6	12	6	12	6	12
17	7	10	7	12	6	12	6	12	6	12
18	8	10	7	12	7	13	7	13	7	13
19	8	10	8	13	8	13	7	13	7	13

20	9	10	8	13	8	14	8	14	8	14
21			9	14	9	14	8	14	8	14
22			10	14	9	15	9	15	9	15
23			10	15	10	15	10	15	9	15
24			11	15	10	16	10	16	10	16
25			11	16	11	16	11	16	11	16
26			12	16	11	17	11	17	11	17
27			12	17	12	17	12	17	12	17
28			13	17	12	18	12	18	12	18
29			14	17	13	18	13	18	13	19
30			16	17	13	19	13	19	13	19
31					14	19	14	19	14	20
32					14	20	14	20	14	20
33					15	20	15	20	15	21
34					16	21	15	21	15	21
35					16	21	16	21	16	22
36					17	22	16	22	16	22
37					17	22	17	22	17	23
38					18	22	18	23	17	23
39					18	22	18	23	18	24
40					21	22	19	24	18	24
41							19	24	19	25

TABLE A–2—SAMPLING PLANS FOR DIFFERENT ENGINE FAMILY SALES VOLUMES—Continued

Stage [a]	AA		A		B		C		D	
	Pass #	Fail #	Pass #	Fail #	Pass #	Fail #	Pass #	Fail #	Pass #	Fail #
42							20	25	19	26
43							20	25	20	26
44							21	26	21	27
45							21	27	21	27
46							22	27	22	28
47							22	27	22	28
48							23	27	23	29
49							23	27	23	29
50							26	27	24	30
51									24	30
52									25	31
53									25	31
54									26	32
55									26	32
56									27	33
57									27	33
58									28	33
59									28	33
60									32	33

[a] Stage refers to the cumulative number of engines tested.

Subpart F—Reporting Defects and Recalling Engines

§ 1068.501 How do I report engine defects?

(a) *General provisions.* As an engine manufacturer, you must investigate in certain circumstances whether emission-related components are defective and send us reports as specified by this section.

(1) The term emission-related component includes those components listed in Appendix I of this part. For the purposes of this section, complete engines shall also be considered an emissions-related component. It also includes factory settings of emission-related parameters and specifications listed in Appendix II of this part.

(2) For the purposes of this section, defects do not include damage to emission-related components (or maladjustment of parameters) caused by owners improperly maintaining or abusing their engine.

(3) You must track the information specified in paragraph (b)(1) of this section. You are not required to collect additional information other than that specified in paragraph (b)(1) of this section before reaching the threshold for an investigation specified in paragraph (e) of this section.

(4) You may ask us to allow you to use alternate methods for tracking, investigating, reporting, and correcting emission-related defects. In your request, explain and demonstrate why you believe your alternate system will be at least as effective in tracking, identifying, investigating, evaluating, reporting, and correcting potential and actual emissions-related defects as the requirements in this section.

(5) If we determine that emission-related defects result in a substantial number of properly maintained and used engines not conforming to the regulations of this chapter during their useful life, we may order you to conduct a recall of your engines (see § 1068.505).

(6) Send the defect reports and status reports required by this section to the Designated Officer.

(b) *Investigation of possible defects.* If the number of engines that possibly have a defect, as defined by paragraph (b)(1) of this section, exceed the thresholds specified in paragraph (e) of this section, you must conduct an investigation to determine if an emission-related component is actually defective.

(1) You must track warranty claims, parts shipments, and the other information specified in paragraph (b)(1)(iii) of this section. You must classify an engine as possibly having a defective component if any of the following is true:

(i) A warranty claim is submitted for the component, whether this is under your emission-related warranty or any other warranty.

(ii) You ship a replacement component other than for normally scheduled maintenance during the useful life of the engine.

(iii) You receive any other information indicating the component may be defective, such as information from dealers or hot line complaints.

(2) Your investigation must be prompt, thorough, consider all relevant information, follow scientific and engineering principles, and be designed to obtain all the information specified in paragraph (d) of this section.

(3) Your investigation only needs to consider defects that occur within the useful life period, or within five years after the end of the model year, whichever is longer.

(4) You must continue your investigation until you are able to obtain all the information specified for a defect report in paragraph (d) of this section. Send us an updated defect report anytime you have significant additional information.

(5) If a component believed to be defective is used in additional engine families or model years, you must investigate whether the component or part is defective when used in these additional engine families or model years, and include these results as part of your defect report.

(6) If your initial investigation concludes that the number of engines with a defect is fewer than the thresholds specified in paragraph (f) of this section, but other information becomes available that may show that the number of engines with a defect exceeds

these thresholds, then you must resume your investigation. If you resume an investigation, you must include the information from the earlier investigation to determine whether to send a defect report.

(c) *Reporting defects.* You must send us a defect report in either of the following cases:

(1) Your investigation shows that the number of engines with a defect exceeds the thresholds specified in paragraph (f) of this section. Send the defect report within 15 days after the date you identify this number of defective engines.

(2) You know a defective emission-related component exists in a number of engines that exceeds the thresholds specified in paragraph (f) of this section, regardless of how you obtain this information. Send the defect report within 15 days after you learn that the number of defects exceeds one of these thresholds.

(d) *Contents of a defect report.* Include the following information in a defect report:

(1) Your corporate name and a person to contact regarding this defect.

(2) A description of the defect, including a summary of any engineering analyses and associated data, if available.

(3) A description of the engines that may have the defect, including engine families, models, and range of production dates. Note that you must address all model years for the engines, not just the model year for which you triggered the reporting requirement.

(4) An estimate of the number and percentage of each class or category of affected engines that have or may have the defect, and an explanation of how you determined this number.

(5) An estimate of the defect's impact on emissions, with an explanation of how you calculated this estimate and a summary of any emission data demonstrating the impact of the defect, if available.

(6) A description of your plan for addressing the defect or an explanation of your reasons for not believing the defects must be remedied.

(e) *Thresholds for conducting a defect investigation.* Unless the standard-setting part specifies otherwise, you must begin a defect investigation based on the following threshold values:

(1) For engine with rated power under 560 kW:

(i) When the component is a catalytic converter (or other aftertreatment device), if the number of engines in an engine family that may have the defect exceeds 2 percent of the total number of engines in the engine family or 2,000 engines, whichever is less.

(ii) When the emission-related component is anything but a catalytic converter (or other aftertreatment device), if the number of engines in an engine family that may have the defect exceeds 4 percent of the total number of engines in the engine family or 4,000 engines, whichever is less.

(2) For engine with rated power greater than or equal to 560 kW, if the number of engines in an engine family that may have the defect exceeds 1 percent of the total number of engines in the engine family or 5 engines, whichever is greater.

(f) *Thresholds for filing a defect report.* You must send a defect report based on the following threshold values:

(1) For engine with rated power under 560 kW:

(i) When the component is a catalytic converter (or other aftertreatment device), if the number of engines in an engine family that has the defect exceeds 0.125 percent of the total number of engines in the engine family or 125 engines, whichever is less.

(ii) When the emission-related component is anything but a catalytic converter (or other aftertreatment device), if the number of engines in an engine family that has the defect exceeds 0.250 percent of the total number of engines in the engine family or 250 engines, whichever is less.

(2) For engine with rated power greater than or equal to 560 kW, if the number of engines in an engine family that has the defect exceeds 0.5 percent of the total number of engines in the engine family or 2 engines, whichever is greater.

(g) *How to count defects.* In most cases, you may track defects separately for each model year and engine family. For families with annual U.S.-directed production volumes under

5,000 engines, you may apply the percentage thresholds in paragraphs (e) and (f) of this section on the basis of multiple model years, for engines using the same emission-related components. To determine whether you exceed the investigation threshold in paragraph (e) of this section, count defects that you correct before they reach the ultimate purchaser. Do not count these corrected defects to determine whether you exceed the reporting threshold in paragraph (f) of this section.

(h) *Status reports.* You must send us a mid-year or end-of-year status report if you concluded an investigation during the previous six months without filing a defect report or if you have an unresolved investigation at the end of the six-month period. Include the information specified in paragraph (c) of this section, or explain why the information is not relevant. Send these status reports no later than June 30 and December 31 of each year.

(i) *Future production.* If you identify a design or manufacturing defect that prevents engines from meeting the requirements of this part, you must correct the defect as soon as possible for any future production for engines in every family affected by the defect. This applies without regard to whether you are required to conduct a defect investigation or submit a defect report under this section.

§ 1068.505 How does the recall program work?

(a) If we make a determination that a substantial number of properly maintained and used engines do not conform to the regulations of this chapter during their useful life, you must submit a plan to remedy the nonconformity of your engines. We will notify you of our determination in writing. Our notice will identify the class or category of engines affected and describe how we reached our conclusion. If this happens, you must meet the requirements and follow the instructions in this subpart. You must remedy at your expense noncompliant engines that have been properly maintained and used. You may not transfer this expense to a dealer or equipment manufacturer through a franchise or other agreement.

(b) You may ask for a hearing if you disagree with our determination (see subpart G of this part).

(c) Unless we withdraw the determination of noncompliance, you must respond to it by sending a remedial plan to the Designated Officer by the later of these two deadlines:

(1) Within 60 days after we notify you.

(2) Within 60 days after a hearing.

(d) Once you have sold an engine to the ultimate purchaser, we may inspect or test the engine only if he or she permits it, or if state or local inspection programs separately provide for it.

(e) You may ask us to allow you to conduct your recall differently than specified in this subpart, consistent with section 207(c) of the Act.

§ 1068.510 How do I prepare and apply my remedial plan?

(a) In your remedial plan, describe all of the following:

(1) The class or category of engines to be recalled, including the number of engines involved and the model year or other information needed to identify the engines.

(2) The modifications, alterations, repairs, corrections, adjustments, or other changes you will make to correct the affected engines.

(3) A brief description of the studies, tests, and data that support the effectiveness of the remedy you propose to use.

(4) The instructions you will send to those who will repair the engines under the remedial plan.

(5) How you will determine the owners' names and addresses.

(6) How you will notify owners; include copies of any notification letters.

(7) The proper maintenance or use you will specify, if any, as a condition to be eligible for repair under the remedial plan. Describe how owners should show they meet your conditions.

(8) The steps owners must take for you to do the repair. You may set a date or a range of dates, specify the amount of time you need, and designate certain facilities to do the repairs.

(9) Which company (or group) you will assign to do or manage the repairs.

(10) If your employees or authorized warranty agents will not be doing the work, state who will and say they can do it.

(11) How you will ensure an adequate and timely supply of parts.

(12) The effect of proposed changes on fuel consumption, driveability, and safety of the engines you will recall; include a brief summary of the information supporting these conclusions.

(13) How you intend to label the engines you repair and where you will place the label on the engine (see § 1068.515).

(b) We may require you to add information to your remedial plan.

(c) We may require you to test the proposed repair to show it will remedy the noncompliance.

(d) Use all reasonable means to locate owners. We may require you to use government or commercial registration lists to get owners' names and addresses, so your notice will be effective.

(e) The maintenance or use that you specify as a condition for eligibility under the remedial plan may include only things you can show would cause noncompliance. Do not require use of a component or service identified by brand, trade, or corporate name, unless we approved this approach with your original certificate of conformity. Also, do not place conditions on who maintained the engine.

(f) We may require you to adjust your repair plan if we determine owners would be without their engines or equipment for an unreasonably long time.

(g) We will tell you in writing within 15 days of receiving your remedial plan whether we have approved or disapproved it. We will explain our reasons for any disapproval.

(h) Begin notifying owners within 15 days after we approve your remedial plan. If we hold a hearing, but do not change our position about the noncompliance, you must begin notifying owners within 60 days after we complete the hearing, unless we specify otherwise.

§ 1068.515 How do I mark or label repaired engines?

(a) Attach a label to each engine you repair under the remedial plan. At your discretion, you may label or mark engines you inspect but do not repair.

(b) Make the label from a durable material suitable for its planned location. Make sure no one can remove the label without destroying or defacing it.

(c) On the label, designate the specific recall campaign and state where you repaired or inspected the engine.

(d) We may waive or modify the labeling requirements if we determine they are overly burdensome.

§ 1068.520 How do I notify affected owners?

(a) Notify owners by first class mail, unless we say otherwise. We may require you to use certified mail. Include the following in your notice:

(1) State: ''The U.S. Environmental Protection Agency has determined that your engine may be emitting pollutants in excess of the Federal emission standards, as defined in Title 40 of the Code of Federal Regulations. These emission standards were established to protect the public health or welfare from air pollution''.

(2) State that you (or someone you designate) will repair these engines at your expense.

(3) If we approved maintenance and use conditions in your remedial plan, state that you will make these repairs only if owners show their engines meet the conditions for proper maintenance and use. Describe these conditions and how owners should prove their engines are eligible for repair.

(4) Describe the components your repair will affect and say generally how you will repair the engines.

(5) State that the engine, if not repaired, may fail an emission inspection test if state or local law requires one.

(6) Describe any adverse effects on its performance or driveability that would be caused by not repairing the engine.

(7) Describe any adverse effects on the functions of other engine components that would be caused by not repairing the engine.

(8) Specify the date you will start the repairs, the amount of time you will need to do them, and where you will do

them. Include any other information owners may need to know.

(9) Include a self-addressed card that owners can mail back if they have sold the engine (or equipment in which the engine is installed); include a space for owners to write the name and address of a buyer.

(10) State that owners should call you at a phone number you give to report any difficulty in obtaining repairs.

(11) State: ''To ensure your full protection under the emission warranty on your engine by federal law, and your right to participate in future recalls, we recommend you have your engine serviced as soon as possible. We may consider your not servicing it to be improper maintenance''.

(b) We may require you to add information to your notice or to send more notices.

(c) You may not in any communication with owners or dealers say or imply that your noncompliance does not exist or that it will not degrade air quality.

§ 1068.525 What records must I send to EPA?

(a) Send us a copy of all communications related to the remedial plan you sent to dealers and others doing the repairs. Mail or e-mail us the information at the same time you send it to others.

(b) From the time you begin to notify owners, send us a report within 25 days of the end of each calendar quarter. Send reports for six consecutive quarters or until all the engines are inspected, whichever comes first. In these reports, identify the following:

(1) The range of dates you needed to notify owners.

(2) The total number of notices sent.

(3) The number of engines you estimate fall under the remedial plan (explain how you determined this number).

(4) The cumulative number of engines you inspected under the remedial plan.

(5) The cumulative number of these engines you found needed the specified repair.

(6) The cumulative number of these engines you have repaired.

(7) The cumulative number of engines you determined to be unavailable due to exportation, theft, retirement, or other reasons (specify).

(8) The cumulative number of engines you disqualified for not being properly maintained or used.

(c) If your estimated number of engines falling under the remedial plan changes, change the estimate in your next report and add an explanation for the change.

(d) We may ask for more information.

(e) We may waive reporting requirements or adjust the reporting schedule.

(f) If anyone asks to see the information in your reports, we will follow the provisions of § 1068.10 for handling confidential information.

§ 1068.530 What records must I keep?

We may review your records at any time, so it is important that you keep required information readily available. Keep records associated with your recall campaign for three years after you complete your remedial plan. Organize and maintain your records as described in this section.

(a) Keep a paper copy of the written reports described in § 1068.525.

(b) Keep a record of the names and addresses of owners you notified. For each engine, state whether you did any of the following:

(1) Inspected the engine.

(2) Disqualified the engine for not being properly maintained or used.

(3) Completed the prescribed repairs.

(c) You may keep the records in paragraph (b) of this section in any form we can inspect, including computer databases.

§ 1068.535 How can I do a voluntary recall for emission-related problems?

If we have made a determination that a substantial number of properly maintained and used engines do not conform to the regulations of this chapter during their useful life, you may not use a voluntary recall or other alternate means to meet your obligation to remedy the noncompliance. Thus, this section only applies where you learn that your engine family does not meet the requirements of this chapter and we have not made such a determination.

(a) To do a voluntary recall under this section, first send the Designated

Officer a plan, following the guidelines in § 1068.510. Within 15 days, we will send you our comments on your plan.

(b) Once we approve your plan, start notifying owners and carrying out the specified repairs.

(c) From the time you start the recall campaign, send us a report within 25 days of the end of each calendar quarter, following the guidelines in § 1068.525(b). Send reports for six consecutive quarters or until all the engines are inspected, whichever comes first.

(d) Keep your reports and the supporting information as described in § 1068.530.

§ 1068.540 What terms do I need to know for this subpart?

The following terms apply to this subpart:

Days means calendar days.

Owner means someone who owns an engine affected by a remedial plan or someone who owns a piece of equipment that has one of these engines.

Subpart G—Hearings

§ 1068.601 What are the procedures for hearings?

If we agree to hold a hearing related to our decision to order a recall under § 1068.505, we will hold the hearing according to the provisions of 40 CFR 85.1807. For any other issues, you may request an informal hearing, as described in 40 CFR 86.1853–01.

APPENDIX I TO PART 1068—EMISSION-RELATED COMPONENTS

This appendix specifies emission-related components that we refer to for describing such things as emission-related defects or requirements related to rebuilding engines.

I. Emission-related components include any engine parts related to the following systems:
  1. Air-induction system.
  2. Fuel system.
  3. Ignition system.
  4. Exhaust gas recirculation systems.

II. The following parts are also considered emission-related components:
  1. Aftertreatment devices.
  2. Crankcase ventilation valves.
  3. Sensors.
  4. Electronic control units.

III. Emission-related components also include any other part whose only purpose is to reduce emissions or whose failure will increase emissions without significantly degrading engine performance.

IV. We also consider the emission-control information label to be an emission-related component.

APPENDIX II TO PART 1068—EMISSION-RELATED PARAMETERS AND SPECIFICATIONS

This appendix specifies emission-related parameters and specifications that we refer to for describing such things as emission-related defects or requirements related to rebuilding engines.

I. Basic Engine Parameters—Reciprocating Engines.
  1. Compression ratio.
  2. Type of air aspiration (natural, Roots-blown, supercharged, turbocharged).
  3. Valves (intake and exhaust).
  a. Head diameter dimension.
  b. Valve lifter or actuator type and valve lash dimension.
  4. Camshaft timing.
  a. Valve opening—intake exhaust (degrees from top-dead center or bottom-dead center).
  b. Valve closing—intake exhaust (degrees from top-dead center or bottom-dead center).
  c. Valve overlap (degrees).
  5. Ports—two stroke engines (intake and/or exhaust).
  a. Flow area.
  b. Opening timing (degrees from top-dead center or bottom-dead center).
  c. Closing timing (degrees from top-dead center or bottom-dead center).

II. Intake Air System.
  1. Roots blower/supercharger/turbocharger calibration.
  2. Charge air cooling.
  a. Type (air-to-air; air-to-liquid).
  b. Type of liquid cooling (engine coolant, dedicated cooling system).
  c. Performance.
  3. Temperature control system calibration.
  4. Maximum allowable inlet air restriction.

III. Fuel System.
  1. General.
  a. Engine idle speed.
  b. Engine idle mixture.
  2. Carburetion.
  a. Air-fuel flow calibration.
  b. Idle mixture.
  c. Transient enrichment system calibration.
  d. Starting enrichment system calibration.
  e. Altitude compensation system calibration.
  f. Hot idle compensation system calibration.
  3. Fuel injection for spark-ignition engines.
  a. Control parameters and calibrations.

b. Idle mixture.
c. Fuel shutoff system calibration.
d. Starting enrichment system calibration.
e. Transient enrichment system calibration.
f. Air-fuel flow calibration.
g. Altitude compensation system calibration.
h. Operating pressure(s).
i. Injector timing calibration.
4. Fuel injection for compression-ignition engines.
a. Control parameters and calibrations.
b. Transient enrichment system calibration.
c. Air-fuel flow calibration.
d. Altitude compensation system calibration.
e. Operating pressure(s).
f. Injector timing calibration.

IV. Ignition System for Spark-ignition Engines.
1. Control parameters and calibration.
2. Initial timing setting.
3. Dwell setting.
4. Altitude compensation system calibration.
5. Spark plug voltage.

V. Engine Cooling System—thermostat calibration.

VI. Exhaust System—maximum allowable back pressure.

VII. System for Controlling Exhaust Emissions.
1. Air injection system.
a. Control parameters and calibrations.
b. Pump flow rate.
2. EGR system.
a. Control parameters and calibrations.
b. EGR valve flow calibration.
3. Catalytic converter system.
a. Active surface area.
b. Volume of catalyst.
c. Conversion efficiency.
4. Backpressure.

VIII. System for Controlling Crankcase Emissions.
1. Control parameters and calibrations.
2. Valve calibrations.

IX. Auxiliary Emission Control Devices (AECD).
1. Control parameters and calibrations.
2. Component calibration(s).

X. System for Controlling Evaporative Emissions.
1. Control parameters and calibrations.
2. Fuel tank.
a. Volume.
b. Pressure and vacuum relief settings.

XI. Warning Systems Related to Emission Controls.
1. Control parameters and calibrations.
2. Component calibrations.

CHAPTER IV—ENVIRONMENTAL PROTECTION AGENCY AND DEPARTMENT OF JUSTICE

SUBCHAPTER A—ACCIDENTAL RELEASE PREVENTION REQUIREMENTS; RISK MANAGEMENT PROGRAMS UNDER THE CLEAN AIR ACT SECTION 112(r)(7); DISTRIBUTION OF OFF-SITE CONSEQUENCE ANALYSIS INFORMATION

Part		*Page*
1400	Distribution of off-site consequence analysis information	627

SUBCHAPTER A—ACCIDENTAL RELEASE PREVENTION REQUIREMENTS; RISK MANAGEMENT PROGRAMS UNDER THE CLEAN AIR ACT SECTION 112(r)(7); DISTRIBUTION OF OFF-SITE CONSEQUENCE ANALYSIS INFORMATION

PART 1400—DISTRIBUTION OF OFF-SITE CONSEQUENCE ANALYSIS INFORMATION

Subpart A—General

Sec.
1400.1 Purpose.
1400.2 Definitions.

Subpart B—Public Access

1400.3 Public access to paper copies of off-site consequence analysis information.
1400.4 Vulnerable zone indicator system.
1400.5 Internet access to certain off-site consequence analysis data elements.
1400.6 Enhanced local access.

Subpart C—Access to Off-Site Consequence Analysis Information by Government Officials

1400.7 In general.
1400.8 Access to off-site consequence analysis information by Federal Government officials.
1400.9 Access to off-site consequence analysis information by State and local government officials.

Subpart D—Other Provisions

1400.10 Limitation on public dissemination.
1400.11 Limitation on dissemination to State and local government officials.
1400.12 Qualified researchers.
1400.13 Read-only database.

AUTHORITY: 42 U.S.C. 7412(r)(7)(H)(ii).

SOURCE: 65 FR 48131, Aug. 4, 2000, unless otherwise noted.

Subpart A—General

§ 1400.1 Purpose.

Stationary sources subject to the Chemical Accident Prevention Provisions of 40 CFR part 68 are required to analyze the potential harm to public health and welfare of hypothetical chemical accidents and submit the results of their analyses to the U.S. Environmental Protection Agency as part of risk management plans. This part governs access by the public and by government officials to the portions of risk management plans containing the results of those analyses and certain related materials. This part also restricts dissemination of that information by government officials.

§ 1400.2 Definitions.

For the purposes of this part:

(a) *Accidental release* means an unanticipated emission of a regulated substance or other extremely hazardous substance into the ambient air from a stationary source.

(b) *Administrator* means the Administrator of the U.S. Environmental Protection Agency or his or her designated representative.

(c) *Attorney General* means the Attorney General of the United States or his or her designated representative.

(d) *Federal government official* means—

(1) An officer or employee of the United States; and

(2) An officer or employee of an agent or contractor of the Federal government.

(e) *State or local government official* means—

(1) An officer or employee of a State or local government;

(2) An officer or employee of an agent or contractor of a State or local government;

(3) An individual affiliated with an entity that has been given, by a state or local government, responsibility for preventing, planning for, or responding to accidental releases, such as a member of a Local Emergency Planning Committee (LEPC) or a State Emergency Response Commission (SERC), or a paid or volunteer member of a fire or police department; or

(4) An officer or employee or an agent or contractor of an entity described in paragraph (e)(3) of this section.

(f) *LEPC* means a Local Emergency Planning Committee created under the Emergency Planning and Community Right-to-Know Act, 42 U.S.C. 11001 *et seq.*

(g) *Member of the public or person* means an individual.

(h) *Official use* means an action of a Federal, State, or local government agency or an entity described in paragraph (e)(3) of this section intended to carry out a function relevant to preventing, planning for, or responding to accidental releases.

(i) *Off-site consequence analysis (OCA) information* means sections 2 through 5 of a risk management plan (consisting of an evaluation of one or more worst-case release scenarios or alternative release scenarios) for an identified facility and any electronic database created by the Administrator from those sections.

(j) *Off-site consequence analysis (OCA) data elements* means the results of the off-site consequence analysis conducted by a stationary source pursuant to 40 CFR part 68, subpart B, when presented in a format different than sections 2 through 5 of a risk management plan or any Administrator-created electronic database.

(k) *Off-site consequence analysis (OCA) rankings* means any statewide or national rankings of identified stationary sources derived from OCA information.

(l) *Qualified researcher* means a researcher who receives OCA information pursuant to 42 U.S.C. 7412(r)(7)(H)(vii).

(m) *Related local government agencies* means local government agencies, such as police, fire, emergency management, and planning departments, that are involved in chemical emergency planning, prevention, or response.

(n) *Related state government agencies* means State government agencies, such as emergency management, environmental protection, health, and natural resources departments, that are involved in chemical emergency planning, prevention, or response.

(o) *Risk management plan (RMP)* means a risk management plan submitted to the Administrator by an owner or operator of a stationary source pursuant to 40 CFR part 68, subpart G.

(p) *SERC* means a State Emergency Response Commission created under the Emergency Planning and Community Right-to-Know Act, 42 U.S.C. 11001 *et seq.*

(q) *State* has the same meaning as provided in 42 U.S.C. 7602(d) (a state, the District of Columbia, the Commonwealth of Puerto Rico, the Virgin Islands, Guam, American Samoa, and the Commonwealth of the Northern Mariana Islands).

(r) *Stationary source* has the same meaning as provided in 40 CFR part 68 subpart A, § 68.3.

(s) *Vulnerable zone* means the geographical area that could be affected by a worst-case or alternative scenario release from a stationary source, as indicated by the off-site consequence analysis reported by the stationary source in its risk management plan pursuant to the applicable requirements of 40 CFR Part 68. It is defined as a circle, the center of which is the stationary source and the radius of which is the ''distance-to-endpoint,'' or the distance a toxic or flammable cloud, overpressure, or radiant heat would travel after being released and before dissipating to the point that it no longer threatens serious short-term harm to people or the environment.

Subpart B—Public Access

§ 1400.3 Public access to paper copies of off-site consequence analysis information.

(a) *General.* The Administrator and the Attorney General shall ensure that any member of the public has access to a paper copy of OCA information in the manner prescribed by this section.

(b) *Reading-room access.* Paper copies of OCA information shall be available in at least 50 reading rooms geographically distributed across the United States and its territories. The reading rooms shall allow any person to read, but not remove or mechanically reproduce, a paper copy of OCA information, in accordance with paragraphs (c) through (g) of this section and procedures established by the Administrator and Attorney General.

(c) *Limited number.* Any person shall be provided with access to a paper copy of the OCA information for up to 10 stationary sources located anywhere in the country, without geographical restriction, in a calendar month.

(d) *Additional access.* Any person also shall be provided with access to a paper

copy of the OCA information for stationary sources located in the jurisdiction of the LEPC where the person lives or works and for any other stationary source that has a vulnerable zone that extends into that LEPC's jurisdiction.

(e) *Personal identification for access to OCA information without geographical restriction.* Reading rooms established under this section shall provide a person with access to a paper copy of OCA information under paragraph (c) of this section only after a reading room representative has

(1) Ascertained the person's identity by viewing photo identification issued by a Federal, State, or local government agency to the person; and

(2) Obtained the person's signature on a sign-in sheet and a certification that the person has not received access to OCA information for more than 10 stationary sources for that calendar month.

(f) *Personal identification for access to local OCA information.* Reading rooms established under this section shall provide a person with access to a paper copy of OCA information under paragraph (d) of this section only after a reading room representative has

(1) Ascertained where the person lives or works by viewing appropriate documentation; and

(2) Obtained the person's signature on a sign-in sheet.

(g) *Record keeping.* Reading room personnel shall keep records of reading room use and certifications in accordance with procedures established by the Administrator and the Attorney General. These records shall be retained for no more than three years. Federal reading rooms will not index or otherwise manipulate the sign-in sheets according to individuals' names, except in accordance with the Privacy Act.

§ 1400.4 Vulnerable zone indicator system.

(a) *In general.* The Administrator shall provide access to a computer-based indicator that shall inform any person located in any state whether an address specified by that person might be within the vulnerable zone of one or more stationary sources, according to the data reported in RMPs. The indicator also shall provide information about how to obtain further information.

(b) *Methods of access.* The indicator shall be available on the Internet or by request made by telephone or by mail to the Administrator to operate the indicator for an address specified by the requestor. SERCs, LEPCs, and other related state or local government agencies are authorized and encouraged to operate the indicator as well.

§ 1400.5 Internet access to certain offsite consequence analysis data elements.

The Administrator shall include only the following OCA data elements in the risk management plan database available on the Internet:

(a) The concentration of the chemical (RMP Sections 2.1.b; 3.1.b);

(b) The physical state of the chemical (RMP Sections 2.2; 3.2);

(c) The statistical model used (RMP Sections 2.3; 3.3; 4.2; 5.2);

(d) The endpoint used for flammables in the worst-case scenario (RMP Section 4.5);

(e) The duration of the chemical release for the worst-case scenario (RMP Section 2.7);

(f) The wind speed during the chemical release (RMP Sections 2.8; 3.8);

(g) The atmospheric stability (RMP Sections 2.9; 3.9);

(h) The topography of the surrounding area (RMP Sections 2.10; 3.10);

(i) The passive mitigation systems considered (RMP Sections 2.15; 3.15; 4.10; 5.10); and

(j) The active mitigation systems considered (RMP Sections 3.16; 5.11).

§ 1400.6 Enhanced local access.

(a) *OCA data elements.* Consistent with 42 U.S.C. 7412(r)(7)(H)(xii)(II), members of LEPCs and SERCs, and any other State or local government official, may convey to the public OCA data elements orally or in writing, as long as the data elements are not conveyed in the format of sections 2 through 5 of an RMP or any electronic database developed by the Administrator from those sections. Disseminating OCA data elements to the public

in a manner consistent with this provision does not violate 42 U.S.C. 7412(r)(7)(H)(v) and is not punishable under federal law.

(b) *OCA information.* (1) LEPCs and related local government agencies are authorized and encouraged to allow any member of the public to read, but not remove or mechanically copy, a paper copy of the OCA sections of RMPs (i.e., sections 2 through 5) for stationary sources located within the jurisdiction of the LEPC and for any other stationary source that has a vulnerable zone that extends into that jurisdiction.

(2) LEPCs and related local government agencies that provide read-only access to the OCA sections of RMPs under this paragraph (b) are not required to limit the number of stationary sources for which a person can gain access, ascertain a person's identity or place of residence or work, or keep records of public access provided.

(3) SERCs and related state government agencies are authorized and encouraged to allow any person to read, but not remove or mechanically copy, a paper copy of the OCA sections of RMPs for the same stationary sources that the LEPC in whose jurisdiction the person lives or works would be authorized to make available to that person under paragraph (b)(1) of this section.

(4) Any LEPC, SERC, or related local or State government agency that allows a person to read the OCA sections of RMPs in a manner consistent with this paragraph (b) shall not be in violation of 42 U.S.C. 7412(r)(7)(H)(v) or any other provision of federal law.

Subpart C—Access to Off-Site Consequence Analysis Information by Government Officials.

§ 1400.7 In general.

The Administrator shall provide OCA information to government officials as provided in this subpart. Any OCA information provided to government officials shall be accompanied by a copy of the notice prescribed by 42 U.S.C. 7412(r)(7)(H)(vi).

§ 1400.8 Access to off-site consequence analysis information by Federal government officials.

The Administrator shall provide any Federal government official with the OCA information requested by the official for official use. The Administrator shall provide the OCA information to the official in electronic form, unless the official specifically requests the information in paper form. The Administrator may charge a fee to cover the cost of copying OCA information in paper form.

§ 1400.9 Access to off-site consequence analysis information by State and local government officials.

(a) The Administrator shall make available to any State or local government official for official use the OCA information for stationary sources located in the official's state.

(b) The Administrator also shall make available to any State or local government official for official use the OCA information for stationary sources not located in the official's state, at the request of the official.

(c) The Administrator shall provide OCA information to a State or local government official in electronic form, unless the official specifically requests the information in paper form. The Administrator may charge a fee to cover the cost of copying OCA information in paper form.

(d) Any State or local government official is authorized to provide, for official use, OCA information relating to stationary sources located in the official's state to other State or local government officials in that state and to State or local government officials in a contiguous state.

Subpart D—Other Provisions

§ 1400.10 Limitation on public dissemination.

Except as authorized by this part and by 42 U.S.C. 7412(r)(7)(H)(v)(III), Federal, State, and local government officials, and qualified researchers are prohibited from disseminating OCA information and OCA rankings to the public. Violation of this provision subjects the violator to criminal liability as provided in 42 U.S.C. 7412(r)(7)(H)(v)

and civil liability as provided in 42 U.S.C. 7413.

§ 1400.11 Limitation on dissemination to State and local government officials.

Except as authorized by this part and by 42 U.S.C. 7412(r)(7)(H)(v)(III), Federal, State, and local government officials, and qualified researchers are prohibited from disseminating OCA information to State and local government officials. Violation of this provision subjects the violator to civil liability as provided in 42 U.S.C. 7413.

§ 1400.12 Qualified researchers.

The Administrator is authorized to provide OCA information, including facility identification, to qualified researchers pursuant to a system developed and implemented under 42 U.S.C. 7412(r)(7)(H)(vii), in consultation with the Attorney General.

§ 1400.13 Read-only database.

The Administrator is authorized to establish, pursuant to 42 U.S.C. 7412(r)(7)(H)(viii), an information technology system that makes available to the public off-site consequence analysis information by means of a central database under the control of the Federal government that contains information that users may read, but that provides no means by which an electronic or mechanical copy of the information may be made.

CHAPTER V—COUNCIL ON ENVIRONMENTAL QUALITY

Part		*Page*
1500	Purpose, policy, and mandate	635
1501	NEPA and agency planning	637
1502	Environmental impact statement	641
1503	Commenting	648
1504	Predecision referrals to the Council of proposed Federal actions determined to be environmentally unsatisfactory	649
1505	NEPA and agency decisionmaking	651
1506	Other requirements of NEPA	652
1507	Agency compliance	657
1508	Terminology and index	659
1515	Freedom of Information Act procedures	664
1516	Privacy Act implementation	668
1517	Public meeting procedures of the Council on Environmental Quality	669
1518	Office of Environmental Quality Management Fund	673
	Index to parts 1500 through 1508	676

PART 1500—PURPOSE, POLICY, AND MANDATE

Sec.
1500.1 Purpose.
1500.2 Policy.
1500.3 Mandate.
1500.4 Reducing paperwork.
1500.5 Reducing delay.
1500.6 Agency authority.

AUTHORITY: NEPA, the Environmental Quality Improvement Act of 1970, as amended (42 U.S.C. 4371 *et seq.*), sec. 309 of the Clean Air Act, as amended (42 U.S.C. 7609) and E.O. 11514, Mar. 5, 1970, as amended by E.O. 11991, May 24, 1977).

SOURCE: 43 FR 55990, Nov. 28, 1978, unless otherwise noted.

§ 1500.1 Purpose.

(a) The National Environmental Policy Act (NEPA) is our basic national charter for protection of the environment. It establishes policy, sets goals (section 101), and provides means (section 102) for carrying out the policy. Section 102(2) contains ''action-forcing'' provisions to make sure that federal agencies act according to the letter and spirit of the Act. The regulations that follow implement section 102(2). Their purpose is to tell federal agencies what they must do to comply with the procedures and achieve the goals of the Act. The President, the federal agencies, and the courts share responsibility for enforcing the Act so as to achieve the substantive requirements of section 101.

(b) NEPA procedures must insure that environmental information is available to public officials and citizens before decisions are made and before actions are taken. The information must be of high quality. Accurate scientific analysis, expert agency comments, and public scrutiny are essential to implementing NEPA. Most important, NEPA documents must concentrate on the issues that are truly significant to the action in question, rather than amassing needless detail.

(c) Ultimately, of course, it is not better documents but better decisions that count. NEPA's purpose is not to generate paperwork—even excellent paperwork—but to foster excellent action. The NEPA process is intended to help public officials make decisions that are based on understanding of environmental consequences, and take actions that protect, restore, and enhance the environment. These regulations provide the direction to achieve this purpose.

§ 1500.2 Policy.

Federal agencies shall to the fullest extent possible:

(a) Interpret and administer the policies, regulations, and public laws of the United States in accordance with the policies set forth in the Act and in these regulations.

(b) Implement procedures to make the NEPA process more useful to decisionmakers and the public; to reduce paperwork and the accumulation of extraneous background data; and to emphasize real environmental issues and alternatives. Environmental impact statements shall be concise, clear, and to the point, and shall be supported by evidence that agencies have made the necessary environmental analyses.

(c) Integrate the requirements of NEPA with other planning and environmental review procedures required by law or by agency practice so that all such procedures run concurrently rather than consecutively.

(d) Encourage and facilitate public involvement in decisions which affect the quality of the human environment.

(e) Use the NEPA process to identify and assess the reasonable alternatives to proposed actions that will avoid or minimize adverse effects of these actions upon the quality of the human environment.

(f) Use all practicable means, consistent with the requirements of the Act and other essential considerations of national policy, to restore and enhance the quality of the human environment and avoid or minimize any possible adverse effects of their actions upon the quality of the human environment.

§ 1500.3 Mandate.

Parts 1500 through 1508 of this title provide regulations applicable to and binding on all Federal agencies for implementing the procedural provisions of the National Environmental Policy Act of 1969, as amended (Pub. L. 91–190, 42 U.S.C. 4321 *et seq.*) (NEPA or the Act)

except where compliance would be inconsistent with other statutory requirements. These regulations are issued pursuant to NEPA, the Environmental Quality Improvement Act of 1970, as amended (42 U.S.C. 4371 *et seq.*) section 309 of the Clean Air Act, as amended (42 U.S.C. 7609) and Executive Order 11514, Protection and Enhancement of Environmental Quality (March 5, 1970, as amended by Executive Order 11991, May 24, 1977). These regulations, unlike the predecessor guidelines, are not confined to sec. 102(2)(C) (environmental impact statements). The regulations apply to the whole of section 102(2). The provisions of the Act and of these regulations must be read together as a whole in order to comply with the spirit and letter of the law. It is the Council's intention that judicial review of agency compliance with these regulations not occur before an agency has filed the final environmental impact statement, or has made a final finding of no significant impact (when such a finding will result in action affecting the environment), or takes action that will result in irreparable injury. Furthermore, it is the Council's intention that any trivial violation of these regulations not give rise to any independent cause of action.

§ 1500.4 Reducing paperwork.

Agencies shall reduce excessive paperwork by:

(a) Reducing the length of environmental impact statements (§ 1502.2(c)), by means such as setting appropriate page limits (§§ 1501.7(b)(1) and 1502.7).

(b) Preparing analytic rather than encyclopedic environmental impact statements (§ 1502.2(a)).

(c) Discussing only briefly issues other than significant ones (§ 1502.2(b)).

(d) Writing environmental impact statements in plain language (§ 1502.8).

(e) Following a clear format for environmental impact statements (§ 1502.10).

(f) Emphasizing the portions of the environmental impact statement that are useful to decisionmakers and the public (§§ 1502.14 and 1502.15) and reducing emphasis on background material (§ 1502.16).

(g) Using the scoping process, not only to identify significant environmental issues deserving of study, but also to deemphasize insignificant issues, narrowing the scope of the environmental impact statement process accordingly (§ 1501.7).

(h) Summarizing the environmental impact statement (§ 1502.12) and circulating the summary instead of the entire environmental impact statement if the latter is unusually long (§ 1502.19).

(i) Using program, policy, or plan environmental impact statements and tiering from statements of broad scope to those of narrower scope, to eliminate repetitive discussions of the same issues (§§ 1502.4 and 1502.20).

(j) Incorporating by reference (§ 1502.21).

(k) Integrating NEPA requirements with other environmental review and consultation requirements (§ 1502.25).

(l) Requiring comments to be as specific as possible (§ 1503.3).

(m) Attaching and circulating only changes to the draft environmental impact statement, rather than rewriting and circulating the entire statement when changes are minor (§ 1503.4(c)).

(n) Eliminating duplication with State and local procedures, by providing for joint preparation (§ 1506.2), and with other Federal procedures, by providing that an agency may adopt appropriate environmental documents prepared by another agency (§ 1506.3).

(o) Combining environmental documents with other documents (§ 1506.4).

(p) Using categorical exclusions to define categories of actions which do not individually or cumulatively have a significant effect on the human environment and which are therefore exempt from requirements to prepare an environmental impact statement (§ 1508.4).

(q) Using a finding of no significant impact when an action not otherwise excluded will not have a significant effect on the human environment and is therefore exempt from requirements to prepare an environmental impact statement (§ 1508.13).

[43 FR 55990, Nov. 29, 1978; 44 FR 873, Jan. 3, 1979]

§ 1500.5 Reducing delay.

Agencies shall reduce delay by:

(a) Integrating the NEPA process into early planning (§ 1501.2).

(b) Emphasizing interagency cooperation before the environmental impact statement is prepared, rather than submission of adversary comments on a completed document (§ 1501.6).

(c) Insuring the swift and fair resolution of lead agency disputes (§ 1501.5).

(d) Using the scoping process for an early identification of what are and what are not the real issues (§ 1501.7).

(e) Establishing appropriate time limits for the environmental impact statement process (§§ 1501.7(b)(2) and 1501.8).

(f) Preparing environmental impact statements early in the process (§ 1502.5).

(g) Integrating NEPA requirements with other environmental review and consultation requirements (§ 1502.25).

(h) Eliminating duplication with State and local procedures by providing for joint preparation (§ 1506.2) and with other Federal procedures by providing that an agency may adopt appropriate environmental documents prepared by another agency (§ 1506.3).

(i) Combining environmental documents with other documents (§ 1506.4).

(j) Using accelerated procedures for proposals for legislation (§ 1506.8).

(k) Using categorical exclusions to define categories of actions which do not individually or cumulatively have a significant effect on the human environment (§ 1508.4) and which are therefore exempt from requirements to prepare an environmental impact statement.

(l) Using a finding of no significant impact when an action not otherwise excluded will not have a significant effect on the human environment (§ 1508.13) and is therefore exempt from requirements to prepare an environmental impact statement.

§ 1500.6 Agency authority.

Each agency shall interpret the provisions of the Act as a supplement to its existing authority and as a mandate to view traditional policies and missions in the light of the Act's national environmental objectives. Agencies shall review their policies, procedures, and regulations accordingly and revise them as necessary to insure full compliance with the purposes and provisions of the Act. The phrase ''to the fullest extent possible'' in section 102 means that each agency of the Federal Government shall comply with that section unless existing law applicable to the agency's operations expressly prohibits or makes compliance impossible.

PART 1501—NEPA AND AGENCY PLANNING

Sec.

1501.1 Purpose.
1501.2 Apply NEPA early in the process.
1501.3 When to prepare an environmental assessment.
1501.4 Whether to prepare an environmental impact statement.
1501.5 Lead agencies.
1501.6 Cooperating agencies.
1501.7 Scoping.
1501.8 Time limits.

AUTHORITY: NEPA, the Environmental Quality Improvement Act of 1970, as amended (42 U.S.C. 4371 *et seq.*), sec. 309 of the Clean Air Act, as amended (42 U.S.C. 7609, and E.O. 11514 (Mar. 5, 1970, as amended by E.O. 11991, May 24, 1977).

SOURCE: 43 FR 55992, Nov. 29, 1978, unless otherwise noted.

§ 1501.1 Purpose.

The purposes of this part include:

(a) Integrating the NEPA process into early planning to insure appropriate consideration of NEPA's policies and to eliminate delay.

(b) Emphasizing cooperative consultation among agencies before the environmental impact statement is prepared rather than submission of adversary comments on a completed document.

(c) Providing for the swift and fair resolution of lead agency disputes.

(d) Identifying at an early stage the significant environmental issues deserving of study and deemphasizing insignificant issues, narrowing the scope of the environmental impact statement accordingly.

(e) Providing a mechanism for putting appropriate time limits on the environmental impact statement process.

§ 1501.2 Apply NEPA early in the process.

Agencies shall integrate the NEPA process with other planning at the earliest possible time to insure that planning and decisions reflect environmental values, to avoid delays later in the process, and to head off potential conflicts. Each agency shall:

(a) Comply with the mandate of section 102(2)(A) to ''utilize a systematic, interdisciplinary approach which will insure the integrated use of the natural and social sciences and the environmental design arts in planning and in decisionmaking which may have an impact on man's environment,'' as specified by § 1507.2.

(b) Identify environmental effects and values in adequate detail so they can be compared to economic and technical analyses. Environmental documents and appropriate analyses shall be circulated and reviewed at the same time as other planning documents.

(c) Study, develop, and describe appropriate alternatives to recommended courses of action in any proposal which involves unresolved conflicts concerning alternative uses of available resources as provided by section 102(2)(E) of the Act.

(d) Provide for cases where actions are planned by private applicants or other non-Federal entities before Federal involvement so that:

(1) Policies or designated staff are available to advise potential applicants of studies or other information foreseeably required for later Federal action.

(2) The Federal agency consults early with appropriate State and local agencies and Indian tribes and with interested private persons and organizations when its own involvement is reasonably foreseeable.

(3) The Federal agency commences its NEPA process at the earliest possible time.

§ 1501.3 When to prepare an environmental assessment.

(a) Agencies shall prepare an environmental assessment (§ 1508.9) when necessary under the procedures adopted by individual agencies to supplement these regulations as described in § 1507.3. An assessment is not necessary if the agency has decided to prepare an environmental impact statement.

(b) Agencies may prepare an environmental assessment on any action at any time in order to assist agency planning and decisionmaking.

§ 1501.4 Whether to prepare an environmental impact statement.

In determining whether to prepare an environmental impact statement the Federal agency shall:

(a) Determine under its procedures supplementing these regulations (described in § 1507.3) whether the proposal is one which:

(1) Normally requires an environmental impact statement, or

(2) Normally does not require either an environmental impact statement or an environmental assessment (categorical exclusion).

(b) If the proposed action is not covered by paragraph (a) of this section, prepare an environmental assessment (§ 1508.9). The agency shall involve environmental agencies, applicants, and the public, to the extent practicable, in preparing assessments required by § 1508.9(a)(1).

(c) Based on the environmental assessment make its determination whether to prepare an environmental impact statement.

(d) Commence the scoping process (§ 1501.7), if the agency will prepare an environmental impact statement.

(e) Prepare a finding of no significant impact (§ 1508.13), if the agency determines on the basis of the environmental assessment not to prepare a statement.

(1) The agency shall make the finding of no significant impact available to the affected public as specified in § 1506.6.

(2) In certain limited circumstances, which the agency may cover in its procedures under § 1507.3, the agency shall make the finding of no significant impact available for public review (including State and areawide clearinghouses) for 30 days before the agency makes its final determination whether to prepare an environmental impact statement and before the action may begin. The circumstances are:

(i) The proposed action is, or is closely similar to, one which normally requires the preparation of an environmental impact statement under the procedures adopted by the agency pursuant to § 1507.3, or

(ii) The nature of the proposed action is one without precedent.

§ 1501.5 Lead agencies.

(a) A lead agency shall supervise the preparation of an environmental impact statement if more than one Federal agency either:

(1) Proposes or is involved in the same action; or

(2) Is involved in a group of actions directly related to each other because of their functional interdependence or geographical proximity.

(b) Federal, State, or local agencies, including at least one Federal agency, may act as joint lead agencies to prepare an environmental impact statement (§ 1506.2).

(c) If an action falls within the provisions of paragraph (a) of this section the potential lead agencies shall determine by letter or memorandum which agency shall be the lead agency and which shall be cooperating agencies. The agencies shall resolve the lead agency question so as not to cause delay. If there is disagreement among the agencies, the following factors (which are listed in order of descending importance) shall determine lead agency designation:

(1) Magnitude of agency's involvement.

(2) Project approval/disapproval authority.

(3) Expertise concerning the action's environmental effects.

(4) Duration of agency's involvement.

(5) Sequence of agency's involvement.

(d) Any Federal agency, or any State or local agency or private person substantially affected by the absence of lead agency designation, may make a written request to the potential lead agencies that a lead agency be designated.

(e) If Federal agencies are unable to agree on which agency will be the lead agency or if the procedure described in paragraph (c) of this section has not resulted within 45 days in a lead agency designation, any of the agencies or persons concerned may file a request with the Council asking it to determine which Federal agency shall be the lead agency.

A copy of the request shall be transmitted to each potential lead agency. The request shall consist of:

(1) A precise description of the nature and extent of the proposed action.

(2) A detailed statement of why each potential lead agency should or should not be the lead agency under the criteria specified in paragraph (c) of this section.

(f) A response may be filed by any potential lead agency concerned within 20 days after a request is filed with the Council. The Council shall determine as soon as possible but not later than 20 days after receiving the request and all responses to it which Federal agency shall be the lead agency and which other Federal agencies shall be cooperating agencies.

[43 FR 55992, Nov. 29, 1978; 44 FR 873, Jan. 3, 1979]

§ 1501.6 Cooperating agencies.

The purpose of this section is to emphasize agency cooperation early in the NEPA process. Upon request of the lead agency, any other Federal agency which has jurisdiction by law shall be a cooperating agency. In addition any other Federal agency which has special expertise with respect to any environmental issue, which should be addressed in the statement may be a cooperating agency upon request of the lead agency. An agency may request the lead agency to designate it a cooperating agency.

(a) The lead agency shall:

(1) Request the participation of each cooperating agency in the NEPA process at the earliest possible time.

(2) Use the environmental analysis and proposals of cooperating agencies with jurisdiction by law or special expertise, to the maximum extent possible consistent with its responsibility as lead agency.

(3) Meet with a cooperating agency at the latter's request.

(b) Each cooperating agency shall:

(1) Participate in the NEPA process at the earliest possible time.

(2) Participate in the scoping process (described below in § 1501.7).

(3) Assume on request of the lead agency responsibility for developing information and preparing environmental analyses including portions of the environmental impact statement concerning which the cooperating agency has special expertise.

(4) Make available staff support at the lead agency's request to enhance the latter's interdisciplinary capability.

(5) Normally use its own funds. The lead agency shall, to the extent available funds permit, fund those major activities or analyses it requests from cooperating agencies. Potential lead agencies shall include such funding requirements in their budget requests.

(c) A cooperating agency may in response to a lead agency's request for assistance in preparing the environmental impact statement (described in paragraph (b)(3), (4), or (5) of this section) reply that other program commitments preclude any involvement or the degree of involvement requested in the action that is the subject of the environmental impact statement. A copy of this reply shall be submitted to the Council.

§ 1501.7 Scoping.

There shall be an early and open process for determining the scope of issues to be addressed and for identifying the significant issues related to a proposed action. This process shall be termed scoping. As soon as practicable after its decision to prepare an environmental impact statement and before the scoping process the lead agency shall publish a notice of intent (§ 1508.22) in the FEDERAL REGISTER except as provided in § 1507.3(e).

(a) As part of the scoping process the lead agency shall:

(1) Invite the participation of affected Federal, State, and local agencies, any affected Indian tribe, the proponent of the action, and other interested persons (including those who might not be in accord with the action on environmental grounds), unless there is a limited exception under § 1507.3(c). An agency may give notice in accordance with § 1506.6.

(2) Determine the scope (§ 1508.25) and the significant issues to be analyzed in depth in the environmental impact statement.

(3) Identify and eliminate from detailed study the issues which are not significant or which have been covered by prior environmental review (§ 1506.3), narrowing the discussion of these issues in the statement to a brief presentation of why they will not have a significant effect on the human environment or providing a reference to their coverage elsewhere.

(4) Allocate assignments for preparation of the environmental impact statement among the lead and cooperating agencies, with the lead agency retaining responsibility for the statement.

(5) Indicate any public environmental assessments and other environmental impact statements which are being or will be prepared that are related to but are not part of the scope of the impact statement under consideration.

(6) Identify other environmental review and consultation requirements so the lead and cooperating agencies may prepare other required analyses and studies concurrently with, and integrated with, the environmental impact statement as provided in § 1502.25.

(7) Indicate the relationship between the timing of the preparation of environmental analyses and the agency's tentative planning and decisionmaking schedule.

(b) As part of the scoping process the lead agency may:

(1) Set page limits on environmental documents (§ 1502.7).

(2) Set time limits (§ 1501.8).

(3) Adopt procedures under § 1507.3 to combine its environmental assessment process with its scoping process.

(4) Hold an early scoping meeting or meetings which may be integrated with any other early planning meeting the agency has. Such a scoping meeting will often be appropriate when the impacts of a particular action are confined to specific sites.

(c) An agency shall revise the determinations made under paragraphs (a) and (b) of this section if substantial changes are made later in the proposed

action, or if significant new circumstances or information arise which bear on the proposal or its impacts.

§ 1501.8 Time limits.

Although the Council has decided that prescribed universal time limits for the entire NEPA process are too inflexible, Federal agencies are encouraged to set time limits appropriate to individual actions (consistent with the time intervals required by § 1506.10). When multiple agencies are involved the reference to agency below means lead agency.

(a) The agency shall set time limits if an applicant for the proposed action requests them: *Provided*, That the limits are consistent with the purposes of NEPA and other essential considerations of national policy.

(b) The agency may:

(1) Consider the following factors in determining time limits:

(i) Potential for environmental harm.

(ii) Size of the proposed action.

(iii) State of the art of analytic techniques.

(iv) Degree of public need for the proposed action, including the consequences of delay.

(v) Number of persons and agencies affected.

(vi) Degree to which relevant information is known and if not known the time required for obtaining it.

(vii) Degree to which the action is controversial.

(viii) Other time limits imposed on the agency by law, regulations, or executive order.

(2) Set overall time limits or limits for each constituent part of the NEPA process, which may include:

(i) Decision on whether to prepare an environmental impact statement (if not already decided).

(ii) Determination of the scope of the environmental impact statement.

(iii) Preparation of the draft environmental impact statement.

(iv) Review of any comments on the draft environmental impact statement from the public and agencies.

(v) Preparation of the final environmental impact statement.

(vi) Review of any comments on the final environmental impact statement.

(vii) Decision on the action based in part on the environmental impact statement.

(3) Designate a person (such as the project manager or a person in the agency's office with NEPA responsibilities) to expedite the NEPA process.

(c) State or local agencies or members of the public may request a Federal Agency to set time limits.

PART 1502—ENVIRONMENTAL IMPACT STATEMENT

Sec.

1502.1 Purpose.
1502.2 Implementation.
1502.3 Statutory requirements for statements.
1502.4 Major Federal actions requiring the preparation of environmental impact statements.
1502.5 Timing.
1502.6 Interdisciplinary preparation.
1502.7 Page limits.
1502.8 Writing.
1502.9 Draft, final, and supplemental statements.
1502.10 Recommended format.
1502.11 Cover sheet.
1502.12 Summary.
1502.13 Purpose and need.
1502.14 Alternatives including the proposed action.
1502.15 Affected environment.
1502.16 Environmental consequences.
1502.17 List of preparers.
1502.18 Appendix.
1502.19 Circulation of the environmental impact statement.
1502.20 Tiering.
1502.21 Incorporation by reference.
1502.22 Incomplete or unavailable information.
1502.23 Cost-benefit analysis.
1502.24 Methodology and scientific accuracy.
1502.25 Environmental review and consultation requirements.

AUTHORITY: NEPA, the Environmental Quality Improvement Act of 1970, as amended (42 U.S.C. 4371 *et seq.*), sec. 309 of the Clean Air Act, as amended (42 U.S.C. 7609), and E.O. 11514 (Mar. 5, 1970, as amended by E.O. 11991, May 24, 1977).

SOURCE: 43 FR 55994, Nov. 29, 1978, unless otherwise noted.

§ 1502.1 Purpose.

The primary purpose of an environmental impact statement is to serve as an action-forcing device to insure that the policies and goals defined in the

Act are infused into the ongoing programs and actions of the Federal Government. It shall provide full and fair discussion of significant environmental impacts and shall inform decisionmakers and the public of the reasonable alternatives which would avoid or minimize adverse impacts or enhance the quality of the human environment. Agencies shall focus on significant environmental issues and alternatives and shall reduce paperwork and the accumulation of extraneous background data. Statements shall be concise, clear, and to the point, and shall be supported by evidence that the agency has made the necessary environmental analyses. An environmental impact statement is more than a disclosure document. It shall be used by Federal officials in conjunction with other relevant material to plan actions and make decisions.

§ 1502.2 Implementation.

To achieve the purposes set forth in § 1502.1 agencies shall prepare environmental impact statements in the following manner:

(a) Environmental impact statements shall be analytic rather than encyclopedic.

(b) Impacts shall be discussed in proportion to their significance. There shall be only brief discussion of other than significant issues. As in a finding of no significant impact, there should be only enough discussion to show why more study is not warranted.

(c) Environmental impact statements shall be kept concise and shall be no longer than absolutely necessary to comply with NEPA and with these regulations. Length should vary first with potential environmental problems and then with project size.

(d) Environmental impact statements shall state how alternatives considered in it and decisions based on it will or will not achieve the requirements of sections 101 and 102(1) of the Act and other environmental laws and policies.

(e) The range of alternatives discussed in environmental impact statements shall encompass those to be considered by the ultimate agency decisionmaker.

(f) Agencies shall not commit resources prejudicing selection of alternatives before making a final decision (§ 1506.1).

(g) Environmental impact statements shall serve as the means of assessing the environmental impact of proposed agency actions, rather than justifying decisions already made.

§ 1502.3 Statutory requirements for statements.

As required by sec. 102(2)(C) of NEPA environmental impact statements (§ 1508.11) are to be included in every recommendation or report.

On proposals (§ 1508.23).

For legislation and (§ 1508.17).

Other major Federal actions (§ 1508.18).

Significantly (§ 1508.27).

Affecting (§§ 1508.3, 1508.8).

The quality of the human environment (§ 1508.14).

§ 1502.4 Major Federal actions requiring the preparation of environmental impact statements.

(a) Agencies shall make sure the proposal which is the subject of an environmental impact statement is properly defined. Agencies shall use the criteria for scope (§ 1508.25) to determine which proposal(s) shall be the subject of a particular statement. Proposals or parts of proposals which are related to each other closely enough to be, in effect, a single course of action shall be evaluated in a single impact statement.

(b) Environmental impact statements may be prepared, and are sometimes required, for broad Federal actions such as the adoption of new agency programs or regulations (§ 1508.18). Agencies shall prepare statements on broad actions so that they are relevant to policy and are timed to coincide with meaningful points in agency planning and decisionmaking.

(c) When preparing statements on broad actions (including proposals by more than one agency), agencies may find it useful to evaluate the proposal(s) in one of the following ways:

(1) Geographically, including actions occurring in the same general location, such as body of water, region, or metropolitan area.

(2) Generically, including actions which have relevant similarities, such

as common timing, impacts, alternatives, methods of implementation, media, or subject matter.

(3) By stage of technological development including federal or federally assisted research, development or demonstration programs for new technologies which, if applied, could significantly affect the quality of the human environment. Statements shall be prepared on such programs and shall be available before the program has reached a stage of investment or commitment to implementation likely to determine subsequent development or restrict later alternatives.

(d) Agencies shall as appropriate employ scoping (§ 1501.7), tiering (§ 1502.20), and other methods listed in §§ 1500.4 and 1500.5 to relate broad and narrow actions and to avoid duplication and delay.

§ 1502.5 Timing.

An agency shall commence preparation of an environmental impact statement as close as possible to the time the agency is developing or is presented with a proposal (§ 1508.23) so that preparation can be completed in time for the final statement to be included in any recommendation or report on the proposal. The statement shall be prepared early enough so that it can serve practically as an important contribution to the decision-making process and will not be used to rationalize or justify decisions already made (§§ 1500.2(c), 1501.2, and 1502.2). For instance:

(a) For projects directly undertaken by Federal agencies the environmental impact statement shall be prepared at the feasibility analysis (go-no go) stage and may be supplemented at a later stage if necessary.

(b) For applications to the agency appropriate environmental assessments or statements shall be commenced no later than immediately after the application is received. Federal agencies are encouraged to begin preparation of such assessments or statements earlier, preferably jointly with applicable State or local agencies.

(c) For adjudication, the final environmental impact statement shall normally precede the final staff recommendation and that portion of the public hearing related to the impact study. In appropriate circumstances the statement may follow preliminary hearings designed to gather information for use in the statements.

(d) For informal rulemaking the draft environmental impact statement shall normally accompany the proposed rule.

§ 1502.6 Interdisciplinary preparation.

Environmental impact statements shall be prepared using an inter-disciplinary approach which will insure the integrated use of the natural and social sciences and the environmental design arts (section 102(2)(A) of the Act). The disciplines of the preparers shall be appropriate to the scope and issues identified in the scoping process (§ 1501.7).

§ 1502.7 Page limits.

The text of final environmental impact statements (e.g., paragraphs (d) through (g) of § 1502.10) shall normally be less than 150 pages and for proposals of unusual scope or complexity shall normally be less than 300 pages.

§ 1502.8 Writing.

Environmental impact statements shall be written in plain language and may use appropriate graphics so that decisionmakers and the public can readily understand them. Agencies should employ writers of clear prose or editors to write, review, or edit statements, which will be based upon the analysis and supporting data from the natural and social sciences and the environmental design arts.

§ 1502.9 Draft, final, and supplemental statements.

Except for proposals for legislation as provided in § 1506.8 environmental impact statements shall be prepared in two stages and may be supplemented.

(a) Draft environmental impact statements shall be prepared in accordance with the scope decided upon in the scoping process. The lead agency shall work with the cooperating agencies and shall obtain comments as required in part 1503 of this chapter. The draft statement must fulfill and satisfy to the fullest extent possible the requirements established for final statements

in section 102(2)(C) of the Act. If a draft statement is so inadequate as to preclude meaningful analysis, the agency shall prepare and circulate a revised draft of the appropriate portion. The agency shall make every effort to disclose and discuss at appropriate points in the draft statement all major points of view on the environmental impacts of the alternatives including the proposed action.

(b) Final environmental impact statements shall respond to comments as required in part 1503 of this chapter. The agency shall discuss at appropriate points in the final statement any responsible opposing view which was not adequately discussed in the draft statement and shall indicate the agency's response to the issues raised.

(c) Agencies:

(1) Shall prepare supplements to either draft or final environmental impact statements if:

(i) The agency makes substantial changes in the proposed action that are relevant to environmental concerns; or

(ii) There are significant new circumstances or information relevant to environmental concerns and bearing on the proposed action or its impacts.

(2) May also prepare supplements when the agency determines that the purposes of the Act will be furthered by doing so.

(3) Shall adopt procedures for introducing a supplement into its formal administrative record, if such a record exists.

(4) Shall prepare, circulate, and file a supplement to a statement in the same fashion (exclusive of scoping) as a draft and final statement unless alternative procedures are approved by the Council.

§ 1502.10 Recommended format.

Agencies shall use a format for environmental impact statements which will encourage good analysis and clear presentation of the alternatives including the proposed action. The following standard format for environmental impact statements should be followed unless the agency determines that there is a compelling reason to do otherwise:

(a) Cover sheet.

(b) Summary.

(c) Table of contents.

(d) Purpose of and need for action.

(e) Alternatives including proposed action (sections 102(2)(C)(iii) and 102(2)(E) of the Act).

(f) Affected environment.

(g) Environmental consequences (especially sections 102(2)(C)(i), (ii), (iv), and (v) of the Act).

(h) List of preparers.

(i) List of Agencies, Organizations, and persons to whom copies of the statement are sent.

(j) Index.

(k) Appendices (if any).

If a different format is used, it shall include paragraphs (a), (b), (c), (h), (i), and (j), of this section and shall include the substance of paragraphs (d), (e), (f), (g), and (k) of this section, as further described in §§ 1502.11 through 1502.18, in any appropriate format.

§ 1502.11 Cover sheet.

The cover sheet shall not exceed one page. It shall include:

(a) A list of the responsible agencies including the lead agency and any cooperating agencies.

(b) The title of the proposed action that is the subject of the statement (and if appropriate the titles of related cooperating agency actions), together with the State(s) and county(ies) (or other jurisdiction if applicable) where the action is located.

(c) The name, address, and telephone number of the person at the agency who can supply further information.

(d) A designation of the statement as a draft, final, or draft or final supplement.

(e) A one paragraph abstract of the statement.

(f) The date by which comments must be received (computed in cooperation with EPA under § 1506.10).

The information required by this section may be entered on Standard Form 424 (in items 4, 6, 7, 10, and 18).

§ 1502.12 Summary.

Each environmental impact statement shall contain a summary which adequately and accurately summarizes the statement. The summary shall stress the major conclusions, areas of controversy (including issues raised by agencies and the public), and the issues to be resolved (including the choice

among alternatives). The summary will normally not exceed 15 pages.

§ 1502.13 Purpose and need.

The statement shall briefly specify the underlying purpose and need to which the agency is responding in proposing the alternatives including the proposed action.

§ 1502.14 Alternatives including the proposed action.

This section is the heart of the environmental impact statement. Based on the information and analysis presented in the sections on the Affected Environment (§ 1502.15) and the Environmental Consequences (§ 1502.16), it should present the environmental impacts of the proposal and the alternatives in comparative form, thus sharply defining the issues and providing a clear basis for choice among options by the decisionmaker and the public. In this section agencies shall:

(a) Rigorously explore and objectively evaluate all reasonable alternatives, and for alternatives which were eliminated from detailed study, briefly discuss the reasons for their having been eliminated.

(b) Devote substantial treatment to each alternative considered in detail including the proposed action so that reviewers may evaluate their comparative merits.

(c) Include reasonable alternatives not within the jurisdiction of the lead agency.

(d) Include the alternative of no action.

(e) Identify the agency's preferred alternative or alternatives, if one or more exists, in the draft statement and identify such alternative in the final statement unless another law prohibits the expression of such a preference.

(f) Include appropriate mitigation measures not already included in the proposed action or alternatives.

§ 1502.15 Affected environment.

The environmental impact statement shall succinctly describe the environment of the area(s) to be affected or created by the alternatives under consideration. The descriptions shall be no longer than is necessary to understand the effects of the alternatives. Data and analyses in a statement shall be commensurate with the importance of the impact, with less important material summarized, consolidated, or simply referenced. Agencies shall avoid useless bulk in statements and shall concentrate effort and attention on important issues. Verbose descriptions of the affected environment are themselves no measure of the adequacy of an environmental impact statement.

§ 1502.16 Environmental consequences.

This section forms the scientific and analytic basis for the comparisons under § 1502.14. It shall consolidate the discussions of those elements required by sections 102(2)(C)(i), (ii), (iv), and (v) of NEPA which are within the scope of the statement and as much of section 102(2)(C)(iii) as is necessary to support the comparisons. The discussion will include the environmental impacts of the alternatives including the proposed action, any adverse environmental effects which cannot be avoided should the proposal be implemented, the relationship between short-term uses of man's environment and the maintenance and enhancement of long-term productivity, and any irreversible or irretrievable commitments of resources which would be involved in the proposal should it be implemented. This section should not duplicate discussions in § 1502.14. It shall include discussions of:

(a) Direct effects and their significance (§ 1508.8).

(b) Indirect effects and their significance (§ 1508.8).

(c) Possible conflicts between the proposed action and the objectives of Federal, regional, State, and local (and in the case of a reservation, Indian tribe) land use plans, policies and controls for the area concerned. (See § 1506.2(d).)

(d) The environmental effects of alternatives including the proposed action. The comparisons under § 1502.14 will be based on this discussion.

(e) Energy requirements and conservation potential of various alternatives and mitigation measures.

(f) Natural or depletable resource requirements and conservation potential of various alternatives and mitigation measures.

(g) Urban quality, historic and cultural resources, and the design of the built environment, including the reuse and conservation potential of various alternatives and mitigation measures.

(h) Means to mitigate adverse environmental impacts (if not fully covered under § 1502.14(f)).

[43 FR 55994, Nov. 29, 1978; 44 FR 873, Jan. 3, 1979]

§ 1502.17 List of preparers.

The environmental impact statement shall list the names, together with their qualifications (expertise, experience, professional disciplines), of the persons who were primarily responsible for preparing the environmental impact statement or significant background papers, including basic components of the statement (§§ 1502.6 and 1502.8). Where possible the persons who are responsible for a particular analysis, including analyses in background papers, shall be identified. Normally the list will not exceed two pages.

§ 1502.18 Appendix.

If an agency prepares an appendix to an environmental impact statement the appendix shall:

(a) Consist of material prepared in connection with an environmental impact statement (as distinct from material which is not so prepared and which is incorporated by reference (§ 1502.21)).

(b) Normally consist of material which substantiates any analysis fundamental to the impact statement.

(c) Normally be analytic and relevant to the decision to be made.

(d) Be circulated with the environmental impact statement or be readily available on request.

§ 1502.19 Circulation of the environmental impact statement.

Agencies shall circulate the entire draft and final environmental impact statements except for certain appendices as provided in § 1502.18(d) and unchanged statements as provided in § 1503.4(c). However, if the statement is unusually long, the agency may circulate the summary instead, except that the entire statement shall be furnished to:

(a) Any Federal agency which has jurisdiction by law or special expertise with respect to any environmental impact involved and any appropriate Federal, State or local agency authorized to develop and enforce environmental standards.

(b) The applicant, if any.

(c) Any person, organization, or agency requesting the entire environmental impact statement.

(d) In the case of a final environmental impact statement any person, organization, or agency which submitted substantive comments on the draft.

If the agency circulates the summary and thereafter receives a timely request for the entire statement and for additional time to comment, the time for that requestor only shall be extended by at least 15 days beyond the minimum period.

§ 1502.20 Tiering.

Agencies are encouraged to tier their environmental impact statements to eliminate repetitive discussions of the same issues and to focus on the actual issues ripe for decision at each level of environmental review (§ 1508.28). Whenever a broad environmental impact statement has been prepared (such as a program or policy statement) and a subsequent statement or environmental assessment is then prepared on an action included within the entire program or policy (such as a site specific action) the subsequent statement or environmental assessment need only summarize the issues discussed in the broader statement and incorporate discussions from the broader statement by reference and shall concentrate on the issues specific to the subsequent action. The subsequent document shall state where the earlier document is available. Tiering may also be appropriate for different stages of actions. (Section 1508.28).

§ 1502.21 Incorporation by reference.

Agencies shall incorporate material into an environmental impact statement by reference when the effect will be to cut down on bulk without impeding agency and public review of the action. The incorporated material shall be cited in the statement and its content briefly described. No material

may be incorporated by reference unless it is reasonably available for inspection by potentially interested persons within the time allowed for comment. Material based on proprietary data which is itself not available for review and comment shall not be incorporated by reference.

§ 1502.22 Incomplete or unavailable information.

When an agency is evaluating reasonably foreseeable significant adverse effects on the human environment in an environmental impact statement and there is incomplete or unavailable information, the agency shall always make clear that such information is lacking.

(a) If the incomplete information relevant to reasonably foreseeable significant adverse impacts is essential to a reasoned choice among alternatives and the overall costs of obtaining it are not exorbitant, the agency shall include the information in the environmental impact statement.

(b) If the information relevant to reasonably foreseeable significant adverse impacts cannot be obtained because the overall costs of obtaining it are exorbitant or the means to obtain it are not known, the agency shall include within the environmental impact statement:

(1) A statement that such information is incomplete or unavailable; (2) a statement of the relevance of the incomplete or unavailable information to evaluating reasonably foreseeable significant adverse impacts on the human environment; (3) a summary of existing credible scientific evidence which is relevant to evaluating the reasonably foreseeable significant adverse impacts on the human environment, and (4) the agency's evaluation of such impacts based upon theoretical approaches or research methods generally accepted in the scientific community. For the purposes of this section, ''reasonably foreseeable'' includes impacts which have catastrophic consequences, even if their probability of occurrence is low, provided that the analysis of the impacts is supported by credible scientific evidence, is not based on pure conjecture, and is within the rule of reason.

(c) The amended regulation will be applicable to all environmental impact statements for which a Notice of Intent (40 CFR 1508.22) is published in the FEDERAL REGISTER on or after May 27, 1986. For environmental impact statements in progress, agencies may choose to comply with the requirements of either the original or amended regulation.

[51 FR 15625, Apr. 25, 1986]

§ 1502.23 Cost-benefit analysis.

If a cost-benefit analysis relevant to the choice among environmentally different alternatives is being considered for the proposed action, it shall be incorporated by reference or appended to the statement as an aid in evaluating the environmental consequences. To assess the adequacy of compliance with section 102(2)(B) of the Act the statement shall, when a cost-benefit analysis is prepared, discuss the relationship between that analysis and any analyses of unquantified environmental impacts, values, and amenities. For purposes of complying with the Act, the weighing of the merits and drawbacks of the various alternatives need not be displayed in a monetary cost-benefit analysis and should not be when there are important qualitative considerations. In any event, an environmental impact statement should at least indicate those considerations, including factors not related to environmental quality, which are likely to be relevant and important to a decision.

§ 1502.24 Methodology and scientific accuracy.

Agencies shall insure the professional integrity, including scientific integrity, of the discussions and analyses in environmental impact statements. They shall identify any methodologies used and shall make explicit reference by footnote to the scientific and other sources relied upon for conclusions in the statement. An agency may place discussion of methodology in an appendix.

§ 1502.25 Environmental review and consultation requirements.

(a) To the fullest extent possible, agencies shall prepare draft environmental impact statements concurrently with and integrated with environmental impact analyses and related surveys and studies required by the Fish and Wildlife Coordination Act (16 U.S.C. 661 *et seq.*), the National Historic Preservation Act of 1966 (16 U.S.C. 470 *et seq.*), the Endangered Species Act of 1973 (16 U.S.C. 1531 *et seq.*), and other environmental review laws and executive orders.

(b) The draft environmental impact statement shall list all Federal permits, licenses, and other entitlements which must be obtained in implementing the proposal. If it is uncertain whether a Federal permit, license, or other entitlement is necessary, the draft environmental impact statement shall so indicate.

PART 1503—COMMENTING

Sec.
1503.1 Inviting comments.
1503.2 Duty to comment.
1503.3 Specificity of comments.
1503.4 Response to comments.

AUTHORITY: NEPA, the Environmental Quality Improvement Act of 1970, as amended (42 U.S.C. 4371 *et seq.*), sec. 309 of the Clean Air Act, as amended (42 U.S.C. 7609), and E.O. 11514 (Mar. 5, 1970, as amended by E.O. 11991, May 24, 1977).

SOURCE: 43 FR 55997, Nov. 29, 1978, unless otherwise noted.

§ 1503.1 Inviting comments.

(a) After preparing a draft environmental impact statement and before preparing a final environmental impact statement the agency shall:

(1) Obtain the comments of any Federal agency which has jurisdiction by law or special expertise with respect to any environmental impact involved or which is authorized to develop and enforce environmental standards.

(2) Request the comments of:

(i) Appropriate State and local agencies which are authorized to develop and enforce environmental standards;

(ii) Indian tribes, when the effects may be on a reservation; and

(iii) Any agency which has requested that it receive statements on actions of the kind proposed.

Office of Management and Budget Circular A–95 (Revised), through its system of clearinghouses, provides a means of securing the views of State and local environmental agencies. The clearinghouses may be used, by mutual agreement of the lead agency and the clearinghouse, for securing State and local reviews of the draft environmental impact statements.

(3) Request comments from the applicant, if any.

(4) Request comments from the public, affirmatively soliciting comments from those persons or organizations who may be interested or affected.

(b) An agency may request comments on a final environmental impact statement before the decision is finally made. In any case other agencies or persons may make comments before the final decision unless a different time is provided under § 1506.10.

§ 1503.2 Duty to comment.

Federal agencies with jurisdiction by law or special expertise with respect to any environmental impact involved and agencies which are authorized to develop and enforce environmental standards shall comment on statements within their jurisdiction, expertise, or authority. Agencies shall comment within the time period specified for comment in § 1506.10. A Federal agency may reply that it has no comment. If a cooperating agency is satisfied that its views are adequately reflected in the environmental impact statement, it should reply that it has no comment.

§ 1503.3 Specificity of comments.

(a) Comments on an environmental impact statement or on a proposed action shall be as specific as possible and may address either the adequacy of the statement or the merits of the alternatives discussed or both.

(b) When a commenting agency criticizes a lead agency's predictive methodology, the commenting agency should describe the alternative methodology which it prefers and why.

(c) A cooperating agency shall specify in its comments whether it needs additional information to fulfill other applicable environmental reviews or consultation requirements and what information it needs. In particular, it shall specify any additional information it needs to comment adequately on the draft statement's analysis of significant site-specific effects associated with the granting or approving by that cooperating agency of necessary Federal permits, licenses, or entitlements.

(d) When a cooperating agency with jurisdiction by law objects to or expresses reservations about the proposal on grounds of environmental impacts, the agency expressing the objection or reservation shall specify the mitigation measures it considers necessary to allow the agency to grant or approve applicable permit, license, or related requirements or concurrences.

§ 1503.4 Response to comments.

(a) An agency preparing a final environmental impact statement shall assess and consider comments both individually and collectively, and shall respond by one or more of the means listed below, stating its response in the final statement. Possible responses are to:

(1) Modify alternatives including the proposed action.

(2) Develop and evaluate alternatives not previously given serious consideration by the agency.

(3) Supplement, improve, or modify its analyses.

(4) Make factual corrections.

(5) Explain why the comments do not warrant further agency response, citing the sources, authorities, or reasons which support the agency's position and, if appropriate, indicate those circumstances which would trigger agency reappraisal or further response.

(b) All substantive comments received on the draft statement (or summaries thereof where the response has been exceptionally voluminous), should be attached to the final statement whether or not the comment is thought to merit individual discussion by the agency in the text of the statement.

(c) If changes in response to comments are minor and are confined to the responses described in paragraphs (a)(4) and (5) of this section, agencies may write them on errata sheets and attach them to the statement instead of rewriting the draft statement. In such cases only the comments, the responses, and the changes and not the final statement need be circulated (§ 1502.19). The entire document with a new cover sheet shall be filed as the final statement (§ 1506.9).

PART 1504—PREDECISION REFERRALS TO THE COUNCIL OF PROPOSED FEDERAL ACTIONS DETERMINED TO BE ENVIRONMENTALLY UNSATISFACTORY

Sec.
1504.1 Purpose.
1504.2 Criteria for referral.
1504.3 Procedure for referrals and response.

AUTHORITY: NEPA, the Environmental Quality Improvement Act of 1970, as amended (42 U.S.C. 4371 *et seq.*), sec. 309 of the Clean Air Act, as amended (42 U.S.C. 7609), and E.O. 11514 (Mar. 5, 1970, as amended by E.O. 11991, May 24, 1977).

§ 1504.1 Purpose.

(a) This part establishes procedures for referring to the Council Federal interagency disagreements concerning proposed major Federal actions that might cause unsatisfactory environmental effects. It provides means for early resolution of such disagreements.

(b) Under section 309 of the Clean Air Act (42 U.S.C. 7609), the Administrator of the Environmental Protection Agency is directed to review and comment publicly on the environmental impacts of Federal activities, including actions for which environmental impact statements are prepared. If after this review the Administrator determines that the matter is ''unsatisfactory from the standpoint of public health or welfare or environmental quality,'' section 309 directs that the matter be referred to the Council (hereafter ''environmental referrals'').

(c) Under section 102(2)(C) of the Act other Federal agencies may make similar reviews of environmental impact statements, including judgments on the acceptability of anticipated environmental impacts. These reviews

must be made available to the President, the Council and the public.

[43 FR 55998, Nov. 29, 1978]

§ 1504.2 Criteria for referral.

Environmental referrals should be made to the Council only after concerted, timely (as early as possible in the process), but unsuccessful attempts to resolve differences with the lead agency. In determining what environmental objections to the matter are appropriate to refer to the Council, an agency should weigh potential adverse environmental impacts, considering:

(a) Possible violation of national environmental standards or policies.

(b) Severity.

(c) Geographical scope.

(d) Duration.

(e) Importance as precedents.

(f) Availability of environmentally preferable alternatives.

[43 FR 55998, Nov. 29, 1978]

§ 1504.3 Procedure for referrals and response.

(a) A Federal agency making the referral to the Council shall:

(1) Advise the lead agency at the earliest possible time that it intends to refer a matter to the Council unless a satisfactory agreement is reached.

(2) Include such advice in the referring agency's comments on the draft environmental impact statement, except when the statement does not contain adequate information to permit an assessment of the matter's environmental acceptability.

(3) Identify any essential information that is lacking and request that it be made available at the earliest possible time.

(4) Send copies of such advice to the Council.

(b) The referring agency shall deliver its referral to the Council not later than twenty-five (25) days after the final environmental impact statement has been made available to the Environmental Protection Agency, commenting agencies, and the public. Except when an extension of this period has been granted by the lead agency, the Council will not accept a referral after that date.

(c) The referral shall consist of:

(1) A copy of the letter signed by the head of the referring agency and delivered to the lead agency informing the lead agency of the referral and the reasons for it, and requesting that no action be taken to implement the matter until the Council acts upon the referral. The letter shall include a copy of the statement referred to in (c)(2) of this section.

(2) A statement supported by factual evidence leading to the conclusion that the matter is unsatisfactory from the standpoint of public health or welfare or environmental quality. The statement shall:

(i) Identify any material facts in controversy and incorporate (by reference if appropriate) agreed upon facts,

(ii) Identify any existing environmental requirements or policies which would be violated by the matter,

(iii) Present the reasons why the referring agency believes the matter is environmentally unsatisfactory,

(iv) Contain a finding by the agency whether the issue raised is of national importance because of the threat to national environmental resources or policies or for some other reason,

(v) Review the steps taken by the referring agency to bring its concerns to the attention of the lead agency at the earliest possible time, and

(vi) Give the referring agency's recommendations as to what mitigation alternative, further study, or other course of action (including abandonment of the matter) are necessary to remedy the situation.

(d) Not later than twenty-five (25) days after the referral to the Council the lead agency may deliver a response to the Council, and the referring agency. If the lead agency requests more time and gives assurance that the matter will not go forward in the interim, the Council may grant an extension. The response shall:

(1) Address fully the issues raised in the referral.

(2) Be supported by evidence.

(3) Give the lead agency's response to the referring agency's recommendations.

(e) Interested persons (including the applicant) may deliver their views in writing to the Council. Views in support of the referral should be delivered

not later than the referral. Views in support of the response shall be delivered not later than the response.

(f) Not later than twenty-five (25) days after receipt of both the referral and any response or upon being informed that there will be no response (unless the lead agency agrees to a longer time), the Council may take one or more of the following actions:

(1) Conclude that the process of referral and response has successfully resolved the problem.

(2) Initiate discussions with the agencies with the objective of mediation with referring and lead agencies.

(3) Hold public meetings or hearings to obtain additional views and information.

(4) Determine that the issue is not one of national importance and request the referring and lead agencies to pursue their decision process.

(5) Determine that the issue should be further negotiated by the referring and lead agencies and is not appropriate for Council consideration until one or more heads of agencies report to the Council that the agencies' disagreements are irreconcilable.

(6) Publish its findings and recommendations (including where appropriate a finding that the submitted evidence does not support the position of an agency).

(7) When appropriate, submit the referral and the response together with the Council's recommendation to the President for action.

(g) The Council shall take no longer than 60 days to complete the actions specified in paragraph (f)(2), (3), or (5) of this section.

(h) When the referral involves an action required by statute to be determined on the record after opportunity for agency hearing, the referral shall be conducted in a manner consistent with 5 U.S.C. 557(d) (Administrative Procedure Act).

[43 FR 55998, Nov. 29, 1978; 44 FR 873, Jan. 3, 1979]

PART 1505—NEPA AND AGENCY DECISIONMAKING

Sec.

1505.1 Agency decisionmaking procedures.
1505.2 Record of decision in cases requiring environmental impact statements.
1505.3 Implementing the decision.

AUTHORITY: NEPA, the Environmental Quality Improvement Act of 1970, as amended (42 U.S.C. 4371 *et seq.*), sec. 309 of the Clean Air Act, as amended (42 U.S.C. 7609), and E.O. 11514 (Mar. 5, 1970, as amended by E.O. 11991, May 24, 1977).

SOURCE: 43 FR 55999, Nov. 29, 1978, unless otherwise noted.

§ 1505.1 Agency decisionmaking procedures.

Agencies shall adopt procedures (§ 1507.3) to ensure that decisions are made in accordance with the policies and purposes of the Act. Such procedures shall include but not be limited to:

(a) Implementing procedures under section 102(2) to achieve the requirements of sections 101 and 102(1).

(b) Designating the major decision points for the agency's principal programs likely to have a significant effect on the human environment and assuring that the NEPA process corresponds with them.

(c) Requiring that relevant environmental documents, comments, and responses be part of the record in formal rulemaking or adjudicatory proceedings.

(d) Requiring that relevant environmental documents, comments, and responses accompany the proposal through existing agency review processes so that agency officials use the statement in making decisions.

(e) Requiring that the alternatives considered by the decisionmaker are encompassed by the range of alternatives discussed in the relevant environmental documents and that the decisionmaker consider the alternatives described in the environmental impact statement. If another decision document accompanies the relevant environmental documents to the decisionmaker, agencies are encouraged to make available to the public before the decision is made any part of that document that relates to the comparison of alternatives.

§ 1505.2 Record of decision in cases requiring environmental impact statements.

At the time of its decision (§ 1506.10) or, if appropriate, its recommendation to Congress, each agency shall prepare a concise public record of decision. The record, which may be integrated into any other record prepared by the agency, including that required by OMB Circular A–95 (Revised), part I, sections 6(c) and (d), and part II, section 5(b)(4), shall:

(a) State what the decision was.

(b) Identify all alternatives considered by the agency in reaching its decision, specifying the alternative or alternatives which were considered to be environmentally preferable. An agency may discuss preferences among alternatives based on relevant factors including economic and technical considerations and agency statutory missions. An agency shall identify and discuss all such factors including any essential considerations of national policy which were balanced by the agency in making its decision and state how those considerations entered into its decision.

(c) State whether all practicable means to avoid or minimize environmental harm from the alternative selected have been adopted, and if not, why they were not. A monitoring and enforcement program shall be adopted and summarized where applicable for any mitigation.

§ 1505.3 Implementing the decision.

Agencies may provide for monitoring to assure that their decisions are carried out and should do so in important cases. Mitigation (§ 1505.2(c)) and other conditions established in the environmental impact statement or during its review and committed as part of the decision shall be implemented by the lead agency or other appropriate consenting agency. The lead agency shall:

(a) Include appropriate conditions in grants, permits or other approvals.

(b) Condition funding of actions on mitigation.

(c) Upon request, inform cooperating or commenting agencies on progress in carrying out mitigation measures which they have proposed and which were adopted by the agency making the decision.

(d) Upon request, make available to the public the results of relevant monitoring.

PART 1506—OTHER REQUIREMENTS OF NEPA

Sec.

1506.1 Limitations on actions during NEPA process.
1506.2 Elimination of duplication with State and local procedures.
1506.3 Adoption.
1506.4 Combining documents.
1506.5 Agency responsibility.
1506.6 Public involvement.
1506.7 Further guidance.
1506.8 Proposals for legislation.
1506.9 Filing requirements.
1506.10 Timing of agency action.
1506.11 Emergencies.
1506.12 Effective date.

AUTHORITY: NEPA, the Environmental Quality Improvement Act of 1970, as amended (42 U.S.C. 4371 *et seq.*), sec. 309 of the Clean Air Act, as amended (42 U.S.C. 7609), and E.O. 11514 (Mar. 5, 1970, as amended by E.O. 11991, May 24, 1977).

SOURCE: 43 FR 56000, Nov. 29, 1978, unless otherwise noted.

§ 1506.1 Limitations on actions during NEPA process.

(a) Until an agency issues a record of decision as provided in § 1505.2 (except as provided in paragraph (c) of this section), no action concerning the proposal shall be taken which would:

(1) Have an adverse environmental impact; or

(2) Limit the choice of reasonable alternatives.

(b) If any agency is considering an application from a non-Federal entity, and is aware that the applicant is about to take an action within the agency's jurisdiction that would meet either of the criteria in paragraph (a) of this section, then the agency shall promptly notify the applicant that the agency will take appropriate action to insure that the objectives and procedures of NEPA are achieved.

(c) While work on a required program environmental impact statement is in progress and the action is not covered by an existing program statement,

agencies shall not undertake in the interim any major Federal action covered by the program which may significantly affect the quality of the human environment unless such action:

(1) Is justified independently of the program;

(2) Is itself accompanied by an adequate environmental impact statement; and

(3) Will not prejudice the ultimate decision on the program. Interim action prejudices the ultimate decision on the program when it tends to determine subsequent development or limit alternatives.

(d) This section does not preclude development by applicants of plans or designs or performance of other work necessary to support an application for Federal, State or local permits or assistance. Nothing in this section shall preclude Rural Electrification Administration approval of minimal expenditures not affecting the environment (*e.g.* long leadtime equipment and purchase options) made by non-governmental entities seeking loan guarantees from the Administration.

§ 1506.2 Elimination of duplication with State and local procedures.

(a) Agencies authorized by law to cooperate with State agencies of statewide jurisdiction pursuant to section 102(2)(D) of the Act may do so.

(b) Agencies shall cooperate with State and local agencies to the fullest extent possible to reduce duplication between NEPA and State and local requirements, unless the agencies are specifically barred from doing so by some other law. Except for cases covered by paragraph (a) of this section, such cooperation shall to the fullest extent possible include:

(1) Joint planning processes.

(2) Joint environmental research and studies.

(3) Joint public hearings (except where otherwise provided by statute).

(4) Joint environmental assessments.

(c) Agencies shall cooperate with State and local agencies to the fullest extent possible to reduce duplication between NEPA and comparable State and local requirements, unless the agencies are specifically barred from doing so by some other law. Except for cases covered by paragraph (a) of this section, such cooperation shall to the fullest extent possible include joint environmental impact statements. In such cases one or more Federal agencies and one or more State or local agencies shall be joint lead agencies. Where State laws or local ordinances have environmental impact statement requirements in addition to but not in conflict with those in NEPA, Federal agencies shall cooperate in fulfilling these requirements as well as those of Federal laws so that one document will comply with all applicable laws.

(d) To better integrate environmental impact statements into State or local planning processes, statements shall discuss any inconsistency of a proposed action with any approved State or local plan and laws (whether or not federally sanctioned). Where an inconsistency exists, the statement should describe the extent to which the agency would reconcile its proposed action with the plan or law.

§ 1506.3 Adoption.

(a) An agency may adopt a Federal draft or final environmental impact statement or portion thereof provided that the statement or portion thereof meets the standards for an adequate statement under these regulations.

(b) If the actions covered by the original environmental impact statement and the proposed action are substantially the same, the agency adopting another agency's statement is not required to recirculate it except as a final statement. Otherwise the adopting agency shall treat the statement as a draft and recirculate it (except as provided in paragraph (c) of this section).

(c) A cooperating agency may adopt without recirculating the environmental impact statement of a lead agency when, after an independent review of the statement, the cooperating agency concludes that its comments and suggestions have been satisfied.

(d) When an agency adopts a statement which is not final within the agency that prepared it, or when the action it assesses is the subject of a referral under part 1504, or when the statement's adequacy is the subject of

a judicial action which is not final, the agency shall so specify.

§ 1506.4 Combining documents.

Any environmental document in compliance with NEPA may be combined with any other agency document to reduce duplication and paperwork.

§ 1506.5 Agency responsibility.

(a) *Information.* If an agency requires an applicant to submit environmental information for possible use by the agency in preparing an environmental impact statement, then the agency should assist the applicant by outlining the types of information required. The agency shall independently evaluate the information submitted and shall be responsible for its accuracy. If the agency chooses to use the information submitted by the applicant in the environmental impact statement, either directly or by reference, then the names of the persons responsible for the independent evaluation shall be included in the list of preparers (§ 1502.17). It is the intent of this paragraph that acceptable work not be redone, but that it be verified by the agency.

(b) *Environmental assessments.* If an agency permits an applicant to prepare an environmental assessment, the agency, besides fulfilling the requirements of paragraph (a) of this section, shall make its own evaluation of the environmental issues and take responsibility for the scope and content of the environmental assessment.

(c) *Environmental impact statements.* Except as provided in §§ 1506.2 and 1506.3 any environmental impact statement prepared pursuant to the requirements of NEPA shall be prepared directly by or by a contractor selected by the lead agency or where appropriate under § 1501.6(b), a cooperating agency. It is the intent of these regulations that the contractor be chosen solely by the lead agency, or by the lead agency in cooperation with cooperating agencies, or where appropriate by a cooperating agency to avoid any conflict of interest. Contractors shall execute a disclosure statement prepared by the lead agency, or where appropriate the cooperating agency, specifying that they have no financial or other interest in the outcome of the project. If the document is prepared by contract, the responsible Federal official shall furnish guidance and participate in the preparation and shall independently evaluate the statement prior to its approval and take responsibility for its scope and contents. Nothing in this section is intended to prohibit any agency from requesting any person to submit information to it or to prohibit any person from submitting information to any agency.

§ 1506.6 Public involvement.

Agencies shall:

(a) Make diligent efforts to involve the public in preparing and implementing their NEPA procedures.

(b) Provide public notice of NEPA-related hearings, public meetings, and the availability of environmental documents so as to inform those persons and agencies who may be interested or affected.

(1) In all cases the agency shall mail notice to those who have requested it on an individual action.

(2) In the case of an action with effects of national concern notice shall include publication in the FEDERAL REGISTER and notice by mail to national organizations reasonably expected to be interested in the matter and may include listing in the *102 Monitor*. An agency engaged in rulemaking may provide notice by mail to national organizations who have requested that notice regularly be provided. Agencies shall maintain a list of such organizations.

(3) In the case of an action with effects primarily of local concern the notice may include:

(i) Notice to State and areawide clearinghouses pursuant to OMB Circular A–95 (Revised).

(ii) Notice to Indian tribes when effects may occur on reservations.

(iii) Following the affected State's public notice procedures for comparable actions.

(iv) Publication in local newspapers (in papers of general circulation rather than legal papers).

(v) Notice through other local media.

(vi) Notice to potentially interested community organizations including small business associations.

(vii) Publication in newsletters that may be expected to reach potentially interested persons.

(viii) Direct mailing to owners and occupants of nearby or affected property.

(ix) Posting of notice on and off site in the area where the action is to be located.

(c) Hold or sponsor public hearings or public meetings whenever appropriate or in accordance with statutory requirements applicable to the agency. Criteria shall include whether there is:

(1) Substantial environmental controversy concerning the proposed action or substantial interest in holding the hearing.

(2) A request for a hearing by another agency with jurisdiction over the action supported by reasons why a hearing will be helpful. If a draft environmental impact statement is to be considered at a public hearing, the agency should make the statement available to the public at least 15 days in advance (unless the purpose of the hearing is to provide information for the draft environmental impact statement).

(d) Solicit appropriate information from the public.

(e) Explain in its procedures where interested persons can get information or status reports on environmental impact statements and other elements of the NEPA process.

(f) Make environmental impact statements, the comments received, and any underlying documents available to the public pursuant to the provisions of the Freedom of Information Act (5 U.S.C. 552), without regard to the exclusion for interagency memoranda where such memoranda transmit comments of Federal agencies on the environmental impact of the proposed action. Materials to be made available to the public shall be provided to the public without charge to the extent practicable, or at a fee which is not more than the actual costs of reproducing copies required to be sent to other Federal agencies, including the Council.

§ 1506.7 Further guidance.

The Council may provide further guidance concerning NEPA and its procedures including:

(a) A handbook which the Council may supplement from time to time, which shall in plain language provide guidance and instructions concerning the application of NEPA and these regulations.

(b) Publication of the Council's Memoranda to Heads of Agencies.

(c) In conjunction with the Environmental Protection Agency and the publication of the 102 Monitor, notice of:

(1) Research activities;

(2) Meetings and conferences related to NEPA; and

(3) Successful and innovative procedures used by agencies to implement NEPA.

§ 1506.8 Proposals for legislation.

(a) The NEPA process for proposals for legislation (§ 1508.17) significantly affecting the quality of the human environment shall be integrated with the legislative process of the Congress. A legislative environmental impact statement is the detailed statement required by law to be included in a recommendation or report on a legislative proposal to Congress. A legislative environmental impact statement shall be considered part of the formal transmittal of a legislative proposal to Congress; however, it may be transmitted to Congress up to 30 days later in order to allow time for completion of an accurate statement which can serve as the basis for public and Congressional debate. The statement must be available in time for Congressional hearings and deliberations.

(b) Preparation of a legislative environmental impact statement shall conform to the requirements of these regulations except as follows:

(1) There need not be a scoping process.

(2) The legislative statement shall be prepared in the same manner as a draft statement, but shall be considered the ''detailed statement'' required by statute; *Provided,* That when any of the following conditions exist both the draft and final environmental impact statement on the legislative proposal shall be prepared and circulated as provided by §§ 1503.1 and 1506.10.

(i) A Congressional Committee with jurisdiction over the proposal has a

rule requiring both draft and final environmental impact statements.

(ii) The proposal results from a study process required by statute (such as those required by the Wild and Scenic Rivers Act (16 U.S.C. 1271 *et seq.*) and the Wilderness Act (16 U.S.C. 1131 *et seq.*)).

(iii) Legislative approval is sought for Federal or federally assisted construction or other projects which the agency recommends be located at specific geographic locations. For proposals requiring an environmental impact statement for the acquisition of space by the General Services Administration, a draft statement shall accompany the Prospectus or the 11(b) Report of Building Project Surveys to the Congress, and a final statement shall be completed before site acquisition.

(iv) The agency decides to prepare draft and final statements.

(c) Comments on the legislative statement shall be given to the lead agency which shall forward them along with its own responses to the Congressional committees with jurisdiction.

§ 1506.9 Filing requirements.

Environmental impact statements together with comments and responses shall be filed with the Environmental Protection Agency, attention Office of Federal Activities (A–104),1200 Pennsylvania Ave., NW., Washington, DC 20460. Statements shall be filed with EPA no earlier than they are also transmitted to commenting agencies and made available to the public. EPA shall deliver one copy of each statement to the Council, which shall satisfy the requirement of availability to the President. EPA may issue guidelines to agencies to implement its responsibilities under this section and § 1506.10.

§ 1506.10 Timing of agency action.

(a) The Environmental Protection Agency shall publish a notice in the FEDERAL REGISTER each week of the environmental impact statements filed during the preceding week. The minimum time periods set forth in this section shall be calculated from the date of publication of this notice.

(b) No decision on the proposed action shall be made or recorded under § 1505.2 by a Federal agency until the later of the following dates:

(1) Ninety (90) days after publication of the notice described above in paragraph (a) of this section for a draft environmental impact statement.

(2) Thirty (30) days after publication of the notice described above in paragraph (a) of this section for a final environmental impact statement.

An exception to the rules on timing may be made in the case of an agency decision which is subject to a formal internal appeal. Some agencies have a formally established appeal process which allows other agencies or the public to take appeals on a decision and make their views known, after publication of the final environmental impact statement. In such cases, where a real opportunity exists to alter the decision, the decision may be made and recorded at the same time the environmental impact statement is published. This means that the period for appeal of the decision and the 30-day period prescribed in paragraph (b)(2) of this section may run concurrently. In such cases the environmental impact statement shall explain the timing and the public's right of appeal. An agency engaged in rulemaking under the Administrative Procedure Act or other statute for the purpose of protecting the public health or safety, may waive the time period in paragraph (b)(2) of this section and publish a decision on the final rule simultaneously with publication of the notice of the availability of the final environmental impact statement as described in paragraph (a) of this section.

(c) If the final environmental impact statement is filed within ninety (90) days after a draft environmental impact statement is filed with the Environmental Protection Agency, the minimum thirty (30) day period and the minimum ninety (90) day period may run concurrently. However, subject to paragraph (d) of this section agencies shall allow not less than 45 days for comments on draft statements.

(d) The lead agency may extend prescribed periods. The Environmental Protection Agency may upon a showing by the lead agency of compelling reasons of national policy reduce the prescribed periods and may upon a

showing by any other Federal agency of compelling reasons of national policy also extend prescribed periods, but only after consultation with the lead agency. (Also see § 1507.3(d).) Failure to file timely comments shall not be a sufficient reason for extending a period. If the lead agency does not concur with the extension of time, EPA may not extend it for more than 30 days. When the Environmental Protection Agency reduces or extends any period of time it shall notify the Council.

[43 FR 56000, Nov. 29, 1978; 44 FR 874, Jan. 3, 1979]

§ 1506.11 Emergencies.

Where emergency circumstances make it necessary to take an action with significant environmental impact without observing the provisions of these regulations, the Federal agency taking the action should consult with the Council about alternative arrangements. Agencies and the Council will limit such arrangements to actions necessary to control the immediate impacts of the emergency. Other actions remain subject to NEPA review.

§ 1506.12 Effective date.

The effective date of these regulations is July 30, 1979, except that for agencies that administer programs that qualify under section 102(2)(D) of the Act or under section 104(h) of the Housing and Community Development Act of 1974 an additional four months shall be allowed for the State or local agencies to adopt their implementing procedures.

(a) These regulations shall apply to the fullest extent practicable to ongoing activities and environmental documents begun before the effective date. These regulations do not apply to an environmental impact statement or supplement if the draft statement was filed before the effective date of these regulations. No completed environmental documents need be redone by reasons of these regulations. Until these regulations are applicable, the Council's guidelines published in the FEDERAL REGISTER of August 1, 1973, shall continue to be applicable. In cases where these regulations are applicable the guidelines are superseded. However, nothing shall prevent an agency from proceeding under these regulations at an earlier time.

(b) NEPA shall continue to be applicable to actions begun before January 1, 1970, to the fullest extent possible.

PART 1507—AGENCY COMPLIANCE

Sec.
1507.1 Compliance.
1507.2 Agency capability to comply.
1507.3 Agency procedures.

AUTHORITY: NEPA, the Environmental Quality Improvement Act of 1970, as amended (42 U.S.C. 4371 *et seq.*), sec. 309 of the Clean Air Act, as amended (42 U.S.C. 7609), and E.O. 11514 (Mar. 5, 1970, as amended by E.O. 11991, May 24, 1977).

SOURCE: 43 FR 56002, Nov. 29, 1978, unless otherwise noted.

§ 1507.1 Compliance.

All agencies of the Federal Government shall comply with these regulations. It is the intent of these regulations to allow each agency flexibility in adapting its implementing procedures authorized by § 1507.3 to the requirements of other applicable laws.

§ 1507.2 Agency capability to comply.

Each agency shall be capable (in terms of personnel and other resources) of complying with the requirements enumerated below. Such compliance may include use of other's resources, but the using agency shall itself have sufficient capability to evaluate what others do for it. Agencies shall:

(a) Fulfill the requirements of section 102(2)(A) of the Act to utilize a systematic, interdisciplinary approach which will insure the integrated use of the natural and social sciences and the environmental design arts in planning and in decisionmaking which may have an impact on the human environment. Agencies shall designate a person to be responsible for overall review of agency NEPA compliance.

(b) Identify methods and procedures required by section 102(2)(B) to insure that presently unquantified environmental amenities and values may be given appropriate consideration.

(c) Prepare adequate environmental impact statements pursuant to section 102(2)(C) and comment on statements

in the areas where the agency has jurisdiction by law or special expertise or is authorized to develop and enforce environmental standards.

(d) Study, develop, and describe alternatives to recommended courses of action in any proposal which involves unresolved conflicts concerning alternative uses of available resources. This requirement of section 102(2)(E) extends to all such proposals, not just the more limited scope of section 102(2)(C)(iii) where the discussion of alternatives is confined to impact statements.

(e) Comply with the requirements of section 102(2)(H) that the agency initiate and utilize ecological information in the planning and development of resource-oriented projects.

(f) Fulfill the requirements of sections 102(2)(F), 102(2)(G), and 102(2)(I), of the Act and of Executive Order 11514, Protection and Enhancement of Environmental Quality, Sec. 2.

§ 1507.3 Agency procedures.

(a) Not later than eight months after publication of these regulations as finally adopted in the FEDERAL REGISTER, or five months after the establishment of an agency, whichever shall come later, each agency shall as necessary adopt procedures to supplement these regulations. When the agency is a department, major subunits are encouraged (with the consent of the department) to adopt their own procedures. Such procedures shall not paraphrase these regulations. They shall confine themselves to implementing procedures. Each agency shall consult with the Council while developing its procedures and before publishing them in the FEDERAL REGISTER for comment. Agencies with similar programs should consult with each other and the Council to coordinate their procedures, especially for programs requesting similar information from applicants. The procedures shall be adopted only after an opportunity for public review and after review by the Council for conformity with the Act and these regulations. The Council shall complete its review within 30 days. Once in effect they shall be filed with the Council and made readily available to the public. Agencies are encouraged to publish explanatory guidance for these regulations and their own procedures. Agencies shall continue to review their policies and procedures and in consultation with the Council to revise them as necessary to ensure full compliance with the purposes and provisions of the Act.

(b) Agency procedures shall comply with these regulations except where compliance would be inconsistent with statutory requirements and shall include:

(1) Those procedures required by §§ 1501.2(d), 1502.9(c)(3), 1505.1, 1506.6(e), and 1508.4.

(2) Specific criteria for and identification of those typical classes of action:

(i) Which normally do require environmental impact statements.

(ii) Which normally do not require either an environmental impact statement or an environmental assessment (categorical exclusions (§ 1508.4)).

(iii) Which normally require environmental assessments but not necessarily environmental impact statements.

(c) Agency procedures may include specific criteria for providing limited exceptions to the provisions of these regulations for classified proposals. They are proposed actions which are specifically authorized under criteria established by an Executive Order or statute to be kept secret in the interest of national defense or foreign policy and are in fact properly classified pursuant to such Executive Order or statute. Environmental assessments and environmental impact statements which address classified proposals may be safeguarded and restricted from public dissemination in accordance with agencies' own regulations applicable to classified information. These documents may be organized so that classified portions can be included as annexes, in order that the unclassified portions can be made available to the public.

(d) Agency procedures may provide for periods of time other than those presented in § 1506.10 when necessary to comply with other specific statutory requirements.

(e) Agency procedures may provide that where there is a lengthy period between the agency's decision to prepare an environmental impact statement

and the time of actual preparation, the notice of intent required by § 1501.7 may be published at a reasonable time in advance of preparation of the draft statement.

PART 1508—TERMINOLOGY AND INDEX

Sec.
1508.1 Terminology.
1508.2 Act.
1508.3 Affecting.
1508.4 Categorical exclusion.
1508.5 Cooperating agency.
1508.6 Council.
1508.7 Cumulative impact.
1508.8 Effects.
1508.9 Environmental assessment.
1508.10 Environmental document.
1508.11 Environmental impact statement.
1508.12 Federal agency.
1508.13 Finding of no significant impact.
1508.14 Human environment.
1508.15 Jurisdiction by law.
1508.16 Lead agency.
1508.17 Legislation.
1508.18 Major Federal action.
1508.19 Matter.
1508.20 Mitigation.
1508.21 NEPA process.
1508.22 Notice of intent.
1508.23 Proposal.
1508.24 Referring agency.
1508.25 Scope.
1508.26 Special expertise.
1508.27 Significantly.
1508.28 Tiering.

AUTHORITY: NEPA, the Environmental Quality Improvement Act of 1970, as amended (42 U.S.C. 4371 *et seq.*), sec. 309 of the Clean Air Act, as amended (42 U.S.C. 7609), and E.O. 11514 (Mar. 5, 1970, as amended by E.O. 11991, May 24, 1977).

SOURCE: 43 FR 56003, Nov. 29, 1978, unless otherwise noted.

§ 1508.1 Terminology.

The terminology of this part shall be uniform throughout the Federal Government.

§ 1508.2 Act.

Act means the National Environmental Policy Act, as amended (42 U.S.C. 4321, *et seq.*) which is also referred to as ''NEPA.''

§ 1508.3 Affecting.

Affecting means will or may have an effect on.

§ 1508.4 Categorical exclusion.

Categorical exclusion means a category of actions which do not individually or cumulatively have a significant effect on the human environment and which have been found to have no such effect in procedures adopted by a Federal agency in implementation of these regulations (§ 1507.3) and for which, therefore, neither an environmental assessment nor an environmental impact statement is required. An agency may decide in its procedures or otherwise, to prepare environmental assessments for the reasons stated in § 1508.9 even though it is not required to do so. Any procedures under this section shall provide for extraordinary circumstances in which a normally excluded action may have a significant environmental effect.

§ 1508.5 Cooperating agency.

Cooperating agency means any Federal agency other than a lead agency which has jurisdiction by law or special expertise with respect to any environmental impact involved in a proposal (or a reasonable alternative) for legislation or other major Federal action significantly affecting the quality of the human environment. The selection and responsibilities of a cooperating agency are described in § 1501.6. A State or local agency of similar qualifications or, when the effects are on a reservation, an Indian Tribe, may by agreement with the lead agency become a cooperating agency.

§ 1508.6 Council.

Council means the Council on Environmental Quality established by title II of the Act.

§ 1508.7 Cumulative impact.

Cumulative impact is the impact on the environment which results from the incremental impact of the action when added to other past, present, and reasonably foreseeable future actions regardless of what agency (Federal or non-Federal) or person undertakes such other actions. Cumulative impacts can result from individually minor but collectively significant actions taking place over a period of time.

§ 1508.8 Effects.

Effects include:

(a) Direct effects, which are caused by the action and occur at the same time and place.

(b) Indirect effects, which are caused by the action and are later in time or farther removed in distance, but are still reasonably foreseeable. Indirect effects may include growth inducing effects and other effects related to induced changes in the pattern of land use, population density or growth rate, and related effects on air and water and other natural systems, including ecosystems.

Effects and impacts as used in these regulations are synonymous. Effects includes ecological (such as the effects on natural resources and on the components, structures, and functioning of affected ecosystems), aesthetic, historic, cultural, economic, social, or health, whether direct, indirect, or cumulative. Effects may also include those resulting from actions which may have both beneficial and detrimental effects, even if on balance the agency believes that the effect will be beneficial.

§ 1508.9 Environmental assessment.

Environmental assessment:

(a) Means a concise public document for which a Federal agency is responsible that serves to:

(1) Briefly provide sufficient evidence and analysis for determining whether to prepare an environmental impact statement or a finding of no significant impact.

(2) Aid an agency's compliance with the Act when no environmental impact statement is necessary.

(3) Facilitate preparation of a statement when one is necessary.

(b) Shall include brief discussions of the need for the proposal, of alternatives as required by section 102(2)(E), of the environmental impacts of the proposed action and alternatives, and a listing of agencies and persons consulted.

§ 1508.10 Environmental document.

Environmental document includes the documents specified in § 1508.9 (environmental assessment), § 1508.11 (environmental impact statement), § 1508.13 (finding of no significant impact), and § 1508.22 (notice of intent).

§ 1508.11 Environmental impact statement.

Environmental impact statement means a detailed written statement as required by section 102(2)(C) of the Act.

§ 1508.12 Federal agency.

Federal agency means all agencies of the Federal Government. It does not mean the Congress, the Judiciary, or the President, including the performance of staff functions for the President in his Executive Office. It also includes for purposes of these regulations States and units of general local government and Indian tribes assuming NEPA responsibilities under section 104(h) of the Housing and Community Development Act of 1974.

§ 1508.13 Finding of no significant impact.

Finding of no significant impact means a document by a Federal agency briefly presenting the reasons why an action, not otherwise excluded (§ 1508.4), will not have a significant effect on the human environment and for which an environmental impact statement therefore will not be prepared. It shall include the environmental assessment or a summary of it and shall note any other environmental documents related to it (§ 1501.7(a)(5)). If the assessment is included, the finding need not repeat any of the discussion in the assessment but may incorporate it by reference.

§ 1508.14 Human environment.

Human environment shall be interpreted comprehensively to include the natural and physical environment and the relationship of people with that environment. (See the definition of ''effects'' (§ 1508.8).) This means that economic or social effects are not intended by themselves to require preparation of an environmental impact statement. When an environmental impact statement is prepared and economic or social and natural or physical environmental effects are interrelated, then the environmental impact statement

will discuss all of these effects on the human environment.

§ 1508.15 Jurisdiction by law.

Jurisdiction by law means agency authority to approve, veto, or finance all or part of the proposal.

§ 1508.16 Lead agency.

Lead agency means the agency or agencies preparing or having taken primary responsibility for preparing the environmental impact statement.

§ 1508.17 Legislation.

Legislation includes a bill or legislative proposal to Congress developed by or with the significant cooperation and support of a Federal agency, but does not include requests for appropriations. The test for significant cooperation is whether the proposal is in fact predominantly that of the agency rather than another source. Drafting does not by itself constitute significant cooperation. Proposals for legislation include requests for ratification of treaties. Only the agency which has primary responsibility for the subject matter involved will prepare a legislative environmental impact statement.

§ 1508.18 Major Federal action.

Major Federal action includes actions with effects that may be major and which are potentially subject to Federal control and responsibility. Major reinforces but does not have a meaning independent of significantly (§ 1508.27). Actions include the circumstance where the responsible officials fail to act and that failure to act is reviewable by courts or administrative tribunals under the Administrative Procedure Act or other applicable law as agency action.

(a) Actions include new and continuing activities, including projects and programs entirely or partly financed, assisted, conducted, regulated, or approved by federal agencies; new or revised agency rules, regulations, plans, policies, or procedures; and legislative proposals (§§ 1506.8, 1508.17). Actions do not include funding assistance solely in the form of general revenue sharing funds, distributed under the State and Local Fiscal Assistance Act of 1972, 31 U.S.C. 1221 *et seq.*, with no Federal agency control over the subsequent use of such funds. Actions do not include bringing judicial or administrative civil or criminal enforcement actions.

(b) Federal actions tend to fall within one of the following categories:

(1) Adoption of official policy, such as rules, regulations, and interpretations adopted pursuant to the Administrative Procedure Act, 5 U.S.C. 551 *et seq.;* treaties and international conventions or agreements; formal documents establishing an agency's policies which will result in or substantially alter agency programs.

(2) Adoption of formal plans, such as official documents prepared or approved by federal agencies which guide or prescribe alternative uses of Federal resources, upon which future agency actions will be based.

(3) Adoption of programs, such as a group of concerted actions to implement a specific policy or plan; systematic and connected agency decisions allocating agency resources to implement a specific statutory program or executive directive.

(4) Approval of specific projects, such as construction or management activities located in a defined geographic area. Projects include actions approved by permit or other regulatory decision as well as federal and federally assisted activities.

§ 1508.19 Matter.

Matter includes for purposes of part 1504:

(a) With respect to the Environmental Protection Agency, any proposed legislation, project, action or regulation as those terms are used in section 309(a) of the Clean Air Act (42 U.S.C. 7609).

(b) With respect to all other agencies, any proposed major federal action to which section 102(2)(C) of NEPA applies.

§ 1508.20 Mitigation.

Mitigation includes:

(a) Avoiding the impact altogether by not taking a certain action or parts of an action.

(b) Minimizing impacts by limiting the degree or magnitude of the action and its implementation.

(c) Rectifying the impact by repairing, rehabilitating, or restoring the affected environment.

(d) Reducing or eliminating the impact over time by preservation and maintenance operations during the life of the action.

(e) Compensating for the impact by replacing or providing substitute resources or environments.

§ 1508.21 NEPA process.

NEPA process means all measures necessary for compliance with the requirements of section 2 and title I of NEPA.

§ 1508.22 Notice of intent.

Notice of intent means a notice that an environmental impact statement will be prepared and considered. The notice shall briefly:

(a) Describe the proposed action and possible alternatives.

(b) Describe the agency's proposed scoping process including whether, when, and where any scoping meeting will be held.

(c) State the name and address of a person within the agency who can answer questions about the proposed action and the environmental impact statement.

§ 1508.23 Proposal.

Proposal exists at that stage in the development of an action when an agency subject to the Act has a goal and is actively preparing to make a decision on one or more alternative means of accomplishing that goal and the effects can be meaningfully evaluated. Preparation of an environmental impact statement on a proposal should be timed (§ 1502.5) so that the final statement may be completed in time for the statement to be included in any recommendation or report on the proposal. A proposal may exist in fact as well as by agency declaration that one exists.

§ 1508.24 Referring agency.

Referring agency means the federal agency which has referred any matter to the Council after a determination that the matter is unsatisfactory from the standpoint of public health or welfare or environmental quality.

§ 1508.25 Scope.

Scope consists of the range of actions, alternatives, and impacts to be considered in an environmental impact statement. The scope of an individual statement may depend on its relationships to other statements (§§1502.20 and 1508.28). To determine the scope of environmental impact statements, agencies shall consider 3 types of actions, 3 types of alternatives, and 3 types of impacts. They include:

(a) Actions (other than unconnected single actions) which may be:

(1) Connected actions, which means that they are closely related and therefore should be discussed in the same impact statement. Actions are connected if they:

(i) Automatically trigger other actions which may require environmental impact statements.

(ii) Cannot or will not proceed unless other actions are taken previously or simultaneously.

(iii) Are interdependent parts of a larger action and depend on the larger action for their justification.

(2) Cumulative actions, which when viewed with other proposed actions have cumulatively significant impacts and should therefore be discussed in the same impact statement.

(3) Similar actions, which when viewed with other reasonably foreseeable or proposed agency actions, have similarities that provide a basis for evaluating their environmental consequencies together, such as common timing or geography. An agency may wish to analyze these actions in the same impact statement. It should do so when the best way to assess adequately the combined impacts of similar actions or reasonable alternatives to such actions is to treat them in a single impact statement.

(b) Alternatives, which include:

(1) No action alternative.

(2) Other reasonable courses of actions.

(3) Mitigation measures (not in the proposed action).

(c) Impacts, which may be: (1) Direct; (2) indirect; (3) cumulative.

§ 1508.26 Special expertise.

Special expertise means statutory responsibility, agency mission, or related program experience.

§ 1508.27 Significantly.

Significantly as used in NEPA requires considerations of both context and intensity:

(a) *Context*. This means that the significance of an action must be analyzed in several contexts such as society as a whole (human, national), the affected region, the affected interests, and the locality. Significance varies with the setting of the proposed action. For instance, in the case of a site-specific action, significance would usually depend upon the effects in the locale rather than in the world as a whole. Both short- and long-term effects are relevant.

(b) *Intensity*. This refers to the severity of impact. Responsible officials must bear in mind that more than one agency may make decisions about partial aspects of a major action. The following should be considered in evaluating intensity:

(1) Impacts that may be both beneficial and adverse. A significant effect may exist even if the Federal agency believes that on balance the effect will be beneficial.

(2) The degree to which the proposed action affects public health or safety.

(3) Unique characteristics of the geographic area such as proximity to historic or cultural resources, park lands, prime farmlands, wetlands, wild and scenic rivers, or ecologically critical areas.

(4) The degree to which the effects on the quality of the human environment are likely to be highly controversial.

(5) The degree to which the possible effects on the human environment are highly uncertain or involve unique or unknown risks.

(6) The degree to which the action may establish a precedent for future actions with significant effects or represents a decision in principle about a future consideration.

(7) Whether the action is related to other actions with individually insignificant but cumulatively significant impacts. Significance exists if it is reasonable to anticipate a cumulatively significant impact on the environment. Significance cannot be avoided by terming an action temporary or by breaking it down into small component parts.

(8) The degree to which the action may adversely affect districts, sites, highways, structures, or objects listed in or eligible for listing in the National Register of Historic Places or may cause loss or destruction of significant scientific, cultural, or historical resources.

(9) The degree to which the action may adversely affect an endangered or threatened species or its habitat that has been determined to be critical under the Endangered Species Act of 1973.

(10) Whether the action threatens a violation of Federal, State, or local law or requirements imposed for the protection of the environment.

[43 FR 56003, Nov. 29, 1978; 44 FR 874, Jan. 3, 1979]

§ 1508.28 Tiering.

Tiering refers to the coverage of general matters in broader environmental impact statements (such as national program or policy statements) with subsequent narrower statements or environmental analyses (such as regional or basinwide program statements or ultimately site-specific statements) incorporating by reference the general discussions and concentrating solely on the issues specific to the statement subsequently prepared. Tiering is appropriate when the sequence of statements or analyses is:

(a) From a program, plan, or policy environmental impact statement to a program, plan, or policy statement or analysis of lesser scope or to a site-specific statement or analysis.

(b) From an environmental impact statement on a specific action at an early stage (such as need and site selection) to a supplement (which is preferred) or a subsequent statement or analysis at a later stage (such as environmental mitigation). Tiering in such cases is appropriate when it helps the lead agency to focus on the issues which are ripe for decision and exclude from consideration issues already decided or not yet ripe.

PART 1515—FREEDOM OF INFORMATION ACT PROCEDURES

PURPOSE

Sec.
1515.1 What are these procedures?

ORGANIZATION OF CEQ

1515.2 What is the Council on Environmental Quality (CEQ)?
1515.3 How is CEQ organized?

PROCEDURES FOR REQUESTING RECORDS

1515.5 How to make a Freedom of Information Act request.

AVAILABILITY OF INFORMATION

1515.10 What information is available, and how can it be obtained?

COSTS

1515.15 What fees may be charged, and how should they be paid?

AUTHORITY: 5 U.S.C. 552, as amended by Pub. L. 93–502.

SOURCE: 42 FR 65158, Dec. 30, 1977, unless otherwise noted.

PURPOSE

§ 1515.1 What are these procedures?

The Freedom of Information Act (5 U.S.C. 552, commonly known as FOIA) is a law which creates a procedure for any person to request official documents and other records from United States Government agencies. The law requires every Federal agency to make available to the public the material requested, unless the material falls under one of the limited exceptions stated in section 552(b)(5) of the Act, and the agency has good reason to refuse the request. These procedures explain how the Council on Environmental Quality—one of several offices in the Executive Office of the President—will carry out the Freedom of Information Act. They are written from the standpoint of a member of the public requesting material from the Council.

ORGANIZATION OF CEQ

§ 1515.2 What is the Council on Environmental Quality (CEQ)?

(a) The Council on Environmental Quality (''CEQ'' or ''the Council'') was created by the National Environmental Policy Act of 1969, as amended (42 U.S.C. 4321 through 4347). The Council's authority is derived from that Act, the Environmental Quality Improvement Act of 1970, as amended (42 U.S.C. 4371–4374), Reorganization Plan No. 1 of 1977 (July 15, 1977), and Executive Order 11514, Protection and Enhancement of Environmental Quality, March 5, 1970, as amended by Executive Order 11991, May 24, 1977.

(b) The Council's primary responsibilities include the following:

(1) To review and evaluate the programs and activities of the Federal Government to determine how they are contributing to the attainment of the national environmental policy;

(2) To assist Federal agencies and departments in appraising the effectiveness of their existing and proposed facilities, programs, policies, and activities affecting environmental quality;

(3) To develop and recommend to the President policies to improve environmental quality to meet the conservation, social, economic, health, and other requirements and goals of the Nation;

(4) To advise and assist the President in achieving international cooperation for dealing with environmental problems;

(5) To assist in coordinating among Federal agencies and departments those programs which affect, protect, and improve environmental quality, including Federal compliance with the environmental impact statement process, and to seek resolution of significant environmental issues;

(6) To foster research relating to environmental quality and the impacts of new or changing technologies; and

(7) To analyze long and short term environmental problems and trends and assist in preparing an annual Environmental Quality Report to the President and the Congress.

(c) The Council maintains a ''Quarterly Index'' which lists its current policies and procedures, as required by section 552(a)(2) of the Freedom of Information Act. This index is updated and published in the FEDERAL REGISTER quarterly, starting in 1976. The Quarterly Index—and the specific items listed in the index—are available on request from the Freedom of Information Officer. You may also inspect or copy

any of these materials at the Council's office during the hours stated below in § 1515.3(f).

§ 1515.3 How is CEQ organized?

(a) The Council is made up of three members appointed by the President and subject to approval by the Senate. One member is designated as chairman by the President. All three serve in a full-time capacity.

(b) The National Environmental Policy Act and the Environmental Quality Improvement Act give the Council the authority to hire any officers and staff that may be necessary to carry out responsibilities and functions specified in these two Acts. Also, the use of consultants and experts is permitted.

(c) In addition to the three members, the Council has program and legal staff.

(d) The Council has no field or regional offices.

(e) The Council has a public affairs office which is responsible for providing information to the general public, the Congress, and the press. If you are interested in general information about the Council or have questions about the Council's recent activities or policy positions, you should call this office at (202) 633–7005 or write to the ''Public Affairs Office'' of the Council at the address given in the next paragraph.

NOTE: The CEQ public affairs office can respond fully and promptly to most questions you may have; the Council suggests that the Freedom of Information Act procedures be used when you are seeking a specific document and have had difficulty obtaining it.

(f) The Council is located at 722 Jackson Place NW., Washington, DC 20006. Office hours are 9–5:30, Monday through Friday, except legal holidays. If you wish to meet with any of the staff, please write or phone ahead for an appointment. The main number is 202–633–7027.

PROCEDURES FOR REQUESTING RECORDS

§ 1515.5 How to make a Freedom of Information Act request.

(a) The Chairman has appointed a Freedom of Information Officer who will be responsible for overseeing the Council's administration of the Freedom of Information Act and for receiving, routing, and overseeing the processing of all Freedom of Information requests. The Chairman has also appointed an Appeals Officer who is responsible for processing any appeals.

(b) *Requesting information from the Council.* (1) When you make a Freedom of Information Act request to the Council, the Freedom of Information Officer shall decide how to respond to—or ''make an initial determination on''—your request within 10 working days from the date the Officer receives the request. The Freedom of Information Officer will then provide you with written notification of the determination.

(2) You can make a Freedom of Information Act request by writing a letter which states that you are making a Freedom of Information Act request. Address your letter to:

Freedom of Information Officer, Council on Environmental Quality, Executive Office of the President, 722 Jackson Place NW., Washington, DC 20006.

(3) In your request you should identify the desired record or reasonably describe it. The request should be as specific as possible so that the item can be readily found. You should not make blanket requests, such as requests for ''the entire file of'' or ''all materials relating to'' a specified subject.

(4) The Council will make a reasonable effort to assist you in defining the request to eliminate extraneous and unwanted materials and to keep search and copying fees to a minimum. If you have budgetary constraints and anticipate that your request might be costly you may wish to indicate the maximum fee you are prepared to pay for acquiring the information. (See § 1515.15(c) also.)

(5) The 10 day period for making a determination on a request will begin when the records reqested are specified or reasonably identifiable.

(6) Despite its name, the Freedom of Information Act does not require a government agency to create or research information that you would like or that you may think the agency should have. The Act only requres that existing records be made available to the public.

(c) *Council's response to a request.* (1) Upon receipt of any request under the Act, the Freedom of Information Officer shall direct the request to the appropriate staff member at the Council, who will review the request and advise the Freedom of Information Officer as soon as possible.

(2) If it is appropriate to grant the request, the staff member will immediately collect the requested materials in order to accompany, wherever possible, the Freedom of Information Officer's letter notifying you of the decision.

(3) If your request is denied, in part or in full, the letter notifying you of the decision will be signed by the Freedom of Information Officer, and will include the names of any other individuals who participated in the decision. The letter will include the reasons for any denial and the procedure for filing an appeal.

(d) *Appeals.* (1) If you are not satisfied with the response you have received from the Freedom of Information Officer, you may ask the Council to reconsider the decision. You should explain what material you still wish to receive, and why you believe the Council should disclose this to you. This is called an ''appeal.'' You must make you appeal within 45 days of the date on the letter which denied your request.

(2) You can make an appeal by writing a letter to:

FOIA Appeals Officer, Council on Environmental Quality, Executive Office of the President, 722 Jackson Place NW., Washington, DC 20006.

(3) Your letter should specify the records being requested and ask the Appeals Officer to review the determination made by the Freedom of Information Officer. The letter should explain the basis for the appeal.

(4) The Appeals Officer shall decide the appeal—or ''make a final determination''—within 20 working days from the date the Officer receives the appeal. The Appeals Officer (or designee) will send you a letter informing you of the decision as soon as it is made. If the Appeals Officer denies your request, in part or in whole, the letter will also notify you of the provisions for judicial review and the names of any persons who participated in the final determination of the appeal.

(e) *Extending the Council's time to respond.* In unusual circumstances, the time limits for response to your request (paragraphs (b) and (d) of this section) may be extended by the Council for not more than 10 working days. Extensions may be granted by the Freedom of Information Officer in the case of initial requests and by the Appeals Officer in the case of any appeals. The extension period may be split between the initial request and the appeal but may not exceed 10 working days overall. Any extension will be made or confirmed to you in writing and will set forth the reasons for the extension and the date that the final determination is expected. The term ''unusual circumstances'' means:

(i) The need to search for and collect the requested records from * * * establishments that are separate from the office processing the request;

(ii) The need to search for, collect, and appropriately examine a voluminous amount of separate and distinct records which are demanded in a single request; or

(iii) The need for consultation, which shall be conducted with all practicable speed, with another agency having a substantial interest in the determination of the request or among two or more components of the agency having substantial subject-matter interest therein.

(5 U.S.C. 552(a)(6)(B))

AVAILABILITY OF INFORMATION

§ 1515.10 What information is available, and how can it be obtained?

(a) When a request for information has been approved, in whole or in part, you may make an appointment to inspect or copy the materials requested during regular business hours by writing or telephoning the Freedom of Information Officer at the address or phone number given in § 1515.3(f). You may be charged reasonable fees for copying materials, as explained by § 1515.15. The Council on Environmental Quality will permit copying of any available material but will reserve the right to limit the number of copies

made with the Council's copying facilities.

(b) In general, all records of the Council are available to the public, as required by the Freedom of Information Act. The Council claims the right, where it is applicable, to withhold material under the provisions specified in the Freedom of Information Act as amended (5 U.S.C. 552(b)).

(c) The legislative history of the establishment of the Council states that the Congress intended the Council to be a confidential advisor to the President on matters of environmental policy. Therefore, members of the public should presume that communications between the Council and the President (and their staffs) are confidential and ordinarily will not be released; they will usually fall, at a minimum, within Exemption 5 of the Act. The Freedom of Information Officer shall review each request, however, to determine whether the record is exclusively factual or may have factual portions which may be reasonably segregated and made available to the requester. Furthermore, on the recommendation of the FOIA Officer or Appeals Officer, the Council will consider the release of an entire record, even if it comes within an exemption or contains policy advice, if its disclosure would not impair Executive policymaking processes or the Council's participation in decision-making.

COSTS

§ 1515.15 What fees may be charged, and how should they be paid?

(a) Following is the schedule of fees you may be charged for the search and reproduction of information available under the Freedom of Information Act, 5 U.S.C. 552, as amended.

(1) *Search for records.* Five dollars per hour when the search is conducted by a clerical employee. Eight dollars per hour when the search is conducted by a professional employee. There will be no charge for searches of less than one hour.

(2) *Duplication of records.* Records will be duplicated at a rate of $0.10 per page for copying of 10 pages or more. There will be no charge for duplicating 9 pages or less.

(3) *Other.* When no specific fee has been established for a service, or the request for a service does not fall under categories (1) and (2), the Administrative Officer is authorized to establish an appropriate fee based on ''direct costs'' as provided in the Freedom of Information Act. Examples of services covered by this provision include searches involving computer time or special travel, transportation, or communication costs.

(b) If the Council anticipates that the fees chargeable under this section will amount to more than $25, or the maximum amount specified in your request, you shall be promptly notified of the amount of the anticipated fee or the closest estimate of the amount. In such instances you will be advised of your option to consult with Council personnel in order to reformulate the request in a manner which will reduce the fees, yet still meet your needs. A reformulated request shall be considered a new request, thus beginning a new 10 working day period for processing.

(c) Fees must be paid in full prior to issuance of the requested copies. In the event you owe money for previous request, copies of records will not be provided for any subsequent request until the debt has been paid in full.

(d) Search costs are due and payable even if the record which was requested cannot be located after all reasonable efforts have been made, or if the FOI Officer determines that a record which has been requested is exempt under the Freedom of Information Act as amended and is to be withheld.

(e) Payment shall be in the form either of a personal check or bank draft drawn on a bank in the United States, or a postal money order. Checks shall be made payable to General Services Administration. You should mail or deliver any payment for services to the Administrative Office, Council on Environmental Quality, 722 Jackson Place NW., Washington, DC 20006.

(f) A receipt for fees paid will be given upon request. Refunds of fees paid for services actually rendered will not be made.

(g) The Council may waive all or part of any fee provided for in this section

when the Freedom of Information Officer (or designee) deems it to be in either the Council's interest or in the general public's interest.

PART 1516—PRIVACY ACT IMPLEMENTATION

Sec.
1516.1 Purpose and scope.
1516.2 Definitions.
1516.3 Procedures for requests pertaining to individual records in a record system.
1516.4 Times, places, and requirements for the identification of the individual making a request.
1516.5 Disclosure of requested information to the individual.
1516.6 Request for correction or amendment to the record.
1516.7 Agency review of request for correction or amendment of the record.
1516.8 Appeal of an initial adverse agency determination on correction or amendment of the record.
1516.9 Disclosure of a record to a person other than the individual to whom the record pertains.
1516.10 Fees.

AUTHORITY: 5 U.S.C. 552a; Pub. L. 93–579.

SOURCE: 42 FR 32537, June 27, 1977, unless otherwise noted.

§ 1516.1 Purpose and scope.

The purposes of these regulations are to:

(a) Establish a procedure by which an individual can determine if the Council on Environmental Quality (hereafter known as the Council) maintains a system of records which includes a record pertaining to the individual; and

(b) Establish a procedure by which an individual can gain access to a record pertaining to him or her for the purpose of review, amendment and/or correction.

§ 1516.2 Definitions.

For the purpose of these regulations:

(a) The term *individual* means a citizen of the United States or an alien lawfully admitted for permanent residence;

(b) The term *maintain* means maintain, collect, use or disseminate;

(c) The term *record* means any item or collection or grouping of information about an individual that is maintained by the Council (including, but not limited to, his or her employment history, payroll information, and financial transactions), and that contains his or her name, or an identifying number, symbol, or other identifying particular assigned to the individual such as a social security number;

(d) The term *system of records* means a group of any records under the control of the Council from which information is retrieved by the name of the individual or by some identifying number, symbol, or other identifying particular assigned to the individual; and

(e) The term *routine use* means with respect to the disclosure of a record, the use of such record for a purpose which is compatible with the purpose for which it was collected.

§ 1516.3 Procedures for requests pertaining to individual records in a record system.

An individual shall submit a written request to the Administrative Officer of the Council to determine if a system of records named by the individual contains a record pertaining to the individual. The individual shall submit a written request to the Administrative Officer of the Council which states the individual's desire to review his or her record. The Administrative Officer of the Council is available to answer questions regarding these regulations and to provide assistance in locating records in the Council's system of records.

[42 FR 32537, June 27, 1977; 42 FR 35960, July 13, 1977]

§ 1516.4 Times, places, and requirements for the identification of the individual making a request.

An individual making a request to the Administrative Officer of the Council pursuant to § 1516.3 shall present the request at the Council's office, 722 Jackson Place NW., Washington, DC 20006, on any business day between the hours of 9 a.m. and 5 p.m. and should be prepared to identify himself by signature. Requests will also be accepted in writing if mailed to the Council's offices and signed by the requester.

§ 1516.5 Disclosure of requested information to the individual.

Upon verification of identity, the Council shall disclose to the individual the information contained in the record which pertains to that individual.

(a) The individual may be accompanied for this purpose by a person of his choosing.

(b) Upon request of the individual to whom the record pertains, all information in the accounting of disclosures will be made available.

[42 FR 35960, July 13, 1977]

§ 1516.6 Request for correction or amendment to the record.

The individual may submit a request to the Administrative Officer of the Council which states the individual's desire to correct or to amend his or her record. This request must be made in accordance with the procedures of § 1516.4 and shall describe in detail the change which is requested.

[42 FR 32537, June 27, 1977. Redesignated at 42 FR 35960, July 13, 1977]

§ 1516.7 Agency review of request for correction or amendment of the record.

Within ten working days of the receipt of a request to correct or to amend a record, the Administrative Officer of the Council will acknowledge in writing such receipt and promptly either:

(a) Make any correction or amendment of any portion thereof which the individual believes is not accurate, relevant, timely, or complete; or

(b) Inform the individual of his or her refusal to correct or amend the record in accordance with the request, the reason for the refusal, and the procedure established by the Council for the individual to request a review of that refusal.

§ 1516.8 Appeal of an initial adverse agency determination on correction or amendment of the record.

An individual may appeal refusal by the Administrative Officer of the Council to correct or to amend his or her record by submitting a request for a review of such refusal to the General Counsel, Council on Environmental Quality, 722 Jackson Place NW., Washington, DC 20006. The General Counsel shall, not later than thirty working days from the date on which the individual requests such a review, complete such review and make a final determination unless, for good cause shown, the General Counsel extends such thirty day period. If, after his or her review, the General Counsel also refuses to correct or to amend the record in accordance with the request, the individual may file with the Council a concise statement setting forth the reasons for his or her disagreement with the General Counsel's decision and may seek judicial relief under 5 U.S.C. 552a(g)(1)(A).

§ 1516.9 Disclosure of a record to a person other than the individual to whom the record pertains.

The Council will not disclose a record to any individual other than to the individual to whom the record pertains without receiving the prior written consent of the individual to whom the record pertains, unless the disclosure either has been listed as a ''routine use'' in the Council's notices of its systems of records or falls within the special conditions of disclosure set forth in section 3 of the Privacy Act of 1974.

§ 1516.10 Fees.

If an individual requests copies of his or her record, he or she shall be charged ten cents per page, excluding the cost of any search for the record, in advance of receipt of the pages.

PART 1517—PUBLIC MEETING PROCEDURES OF THE COUNCIL ON ENVIRONMENTAL QUALITY

Sec.
1517.1 Policy and scope.
1517.2 Definitions.
1517.3 Open meeting requirement.
1517.4 Exceptions.
1517.5 Procedure for closing meetings.
1517.6 Notice of meetings.
1517.7 Records of closed meetings.

AUTHORITY: 5 U.S.C. 552b(g); Pub. L. 94–409.

SOURCE: 42 FR 20818, Apr. 22, 1977, unless otherwise noted.

§ 1517.1 Policy and scope.

Consistent with the policy that the public is entitled to the fullest information regarding the decisionmaking processes of the Federal Government, it is the purpose of this part to open the meetings of the Council on Environmental Quality to public observation while protecting the rights of individuals and the ability of the Council to carry out its primary responsibility of providing advice to the President. Actions taken by the Chairman acting as Director of the Office of Environmental Quality and Council actions involving advice to the President when such advice is not formulated collegially during a meeting are outside the scope of this part. In addition to conducting the meetings required by this part, it is the Council's policy to conduct, open to public observation, periodic meetings involving Council discussions of Council business, including where appropriate, matters outside the scope of this part. This part does not affect the procedures set forth in part 1515 pursuant to which records of the Council are made available to the public for inspection and copying, except that the exemptions set forth in § 1517.4(a) shall govern in the case of any request made to copy or inspect the transcripts, recording or minutes described in § 1517.7.

[47 FR 6277, Feb. 11, 1982]

§ 1517.2 Definitions.

For the purpose of this part:

(a) The term *Council* shall mean the Council on Environmental Quality established under title II of the National Environmental Policy Act of 1969 (42 U.S.C. 4321 through 4347).

(b) The term *meeting* means the deliberations of at least two Council members where such deliberations determine or result in the joint conduct or disposition of official collegial Council business, but does not include deliberations to take actions to open or close a meeting under §§ 1517.4 and 1517.5 or to release or withhold information under §§ 1517.4 and 1517.7. ''Meeting'' shall not be construed to prevent Council members from considering individually Council business that is circulated to them sequentially in writing.

(c) *Director* means the Chairman of the Council on Environmental Quality acting as the head of the Office of Environmental Quality pursuant to the Environmental Quality Improvement Act of 1970, Pub. L. 91–224, 42 U.S.C. 4371 through 4374.

[44 FR 34946, June 18, 1979, as amended at 47 FR 6277, Feb. 11, 1982]

§ 1517.3 Open meeting requirement.

(a) Every portion of every meeting of the Council is open to public observation subject to the exemptions provided in § 1517.4. Members of the Council may not jointly conduct or dispose of the business of the Council other than in accordance with this part.

(b) The Council will conduct open to public observation periodic meetings involving Council discussions of Council business including where appropriate matters outside the scope of this part. Such meetings will be noticed pursuant to § 1517.6.

(c) Members of the public may attend open meetings of the Council for the sole purpose of observation and may not participate in or photograph any meeting without prior permission of the Council. Members of the public who desire to participate in or photograph an open meeting of the Council may request permission to do so from the General Counsel of the Council before such meeting. Members of the public may record open meetings of the Council by means of any mechanical or electronic device unless the Council determines such recording would disrupt the orderly conduct of such meeting.

[44 FR 34946, June 18, 1979, as amended at 47 FR 6277, Feb. 11, 1982]

§ 1517.4 Exceptions.

(a) A meeting or portion thereof may be closed to public observation, and information pertaining to such meeting or portion thereof may be withheld from the public, if the Council determines that such meeting or portion thereof or disclosure of such information is likely to:

(1) Disclose matters that are (i) specifically authorized under criteria established by an Executive order to be kept secret in the interest of national defense or foreign policy and (ii) in fact

properly classified pursuant to that Executive order;

(2) Relate solely to the internal personnel rules and practices of the Council;

(3) Disclose matters specifically exempted from disclosure by statute (other than the Freedom of Information Act, 5 U.S.C. 552), provided that the statute: (i) Requires that the matters be withheld from the public in such a manner as to leave no discretion on the issue, or (ii) establishes particular criteria for withholding or refers to particular types of matters to be withheld;

(4) Disclose the trade secrets and commercial or financial information obtained from a person and privileged or confidential;

(5) Involve accusing any person of a crime, or formally censuring any person;

(6) Disclose information of a personal nature if disclosure would constitute a clearly unwarranted invasion of personal privacy;

(7) Disclose investigatory records compiled for law enforcement purposes, or information which if written would be contained in such records, but only to the extent that the production of those records or information would:

(i) Interfere with enforcement proceedings,

(ii) Deprive a person of a right to a fair trial or an impartial adjudication,

(iii) Constitute an unwarranted invasion of personal privacy,

(iv) Disclose the identity of a confidential source and, in the case of a record compiled by a criminal law enforcement authority in the course of a criminal investigation, or by an agency conducting a lawful national security intelligence investigation, confidential information furnished only by the confidential source,

(v) Disclose investigative techniques and procedures, or,

(vi) Endanger the life or physical safety of law enforcement personnel;

(8) Disclose information contained in or related to examination, operating, or condition reports prepared by, on behalf of, or for the use of an agency responsible for the regulation or supervision of financial institutions;

(9) Disclose information the premature disclosure of which would be likely to significantly frustrate implementation of a proposed action of the Council. This exception shall not apply in any instance where the Council has already disclosed to the public the content or nature of the proposed action, or where the Council is required by law to make such disclosure on its own initiative prior to taking final action on the proposal; or

(10) Specifically concern the issuance of a subpoena by the Council, or the participation of the Council in a civil action or proceeding, an action in a foreign court or international tribunal, or an arbitration, or the initiation, conduct, or disposition by the Council of a particular case of formal adjudication pursuant to the procedures in 5 U.S.C. 554 or otherwise involving a determination on the record after opportunity for a hearing.

(b) Before a meeting is closed to public observation the Council shall determine whether or not the public interest requires that the meeting be open. The Council may open a meeting to public observation which could be closed under paragraph (a) of this section, if the Council finds it to be in the public interest to do so.

§ 1517.5 Procedure for closing meetings.

(a) A majority of the entire membership of the Council may vote to close to public observation a meeting or a portion or portions thereof, or to withhold information pertaining to such meeting. A separate vote of the members of the Council shall be taken with respect to each meeting of the Council, a portion or portions of which are proposed to be closed to the observation of the public or with respect to any information concerning such meetings or portion thereof. A single vote may be taken with respect to a series of meetings, a portion or portions of which are proposed to be closed to the public, or with respect to information concerning such series of meetings, so long as each meeting in such series involves the same particular matters and is scheduled to be held no more than thirty days after the initial meeting in such series. The vote of each member of the

Council participating in a vote shall be recorded and no proxies shall be allowed.

(b) Whenever any person whose interest may be directly affected by a portion of a meeting requests that the Council close that portion to public observation for any of the reasons referred to in § 1517.4(a) the Council, upon request of any of the members of the Council, shall decide by recorded vote whether to close that portion of the meeting.

(c) For every meeting or portion thereof closed under this part, the General Counsel of the Council before such meeting is closed shall publicly certify that, in his or her opinion, the meeting may properly be closed to the public stating each relevant exemptive provision. The Council shall retain a copy of the General Counsel's certification, together with a statement from the presiding officer of the meeting setting forth the time and place of the meeting and listing the persons present.

(d) Within one day of any vote taken on a proposal to close a meeting, the Council shall make publicly available a record reflecting the vote of each member on the question. In addition, within one day of any vote which closes a portion or portions of a meeting to the public, the Council shall make publicly available a full written explanation of its closure action together with a list naming all persons expected to attend and identifying their affiliation, unless such disclosure would reveal the information that the meeting itself was closed to protect.

(e) Following any announcement that the Council intends to close a meeting or portion thereof, any person may make a request that the meeting or portion thereof be opened. Such request shall be made of the Chairman of the Council who shall ensure that the request is circulated to all members of the Council on the same business day on which it is received. The request shall set forth the reasons why the requestor believes the meeting should be open. The Council upon the request of any member or its General Counsel, shall vote on the request.

§ 1517.6 Notice of meetings.

(a) Except as otherwise provided in this section, the Council shall make a public announcement at least one week before a meeting, to include the following:

(1) Time, place, and subject matter of the meeting;

(2) Whether the meeting is to be open or closed; and

(3) Name and telephone number of the official who will respond to requests for information about the meeting.

(b) A majority of the members of the Council may determine by recorded vote that the business of the Council requires a meeting to be called with less than one week's notice. At the earliest practicable time, the Council shall publicly announce the time, place and subject matter of the meeting, and whether or not it is to be open or closed to the public.

(c) If announcement of the subject matter of a closed meeting would reveal the information that the meeting itself was closed to protect, the subject matter shall not be announced.

(d) Following the public announcement required by paragraph (a) or (b) of this section:

(1) A majority of the members of the Council may change the time or place of a meeting. At the earliest practicable time, the Council shall publicly announce the change.

(2) A majority of the entire membership of the Council may change the subject matter of a meeting, or the determination to open or close a meeting to the public, if it determines by a recorded vote that the change is required by the business of the Council and that no earlier announcement of the change was possible. At the earliest practicable time, the Council shall publicly announce the change, and the vote of each member upon the change.

(e) Individuals or organizations having a special interest in activities of the Council may request the Council to place them on a mailing list for receipt of information available under this section.

(f) Following public announcement of a meeting, the time or place of a meeting may be changed only if the change is announced publicly at the earliest

practicable time. The subject matter of a meeting or the determination to open or close a meeting may be changed following public announcement of a meeting only if both of the following conditions are met:

(1) There must be a recorded vote of a majority of the Council that the business of the Council requires the change and that no earlier announcement of such change was possible; and

(2) There must be a public announcement of the change and of the individual Council members' votes at the earliest practicable time.

(g) Immediately following each public announcement required by this section, the following information, as applicable, shall be submitted for publication in the FEDERAL REGISTER.

(1) Notice of the time, place, and subject matter of a meeting;

(2) Whether the meeting is open or closed;

(3) Any change in one of the preceding; and

(4) The name and telephone number of the official who will respond to requests for information about the meeting.

§ 1517.7 Records of closed meetings.

(a) A record of each meeting or portion thereof which is closed to the public shall be made and retained for two years or for one year after the conclusion of any Council proceeding involved in the meeting whichever occurs later. The record of any portion of a meeting closed to the public shall be a verbatim transcript or electronic recording. In lieu of a transcript or recording, a comprehensive set of minutes may be produced if the closure decision was made pursuant to § 1517.4(a)(8) or (10).

(b) If minutes are produced, such minutes shall fully and clearly describe all matters discussed, provide a full and accurate summary of any actions taken and the reasons expressed therefor, and include a description of each of the views expressed on any item. The minutes shall also reflect the vote of each member of the Council on any roll call vote taken during the proceedings and identify all documents produced at the meeting.

(c) The following documents shall be retained by the Council as part of the transcript, recording, or minutes of the meeting:

(1) Certification by the General Counsel that the meeting may properly be closed; and

(2) Statement from the presiding officer of the meeting setting forth the date, time, and place of the meeting and listing the persons present.

(d) The Council shall make promptly available to the public at its offices at 722 Jackson Place, NW., Washington, DC the transcript, electronic recording, or minutes maintained as a record of a closed meeting, except for such information as may be withheld under one of the provisions of § 1517.5. Copies of such transcript, minutes, or transcription of an electronic recording, disclosing the identity of each speaker, shall be furnished to any person at the actual cost of duplication or transcription.

(e) [Reserved]

(f) Requests to review or obtain copies of records other than transcripts, electronic recordings or minutes of a meeting will be processed under the Freedom of Information Act (5 U.S.C. 552) or, where applicable, the Privacy Act of 1974. (5 U.S.C. 552a). Nothing in these regulations authorizes the Council to withhold from any individual any record, including the transcripts or electronic recordings described in § 1517.8, to which the individual may have access under the Privacy Act of 1974 (5 U.S.C. 552a).

PART 1518—OFFICE OF ENVIRONMENTAL QUALITY MANAGEMENT FUND

Sec.

1518.1 Purpose.
1518.2 Definitions.
1518.3 Policy.
1518.4 Procedures.

AUTHORITY: 42 U.S.C. 4375(c).

SOURCE: 67 FR 62189, Oct. 4, 2002, unless otherwise noted.

§ 1518.1 Purpose.

The purpose of the OEQ Management Fund is to finance:

(a) Study contracts that are jointly sponsored by OEQ and one or more other Federal agency; and

(b) Federal interagency environmental projects (including task forces) in which OEQ participates. *See* 42 U.S.C. 4375(a).

§ 1518.2 Definitions.

(a) *Advance Payment:* Amount of money prepaid pursuant to statutory authorization in contemplation of the later receipt of goods, services, or other assets.

(b) *Director:* The Director of the Office of Environmental Quality. The Environmental Quality Improvement Act specifies that the Chairman of the Council on Environmental quality shall serve as the Director of OEQ. 42 U.S.C. 4372(a).

(c) *OEQ Management Fund (''Fund''):* The Management Fund for the Office of Environmental Quality.

(d) *Interagency Agreement:* A document jointly executed by OEQ and another agency or agencies, which sets forth the details of a joint study or project and the funding arrangements for such a study or project.

(e) *Project Officer:* The Council on Environmental Quality staff member charged with day-to-day supervision of an OEQ Management Fund study or project.

(f) *Source:* The agency or account from which funds are contributed into the Fund.

§ 1518.3 Policy

(a) All studies and projects financed through the OEQ Management Fund shall be consistent with the purposes and goals of the National Environmental Policy Act and/or the Environmental Quality Improvement Act.

(b) Agency funds accepted by the Director for transfer into the OEQ Management Fund shall specify the purposes permissible under the source appropriation and any restrictions relating thereto.

(c) The Director may authorize expenditures to support OEQ Management Fund studies and projects, including:

(1) Leasing office space and providing utilities;

(2) Leasing or purchasing equipment;

(3) Funding travel;

(4) Contracting for goods and services; and

(5) Funding consultants and personnel costs for task force employees.

(d) In carrying out the purposes of the OEQ Management Fund, the Director is authorized to contract with public or private agencies, institutions, organizations and individuals, by negotiation, without regard to 31 U.S.C. 3324(a) and (b) 41 U.S.C. 5, and 42 U.S.C. 4372(e). All such contracting activities shall be accomplished through the Office of Administration, Executive Office of the President. The Director may, by interagency agreement with another federal agency or agencies and with the concurrence of the Office of Administration's Financial Management Division, obtain specific administrative services (including contracting activities) in support of OEQ Management Fund studies or projects.

(e) Task forces and projects funded by the OEQ Management Fund are permitted to make expenditures for all project and study activities, except for compensation or benefits for full-time OEQ employees or to reimburse OEQ or CEQ for ordinarily appropriated expenses, such as salaries, benefits, rent, telephone and supplies.

§ 1518.4 Procedures.

(a) *Charters:* (1) A charter must be prepared for each project or study to be financed and supported by the OEQ Management Fund.

(2) The charter must clearly state the relation of the study or project to the goals and purposes of the Office of Environmental Quality and the National Environmental Policy Act; describe the study or project; identify the participating agency or agencies; provide the names, titles and phone numbers of the Project Officer and administrative contact.

(3) Charters may be amended by preparing a formal amendment, which sets forth the new language to be incorporated in the existing charter.

(4) The Director shall approve all Management Fund charters and amendments in writing.

(5) Copies of each charter and charter amendment approved by the Director shall be provided to the Contracts

Branch and the Financial Management Division of the Office of Administration, Executive Office of the President.

(b) *Finances and accounting:* (1) Annual budget estimates shall be prepared for the OEQ Management Fund.

(2) An operating budget for each project or study shall be submitted to the Financial Management Division of the Office of Administration, Executive Office of the President.

(3) All contributions from other agencies to the OEQ Management Fund for a joint study or project shall be accomplished by interagency agreements, which shall provide for full payment of funds on an advance basis. 42 U.S.C. 4375(a).

(4) All contributions by the Office of Environmental Quality or the Council on Environmental Quality to the OEQ Management Fund for a joint study or project shall be accomplished by a letter of transmittal which specifies the particular study or project to be funded. A copy of this transmittal letter shall be provided to the Financial Management Division of the Office of Administration, Executive Office of the President.

(5) The OEQ Management Fund is a no-year appropriations account, which can accept one-year or multiple-year funds, and is available until the objectives for which the authority was made available are attained. Funds transferred into the Management Fund are individually accounted for and expire under the terms of their appropriation.

(6) Any agency, including the Office of Environmental Quality and the Council on Environmental Quality, may provide technical expertise, physical resources, facilities, equipment, or other assets; perform support or administrative services; or assign detailees or agency representatives to an OEQ Management Fund project or study. These contributions may be in addition to funding.

(7) Subaccounts shall be established within OEQ Management Fund for each project or study. All expenditures for a particular project or study must be matched with the source contribution and approved by the Director or the Project Officer.

(8) The Director may transfer Management Fund resources for any study or project to other federal accounts or other OEQ subaccounts provided that the transfer:

(i) Is approved in writing by the source agency that provided the portion of the funds being transferred;

(ii) Promotes the statutory mission of OEQ; and

(iii) Is justified by the Director as being in the best interests of the government.

(9) Financial transactions shall be classified under each Management Funds subaccount in sufficient detail to satisfy management planning, control requirements and financial audit requirements.

(10) All fund expenditures must comport with the purposes of the Management Fund and follow CEQ approval procedures. Any fund expenditures pursuant to interagency agreement for the provision of administrative services shall comport with the CEQ approval procedures specified in the interagency agreement.

Index to Parts 1500 Through 1508

EDITORIAL NOTE: This listing is provided for information purposes only. It is compiled and kept up-to-date by the Council on Environmental Quality.

INDEX

Act ..... 1508.2.
Action ..... 1508.18, 1508.25.
Action-forcing ..... 1500.1, 1502.1.
Adoption ..... 1500.4(n), 1500.5(h), 1506.3.
Affected Environment ..... 1502.10(f), 1502.15.
Affecting ..... 1502.3, 1508.3.
Agency Authority ..... 1500.6.
Agency Capability ..... 1501.2(a), 1507.2.
Agency Compliance ..... 1507.1.
Agency Procedures ..... 1505.1, 1507.3.
Agency Responsibility ..... 1506.5.
Alternatives ..... 1501.2(c), 1502.2, 1502.10(e), 1502.14, 1505.1(e), 1505.2, 1507.2(d), 1508.25(b).
Appendices ..... 1502.10(k), 1502.18, 1502.24.
Applicant ..... 1501.2(d)(1), 1501.4(b), 1501.8(a), 1502.19(b), 1503.1(a)(3), 1504.3(e), 1506.1(d), 1506.5(a), 1506.5(b).
Apply NEPA Early in the Process. 1501.2.
Categorical Exclusion ..... 1500.4(p), 1500.5(k), 1501.4(a), 1507.3(b), 1508.4.
Circulating of Environmental Impact Statement. 1502.19, 1506.3.
Classified Information ..... 1507.3(c).
Clean Air Act ..... 1504.1, 1508.19(a).
Combining Documents ..... 1500.4(o), 1500.5(i), 1506.4.
Commenting ..... 1502.19, 1503.1, 1503.2, 1503.3, 1503.4, 1506.6(f).
Consultation Requirement ..... 1500.4(k), 1500.5(g), 1501.7(a)(6), 1502.25.
Context ..... 1508.27(a).
Cooperating Agency ..... 1500.5(b), 1501.1(b), 1501.5(c), 1501.5(f), 1501.6, 1503.1(a)(1), 1503.2, 1503.3, 1506.3(c), 1506.5(a), 1508.5.
Cost-Benefit ..... 1502.23.
Council on Environmental Quality. 1500.3, 1501.5(e), 1501.5(f), 1501.6(c), 1502.9(c)(4), 1504.1, 1504.2, 1504.3, 1506.6(f), 1506.9, 1506.10(e), 1506.11, 1507.3, 1508.6, 1508.24.
Cover Sheet ..... 1502.10(a), 1502.11.
Cumulative Impact ..... 1508.7, 1508.25(a), 1508.25(c).
Decisionmaking ..... 1505.1, 1506.1.
Decision points ..... 1505.1(b).
Dependent ..... 1508.25(a).
Draft Environmental Impact Statement. 1502.9(a).
Early Application of NEPA ..... 1501.2.
Economic Effects ..... 1508.8.
Effective Date ..... 1506.12.
Effects ..... 1502.16, 1508.8.
Emergencies ..... 1506.11.
Endangered Species Act ..... 1502.25, 1508.27(b)(9).
Energy ..... 1502.16(e).

INDEX—Continued

Environmental Assessment ... 1501.3, 1501.4(b), 1501.4(c), 1501.7(b)(3), 1506.2(b)(4), 1506.5(b), 1508.4, 1508.9, 1508.10, 1508.13.
Environmental Consequences 1502.10(g), 1502.16.
Environmental Consultation Requirements. 1500.4(k), 1500.5(g), 1501.7(a)(6), 1502.25, 1503.3(c).
Environmental Documents ..... 1508.10.
Environmental Impact Statement. 1500.4, 1501.4(c), 1501.7, 1501.3, 1502.1, 1502.2, 1502.3, 1502.4, 1502.5, 1502.6, 1502.7, 1502.8, 1502.9, 1502.10, 1502.11, 1502.12, 1502.13, 1502.14, 1502.15, 1502.16, 1502.17, 1502.18, 1502.19, 1502.20, 1502.21, 1502.22, 1502.23, 1502.24, 1502.25, 1506.2(b)(4), 1506.3, 1506.8, 1508.11.
Environmental Protection Agency. 1502.11(f), 1504.1, 1504.3, 1506.7(c), 1506.9, 1506.10, 1508.19(a).
Environmental Review Requirements. 1500.4(k), 1500.5(g), 1501.7(a)(6), 1502.25 1503.3(c).
Expediter ..... 1501.8(b)(2).
Federal Agency ..... 1508.12.
Filing ..... 1506.9.
Final Environmental Impact Statement. 1502.9(b), 1503.1, 1503.4(b).
Finding of No Significant Impact. 1500.3, 1500.4(q), 1500.5(1), 1501.4(e), 1508.13.
Fish and Wildlife Coordination Act. 1502.25.
Format for Environmental Impact Statement. 1502.10.
Freedom of Information Act ... 1506.6(f).
Further Guidance ..... 1506.7.
Generic ..... 1502.4(c)(2).
General Services Administration. 1506.8(b)(5).
Geographic ..... 1502.4(c)(1).
Graphics ..... 1502.8.
Handbook ..... 1506.7(a).
Housing and Community Development Act. 1506.12, 1508.12.
Human Environment ..... 1502.3, 1502.22, 1508.14.
Impacts ..... 1508.8, 1508.25(c).
Implementing the Decision .... 1505.3.
Incomplete or Unavailable Information. 1502.22.
Incorporation by Reference ... 1500.4(j), 1502.21.
Index ..... 1502.10(j).
Indian Tribes ..... 1501.2(d)(2), 1501.7(a)(1), 1502.15(c), 1503.1(a)(2)(ii), 1506.6(b)(3)(ii), 1508.5, 1508.12.
Intensity ..... 1508.27(b).
Interdisciplinary Preparation .. 1502.6, 1502.17.
Interim Actions ..... 1506.1.
Joint Lead Agency ..... 1501.5(b), 1506.2.
Judicial Review ..... 1500.3.
Jurisdication by Law ..... 1508.15.

INDEX—Continued

Lead Agency	1500.5(c), 1501.1(c), 1501.5, 1501.6, 1501.7, 1501.8, 1504.3, 1506.2(b)(4), 1506.8(a), 1506.10(e), 1508.16.
Legislation	1500.5(j), 1502.3, 1506.8, 1508.17, 1508.18(a).
Limitation on Action During NEPA Process.	1506.1.
List of Preparers	1502.10(h), 1502.17.
Local or State	1500.4(n), 1500.5(h), 1501.2(d)(2), 1501.5(b), 1501.5(d), 1501.7(a)(1), 1501.8(c), 1502.16(c), 1503.1(a)(2), 1506.2(b), 1506.6(b)(3), 1508.5, 1508.12, 1508.18.
Major Federal Action	1502.3, 1508.18.
Mandate	1500.3.
Matter	1504.1, 1504.2, 1504.3, 1508.19.
Methodology	1502.24.
Mitigation	1502.14(h), 1502.16(h), 1503.3(d), 1505.2(c), 1505.3, 1508.20.
Monitoring	1505.2(c), 1505.3.
National Historic Preservation Act.	1502.25.
National Register of Historical Places.	1508.27(b)(8).
Natural or Depletable Resource Requirements.	1502.16(f).
Need for Action	1502.10(d), 1502.13.
NEPA Process	1508.21.
Non-Federal Sponsor	1501.2(d).
Notice of Intent	1501.7, 1507.3(e), 1508.22.
OMB Circular A–95	1503.1(a)(2)(iii), 1505.2, 1506.6(b)(3)(i).
102 Monitor	1506.6(b)(2), 1506.7(c).
Ongoing Activities	1506.12.
Page Limits	1500.4(a), 1501.7(b), 1502.7.
Planning	1500.5(a), 1501.2(b), 1502.4(a), 1508.18.
Policy	1500.2, 1502.4(b), 1508.18(a).
Program Environmental Impact Statement.	1500.4(i), 1502.4, 1502.20, 1508.18.
Programs	1502.4, 1508.18(b).
Projects	1508.18.
Proposal	1502.4, 1502.5, 1506.8, 1508.23.
Proposed Action	1502.10(e), 1502.14, 1506.2(c).
Public Health and Welfare	1504.1.

INDEX—Continued

Public Involvement	1501.4(e), 1503.1(a)(3), 1506.6.
Purpose	1500.1, 1501.1, 1502.1, 1504.1.
Purpose of Action	1502.10(d), 1502.13.
Record of Decision	1505.2, 1506.1.
Referrals	1504.1, 1504.2, 1504.3, 1506.3(d).
Referring Agency	1504.1, 1504.2, 1504.3.
Response to Comments	1503.4.
Rural Electrification Administration.	1506.1(d).
Scientific Accuracy	1502.24.
Scope	1502.4(a), 1502.9(a), 1508.25.
Scoping	1500.4(b), 1501.1(d), 1501.4(d), 1501.7, 1502.9(a), 1506.8(a).
Significantly	1502.3, 1508.27.
Similar	1508.25.
Small Business Associations	1506.6(b)(3)(vi).
Social Effects	1508.8.
Special Expertise	1508.26.
Specificity of Comments	1500.4(1), 1503.3.
State and Areawide Clearinghouses.	1501.4(e)(2), 1503.1(a)(2)(iii), 1506.6(b)(3)(i).
State and Local	1500.4(n), 1500.5(h), 1501.2(d)(2), 1501.5(b), 1501.5(d), 1501.7(a)(1), 1501.8(c), 1502.16(c), 1503.1(a)(2), 1506.2(b), 1506.6(b)(3), 1508.5, 1508.12, 1508.18.
State and Local Fiscal Assistance Act.	1508.18(a).
Summary	1500.4(h), 1502.10(b), 1502.12.
Supplements to Environmental Impact Statements.	1502.9(c).
Table of Contents	1502.10(c).
Technological Development	1502.4(c)(3).
Terminology	1508.1.
Tiering	1500.4(i), 1502.4(d), 1502.20, 1508.28.
Time Limits	1500.5(e), 1501.1(e), 1501.7(b)(2), 1501.8.
Timing	1502.4, 1502.5, 1506.10.
Treaties	1508.17.
When to Prepare an Environmental Impact Statement.	1501.3.
Wild and Scenic Rivers Act	1506.8(b)(ii).
Wilderness Act	1506.8(b)(ii).
Writing	1502.

CHAPTER VI—CHEMICAL SAFETY AND HAZARD INVESTIGATION BOARD

Part		*Page*
1600	[Reserved]	
1601	Procedures for disclosure of records under the Freedom of Information Act	681
1602	Protection of privacy and access to individual records under the Privacy Act of 1974	693
1603	Rules implementing the Government in the Sunshine Act	697
1610	Administrative investigations	701
1611	Testimony by employees in legal proceedings	704
1612	Production of records in legal proceedings	707
1613–1699	[Reserved]	

PART 1600 [RESERVED]

PART 1601—PROCEDURES FOR DISCLOSURE OF RECORDS UNDER THE FREEDOM OF INFORMATION ACT

Subpart A—Purpose, Scope, and Applicability

Sec.
1601.1 Purpose and scope.
1601.2 Applicability.
1601.3 Definitions.

Subpart B—Administration

1601.10 Protection of records.
1601.11 Preservation of records pertaining to requests under this part.
1601.12 Public reading room.

Subpart C—Procedures for Requesting and Disclosing Records

1601.20 Requests for records.
1601.21 Responses to requests.
1601.22 Form and content of responses.
1601.23 Appeals of denials.
1601.24 Timing of responses to requests.
1601.25 Disclosure of requested records.
1601.26 Special procedures for confidential business information.

Subpart D—Fees

1601.30 Fees to be charged—general.
1601.31 Fees to be charged—categories of requesters.
1601.32 Limitations on charging fees.
1601.33 Miscellaneous fee provisions.

AUTHORITY: 5 U.S.C. 552, 553; 42 U.S.C. 7412 *et seq.*

SOURCE: 65 FR 70499, Nov. 24, 2000, unless otherwise noted.

Subpart A—Purpose, Scope, and Applicability

§ 1601.1 Purpose and scope.

This part contains the regulations of the United States Chemical Safety and Hazard Investigation Board (''CSB'' or ''Board'' or ''agency'') implementing the Freedom of Information Act (''FOIA''). These regulations provide procedures by which members of the public may obtain access to records compiled, created, and maintained by the CSB, along with procedures it must follow in response to such requests for records.

§ 1601.2 Applicability.

(a) *General.* The FOIA and the regulations in this part apply to all CSB documents and information. However, if another law sets specific procedures for disclosure, the CSB will process a request in accordance with the procedures that apply to those specific documents. If a request is received for disclosure of a document to the public which is not required to be released under those provisions, the CSB will consider the request under the FOIA and the regulations in this part.

(b) *Records available through routine distribution procedures.* When the record requested includes material published and offered for sale, *e.g.,* by the Superintendent of Documents of the Government Printing Office, or by an authorized private distributor, the CSB will first refer the requester to those sources. Nevertheless, if the requester is not satisfied with the alternative sources, the CSB will process the request under the FOIA.

§ 1601.3 Definitions.

Appeals Officer means the person designated by the Chairperson to process appeals of denials of requests for CSB records under the FOIA.

Business submitter means any person or entity which provides confidential business information, directly or indirectly, to the CSB and who has a proprietary interest in the information.

Chairperson means the Chairperson of the CSB (including, in the absence of a Chairperson, the Board Member supervising personnel matters) or his or her designee.

Commercial-use requester means requesters seeking information for a use or purpose that furthers the commercial, trade, or profit interests of the requester or the person on whose behalf the request is made. In determining whether a requester properly belongs in this category, the CSB shall determine, whenever reasonably possible, the use to which a requester will put the documents requested. Where the CSB has reasonable cause to doubt the use to which a requester will put the records sought, or where that use is not clear from the request itself, the CSB

shall seek additional clarification before assigning the request to a specific category.

Confidential business information means records provided to the government by a submitter that arguably contain material exempt from disclosure under Exemption 4 of the FOIA, because disclosure could reasonably be expected to cause substantial competitive harm.

Direct costs means those expenditures by the CSB actually incurred in searching for and duplicating records to respond to a FOIA request. Direct costs include the salary of the employee or employees performing the work (the basic rate of pay for the employee plus a percentage of that rate to cover benefits) and the cost of operating duplicating machinery. Direct costs do not include overhead expenses, such as the cost of space and heating or lighting of the facility in which the records are stored.

Duplication refers to the process of making a copy of a document necessary to fulfill a FOIA request. Such copies can take the form of, among other things, paper copy, microform, audio-visual materials, or machine-readable documentation. The copies provided shall be in a form that is reasonably usable by requesters.

Educational institution refers to a preschool, a public or private elementary or high school, an institution of undergraduate higher education, an institution of graduate higher education, an institution of professional education, and an institution of vocational education, which operates a program of scholarly research.

FOIA Officer means the person designated to process requests for CSB documents under the FOIA.

Non-commercial scientific institution refers to an institution that is not operated on a commercial basis as that term is used above in defining *commercial-use requester*, and which is operated solely for the purpose of conducting scientific research the results of which are not intended to promote any particular product or industry.

Record includes any writing, drawing, map, recording, tape, film, photo, or other documentary material by which information is preserved.

Representative of the news media refers to any person actively gathering news for an entity that is organized and operated to publish or broadcast news to the public. The term *news* means information that is about current events or that would be of current interest to the public. For freelance journalists to be regarded as working for a news organization, they must demonstrate a solid basis for expecting publication through that organization. A publication contract would be the clearest proof, but components shall also look to the past publication record of a requester in making this determination.

Requester means any person, including an individual, Indian tribe, partnership, corporation, association, or public or private organization other than a Federal agency, that requests access to records in the possession of the CSB.

Review refers to the process of examining a record, in response to a FOIA request, to determine whether any portion of that record may be withheld under one or more of the FOIA exemptions. It also includes the processing of any record for disclosure; for example, redacting information that is exempt from disclosure under the FOIA. Review does not include time spent resolving general legal or policy issues regarding the use of FOIA exemptions.

Search refers to the time spent looking for material that is responsive to a request, including page-by-page or line-by-line identification of material within a document. The CSB shall ensure that searches are conducted in the most efficient and least expensive manner reasonably possible.

Submitter means any person or entity who provides information directly or indirectly to the CSB. The term includes, but is not limited to, corporations, Indian tribal governments, state governments, and foreign governments.

Working day means a Federal workday that does not include Saturdays, Sundays, or Federal holidays.

Subpart B—Administration

§ 1601.10 Protection of records.

(a) Except as authorized by this part or as otherwise necessary in performing official duties, no employee shall in any manner disclose or permit

disclosure of any document or information in the possession of the CSB that is confidential or otherwise of a nonpublic nature, including that regarding the CSB, the Environmental Protection Agency or the Occupational Safety and Health Administration.

(b) No person may, without permission, remove from the place where it is made available any record made available to him for inspection or copying. Stealing, altering, mutilating, obliterating, or destroying, in whole or in part, such a record shall be deemed a crime.

§ 1601.11 Preservation of records pertaining to requests under this part.

The CSB will preserve all correspondence pertaining to the requests that it receives under this part, as well as copies of all requested records, until disposition or destruction is authorized by Title 44 of the United States Code or the National Archives and Records Administration's General Records Schedule 14. Records will not be disposed of while they are the subject of a pending request, appeal, or lawsuit under the FOIA.

§ 1601.12 Public reading room.

(a) The CSB maintains a public reading room that contains the records that the FOIA requires to be made regularly available for public inspection and copying as well as a current subject-matter index of its reading room records.

(b) Because of the lack of requests to date for material required to be indexed, the CSB has determined that it is unnecessary and impracticable to publish quarterly, or more frequently, and distribute (by sale or otherwise) copies of each index and supplements thereto, as provided in 5 U.S.C. 552(a)(2). However, the CSB will provide a copy of such indexes to a member of the public upon request, at a cost not to exceed the direct cost of duplication and mailing, if sending records by other than ordinary mail.

(c) The CSB maintains a public reading room at its headquarters: 2175 K Street, NW, Suite 400, Washington, DC 20037–1809.

(d) *Copying.* The cost of copying information available in the offices of the CSB shall be imposed on a requester in accordance with the provisions of §§ 1601.30 through 1601.33.

(e) The CSB also makes reading room records available electronically through the agency's World Wide Web site (which can be found at http://www.csb.gov). This includes the index of its reading room records, indicating which records are available electronically.

Subpart C—Procedures for Requesting and Disclosing Records

§ 1601.20 Requests for records.

(a) *Addressing requests.* Requests for records in the possession of the CSB shall be made in writing. The envelope and the request both should be clearly marked *FOIA Request* and addressed to: FOIA Officer, United States Chemical Safety and Hazard Investigation Board, 2175 K Street, NW, Suite 400, Washington, DC 20037–1809. A request improperly addressed will be deemed not to have been received for the purposes of § 1601.24(a) until it is received, or would have been received with the exercise of due diligence, by the FOIA Officer. Records requested in conformance with this section and which are not withholdable records may be obtained in person or by mail as specified in the request. Records to be obtained in person will be available for inspection or copying during business hours on a regular business day in the office of the CSB.

(b) *Description of records.* Each request must reasonably describe the desired records in sufficient detail to enable CSB personnel to locate the records with a reasonable amount of effort. A request for a specific category of records will be regarded as fulfilling this requirement if it enables responsive records to be identified by a technique or process that is not unreasonably burdensome or disruptive of CSB operations.

(1) Whenever possible, a request should include specific information about each record sought, such as the date, title or name, author, recipient, and subject matter of the record.

(2) If the FOIA Officer determines that a request does not reasonably describe the records sought, he or she will either advise the requester what additional information is needed to locate the record or otherwise state why the request is insufficient. The FOIA Officer will also extend to the requester an opportunity to confer with CSB personnel with the objective of reformulating the request in a manner which will meet the requirements of this section.

(c) *Agreement to pay fees.* A FOIA request shall be considered an agreement by the requester to pay all applicable fees charged under §§1601.30 through 1601.33 up to $25, unless the requester seeks a waiver of fees. The CSB ordinarily will confirm this agreement in an acknowledgement letter. When making a request, you may specify a willingness to pay a greater or lesser amount.

(d) *Types of records not available.* The FOIA does not require the CSB to:

(1) Compile or create records solely for the purpose of satisfying a request for records;

(2) Provide records not yet in existence, even if such records may be expected to come into existence at some future time; or

(3) Restore records destroyed or otherwise disposed of, except that the FOIA Officer must notify the requester that the requested records have been destroyed or otherwise disposed of.

§ 1601.21 Responses to requests.

(a) *Response to initial request.* The FOIA Officer is authorized to grant or deny any request for a record and to determine appropriate fees.

(b) *Referral to another agency.* When a requester seeks records that originated in another Federal government agency, the CSB will refer the request to the other agency for response. If the CSB refers the request to another agency, it will notify the requester of the referral. A request for any records classified by some other agency will be referred to that agency for response.

(c) *Creating records.* If a person seeks information from the CSB in a format that does not currently exist, the CSB will make reasonable efforts to provide the information in the format requested. The CSB will not create a new record of information to satisfy a request.

(d) *No responsive record.* If no records are responsive to the request, the FOIA Officer will so notify the requester in writing.

§ 1601.22 Form and content of responses.

(a) *Form of notice granting a request.* After the FOIA Officer has granted a request in whole or in part, the requester will be notified in writing. The notice shall describe the manner in which the record will be disclosed, whether by providing a copy of the record with the response or at a later date, or by making a copy of the record available to the requester for inspection at a reasonable time and place. The procedure for such an inspection may not unreasonably disrupt the operation of the CSB. The response letter will also inform the requester of any fees to be charged in accordance with the provisions of §§1601.30 through 1601.33.

(b) *Form of notice denying a request.* When the FOIA Officer denies a request in whole or in part, he or she will so notify the requester in writing. The response will be signed by the FOIA Officer and will include:

(1) The name and title or position of the person making the denial;

(2) A brief statement of the reason or reasons for the denial, including the FOIA exemption or exemptions which the FOIA Officer has relied upon in denying the request; and

(3) A statement that the denial may be appealed under §1601.23 and a description of the requirements of that section.

§ 1601.23 Appeals of denials.

(a) *Right of appeal.* If a request has been denied in whole or in part, the requester may appeal the denial to: FOIA Appeals Officer, United States Chemical Safety and Hazard Investigation Board, 2175 K Street, NW, Suite 400, Washington, DC 20037–1809.

(b) *Letter of appeal.* The appeal must be in writing and must be sent within 30 days of receipt of the denial letter. An appeal should include a copy of the

initial request, a copy of the letter denying the request in whole or in part, and a statement of the circumstances, reasons, or arguments advanced in support of disclosure of the requested record. Both the envelope and the letter of appeal must be clearly marked *FOIA Appeal.* An appeal improperly addressed shall be deemed not to have been received for purposes of the 20-day time period set forth in § 1601.24(e) until it is received, or would have been received with the exercise of due diligence, by the Appeals Officer.

(c) *Action on appeal.* The disposition of an appeal will be in writing and will constitute the final action of the CSB on a request. A decision affirming in whole or in part the denial of a request will include a brief statement of the reason or reasons for affirmance, including each FOIA exemption relied on. If the denial of a request is reversed in whole or in part on appeal, the request will be processed promptly in accordance with the decision on appeal.

(d) *Judicial review.* If the denial of the request for records is upheld in whole or in part, or if a determination on the appeal has not been mailed at the end of the 20-day period or the last extension thereof, the requester is deemed to have exhausted his or her administrative remedies, giving rise to a right of judicial review under 5 U.S.C. 552(a)(4).

§ 1601.24 Timing of responses to requests.

(a) *In general.* The CSB ordinarily shall respond to requests according to their order of receipt.

(b) *Multitrack processing.* (1) The CSB may use two processing tracks by distinguishing between simple and more complex requests based on the amount of work and/or time needed to process the request, including according to limits based on the number of pages involved. If the agency does so, it shall advise requesters assigned to its slower track of the eligibility limits for its faster track.

(2) The agency may provide requesters in its slower track with an opportunity to limit the scope of their requests in order to qualify for faster processing within the specified limits of the agency's faster track. If it does so, the agency will contact the requester either by telephone or by letter, whichever is most efficient in each case.

(c) *Unusual circumstances.* (1) Where the time limits for processing a request cannot be met because of unusual circumstances and the CSB determines to extend the time limits on that basis, the agency shall as soon as practicable notify the requester in writing of the unusual circumstances and of the date by which processing of the request can be expected to be completed. Where the extension is for more than ten working days, the CSB shall provide the requester with an opportunity either to modify the request so that it may be processed within the time limits or to arrange an alternative time period for processing the request or a modified request.

(2) Where the CSB reasonably believes that multiple requests submitted by a requester, or by a group of requesters acting in concert, constitute a single request that would otherwise involve unusual circumstances, and the requests involve clearly related matters, they may be aggregated. Multiple requests involving unrelated matters will not be aggregated.

(d) *Expedited processing.* (1) Requests and appeals will be taken out of order and given expedited treatment whenever it is determined that they involve:

(i) Circumstances in which the lack of expedited treatment could reasonably be expected to pose an imminent threat to the life or physical safety of an individual;

(ii) An urgency to inform the public about an actual or alleged Federal government activity, if made by a person primarily engaged in disseminating information;

(iii) The loss of substantial due process rights; or

(iv) A matter of widespread and exceptional media interest in which there exists possible questions about the government's integrity which affect public confidence.

(2) A request for expedited processing may be made at the time of the initial request for records or at any later time.

(3) A requester who seeks expedited processing must submit a statement, certified to be true and correct to the

best of that person's knowledge and belief, explaining in detail the basis for requesting expedited processing. For example, a requester within the category in paragraph (d)(1)(ii) of this section, if not a full-time member of the news media, must establish that he or she is a person whose main professional activity or occupation is information dissemination, though it need not be his or her sole occupation. A requester within the category in paragraph (d)(1)(ii) of this section also must establish a particular urgency to inform the public about the government activity involved in the request, beyond the public's right to know about government activity generally. The formality of certification may be waived as a matter of administrative discretion.

(4) Within ten calendar days of its receipt of a request for expedited processing, the CSB shall decide whether to grant it and shall notify the requester of the decision. If a request for expedited treatment is granted, the request shall be given priority and shall be processed as soon as practicable. If a request for expedited processing is denied, any appeal of that decision shall be acted on expeditiously.

(e) *Appeals.* A written determination on an appeal submitted in accordance with § 1601.23 will be issued within 20 working days after receipt of the appeal. This time limit may be extended in unusual circumstances up to a total of 10 working days after written notice to the requester setting forth the reasons for the extension and the date on which a determination is expected to be made. As used in this paragraph, unusual circumstances means that there is a need to:

(1) Search for and collect the requested records from facilities that are separate from the office processing the request;

(2) Search for, collect, and appropriately examine a voluminous amount of separate and distinct records which are demanded in a single request; or

(3) Consult with another agency having a substantial interest in the determination of the request, or consult with various offices within the CSB that have a substantial interest in the records requested.

(f) When a determination cannot be mailed within the applicable time limit, the appeal will nevertheless be processed. In such case, upon the expiration of the time limit, the requester will be informed of the reason for the delay, of the date on which a determination may be expected to be mailed, and of that person's right to seek judicial review. The requester may be asked to forego judicial review until determination of the appeal.

§ 1601.25 Disclosure of requested records.

(a) The FOIA Officer shall make requested records available to the public to the greatest extent possible in keeping with the FOIA, except that the following records are exempt from the disclosure requirements:

(1) Records specifically authorized under criteria established by an Executive Order to be kept secret in the interest of national defense or foreign policy and which are, in fact, properly classified pursuant to such Executive Order;

(2) Records related solely to the internal personnel rules and practices of the CSB;

(3) Records specifically exempted from disclosure by statute (other than 5 U.S.C. 552(b)) provided that such statute requires that the matters be withheld from the public in such a manner as to leave no discretion on the issue or that the statute establishes particular criteria for withholding information or refers to particular types of matters to be withheld;

(4) Records containing trade secrets and commercial or financial information obtained from a person and privileged or confidential;

(5) Interagency or intra-agency memoranda or letters which would not be available by law to a party other than an agency in litigation with the CSB;

(6) Personnel and medical files and similar files the disclosure of which would constitute a clearly unwarranted invasion of personal privacy;

(7) Records or information compiled for law enforcement purposes, but only to the extent that the production of such law enforcement records or information:

(i) Could reasonably be expected to interfere with enforcement proceedings;

(ii) Would deprive a person of a right to a fair trial or an impartial adjudication;

(iii) Could reasonably be expected to constitute an unwarranted invasion of personal privacy;

(iv) Could reasonably be expected to disclose the identity of a confidential source, including a State, local or foreign agency or authority or any private institution which furnished information on a confidential basis, and in the case of a record or information compiled by criminal law enforcement authority in the course of a criminal investigation or by an agency conducting a lawful national security intelligence investigation, information furnished by a confidential source;

(v) Would disclose techniques and procedures for law enforcement investigations or prosecutions, or would disclose guidelines for law enforcement investigations or prosecutions if such disclosure could reasonably be expected to risk circumvention of the law; or

(vi) Could reasonably be expected to endanger the life or physical safety of any individual.

(8) Records contained in or related to examination, operating, or condition reports prepared by, or on behalf of, or for the use of an agency responsible for the regulation or supervision of financial institutions;

(9) Geological or geophysical information and data, including maps, concerning wells.

(b) If a requested record contains exempted material along with nonexempted material, all reasonably segregable nonexempt material shall be disclosed.

(c) Even if an exemption described in paragraph (a) of this section may be reasonably applicable to a requested record, or portion thereof, the CSB may elect under the circumstances of any particular request not to apply the exemption to such requested record, or portion thereof, subject to the provisions in §1601.26 for confidential business information. The fact that the exemption is not applied by the CSB to any requested record, or portion thereof, has no precedential significance as to the application or non-application of the exemption to any other requested record, or portion thereof, no matter when the request is received.

§1601.26 Special procedures for confidential business information.

(a) *In general.* Confidential business information provided to the CSB by a business submitter shall not be disclosed pursuant to a FOIA request except in accordance with this section.

(b) *Designation of business information.* Business submitters should use good-faith efforts to designate, by appropriate markings, either at the time of submission or at a reasonable time thereafter, those portions of their submissions which they deem to be protected under Exemption 4 of the FOIA, 5 U.S.C. 552(b)(4). Any such designation will expire 10 years after the records were submitted to the government, unless the submitter requests, and provides reasonable justification for, a designation period of longer duration.

(c) *Predisclosure notification.* (1) Except as is provided for in paragraph (h) of this section, the FOIA Officer shall, to the extent permitted by law, provide a submitter with prompt written notice of a FOIA request or administrative appeal encompassing its confidential business information whenever required under paragraph (d) of this section. Such notice shall either describe the exact nature of the business information requested or provide copies of the records or portions thereof containing the business information.

(2) Whenever the FOIA Officer provides a business submitter with the notice set forth in this paragraph, the FOIA Officer shall notify the requester that the request includes information that may arguably be exempt from disclosure under Exemption 4 of the FOIA and that the person or entity who submitted the information to the CSB has been given the opportunity to comment on the proposed disclosure of information.

(d) *When notice is required.* The CSB shall provide a business submitter with notice of a request whenever:

(1) The business submitter has in good faith designated the information

as business information deemed protected from disclosure under 5 U.S.C. 552(b)(4); or

(2) The CSB has reason to believe that the request seeks business information the disclosure of which may result in substantial commercial or financial injury to the business submitter.

(e) *Opportunity to object to disclosure.* Through the notice described in paragraph (c) of this section, the CSB shall, to the extent permitted by law, afford a business submitter at least 10 working days within which it can provide the CSB with a detailed written statement of any objection to disclosure. Such statement shall demonstrate why the information is contended to be a trade secret or commercial or financial information that is privileged or confidential and why disclosure would cause competitive harm. Whenever possible, the business submitter's claim of confidentiality should be supported by a statement or certification by an officer or authorized representative of the business submitter. Information provided by a submitter pursuant to this paragraph may itself be subject to disclosure under the FOIA.

(f) *Notice of intent to disclose.* (1) The FOIA Officer shall consider carefully a business submitter's objections and specific grounds for nondisclosure prior to determining whether to disclose confidential commercial business information. Whenever the FOIA Officer decides to disclose such information over the objection of a business submitter, the FOIA Officer shall forward to the business submitter a written notice at least 10 working days before the date of disclosure containing:

(i) A statement of the reasons for which the business submitter's disclosure objections were not sustained,

(ii) A description of the confidential commercial information to be disclosed, and

(iii) A specified disclosure date.

(2) Such notice of intent to disclose likewise shall be forwarded to the requester at least 10 working days prior to the specified disclosure date.

(g) *Notice of FOIA lawsuit.* Whenever a requester brings suit seeking to compel disclosure of confidential business information, the FOIA Officer shall promptly notify the business submitter of such action.

(h) *Exceptions to predisclosure notification.* The requirements of this section shall not apply if:

(1) The FOIA Officer determines that the information should not be disclosed;

(2) The information lawfully has been published or has been officially made available to the public;

(3) Disclosure of the information is required by law (other than 5 U.S.C. 552); or

(4) The designation made by the submitter in accordance with paragraph (b) of this section appears obviously frivolous; except that, in such a case, the FOIA Officer will provide the submitter with written notice of any final decision to disclose confidential business information within a reasonable number of days prior to a specified disclosure date.

Subpart D—Fees

§ 1601.30 Fees to be charged—general.

(a) *Policy.* Generally, the fees charged for requests for records pursuant to 5 U.S.C. 552 shall cover the full allowable direct costs of searching for, reproducing, and reviewing records that are responsive to a request for information. Fees shall be assessed according to the schedule contained in paragraph (b) of this section and the category of requesters described in § 1601.31 for services rendered by the CSB staff in responding to, and processing requests for, records under this part. Fees assessed will be paid by check or money order payable to the United States Treasury.

(b) *Types of charges.* The types of charges that may be assessed in connection with the production of records in response to a FOIA request are as follows:

(1) *Searches.*

(i) *Manual searches for records.* For each quarter hour spent in searching for and/or reviewing a requested record, the fees will be: $4.00 for clerical personnel; $8.00 for professional personnel; and $11.00 for managerial personnel.

(ii) *Computer searches for records.* Requesters will be charged at the actual direct costs of conducting a search

using existing programming. These direct costs will include the cost of operating the central processing unit for that portion of operating time that is directly attributable to searching for records and the operator/programmer salary, *i.e.*, basic pay plus 16 percent, apportionable to the search. A charge shall also be made for any substantial amounts of special supplies or materials used to contain, present, or make available the output of computers, based upon the prevailing levels of costs to the CSB for the type and amount of such supplies or materials that are used. Nothing in this paragraph shall be construed to entitle any person or entity, as of right, to any services in connection with computerized records, other than services to which such person or entity may be entitled under the provisions of this section or § 1601.32. The CSB will not alter or develop programming to conduct a search.

(iii) *Unproductive searches.* The CSB will charge search fees even if no records are found which are responsive to the request or if the records found are exempt from disclosure.

(2) *Duplication.* Records will be reproduced at a rate of $0.25 per page. For copies prepared by computer, such as tapes or printouts, the requester shall be charged the actual cost, including operator time, of production of the tape or printout. For other methods of reproduction, the actual direct costs of reproducing the record(s) shall be charged.

(3) *Review.* Only commercial-use requesters may be charged for time spent reviewing records to determine whether they are exempt from mandatory disclosure. Charges may be assessed only for initial review, *i.e.*, the review undertaken the first time the CSB analyzes the applicability of a specific exemption to a particular record or portion of a record. Records or portions of records withheld in full under an exemption that is subsequently determined not to apply may be reviewed again to determine the applicability of other exemptions not previously considered. The costs for such a subsequent review are properly assessable.

(4) *Other services and materials.* Where the CSB elects, as a matter of administrative discretion, to comply with a request for a special service or materials, such as certifying that records are true copies or sending records by special methods, the actual direct costs of providing the service or materials will be charged.

§ 1601.31 Fees to be charged—categories of requesters.

(a) *Fees for various requester categories.* Paragraphs (b) through (e) of this section state, for each category of requester, the types of fees generally charged by the CSB. However, for each of these categories, the fees may be limited, waived or reduced in accordance with the provisions set forth in § 1601.32(c). If the CSB has reasonable cause to doubt the purpose specified in the request for which a requester will use the records sought, or where the purpose is not clear from the request itself, the CSB will seek clarification before assigning the request a specific category.

(b) *Commercial use requester.* The CSB shall charge fees for records requested by persons or entities making a commercial use request in an amount that equals the full direct costs for searching for, reviewing for release, and reproducing the records sought. Commercial use requesters are not entitled to 2 hours of free search time nor 100 free pages of reproduction of records. In accordance with § 1601.30, commercial use requesters may be charged the costs of searching for and reviewing records even if there is ultimately no disclosure of records.

(c) *Educational and noncommercial scientific institutions.* The CSB shall charge fees for records requested by, or on behalf of, educational institutions and noncommercial scientific institutions in an amount which equals the cost of reproducing the records responsive to the request, excluding the cost of reproducing the first 100 pages. No search fee shall be charged with respect to requests by educational and noncommercial scientific institutions. For a request to be included in this category, requesters must show that the request being made is authorized by and under the auspices of a qualifying institution, and that the records are not sought for commercial use but are

sought in furtherance of scholarly research (if the request is from an educational institution) or scientific research (if the request is from a noncommercial scientific institution).

(d) *News media.* The CSB shall charge fees for records requested by representatives of the news media in an amount which equals the cost of reproducing the records responsive to the request, excluding the costs of reproducing the first 100 pages. No search fee shall be charged with respect to requests by representatives of the news media. For a request to be included in this category, the requester must qualify as a representative of the news media and the request must not be made for a commercial use. A request for records supporting the news dissemination function of the requester shall not be considered to be a request that is for commercial use.

(e) *All other requesters.* The CSB shall charge fees for records requested by persons or entities that are not classified in any of the categories listed in paragraphs (b), (c), or (d) of this section in an amount that equals the full reasonable direct cost of searching for and reproducing records that are responsive to the request, excluding the first 2 hours of search time and the cost of reproducing the first 100 pages of records. In accordance with § 1601.30, requesters in this category may be charged the cost of searching for records even if there is ultimately no disclosure of records, excluding the first 2 hours of search time.

(f) For purposes of the exceptions contained in this section on assessment of fees, the word *pages* refers to paper copies of 8½ × 11 inches or 11 × 14 inches. Thus, requesters are not entitled to 100 microfiche or 100 computer disks, for example. A microfiche containing the equivalent of 100 pages or a computer disk containing the equivalent of 100 pages of computer printout meets the terms of the exception.

(g) For purposes of paragraph (e) of this section, the term *search time* has as its basis, manual search. To apply this term to searches made by computer, the CSB will determine the hourly cost of operating the central processing unit and the operator's hourly salary plus 16 percent. When the cost of the search (including the operator time and the cost of operating the computer to process a request) equals the equivalent dollar amount of 2 hours of the salary plus 16 percent of the person performing the search, *i.e.,* the operator, the CSB will begin assessing charges for the computer.

§ 1601.32 Limitations on charging fees.

(a) *In general.* Except for requesters seeking records for a commercial use as described in § 1601.31(b), the CSB will provide, without charge, the first 100 pages of duplication and the first 2 hours of search time, or their cost equivalent.

(b) *No fee charged.* The CSB will not charge fees to any requester, including commercial use requesters, if the cost of collecting a fee would be equal to or greater than the fee itself. The elements to be considered in determining the cost of collecting a fee are the administrative costs of receiving and recording a requester's remittance and of processing the fee.

(c) *Waiver or reduction of fees.* The CSB may grant a waiver or reduction of fees if the CSB determines that the disclosure of the information is in the public interest because it is likely to contribute significantly to public understanding of the operations or activities of the Federal government, and the disclosure of the information is not primarily in the commercial interest of the requester. Requests for a waiver or reduction of fees will be considered on a case-by-case basis. The following factors will be considered by the CSB in determining whether a waiver or reduction of fees is in the public interest:

(i) *The subject of the request.* Whether the subject of the requested records concerns the operations or activities of the government. The subject matter of the requested records, in the context of the request, must specifically concern identifiable operations or activities of the Federal government with a connection that is direct and clear, not remote or attenuated. Furthermore, the records must be sought for their informative value with respect to those government operations or activities; a request for access to records for their intrinsic informational content alone

will not satisfy this threshold consideration.

(ii) *The informative value of the information to be disclosed.* Whether the disclosure is likely to contribute to an understanding of government operations or activities. The disclosable portions of the requested records must be meaningfully informative on specific government operations or activities in order to hold potential for contributing to increased public understanding of those operations and activities. The disclosure of information that is already in the public domain, in either a duplicative or substantially identical form, would not be likely to contribute to such understanding, as nothing new would be added to the public record.

(iii) *The contribution to an understanding of the subject by the general public.* Whether disclosure of the requested information will contribute to the public understanding. The disclosure must contribute to the understanding of the public at large, as opposed to the individual understanding of the requester or a narrow segment of interested persons. A requester's identity and qualifications, e.g., expertise in the subject area and ability and intention to convey information to the general public, will be considered.

(iv) *The significance of the contribution in public understanding.* Whether the disclosure is likely to significantly enhance the public understanding of government operations or activities. The public's understanding of the subject matter in question, as compared to the level of public understanding existing prior to the disclosure, must be likely to be enhanced by the disclosure to a significant extent. The FOIA Officer shall not make a separate value judgment as to whether information, even though it in fact would contribute significantly to public understanding of the operations or activities of the government, is ''important'' enough to be made public.

(2) In order to determine whether the second fee waiver requirement is met, i.e., that disclosure of the requested information is not primarily in the commercial interest of the requester, the CSB shall consider the following two factors in sequence:

(i) *The existence and magnitude of a commercial interest.* Whether the requester, or any person on whose behalf the requester may be acting, has a commercial interest that would be furthered by the requested disclosure. In assessing the magnitude of identified commercial interests, consideration will be given to the effect that the information disclosed would have on those commercial interests, as well as to the extent to which FOIA disclosures serve those interests overall. Requesters shall be given a reasonable opportunity in the administrative process to provide information bearing upon this consideration.

(ii) *The primary interest in disclosure.* Whether the magnitude of the identified commercial interest of the requester is sufficiently large in comparison with the public interest in disclosure, that disclosure is primarily in the commercial interest of the requester. A fee waiver or reduction is warranted only where, once the public interest standard set out in paragraph (c)(1) of this section is satisfied, that public interest can fairly be regarded as greater in magnitude than that of the requester's commercial interest in disclosure. The CSB will ordinarily presume that, where a news media requester has satisfied the public interest standard, the public interest will be serviced primarily by disclosure to that requester. Disclosure to requesters who compile and market Federal government information for direct economic gain will not be presumed to primarily serve the public interest.

(3) Where only a portion of the requested record satisfies the requirements for a waiver or reduction of fees under this paragraph, a waiver or reduction shall be granted only as to that portion.

(4) A request for a waiver or reduction of fees must accompany the request for disclosure of records and should include:

(i) A clear statement of the requester's interest in the records;

(ii) The proposed use of the records and whether the requester will derive income or other benefit from such use;

(iii) A statement of how the public will benefit from release of the requested records; and

(iv) If specialized use of the documents is contemplated, a statement of the requester's qualifications that are relevant to the specialized use.

(5) A requester may appeal the denial of a request for a waiver or reduction of fees in accordance with the provisions of § 1601.23.

§ 1601.33 Miscellaneous fee provisions.

(a) *Notice of anticipated fees in excess of $25.* Where the CSB determines or estimates that the fees chargeable will amount to more than $25, the CSB shall promptly notify the requester of the actual or estimated amount of fees or such portion thereof that can be readily estimated, unless the requester has indicated his or her willingness to pay fees as high as those anticipated. Where a requester has been notified that the actual or estimated fees may exceed $25, the request will be deemed not to have been received until the requester has agreed to pay the anticipated total fee. A notice to the requester pursuant to this paragraph will include the opportunity to confer with CSB personnel in order to reformulate the request to meet the requester's needs at a lower cost.

(b) *Aggregating requests.* A requester may not file multiple requests at the same time, each seeking portions of a record or records, solely in order to avoid the payment of fees. When the CSB reasonably believes that a requester, or a group of requesters acting in concert, is attempting to break a request into a series of requests for the purpose of evading the assessment of fees, the CSB may aggregate such requests and charge accordingly. One element to be considered in determining whether a belief would be reasonable is the time period over which the requests have occurred. The CSB will presume that multiple requests of this type made within a 30-day period have been made in order to evade fees. Where requests are separated by a longer period, the CSB shall aggregate them only where there exists a solid basis for determining that such aggregation is warranted, *e.g.,* where the requests involve clearly related matters. Multiple requests regarding unrelated matters will not be aggregated.

(c) *Advance payment of fees.* (1) The CSB does not require an advance payment before work is commenced or continued, unless:

(i) The CSB estimates or determines that the fees are likely to exceed $250. If it appears that the fees will exceed $250, the CSB will notify the requester of the likely cost and obtain satisfactory assurance of full payment where the requester has a history of prompt payment of FOIA fees. In the case of requesters with no history of payment, the CSB may require an advance payment of fees in an amount up to the full estimated charge that will be incurred; or

(ii) The requester has previously failed to pay a fee in a timely fashion, *i.e.,* within 30 days of the date of a billing. In such cases, the CSB may require the requester to pay the full amount owed plus any applicable interest, as provided in paragraph (d) of this section, or demonstrate that the fee owed has been paid, prior to processing any further record request. Under these circumstances, the CSB may require the requester to make an advance payment of the full amount of the fees anticipated before processing a new request or finishing processing of a pending request from that requester.

(2) A request for an advance deposit shall ordinarily include an offer to the requester to confer with identified CSB personnel to attempt to reformulate the request in a manner which will meet the needs of the requester at a lower cost.

(3) When the CSB requests an advance payment of fees, the administrative time limits described in 5 U.S.C. 552(a)(6) begin only after the CSB has received the advance payment.

(d) *Interest.* The CSB may assess interest charges on an unpaid bill starting on the 31st day following the day on which the bill was sent. Once a fee payment has been received by the CSB, even if not processed, the accrual of interest shall be stayed. Interest charges shall be assessed at the rate prescribed in 31 U.S.C. 3717 and shall accrue from the date of the billing.

(e) Whenever a total fee calculated under paragraph (d) of this section is $14.00 or less for any request, no fee will be charged.

PART 1602—PROTECTION OF PRIVACY AND ACCESS TO INDIVIDUAL RECORDS UNDER THE PRIVACY ACT OF 1974

Sec.
1602.1 General provisions.
1602.2 Requests for access to records.
1602.3 Responsibility for responding to requests for access to records.
1602.4 Responses to requests for access to records.
1602.5 Appeals from denials of requests for access to records.
1602.6 Requests for amendment or correction of records.
1602.7 Requests for accountings of record disclosures.
1602.8 Preservation of records.
1602.9 Fees.
1602.10 Notice of court-ordered and emergency disclosures.

AUTHORITY: 5 U.S.C. 552a, 553; 42 U.S.C. 7412 *et seq.*

SOURCE: 66 FR 17080, Mar. 29, 2001, unless otherwise noted.

§ 1602.1 General provisions.

(a) *Purpose and scope.* This part contains the rules that the Chemical Safety and Hazard Investigation Board (''CSB'' or ''Board'') follows under the Privacy Act of 1974, 5 U.S.C. 552a. These rules should be read together with the Privacy Act, which provides additional information about records maintained on individuals. The rules in this part apply to all records in systems of records maintained by the CSB that are retrieved by an individual's name or personal identifier. They describe the procedures by which individuals may request access to records about themselves, request amendment or correction of those records, and request an accounting of disclosures of those records by the CSB. In addition, the CSB processes all Privacy Act requests for access to records under the Freedom of Information Act (FOIA), 5 U.S.C. 552, following the rules contained in part 1601 of this chapter, which gives requests the benefit of both statutes.

(b) *Definitions.* As used in this part:

Requester means an individual who makes a request for access, a request for amendment or correction, or a request for an accounting under the Privacy Act.

Request for access to a record means a request made as described in subsection (d)(1) of the Privacy Act, 5 U.S.C. 552a.

Request for amendment or correction of a record means a request made as described in subsection (d)(2) of the Privacy Act, 5 U.S.C. 552a.

Request for an accounting means a request made as described in subsection (c)(3) of the Privacy Act, 5 U.S.C. 552a.

§ 1602.2 Requests for access to records.

(a) *How made and addressed.* You may make a request for access to a CSB record about yourself by appearing in person or by writing to the CSB. Your request should be sent or delivered to the CSB's General Counsel, at 2175 K Street, NW., 4th Floor, Washington, DC 20037. For the quickest possible handling, you should mark both your request letter and the envelope ''Privacy Act Request.''

(b) *Description of records sought.* You must describe the records that you want in enough detail to enable CSB personnel to locate the system of records containing them with a reasonable amount of effort. Whenever possible, your request should describe the records sought, the time periods in which you believe they were compiled, and the name or identifying number of each system of records in which you believe they are kept. The CSB publishes notices in the FEDERAL REGISTER that describe its systems of records. A description of the CSB's systems of records also may be found as part of the ''Privacy Act Compilation'' published by the National Archives and Records Administration's Office of the Federal Register. This compilation is available in most large reference and university libraries. This compilation also can be accessed electronically at the Government Printing Office's World Wide Web site (which can be found at *http://www.access.gpo.gov/su_docs*).

(c) *Agreement to pay fees.* If you make a Privacy Act request for access to records, it shall be considered an agreement by you to pay all applicable fees charged under § 1602.9 up to $25.00. The CSB ordinarily will confirm this agreement in an acknowledgment letter. When making a request, you may

specify a willingness to pay a greater or lesser amount.

(d) *Verification of identity.* When you make a request for access to records about yourself, you must verify your identity. You must state your full name, current address, and date and place of birth. You must sign your request and your signature must either be notarized or submitted by you under 28 U.S.C. 1746, a law that permits statements to be made under penalty of perjury as a substitute for notarization. In order to help the identification and location of requested records, you may also, at your option, include your social security number.

(e) *Verification of guardianship.* When making a request as the parent or guardian of a minor or as the guardian of someone determined by a court to be incompetent, for access to records about that individual, you must establish:

(1) The identity of the individual who is the subject of the record, by stating the name, current address, date and place of birth, and, at your option, the social security number of the individual;

(2) Your own identity, as required in paragraph (d) of this section;

(3) That you are the parent or guardian of that individual, which you may prove by providing a copy of the individual's birth certificate showing your parentage or by providing a court order establishing your guardianship; and

(4) That you are acting on behalf of that individual in making the request.

§ 1602.3 Responsibility for responding to requests for access to records.

(a) *In general.* In determining which records are responsive to a request, the CSB ordinarily will include only those records in its possession as of the date the CSB begins its search for them. If any other date is used, the CSB will inform the requester of that date.

(b) *Authority to grant or deny requests.* The CSB's General Counsel, or his/her designee, is authorized to grant or deny any request for access to a record of the CSB.

(c) *Consultations and referrals.* When the CSB receives a request for access to a record in its possession, it will determine whether another agency of the Federal Government is better able to determine whether the record is exempt from access under the Privacy Act. If the CSB determines that it is best able to process the record in response to the request, then it will do so. If the CSB determines that it is not best able to process the record, then it will either:

(1) Respond to the request regarding that record, after consulting with the agency best able to determine whether the record is exempt from access and with any other agency that has a substantial interest in it; or

(2) Refer the responsibility for responding to the request regarding that record to another agency that originated the record (but only if that agency is subject to the Privacy Act). Ordinarily, the agency that originated a record will be presumed to be best able to determine whether it is exempt from access.

(d) *Notice of referral.* Whenever the CSB refers all or any part of the responsibility for responding to your request to another agency, it ordinarily will notify you of the referral and inform you of the name of each agency to which the request has been referred and of the part of the request that has been referred.

(e) *Timing of responses to consultations and referrals.* All consultations and referrals shall be handled according to the date the Privacy Act access request was initially received by the CSB, not any later date.

§ 1602.4 Responses to requests for access to records.

(a) *Acknowledgments of requests.* On receipt of your request, the CSB ordinarily will send an acknowledgment letter, which shall confirm your agreement to pay fees under § 1602.2(c) and may provide an assigned request number for further reference.

(b) *Grants of requests for access.* Once the CSB makes a determination to grant your request for access in whole or in part, it will notify you in writing. The CSB will inform you in the notice of any fee charged under § 1602.9 and will disclose records to you promptly on payment of any applicable fee. If your request is made in person, the

CSB may disclose records to you directly, in a manner not unreasonably disruptive of its operations, on payment of any applicable fee and with a written record made of the grant of the request. If you are accompanied by another person when you make a request in person, you shall be required to authorize in writing any discussion of the records in the presence of the other person.

(c) *Adverse determinations of requests for access.* If the CSB makes an adverse determination denying your request for access in any respect, it will notify you of that determination in writing. Adverse determinations, or denials of requests, consist of: a determination to withhold any requested record in whole or in part; a determination that a requested record does not exist or cannot be located; a determination that what has been requested is not a record subject to the Privacy Act; a determination on any disputed fee matter; and a denial of a request for expedited treatment. The notification letter shall be signed by the General Counsel, or his/her designee, and shall include:

(1) The name and title or position of the person responsible for the denial;

(2) A brief statement of the reason(s) for the denial, including any Privacy Act exemption(s) applied by the CSB in denying the request; and

(3) A statement that the denial may be appealed under § 1602.5(a) and a description of the requirements of § 1602.5(a).

§ 1602.5 Appeals from denials of requests for access to records.

(a) *Appeals.* If you are dissatisfied with the CSB's response to your request for access to records, you may appeal an adverse determination denying your request in any respect to the Privacy Act Appeals Officer of the CSB, 2175 K Street, NW., Suite 400, Washington, DC 20037. You must make your appeal in writing, and it must be received within 60 days of the date of the letter denying your request. Your appeal letter may include as much or as little related information as you wish, as long as it clearly identifies the determination (including the assigned request number, if any) that you are appealing. For the quickest possible handling, you should mark both your appeal letter and the envelope ''Privacy Act Appeal.''

(b) *Responses to appeals.* The decision on your appeal will be made in writing. A decision affirming an adverse determination in whole or in part will include a brief statement of the reason(s) for the affirmance, including any Privacy Act exemption applied, and will inform you of the Privacy Act provisions for court review of the decision. If the adverse determination is reversed or modified on appeal in whole or in part, you will be notified in a written decision and your request will be reprocessed in accordance with that appeal decision.

(c) *When appeal is required.* If you wish to seek review by a court of any adverse determination or denial of a request, you must first appeal it under this section.

§ 1602.6 Requests for amendment or correction of records.

(a) *How made and addressed.* You may make a request for amendment or correction of a CSB record about yourself by following the procedures in § 1602.2. Your request should identify each particular record in question, state the amendment or correction that you want, and state why you believe that the record is not accurate, relevant, timely, or complete. You may submit any documentation that you think would be helpful.

(b) *CSB responses.* Within ten working days of receiving your request for amendment or correction of records, the CSB will send you a written acknowledgment of its receipt of your request, and it will promptly notify you whether your request is granted or denied. If the CSB grants your request in whole or in part, it will describe the amendment or correction made and advise you of your right to obtain a copy of the corrected or amended record. If the CSB denies your request in whole or in part, it will send you a letter stating:

(1) The reason(s) for the denial; and

(2) The procedure for appeal of the denial under paragraph (c) of this section, including the name and business address of the official who will act on your appeal.

(c) *Appeals.* You may appeal a denial of a request for amendment or correction in the same manner as a denial of a request for access to records (see § 1602.5), and the same procedures will be followed. If your appeal is denied, you will be advised of your right to file a Statement of Disagreement as described in paragraph (d) of this section and of your right under the Privacy Act for court review of the decision.

(d) *Statements of Disagreement.* If your appeal under this section is denied in whole or in part, you have the right to file a Statement of Disagreement that states your reason(s) for disagreeing with the CSB's denial of your request for amendment or correction. Statements of Disagreement must be concise, must clearly identify each part of any record that is disputed, and should be no longer than one typed page for each fact disputed. Your Statement of Disagreement must be sent to the CSB, which will place it in the system of records in which the disputed record is maintained and will mark the disputed record to indicate that a Statement of Disagreement has been filed and where in the system of records it may be found.

(e) *Notification of amendment/correction or disagreement.* Within 30 working days of the amendment or correction of a record, the CSB shall notify all persons, organizations, or agencies to which it previously disclosed the record, if an accounting of that disclosure was made, that the record has been amended or corrected. If an individual has filed a Statement of Disagreement, the CSB will attach a copy of it to the disputed record whenever the record is disclosed and may also attach a concise statement of its reason(s) for denying the request to amend or correct the record.

§ 1602.7 Requests for an accounting of record disclosures.

(a) *How made and addressed.* Except where accountings of disclosures are not required to be kept (as stated in paragraph (b) of this section), you may make a request for an accounting of any disclosure that has been made by the CSB to another person, organization, or agency of any record about you. This accounting contains the date, nature, and purpose of each disclosure, as well as the name and address of the person, organization, or agency to which the disclosure was made. Your request for an accounting should identify each particular record in question and should be made by writing to the CSB, following the procedures in § 1602.2.

(b) *Where accountings are not required.* The CSB is not required to provide accountings to you where they relate to disclosures for which accountings are not required to be kept—-in other words, disclosures that are made to employees within the agency and disclosures that are made under the FOIA.

(c) *Appeals.* You may appeal a denial of a request for an accounting to the CSB Appeals Officer in the same manner as a denial of a request for access to records (see § 1602.5) and the same procedures will be followed.

§ 1602.8 Preservation of records.

The CSB will preserve all correspondence pertaining to the requests that it receives under this part, as well as copies of all requested records, until disposition or destruction is authorized by Title 44 of the United States Code or the National Archives and Records Administration's General Records Schedule 14. Records will not be disposed of while they are the subject of a pending request, appeal, or lawsuit under the Privacy Act.

§ 1602.9 Fees.

The CSB will charge fees for duplication of records under the Privacy Act in the same way in which it charges duplication fees under the FOIA (see part 1601, subpart D of this chapter). No search or review fee will be charged for any record.

§ 1602.10 Notice of court-ordered and emergency disclosures.

(a) *Court-ordered disclosures.* When a record pertaining to an individual is required to be disclosed by a court order, the CSB will make reasonable efforts to provide notice of this to the individual. Notice will be given within a reasonable time after the CSB's receipt of the order—except that in a case in which the order is not a matter of public record, the notice will be given only

after the order becomes public. This notice will be mailed to the individual's last known address and will contain a copy of the order and a description of the information disclosed.

(b) *Emergency disclosures.* Upon disclosing a record pertaining to an individual made under compelling circumstances affecting health or safety, the CSB will notify that individual of the disclosure. This notice will be mailed to the individual's last known address and will state the nature of the information disclosed; the person, organization, or agency to which it was disclosed; the date of disclosure; and the compelling circumstances justifying the disclosure.

PART 1603—RULES IMPLEMENTING THE GOVERNMENT IN THE SUNSHINE ACT

Sec.
1603.1 Applicability.
1603.2 Policy.
1603.3 Definitions.
1603.4 Open meetings requirement.
1603.5 Assurance of compliance.
1603.6 Business requiring a meeting.
1603.7 Grounds on which meetings may be closed or information may be withheld.
1603.8 Procedures for closing meetings, or withholding information, and requests by affected persons to close a meeting.
1603.9 Procedures for public announcement of meetings.
1603.10 Changes following public announcement.
1603.11 Transcripts, recordings, or minutes of closed meetings.
1603.12 Availability of transcripts, recordings, and minutes, and applicable fees.
1603.13 Report to Congress.
1603.14 Severability.

AUTHORITY: 5 U.S.C. 552b; 42 U.S.C. 7412(r)(6)(N).

SOURCE: 67 FR 35445, May 20, 2002, unless otherwise noted.

§ 1603.1 Applicability.

(a) This part implements the provisions of the Government in the Sunshine Act, 5 U.S.C. 552b. These procedures apply to meetings, as defined herein, of the Members of the Chemical Safety and Hazard Investigation Board (''CSB'' or ''Board'').

(b) This part does not affect the procedures by which CSB records are made available to the public, which continue to be governed by part 1601 of this chapter pursuant to the Freedom of Information Act, 5 U.S.C. 552, except that the exemptions set forth in § 1603.7 shall govern in the case of any requests made for the transcripts, recordings, and minutes described in § 1603.11.

§ 1603.2 Policy.

It is the policy of the CSB to provide the public with the fullest practicable information regarding the decision-making processes of the Board, while protecting the rights of individuals and the ability of the Board to discharge its statutory functions and responsibilities. The public is invited to attend but not to participate in open meetings. For any open meeting, the Board, by majority vote, may decide to allow for a public comment period immediately following the close of that meeting.

§ 1603.3 Definitions.

As used in this part:

(a) *Days* means calendar days, except where noted otherwise.

(b) *General Counsel* means the Board's principal legal officer, or a CSB attorney serving as Acting General Counsel.

(c) *Meeting* means the deliberations of at least a quorum of Members where such deliberations determine or result in the joint conduct or disposition of official CSB business, and includes conference telephone calls or other exchanges otherwise coming within the definition. A meeting does not include:

(1) Notation voting or similar consideration of business, whether by circulation of material to the Members individually in writing or by a polling of the Members individually by telephone.

(2) Action by at least a quorum of Members to:

(i) Open or to close a meeting or to release or to withhold information pursuant to § 1603.7;

(ii) Set an agenda for a proposed meeting(s);

(iii) Call a meeting on less than seven days' notice as permitted by § 1603.9(b); or

(iv) Change the subject matter or the determination to open or to close a publicly announced meeting under § 1603.10(b).

(3) A session attended by at least a quorum of Members for the purpose of having the Board's staff or expert consultants to the Board brief or otherwise provide information to the Board concerning any matters within the purview of the Board under its authorizing statute, provided that the Board does not engage in deliberations that determine or result in the joint conduct or disposition of official CSB business on such matters.

(4) A session attended by at least a quorum of Members for the purpose of having the Environmental Protection Agency or Occupational Safety and Health Administration (including contractors of those agencies) or other persons or organizations brief or otherwise provide information to the Board concerning any matters within the purview of the Board under its authorizing statute, provided that the Board does not engage in deliberations that determine or result in the joint conduct or disposition of official CSB business on such matters.

(5) A gathering of Members for the purpose of holding informal preliminary discussions or exchange of views which do not effectively predetermine official action.

(d) *Member* means an individual duly appointed and confirmed to the collegial body known as the Board.

(e) *Reporter* means a CSB employee designated by the General Counsel, under § 1603.5(c), to attend and prepare a written summary of all briefings described in paragraphs (c)(3) and (c)(4) of this section and all informal preliminary discussions described in paragraph (c)(5) of this section.

(f) *Sunshine Act* means the Government in the Sunshine Act, 5 U.S.C. 552b.

§ 1603.4 Open meetings requirement.

Any meetings of the Board, as defined in § 1603.3, shall be conducted in accordance with this part. Except as provided in § 1603.7, the Board's meetings, or portions thereof, shall be open to public observation.

§ 1603.5 Assurance of compliance.

(a) The General Counsel or another attorney designated by the General Counsel will attend and monitor all briefings described in § 1603.3(c)(3) and (c)(4) and all informal preliminary discussions described in § 1603.3(c)(5), to assure that those gatherings do not proceed to the point of becoming deliberations and meetings for Sunshine Act purposes.

(b) The General Counsel or the designated attorney will inform the Board Members if developing discussions at a briefing or gathering should be deferred until a notice of an open or closed meeting can be published in the FEDERAL REGISTER, and a meeting conducted pursuant to the Sunshine Act and this part.

(c) For each briefing described in § 1603.3(c)(3) or (c)(4) and each informal preliminary discussion described in § 1603.3(c)(5), the General Counsel is hereby authorized to designate a CSB employee, other than the attorney referred to in paragraph (a) of this section, to serve as a reporter. An employee may be designated as reporter for a single briefing or informal discussion or for a series of briefings or discussions. The reporter shall attend and prepare a written summary of each briefing(s) or informal discussion(s) for which he/she has been designated. The reporter must prepare the summary of a particular briefing or informal discussion within five business days after the date of that briefing or discussion. The reporter must then submit the summary to the General Counsel or the designated attorney who attended the briefing or informal discussion that is the subject of the summary for review and approval as a fair and accurate summary of that briefing or discussion. The written summaries of briefings and informal discussions shall be maintained in the Office of General Counsel.

§ 1603.6 Business requiring a meeting.

The Board may, by majority vote of its Members, determine that particular items or classes of Board business cannot be accomplished by notation voting, but must instead be decided by a recorded vote at a meeting, as defined in § 1603.3(c).

§ 1603.7 Grounds on which meetings may be closed or information may be withheld.

Except in a case where the Board finds that the public interest requires otherwise, a meeting may be closed and information pertinent to such meeting otherwise required by §§ 1603.8, 1603.9, and 1603.10 to be disclosed to the public may be withheld if the Board properly determines that such meeting or portion thereof or the disclosure of such information is likely to:

(a) Disclose matters that are:

(1) Specifically authorized under criteria established by an Executive Order to be kept secret in the interests of national defense or foreign policy; and

(2) In fact, properly classified pursuant to such Executive Order. In making the determination that this exemption applies, the Board shall rely upon the classification assigned to a document by the Environmental Protection Agency, Occupational Safety and Health Administration, or other originating agency;

(b) Relate solely to the internal personnel rules and practices of the CSB;

(c) Disclose matters specifically exempted from disclosure by statute (other than 5 U.S.C. 552), provided that such statute:

(1) Requires that the matters be withheld from the public in such a manner as to leave no discretion on the issue; or

(2) Establishes particular criteria for withholding or refers to particular types of matters to be withheld;

(d) Disclose trade secrets and commercial or financial information obtained from a person and privileged or confidential;

(e) Involve accusing any person of a crime, or formally censuring any person;

(f) Disclose information of a personal nature where disclosure would constitute a clearly unwarranted invasion of personal privacy;

(g) Disclose investigatory records compiled for law enforcement purposes, or information which if written would be contained in such records, but only to the extent that the production of such records or information would:

(1) Interfere with enforcement proceedings;

(2) Deprive a person of a right to a fair trial or an impartial adjudication;

(3) Constitute an unwarranted invasion of personal privacy;

(4) Disclose the identity of a confidential source and, in the case of a record compiled by a criminal law enforcement authority in the course of a criminal investigation or by an agency conducting a lawful national security intelligence investigation, confidential information furnished only by the confidential source;

(5) Disclose investigative techniques and procedures; or

(6) Endanger the life or physical safety of law enforcement personnel;

(h) Disclose information the premature disclosure of which would be likely to significantly frustrate implementation of a proposed action of the CSB, except that this paragraph shall not apply in any instance where the Board has already disclosed to the public the content or nature of its proposed action or is required by law to make such disclosure on its own initiative prior to taking final action on such proposal;

(i) Specifically concern the Board's issuance of a subpoena, or the CSB's participation in a civil action or proceeding, an action in a foreign court or international tribunal, or an arbitration, or the initiation, conduct, or disposition by the CSB of a particular case of formal agency adjudication pursuant to the procedures in 5 U.S.C. 554 or otherwise involving a determination on the record after opportunity for a hearing; or

(j) Disclose other information for which the Government in the Sunshine Act provides an exemption to the open meeting requirements of that Act.

§ 1603.8 Procedures for closing meetings, or withholding information, and requests by affected persons to close a meeting.

(a) A meeting shall not be closed, or information pertaining thereto withheld, unless a majority of all Members votes to take such action. A majority of the Board may act by taking a single vote with respect to any action under § 1603.7. A single vote is permitted with respect to a series of meetings, a portion or portions of which are

proposed to be closed to the public, or with respect to any information concerning such series of meetings, so long as each meeting in such series involves the same particular subject matters and is scheduled to be held no more than thirty days after the initial meeting in such series. Each Member's vote under this paragraph shall be recorded and proxies are not permitted.

(b) Any person whose interest may be directly affected if a portion of a meeting is open may request the Board to close that portion on any of the grounds referred to in §1603.7(e) through (g). Requests, with reasons in support thereof, should be submitted in writing, no later than two days before the meeting in question, to the General Counsel, Chemical Safety and Hazard Investigation Board, 2175 K Street, NW., Suite 400, Washington, DC 20037. In motion of any Member, the Board shall determine by recorded vote whether to grant the request.

(c) Within one working day of any vote taken pursuant to this section, the CSB shall make available a written copy of such vote reflecting the vote of each Member on the question and, if a portion of a meeting is to be closed to the public, a full written explanation of its action closing the meeting and a list of all persons expected to attend and their affiliation.

(d) Before every closed meeting, the General Counsel of the CSB shall publicly certify that, in his/her opinion, the meeting may be closed to the public and shall state each relevant exemption provision. If the General Counsel invokes the exemption for classified or sensitive unclassified information under §1603.7(a), he/shall rely upon the classification or designation assigned to the document containing such information by the Environmental Protection Agency, Occupational Safety and Health Administration, or other originating agency. A copy of such certification, together with a statement setting forth the time and place of the meeting and the persons present, shall be retained by the Board as part of the transcript, recording, or minutes required by §1603.11.

§1603.9 Procedures for public announcement of meetings.

(a) For each meeting, the CSB shall make public announcement, at least one week before the meeting, of:

(1) The time of the meeting;

(2) The place of the meeting;

(3) The subject matter of the meeting;

(4) Whether the meeting is to be open or closed; and

(5) The name and business telephone number of the offical designated by the CSB to respond to requests for information about the meeting.

(b) The one week advance notice required by paragraph (a) of this section may be reduced only if:

(1) A majority of all Members determines by recorded vote that CSB business requires that such meeting be scheduled in less than seven days; and

(2) The public announcement required by paragraph (a) of this section is made at the earliest practicable time.

(c) Immediately following each public announcement required by this section, or by §1603.10, the CSB shall submit a notice of public announcement for publication in the FEDERAL REGISTER.

§1603.10 Changes following public announcement.

(a) The time or place of a meeting may be changed following the public announcement only if the CSB publicly announces such change at the earliest practicable time. Members need not approve such change.

(b) A meeting may be cancelled, or the subject matter of a meeting or the determination of the Board to open or to close a meeting, or a portion thereof, to the public may be changed following public announcement only if:

(1) A majority of all Members determines by recorded vote that CSB business so requires and that no earlier announcement of the cancellation or change was possible; and

(2) The CSB publicly announces such cancellation or change and the vote of each Member thereon at the earliest practicable time.

(c) The deletion of any subject matter announced for a meeting is not a change requiring the approval of the

Board under paragraph (b) of this section.

§ 1603.11 Transcripts, recordings, or minutes of closed meetings.

(a) Along with the General Counsel's certification referred to in § 1603.8(d), the CSB shall maintain a complete transcript or electronic recording adequate to record fully the proceedings of each meeting, or a portion thereof, closed to the public. The CSB may maintain a set of minutes in lieu of such transcript or recording for meetings closed pursuant to § 1603.7(i). Such minutes shall fully and clearly describe all matters discussed and shall provide a full and accurate summary of any actions taken, and the reasons therefor, including a description of each of the views expressed on any item and the record of any rollcall vote. All documents considered in connection with any actions shall be identified in such minutes.

(b) The CSB shall maintain a complete verbatim copy of the transcript, a complete copy of the minutes, or a complete electronic recording of each meeting, or a portion thereof, closed to the public for at least two years after such meeting, or until one year after the conclusion of any CSB proceeding with respect to which the meeting, or a portion thereof, was held, whichever occurs later.

§ 1603.12 Availability of transcripts, recordings, and minutes, and applicable fees.

The CSB shall make promptly available to the public the transcript, electronic recording, or minutes of the discussion of any item on the agenda or of any testimony received at a meeting, except for such item, or items, of discussion or testimony as determined by the CSB to contain matters which may be withheld under the exemptive provisions of § 1603.7. Copies of the nonexempt portions of the transcript or minutes, or transcription of such recordings disclosing the identity of each speaker, shall be furnished to any person at the actual cost of transcription or duplication. Requests for transcripts, recordings, or minutes shall be made in writing to the General Counsel of the CSB, 2175 K Street, NW., Suite 400, Washington, DC 20037.

§ 1603.13 Report to Congress.

The CSB General Counsel shall annually report to the Congress regarding the Board's compliance with the Government in the Sunshine Act, including a tabulation of the total number of open meetings, the total number of closed meetings, the reasons for closing such meetings and a description of any litigation brought against the Board pursuant to the Government in the Sunshine Act, including any cost assessed against the Board in such litigation (whether or not paid by the Board).

§ 1603.14 Severability.

If any provision of this part or the application of such provision to any person or circumstances, is held invalid, the remainder of this part or the application of such provision to persons or circumstances other than those as to which it is held invalid, shall not be affected thereby.

PART 1610—ADMINISTRATIVE INVESTIGATIONS

Sec.

1610.1 Representation of witnesses in investigations.
1610.2 Repeated attorney misconduct, sanctions, hearings.
1610.3 Sequestration of witnesses and exclusion of Counsel.
1610.4 Deposition Transcripts.

AUTHORITY: 42 U.S.C. 7412(r)(6)(C)(i), 7412(r)(6)(L), 7412(r)(6)(N).

Section 1610.4 also issued under 5 U.S.C. 555.

SOURCE: 66 FR 1050, Jan. 5, 2001, unless otherwise noted.

§ 1610.1 Representation of witnesses in investigations.

(a) *Witnesses who are compelled to appear.* Witnesses who are compelled to appear for a deposition (i.e., by subpoena) are entitled to be accompanied, represented, and advised by an attorney as follows:

(1) Counsel for a witness may advise the witness with respect to any question asked where it is claimed that the testimony or other evidence sought from a witness is outside the scope of the investigation, or that the witness

is privileged to refuse to answer a question or to produce other evidence. For these allowable objections, the witness or counsel for the witness may object on the record to the question or requirement and may state briefly and precisely the ground therefor. If the witness refuses to answer a question, then counsel may briefly state on the record that counsel has advised the witness not to answer the question and the legal grounds for such refusal. The witness and his or her counsel shall not otherwise object to or refuse to answer any question, and they shall not otherwise interrupt the oral examination.

(2) Any objections made will be treated as continuing objections and preserved throughout the further course of the deposition without the necessity for repeating them as to any similar line of inquiry. Cumulative objections are unnecessary. Repetition of the grounds for any objection will not be allowed.

(3) Counsel for a witness may not, for any purpose or to any extent not allowed by paragraphs (a)(1) and (2) of this section, interrupt the examination of the witness by making any objections or statements on the record.

(4) Following completion of the examination of a witness, counsel for the witness may on the record request the person conducting the deposition to permit the witness to clarify any of his or her answers. The grant or denial of such request shall be within the sole discretion of the person conducting the deposition.

(5) The person conducting the deposition shall take all necessary action to regulate the course of the deposition, to avoid delay, and to prevent or restrain disorderly, dilatory, obstructionist, or contumacious conduct, or contemptuous language. Such person shall, for reasons stated on the record, immediately report to the Board any instances where an attorney has allegedly refused to comply with his or her directions, or has allegedly engaged in disorderly, dilatory, obstructionist, or contumacious conduct, or contemptuous language in the course of the deposition. The Board may thereupon take such further action, if any, as the circumstances warrant, including exclusion of that attorney from further participation in the particular investigation.

(b) *Voluntary interviews.* Witnesses appearing voluntarily do not have a right to have an attorney present during questioning. The Investigator-in-Charge (IIC), in consultation with the General Counsel, may permit a witness to be accompanied by an attorney or non-attorney representative. If so accompanied, the role of the attorney or non-attorney representative is limited to raising objections to questions that are outside the scope of the investigation and to advising the witness with respect to any legal privilege such as, for example, under the Fifth Amendment to the U. S. Constitution. Attorney and non-attorney representatives may not represent more than one witness in each investigation in this fashion, absent the consent of the IIC and the General Counsel.

§ 1610.2 Repeated attorney misconduct, sanctions, hearings.

(a) If an attorney who has been sanctioned by the Board for disorderly, dilatory, obstructionist, or contumacious conduct, or contemptuous language in the course of a deposition under § 1610.1(a)(5) is sanctioned again by the Board in a subsequent deposition or investigation, the Board, after offering the attorney an opportunity to be heard, may reprimand, censure the attorney, or suspend the attorney from further practice before the Board for such period of time as the Board deems advisable.

(b) A reprimand or a censure shall be ordered with grounds stated on the record of the proceeding. A suspension shall be in writing, shall state the grounds on which it is based, and shall advise the person suspended of the right to appeal.

(c) An attorney suspended pursuant to this section may within ten (10) days after issuance of the order file an appeal with the Board. The appeal shall be in writing and state concisely, with supporting argument, why the appellant believes the order was erroneous, either as a matter of fact or law. If necessary for a full and fair consideration of the facts, the Board as a whole may conduct further evidentiary hearings,

or may refer the matter to another presiding officer for development of a record. Such presiding officer may be an attorney who is a Member of the Board or is employed in the Office of General Counsel, or an administrative law judge detailed from another agency pursuant to 5 U.S.C. 3344. If the Board refers the matter to a presiding officer, unless the Board provides specific directions to the presiding officer, that officer shall determine the procedure to be followed and who shall present evidence, subject to applicable provisions of law. Such hearing shall commence as soon as possible. If no appeal is taken of a suspension, or, if the suspension is upheld at the conclusion of the appeal, the presiding officer, or the Board, as appropriate, shall notify the state bar(s) to which the attorney is admitted. Such notification shall include copies of the order of suspension, and, if an appeal was taken, briefs of the parties, and the decision of the Board.

[66 FR 17363, Mar. 30, 2001]

§ 1610.3 Sequestration of witnesses and exclusion of Counsel.

(a) All witnesses compelled by subpoena to submit to CSB depositions shall be sequestered unless the official conducting the depositions permits otherwise.

(b) Any witness compelled by subpoena to appear at a deposition during a CSB investigation may be accompanied, represented, and advised by an attorney in good standing of his or her choice, pursuant to § 1610.1. However, when the CSB official conducting the investigation determines, after consultation with the Office of General Counsel, that the CSB has concrete evidence that the presence of an attorney representing multiple interests would obstruct and impede the investigation or inspection, the CSB official may prohibit that counsel from being present during the deposition.

(c) The deposing official is to provide a witness whose counsel has been excluded under paragraph (b) of this section, and the witness' counsel, a written statement of the reasons supporting the decision to exclude. This statement, which must be provided no later than five working days after exclusion, must explain the basis for the counsel's exclusion. This statement must also advise the witness of the witness' right to appeal the exclusion decision and obtain an automatic stay of the effectiveness of the subpoena by filing a motion to quash the subpoena with the Board within five days of receipt of this written statement.

(d) Within five days after receipt of the written notification required in paragraph (c) of this section, a witness whose counsel has been excluded may appeal the exclusion decision by filing a motion to quash the subpoena with the Board. The filing of the motion to quash will stay the effectiveness of the subpoena pending the Board's decision on the motion.

(e) If a witness' counsel is excluded under paragraph (b) of this section, the deposition may, at the witness' request, either proceed without counsel or be delayed for a reasonable period of time to permit the retention of new counsel. The deposition may also be rescheduled to a subsequent date established by the CSB, although the deposition shall not be rescheduled by the CSB to a date that precedes the expiration of the time provided in paragraph (d) of this section for appeal of the exclusion of counsel, unless the witness consents to an earlier date.

[66 FR 17363, Mar. 30, 2001]

§ 1610.4 Deposition Transcripts.

(a) Transcripts of depositions of witnesses compelled by subpoena to appear during a Board investigation, shall be recorded solely by an official reporter designated by the person conducting the deposition.

(b) Such a witness, after completing the compelled testimony, may file a petition with the Board's General Counsel to procure a copy of the official transcript of such testimony. The General Counsel shall rule on the petition, and may deny it for good cause. Whether or not such a petition is filed, the witness (and his or her attorney), upon proper identification, shall have the right to inspect the official transcript of the witness' own testimony. If such a petition is denied by the General Counsel, he shall inform the petitioner of the right to inspect the transcript.

(c) Good cause for denying a witness' petition to procure a transcript of his or her testimony may include, but shall not be limited to, the protection of: trade secrets and confidential business information contained in the testimony, security-sensitive operational and vulnerability information, and the integrity of Board investigations.

[68 FR 4393, Jan. 29, 2003]

PART 1611—TESTIMONY BY EMPLOYEES IN LEGAL PROCEEDINGS

Sec.

1611.1 General.
1611.2 Definitions.
1611.3 Scope of permissible testimony.
1611.4 Manner in which testimony is given in civil litigation.
1611.5 Request for testimony in civil litigation.
1611.6 Testimony of former CSB employees.
1611.7 Testimony by current CSB employees regarding prior activity.
1611.8 Procedure in the event of a subpoena in civil litigation.
1611.9 Testimony in Federal, State, or local criminal investigations and other proceedings.
1611.10 Obtaining CSB investigation reports and supporting information.

AUTHORITY: 5 U.S.C. 301, 42 U.S.C. 7412(r)(6)(G).

SOURCE: 66 FR 17366, Mar. 30, 2001, unless otherwise noted.

§ 1611.1 General.

(a) This part prescribes policies and procedures regarding the testimony of employees of the Chemical Safety and Hazard Investigation Board (CSB) in suits or actions for damages and criminal proceedings arising out of chemical incidents when such testimony is in an official capacity and arises out of or is related to an incident investigation. The purpose of this part is to ensure that the time of CSB employees is used only for official purposes, to avoid embroiling the CSB in controversial issues that are not related to its duties, to avoid spending public funds for non-CSB purposes, to preserve the impartiality of the CSB, and to prohibit the discovery of opinion testimony.

(b) This part does not apply to:

(1) Congressional requests or subpoenas for testimony or records;

(2) Federal court civil proceedings in which the United States is a party;

(3) Federal administrative proceedings;

(4) Employees who voluntarily testify, while on their own time or in approved leave status, as private citizens as to facts or events that are not related to the official business of the CSB. The employee must state for the record that the testimony represents the employee's own views and is not necessarily the official position of the CSB.

(c) This part only provides guidance for the internal operations of the CSB, and neither creates nor is intended to create any enforceable right or benefit against the United States.

§ 1611.2 Definitions.

CSB incident report means the report containing the CSB's determinations, including the probable cause of an incident, issued either as a narrative report or in a computer format. Pursuant to 42 U.S.C. 7412(r)(6)(G), no part of the conclusions, findings or recommendations of the CSB relating to an accidental release or the investigation thereof, may be admitted as evidence or used in any suit or action for damages growing out of any matter mentioned in such report.

Employee, for the purpose of this part and part 1612 of this chapter, refers to current or former CSB Board Members or employees, including student interns, and contractors, contract employees, or consultants (and their employees). This definition does not include persons who are no longer employed by or under contract to the CSB, and who are retained or hired as expert witnesses or agree to testify about matters that do not involve their work for the CSB.

[66 FR 17366, Mar. 30, 2001, as amended at 66 FR 23854, May 10, 2001]

§ 1611.3 Scope of permissible testimony.

(a) The statute creating the CSB, 42 U.S.C. 7412(r)(6)(G), precludes the use or admission into evidence of CSB investigative reports in any suit or action for damages arising from such incidents. This provision would be undermined if expert opinion testimony of

CSB employees, which may be reflected in the views of the CSB expressed in its reports, were admitted in evidence or used in litigation arising out of an incident. The CSB relies heavily upon its investigators' opinions in its deliberations. Furthermore, the use of CSB employees as experts to give opinion testimony would impose a significant administrative burden on the CSB's investigative staff.

(b) For the reasons stated in paragraph (a) of this section and § 1611.1, CSB employees may only testify as to the factual information they obtained during the course of an investigation. However, they shall decline to testify regarding matters beyond the scope of their investigation, and they shall not give any expert or opinion testimony.

(c) CSB employees may testify about the firsthand information they obtained during an investigation that is not reasonably available elsewhere, including their own factual observations. Consistent with the principles cited in § 1611.1 and this section, current CSB employees are not authorized to testify regarding other employee's observations or reports, or other types of CSB documents, including but not limited to safety recommendations, safety studies, safety proposals, safety accomplishments, reports labeled studies, and analysis reports, as they contain staff analysis and/or CSB conclusions.

(d) Consistent with 42 U.S.C. 7412(r)(6)(G), a CSB employee may not use the CSB's investigation report for any purpose during his testimony.

(e) No employee may testify in any matter absent advance approval by the General Counsel as provided in this part.

§ 1611.4 Manner in which testimony is given in civil litigation.

(a) Testimony of CSB employees with unique, firsthand information may be made available for use in civil actions or civil suits for damages arising out of incidents through depositions or written interrogatories. CSB employees are not permitted to appear and testify in court in such actions.

(b) Normally, depositions will be taken and interrogatories answered at the CSB's headquarters in Washington, DC, and at a time arranged with the employee reasonably fixed to avoid substantial interference with the performance of his or her duties.

(c) CSB employees are authorized to testify only once in connection with any investigation they have made of an incident. Consequently, when more than one civil lawsuit arises as a result of an incident, it shall be the duty of counsel seeking the employee's deposition to ascertain the identity of all parties to the multiple lawsuits and their counsel, and to advise them of the fact that a deposition has been granted, so that all interested parties may be afforded the opportunity to participate therein.

(d) Upon completion of the deposition of a CSB employee, the original of the transcript will be provided to the deponent for signature and correction, which the CSB does not waive. A copy of the transcript of the testimony and any videotape shall be furnished, at the expense of the party requesting the deposition, to the CSB's General Counsel at Washington, DC headquarters for the CSB's files.

(e) If CSB employees are required to travel to testify, under the relevant substantive and procedural laws and regulations the party requesting the testimony must pay for the costs, including travel expenses. Costs must be paid by check or money order payable to the Chemical Safety and Hazard Investigation Board.

§ 1611.5 Request for testimony in civil litigation.

(a) A written request for testimony by deposition or interrogatories of a CSB employee relating to an incident shall be addressed to the General Counsel, who may approve or deny the request consistent with this part. Such request shall set forth the title of the civil case, the court, the date and place of the incident, the reasons for desiring the testimony, and a showing that the information desired is not reasonably available from other sources.

(b) Where testimony is sought in connection with civil litigation, the General Counsel shall not approve it until the CSB's investigation report is issued.

(c) The General Counsel shall attach to the approval of any deposition such

reasonable conditions as may be deemed appropriate in order that the testimony will be consistent with § 1611.1, will be limited to the matters delineated in § 1611.3, will not interfere with the performance of the duties of the employee as set forth in § 1611.4, and will otherwise conform to the policies of this part.

(d) A subpoena shall not be served upon a CSB employee in connection with the taking of a deposition in civil litigation.

§ 1611.6 Testimony of former CSB employees.

(a) It is not necessary to request CSB approval for testimony of a former CSB employee, nor is such testimony limited to depositions. However, the scope of permissible testimony continues to be constrained by all the limitations set forth in § 1611.3 and § 1611.4.

(b) Any former employee who is served with a subpoena to appear and testify in connection with civil litigation that relates to his or her work with the CSB, shall immediately notify the CSB General Counsel and provide all information requested by the General Counsel.

[66 FR 17366, Mar. 30, 2001, as amended at 66 FR 23854, May 10, 2001]

§ 1611.7 Testimony by current CSB employees regarding prior activity.

Any testimony regarding any incident within the CSB's jurisdiction, or any expert testimony arising from employment prior to CSB service is prohibited absent approval by the General Counsel. Approval shall only be given if testimony will not violate § 1611.1 and § 1611.3, and is subject to whatever conditions the General Counsel finds necessary to promote the purposes of this part as set forth in § 1611.1 and § 1611.3.

§ 1611.8 Procedure in the event of a subpoena in civil litigation.

(a) If the CSB employee has received a subpoena to appear and testify in connection with civil litigation, a request for his deposition shall not be approved until the subpoena has been withdrawn.

(b) Upon receipt of a subpoena, the employee shall immediately notify the General Counsel and provide all information requested by the General Counsel.

(c) The General Counsel shall determine the course of action to be taken and will so advise the employee.

§ 1611.9 Testimony in Federal, State, or local criminal investigations and other proceedings.

(a) As with civil litigation, the CSB prefers that testimony be taken by deposition if court rules permit, and that testimony await the issuance of the investigation report. The CSB recognizes, however, that in the case of coroner's inquests and grand jury proceedings this may not be possible. The CSB encourages those seeking testimony of CSB employees to contact the General Counsel as soon as such testimony is being considered. Whenever the intent to seek such testimony is communicated to the employee, he shall immediately notify the General Counsel.

(b) In any case, CSB employees are prohibited from testifying in any civil, criminal, or other matter, either in person or by deposition or interrogatories, absent advance approval of the General Counsel.

(c) If permission to testify by deposition or in person is granted, testimony shall be limited as set forth in § 1611.3. Only factual testimony is authorized; no expert or opinion testimony shall be given.

§ 1611.10 Obtaining CSB investigation reports and supporting information.

It is the responsibility of the individual requesting testimony to obtain desired documents. There are a number of ways to obtain CSB investigation reports, and accompanying investigation docket files. The rules at part 1612 of this chapter explain CSB procedures for production of records in legal proceedings, and the CSB's Freedom of Information Act rules at part 1601 of this chapter explain CSB procedures for producing documents more generally. See also the information available on the CSB web site, at www.csb.gov. You may also call the CSB Office of General Counsel, at (202) 261–7600. Documents will not be supplied by witnesses at

depositions, nor will copying services be provided by deponents.

PART 1612—PRODUCTION OF RECORDS IN LEGAL PROCEEDINGS

Sec.
1612.1 Purpose and scope.
1612.2 Applicability.
1612.3 Published reports and material contained in the public incident investigation dockets.
1612.4 Requests for authentication or certification of records.
1612.5 Other material.

AUTHORITY: 5 U.S.C. 301, 42 U.S.C. 7412(r)(6)(G).

SOURCE: 66 FR 17366, Mar. 30, 2001, unless otherwise noted.

§ 1612.1 Purpose and scope.

(a) This part sets forth procedures to be followed when requesting material for use in legal proceedings (including administrative proceedings) in which the Chemical Safety and Hazard Investigation Board (CSB) is not a party, and procedures to be followed by the employee upon receipt of a subpoena, order, or other demand (collectively referred to here as a demand) for such material by a court or other competent authority or by a private litigant. *Material,* as used in this part, means any type of physical or documentary evidence, including but not limited to paper documents, electronic media, videotapes, audiotapes, etc.

(b) The purposes of this part are to:

(1) Conserve the time of employees for conducting official business;

(2) Minimize the possibility of involving the CSB in controversial issues not related to its mission;

(3) Maintain the impartiality of the CSB among private litigants;

(4) Avoid spending the time and money of the United States for private purposes; and

(5) To protect confidential, sensitive information, and the deliberative processes of the CSB.

§ 1612.2 Applicability.

This part applies to requests to produce material concerning information acquired in the course of performing official duties or because of the employee's official status. Specifically, this part applies to requests for: material contained in CSB files; and any information or material acquired by an employee of the CSB in the performance of official duties or as a result of the employee's status. Two sets of procedures are here established, dependent on the type of material sought. Rules governing requests for employee testimony, as opposed to material production, can be found at part 1611 of this chapter. Document production shall not accompany employee testimony, absent compliance with this part and General Counsel approval.

§ 1612.3 Published reports and material contained in the public incident investigation dockets.

(a) Demands for published investigation reports should be directed to the Office of Congressional and Public Affairs, U.S. Chemical Safety and Hazard Investigation Board, 2175 K Street, NW, Suite 400, Washington, DC 20037. Demands for material contained in the CSB's official public docket files of its incident investigations shall be submitted, in writing, to CSB Records Officer, U.S. Chemical Safety and Hazard Investigation Board, 2175 K Street, NW, Suite 400, Washington, DC 20037. For information regarding the types of documents routinely issued by the CSB, see part 1601 of this chapter.

(b) No subpoena shall be issued to obtain materials subject to this section, and any subpoena issued shall be required to be withdrawn prior to release of the requested information. Payment of reproduction fees may be required in advance.

§ 1612.4 Requests for authentication or certification of records.

The CSB may authenticate or certify records to facilitate their use as evidence. Requests for certified copies should be made to the General Counsel at least 30 days before the date they will be needed. The CSB may charge a certification fee of $5.00 per document.

§ 1612.5 Other material.

(a) *Production prohibited unless approved.* Except in the case of the material referenced in § 1612.3, no employee or former employee of the CSB shall, in

response to a demand of a private litigant, court, or other authority, produce any material contained in the files of the CSB (whether or not agency records under 5 U.S.C. 552) or produce any material acquired as part of the performance of the person's official duties or because of the person's official status, without the prior written approval of the General Counsel.

(b) *Procedures to be followed for the production of material under this section.*

(1) All demands for material shall be submitted to the General Counsel at CSB headquarters, 2175 K Street, NW., Suite 400, Washington, DC 20037. If an employee receives a demand, he shall forward it immediately to the General Counsel.

(2) Each demand must contain an affidavit by the party seeking the material or his attorney setting forth the material sought and its relevance to the proceeding, and containing a certification, with support, that the information is not available from other sources, including CSB materials described in § 1612.3 and part 1601 of this chapter.

(3) In the absence of General Counsel approval of a demand, the employee is not authorized to comply with the demand.

(4) The General Counsel shall advise the requester of approval or denial of the demand, and may attach whatever conditions to approval considered appropriate or necessary to promote the purposes of this part. The General Counsel may also permit exceptions to any requirement in this part when necessary to prevent a miscarriage of justice, or when the exception is in the best interests of the CSB and/or the United States.

PARTS 1613–1699 [RESERVED]

CHAPTER VII—ENVIRONMENTAL PROTECTION AGENCY AND DEPARTMENT OF DEFENSE; UNIFORM NATIONAL DISCHARGE STANDARDS FOR VESSELS OF THE ARMED FORCES

Part		*Page*
1700	Uniform National Discharge Standards for vessels of the Armed Forces	711

PART 1700—UNIFORM NATIONAL DISCHARGE STANDARDS FOR VESSELS OF THE ARMED FORCES

Subpart A—Scope

Sec.
1700.1 Applicability.
1700.2 Effect.
1700.3 Definitions.

Subpart B—Discharge Determinations

1700.4 Discharges requiring control.
1700.5 Discharges not requiring control.

Subpart C—Effect on States

1700.6 Effect on State and local statutes and regulations.

NO-DISCHARGE ZONES

1700.7 No-discharge zones.
1700.8 Discharges for which no-discharge zones can be established.
1700.9 No-discharge zones by State prohibition.
1700.10 No-discharge zones by EPA prohibition.

STATE PETITION FOR REVIEW

1700.11 State petition for review of determinations or standards.
1700.12 Petition requirements.
1700.13 Petition decisions.

Subpart D—Marine Pollution Control Device (MPCD) Performance Standards

1700.14 Marine Pollution Control Device (MPCD) Performance Standards. [Reserved]

AUTHORITY: 33 U.S.C. 1322, 1361.

SOURCE: 64 FR 25134, May 10, 1999, unless otherwise noted.

Subpart A—Scope

§ 1700.1 Applicability.

(a) This part applies to the owners and operators of Armed Forces vessels, except where the Secretary of Defense finds that compliance with this part is not in the interest of the national security of the United States. This part does not apply to vessels while they are under construction, vessels in drydock, amphibious vehicles, or vessels under the jurisdiction of the Department of Transportation other than those of the Coast Guard.

(b) This part also applies to States and political subdivisions of States.

§ 1700.2 Effect.

(a) This part identifies those discharges, other than sewage, incidental to the normal operation of Armed Forces vessels that require control within the navigable waters of the United States and the waters of the contiguous zone, and those discharges that do not require control. Discharges requiring control are identified in § 1700.4. Discharges not requiring control are identified in § 1700.5. Federal standards of performance for each required Marine Pollution Control Device are listed in § 1700.14. This part is not applicable beyond the contiguous zone.

(b) This part prohibits States and their political subdivisions from adopting or enforcing State or local statutes or regulations controlling the discharges from Armed Forces vessels listed in §§ 1700.4 and 1700.5 according to the timing provisions in § 1700.6, except to establish a no-discharge zone by State prohibition in accordance with § 1700.9, or to apply for a no-discharge zone by EPA prohibition in accordance with § 1700.10. This part also provides a mechanism for States to petition the Administrator and the Secretary to review a determination of whether a discharge requires control, or to review a Federal standard of performance for a Marine Pollution Control Device, in accordance with §§ 1700.11 through 1700.13.

§ 1700.3 Definitions.

Administrator means the Administrator of the United States Environmental Protection Agency or that person's authorized representative.

Armed Forces vessel means a vessel owned or operated by the United States Department of Defense or the United States Coast Guard, other than vessels that are time or voyage chartered by the Armed Forces, vessels of the U.S. Army Corps of Engineers, or vessels that are memorials or museums.

Discharge incidental to the normal operation of a vessel means a discharge, including, but not limited to: graywater, bilgewater, cooling water, weather deck runoff, ballast water, oil water

separator effluent, and any other pollutant discharge from the operation of a marine propulsion system, shipboard maneuvering system, crew habitability system, or installed major equipment, such as an aircraft carrier elevator or a catapult, or from a protective, preservative, or absorptive application to the hull of a vessel; and a discharge in connection with the testing, maintenance, and repair of any of the aforementioned systems whenever the vessel is waterborne, including pierside. A discharge incidental to normal operation does not include:

(1) Sewage;

(2) A discharge of rubbish, trash, or garbage;

(3) A discharge of air emissions resulting from the operation of a vessel propulsion system, motor driven equipment, or incinerator;

(4) A discharge that requires a National Pollutant Discharge Elimination System (NPDES) permit under the Clean Water Act; or

(5) A discharge containing source, special nuclear, or byproduct materials regulated by the Atomic Energy Act.

Environmental Protection Agency, abbreviated EPA, means the United States Environmental Protection Agency.

Marine Pollution Control Device, abbreviated MPCD, means any equipment or management practice installed or used on an Armed Forces vessel that is designed to receive, retain, treat, control, or discharge a discharge incidental to the normal operation of a vessel, and that is determined by the Administrator and Secretary to be the most effective equipment or management practice to reduce the environmental impacts of the discharge consistent with the considerations in Clean Water Act section 312(n)(2)(B).

No-discharge zone means an area of specified waters established pursuant to this regulation into which one or more specified discharges incidental to the normal operation of Armed Forces vessels, whether treated or untreated, are prohibited.

Secretary means the Secretary of the United States Department of Defense or that person's authorized representative.

United States includes the States, the District of Columbia, the Commonwealth of Puerto Rico, the Virgin Islands, Guam, American Samoa, the Canal Zone, and the Trust Territory of the Pacific Islands.

Vessel includes every description of watercraft or other artificial contrivance used, or capable of being used, as a means of transportation on navigable waters of the United States or waters of the contiguous zone, but does not include amphibious vehicles.

Subpart B—Discharge Determinations

§ 1700.4 Discharges requiring control.

For the following discharges incidental to the normal operation of Armed Forces vessels, the Administrator and the Secretary have determined that it is reasonable and practicable to require use of a Marine Pollution Control Device for at least one class of vessel to mitigate adverse impacts on the marine environment:

(a) Aqueous Film-Forming Foam: the firefighting foam and seawater mixture discharged during training, testing, or maintenance operations.

(b) Catapult Water Brake Tank & Post-Launch Retraction Exhaust: the oily water skimmed from the water tank used to stop the forward motion of an aircraft carrier catapult, and the condensed steam discharged when the catapult is retracted.

(c) Chain Locker Effluent: the accumulated precipitation and seawater that is emptied from the compartment used to store the vessel's anchor chain.

(d) Clean Ballast: the seawater taken into, and discharged from, dedicated ballast tanks to maintain the stability of the vessel and to adjust the buoyancy of submarines.

(e) Compensated Fuel Ballast: the seawater taken into, and discharged from, ballast tanks designed to hold both ballast water and fuel to maintain the stability of the vessel.

(f) Controllable Pitch Propeller Hydraulic Fluid: the hydraulic fluid that discharges into the surrounding seawater from propeller seals as part of normal operation, and the hydraulic fluid released during routine maintenance of the propellers.

(g) Deck Runoff: the precipitation, washdowns, and seawater falling on the weather deck of a vessel and discharged overboard through deck openings.

(h) Dirty Ballast: the seawater taken into, and discharged from, empty fuel tanks to maintain the stability of the vessel.

(i) Distillation and Reverse Osmosis Brine: the concentrated seawater (brine) produced as a byproduct of the processes used to generate freshwater from seawater.

(j) Elevator Pit Effluent: the liquid that accumulates in, and is discharged from, the sumps of elevator wells on vessels.

(k) Firemain Systems: the seawater pumped through the firemain system for firemain testing, maintenance, and training, and to supply water for the operation of certain vessel systems.

(l) Gas Turbine Water Wash: the water released from washing gas turbine components.

(m) Graywater: galley, bath, and shower water, as well as wastewater from lavatory sinks, laundry, interior deck drains, water fountains, and shop sinks.

(n) Hull Coating Leachate: the constituents that leach, dissolve, ablate, or erode from the paint on the hull into the surrounding seawater.

(o) Motor Gasoline and Compensating Discharge: the seawater taken into, and discharged from, motor gasoline tanks to eliminate free space where vapors could accumulate.

(p) Non-Oily machinery wastewater: the combined wastewater from the operation of distilling plants, water chillers, valve packings, water piping, low- and high-pressure air compressors, and propulsion engine jacket coolers.

(q) Photographic Laboratory Drains: the laboratory wastewater resulting from processing of photographic film.

(r) Seawater Cooling Overboard Discharge: the discharge of seawater from a dedicated system that provides non-contact cooling water for other vessel systems.

(s) Seawater Piping Biofouling Prevention: the discharge of seawater containing additives used to prevent the growth and attachment of biofouling organisms in dedicated seawater cooling systems on selected vessels.

(t) Small Boat Engine Wet Exhaust: the seawater that is mixed and discharged with small boat propulsion engine exhaust to cool the exhaust and quiet the engine.

(u) Sonar Dome Discharge: the leaching of antifoulant materials into the surrounding seawater and the release of seawater or freshwater retained within the sonar dome.

(v) Submarine Bilgewater: the wastewater from a variety of sources that accumulates in the lowest part of the submarine (i.e., bilge).

(w) Surface Vessel Bilgewater/Oil-Water Separator Effluent: the wastewater from a variety of sources that accumulates in the lowest part of the vessel (the bilge), and the effluent produced when the wastewater is processed by an oil water separator.

(x) Underwater Ship Husbandry: the materials discharged during the inspection, maintenance, cleaning, and repair of hulls performed while the vessel is waterborne.

(y) Welldeck Discharges: the water that accumulates from seawater flooding of the docking well (welldeck) of a vessel used to transport, load, and unload amphibious vessels, and from maintenance and freshwater washings of the welldeck and equipment and vessels stored in the welldeck.

§ 1700.5 Discharges not requiring control.

For the following discharges incidental to the normal operation of Armed Forces vessels, the Administrator and the Secretary have determined that it is not reasonable or practicable to require use of a Marine Pollution Control Device to mitigate adverse impacts on the marine environment:

(a) Boiler Blowdown: the water and steam discharged when a steam boiler is blown down, or when a steam safety valve is tested.

(b) Catapult Wet Accumulator Discharge: the water discharged from a catapult wet accumulator, which stores a steam/water mixture for launching aircraft from an aircraft carrier.

(c) Cathodic Protection: the constituents released into surrounding water from sacrificial anode or impressed

current cathodic hull corrosion protection systems.

(d) Freshwater Lay-up: the potable water that is discharged from the seawater cooling system while the vessel is in port, and the cooling system is in lay-up mode (a standby mode where seawater in the system is replaced with potable water for corrosion protection).

(e) Mine Countermeasures Equipment Lubrication: the constituents released into the surrounding seawater by erosion or dissolution from lubricated mine countermeasures equipment when the equipment is deployed and towed.

(f) Portable Damage Control Drain Pump Discharge: the seawater pumped through the portable damage control drain pump and discharged overboard during testing, maintenance, and training activities.

(g) Portable Damage Control Drain Pump Wet Exhaust: the seawater mixed and discharged with portable damage control drain pump exhaust to cool the exhaust and quiet the engine.

(h) Refrigeration and Air Conditioning Condensate: the drainage of condensed moisture from air conditioning units, refrigerators, freezers, and refrigerated spaces.

(i) Rudder Bearing Lubrication: the oil or grease released by the erosion or dissolution from lubricated bearings that support the rudder and allow it to turn freely.

(j) Steam Condensate: the condensed steam discharged from a vessel in port, where the steam originates from port facilities.

(k) Stern Tube Seals and Underwater Bearing Lubrication: the seawater pumped through stern tube seals and underwater bearings to lubricate and cool them during normal operation.

(l) Submarine Acoustic Countermeasures Launcher Discharge: the seawater that is mixed with acoustic countermeasure device propulsion gas following a countermeasure launch that is then exchanged with surrounding seawater, or partially drained when the launch assembly is removed from the submarine for maintenance.

(m) Submarine Emergency Diesel Engine Wet Exhaust: the seawater that is mixed and discharged with submarine emergency diesel engine exhaust to cool the exhaust and quiet the engine.

(n) Submarine Outboard Equipment Grease and External Hydraulics: the grease released into the surrounding seawater by erosion or dissolution from submarine equipment exposed to seawater.

Subpart C—Effect on States

§ 1700.6 Effect on State and local statutes and regulations.

(a) After the effective date of a final rule determining that it is not reasonable and practicable to require use of a Marine Pollution Control Device regarding a particular discharge incidental to the normal operation of an Armed Forces vessel, States or political subdivisions of States may not adopt or enforce any State or local statute or regulation, including issuance or enforcement of permits under the National Pollutant Discharge Elimination System, controlling that discharge, except that States may establish a no-discharge zone by State prohibition (as provided in § 1700.9), or apply for a no-discharge zone by EPA prohibition (as provided in § 1700.10).

(b)(1) After the effective date of a final rule determining that it is reasonable and practicable to require use of a Marine Pollution Control Device regarding a particular discharge incidental to the normal operation of an Armed Forces vessel, States may apply for a no-discharge zone by EPA prohibition (as provided in § 1700.10) for that discharge.

(2) After the effective date of a final rule promulgated by the Secretary governing the design, construction, installation, and use of a Marine Pollution Control Device for a discharge listed in § 1700.4, States or political subdivisions of States may not adopt or enforce any State or local statute or regulation, including issuance or enforcement of permits under the National Pollutant Discharge Elimination System, controlling that discharge except that States may establish a no-discharge zone by State prohibition (as provided in § 1700.9), or apply for a no-discharge zone by EPA prohibition (as provided in § 1700.10).

(c) The Governor of any State may submit a petition requesting that the

Administrator and Secretary review a determination of whether a Marine Pollution Control Device is required for any discharge listed in §1700.4 or §1700.5, or review a Federal standard of performance for a Marine Pollution Control Device.

NO-DISCHARGE ZONES

§1700.7 No-discharge zones.

For this part, a no-discharge zone is a waterbody, or portion thereof, where one or more discharges incidental to the normal operation of Armed Forces vessels, whether treated or not, are prohibited. A no-discharge zone is established either by State prohibition using the procedures in §1700.9, or by EPA prohibition, upon application of a State, using the procedures in §1700.10.

§1700.8 Discharges for which no-discharge zones can be established.

(a) A no-discharge zone may be established by State prohibition for any discharge listed in §1700.4 or §1700.5 following the procedures in §1700.9. A no-discharge zone established by a State using these procedures may apply only to those discharges that have been preempted from other State or local regulation pursuant to §1700.6.

(b) A no-discharge zone may be established by EPA prohibition for any discharge listed in §1700.4 or §1700.5 following the procedures in §1700.10.

§1700.9 No-discharge zones by State prohibition.

(a) A State seeking to establish a no-discharge zone by State prohibition must send to the Administrator the following information:

(1) The discharge from §1700.4 or §1700.5 to be prohibited within the no-discharge zone.

(2) A detailed description of the waterbody, or portions thereof, to be included in the prohibition. The description must include a map, preferably a USGS topographic quadrant map, clearly marking the zone boundaries by latitude and longitude.

(3) A determination that the protection and enhancement of the waters described in paragraph (a)(2) of this section require greater environmental protection than provided by existing Federal standards.

(4) A complete description of the facilities reasonably available for collecting the discharge including:

(i) A map showing their location(s) and a written location description.

(ii) A demonstration that the facilities have the capacity and capability to provide safe and sanitary removal of the volume of discharge being prohibited in terms of both vessel berthing and discharge reception.

(iii) The schedule of operating hours of the facilities.

(iv) The draft requirements of the vessel(s) that will be required to use the facilities and the available water depth at the facilities.

(v) Information showing that handling of the discharge at the facilities is in conformance with Federal law.

(5) Information on whether vessels other than those of the Armed Forces are subject to the same type of prohibition. If the State is not applying the prohibition to all vessels in the area, the State must demonstrate the technical or environmental basis for applying the prohibition only to Armed Forces vessels. The following information must be included in the technical or environmental basis for treating Armed Forces vessels differently:

(i) An analysis showing the relative contributions of the discharge from Armed Forces and non-Armed Forces vessels.

(ii) A description of State efforts to control the discharge from non-Armed Forces vessels.

(b) The information provided under paragraph (a) of this section must be sufficient to enable EPA to make the two determinations listed below. Prior to making these determinations, EPA will consult with the Secretary on the adequacy of the facilities and the operational impact of any prohibition on Armed Forces vessels.

(1) Adequate facilities for the safe and sanitary removal of the discharge are reasonably available for the specified waters.

(2) The prohibition will not have the effect of discriminating against vessels of the Armed Forces by reason of the ownership or operation by the Federal

Government, or the military function, of the vessels.

(c) EPA will notify the State in writing of the result of the determinations under paragraph (b) of this section, and will provide a written explanation of any negative determinations. A no-discharge zone established by State prohibition will not go into effect until EPA determines that the conditions of paragraph (b) of this section have been met.

§ 1700.10 No-discharge zones by EPA prohibition.

(a) A State requesting EPA to establish a no-discharge zone must send to the Administrator an application containing the following information:

(1) The discharge from § 1700.4 or § 1700.5 to be prohibited within the no-discharge zone.

(2) A detailed description of the waterbody, or portions thereof, to be included in the prohibition. The description must include a map, preferably a USGS topographic quadrant map, clearly marking the zone boundaries by latitude and longitude.

(3) A technical analysis showing why protection and enhancement of the waters described in paragraph (a)(2) of this section require a prohibition of the discharge. The analysis must provide specific information on why the discharge adversely impacts the zone and how prohibition will protect the zone. In addition, the analysis should characterize any sensitive areas, such as aquatic sanctuaries, fish-spawning and nursery areas, pristine areas, areas not meeting water quality standards, drinking water intakes, and recreational areas.

(4) A complete description of the facilities reasonably available for collecting the discharge including:

(i) A map showing their location(s) and a written location description.

(ii) A demonstration that the facilities have the capacity and capability to provide safe and sanitary removal of the volume of discharge being prohibited in terms of both vessel berthing and discharge reception.

(iii) The schedule of operating hours of the facilities.

(iv) The draft requirements of the vessel(s) that will be required to use the facilities and the available water depth at the facilities.

(v) Information showing that handling of the discharge at the facilities is in conformance with Federal law.

(5) Information on whether vessels other than those of the Armed Forces are subject to the same type of prohibition. If the State is not applying a prohibition to other vessels in the area, the State must demonstrate the technical or environmental basis for applying a prohibition only to Armed Forces vessels. The following information must be included in the technical or environmental basis for treating Armed Forces vessels differently:

(i) An analysis showing the relative contributions of the discharge from Armed Forces and non-Armed Forces vessels.

(ii) A description of State efforts to control the discharge from non-Armed Forces vessels.

(b) The information provided under paragraph (a) of this section must be sufficient to enable EPA to make the three determinations listed below. Prior to making these determinations, EPA will consult with the Secretary on the adequacy of the facilities and the operational impact of the prohibition on Armed Forces vessels.

(1) The protection and enhancement of the specified waters require a prohibition of the discharge.

(2) Adequate facilities for the safe and sanitary removal of the discharge are reasonably available for the specified waters.

(3) The prohibition will not have the effect of discriminating against vessels of the Armed Forces by reason of the ownership or operation by the Federal Government, or the military function, or the vessels.

(c) If the three conditions in paragraph (b) of this section are met, EPA will by regulation establish the no-discharge zone. If the conditions in paragraphs (b) (1) and (3) of this section are met, but the condition in paragraph (b)(2) of this section is not met, EPA may establish the no-discharge zone if it determines that the significance of the waters and the potential impact of the discharge are of sufficient magnitude to warrant any resulting constraints on Armed Forces vessels.

(d) EPA will notify the State of its decision on the no-discharge zone application in writing. If EPA approves the no-discharge zone application, EPA will by regulation establish the no-discharge zone by modification to this part. A no-discharge zone established by EPA prohibition will not go into effect until the effective date of the regulation.

STATE PETITION FOR REVIEW

§ 1700.11 State petition for review of determinations or standards.

The Governor of any State may submit a petition requesting that the Administrator and Secretary review a determination of whether a Marine Pollution Control Device is required for any discharge listed in § 1700.4 or § 1700.5, or review a Federal standard of performance for a Marine Pollution Control Device. A State may submit a petition only where there is new, significant information not considered previously by the Administrator and Secretary.

§ 1700.12 Petition requirements.

A petition for review of a determination or standard must include:

(a) The discharge from § 1700.4 or § 1700.5 for which a change in determination is requested, or the performance standard from § 1700.14 for which review is requested.

(b) The scientific and technical information on which the petition is based.

(c) A detailed explanation of why the State believes that consideration of the new information should result in a change to the determination or the standard on a nationwide basis, and an explanation of how the new information is relevant to one or more of the following factors:

(1) The nature of the discharge.

(2) The environmental effects of the discharge.

(3) The practicability of using a Marine Pollution Control Device.

(4) The effect that installation or use of the Marine Pollution Control Device would have on the operation or operational capability of the vessel.

(5) Applicable United States law.

(6) Applicable international standards.

(7) The economic costs of the installation and use of the Marine Pollution Control Device.

§ 1700.13 Petition decisions.

The Administrator and the Secretary will evaluate the petition and grant or deny the petition no later than two years after the date of receipt of the petition. If the Administrator and Secretary grant the petition, they will undertake rulemaking to amend this part. If the Administrator and Secretary deny the petition, they will provide the State with a written explanation of why they denied it.

Subpart D—Marine Pollution Control Device (MPCD) Performance Standards

§ 1700.14 Marine Pollution Control Device (MPCD) Performance Standards. [Reserved]

FINDING AIDS

A list of CFR titles, subtitles, chapters, subchapters and parts and an alphabetical list of agencies publishing in the CFR are included in the CFR Index and Finding Aids volume to the Code of Federal Regulations which is published separately and revised annually.

Material Approved for Incorporation by Reference
Table of CFR Titles and Chapters
Alphabetical List of Agencies Appearing in the CFR
Toxic Substances CAS Number—Chemical Index
List of CFR Sections Affected

Material Approved for Incorporation by Reference

(Revised as of July 1, 2003)

The Director of the Federal Register has approved under 5 U.S.C. 552(a) and 1 CFR Part 51 the incorporation by reference of the following publications. This list contains only those incorporations by reference effective as of the revision date of this volume. Incorporations by reference found within a regulation are effective upon the effective date of that regulation. For more information on incorporation by reference, see the preliminary pages of this volume.

40 CFR (PARTS 790 TO END): TOXIC SUBSTANCES CONTROL ACT ENVIRONMENTAL PROTECTION AGENCY

	40 CFR
American Chemical Society Copies available from: EPA TSCA Document Processing Center, Rm. G–004 Northeast Mall, 401 M Street, SW., Washington, DC 20460	
Environmental Science and Technology, Vol. 14, No. 11, Prediction of the Volatilization Rates of High-Volatility Chemicals from Natural Water Bodies, Smith, et al..	799.1285(e)(2)(i)
American Society for Testing and Materials 100 Barr Harbor Drive, West Conshohocken, PA 19428-2959	
ASTM D 86–01, Standard Test Method for Distillation of Petroleum Products at Atmospheric Pressure, 2001.	1065.210; 1065.1010;
ASTM D 323–99a, Standard Test Method for Vapor Pressure of Petroleum Products (Reid Method).	1065.210; 1065.1010
ASTM D 471–98, Standard Test Method for Rubber Property—Effect of Liquids, 1998.	1051.501; 1051.810
ASTM D 814–95 (Reapproved 2000), Standard Test Method for Rubber Property—Vapor Transmission of Volatile Liquids, 2000.	1051.810
ASTM D 1193–77 (Reapproved 1983) Standard Specification for Reagent Water.	796.3500(b)(1)(ii)
ASTM D 1266–98, Standard Test for Sulfur in Petroleum Products (Lamp Method), 1998.	1065.210; 1065.1010
ASTM D 1267–02, Standard Test Method for Gage Vapor Pressure of Luquified Petroleum (LP) Gases (LP-Gas Method), 2002.	1065.220; 1065.1010
ASTM D 1319–02, Standard Test Method for Hydrocarbon Types in Liquid Petroleum Products by Fluorescent Indicator Adsorption, 2002.	1065.210; 1065.1010
ASTM D 1836–83 Standard Specification for Commercial Hexanes	795.232(c)(2)(i); 799.2155(a)(1)
ASTM D 1837-02, Standard Test Method for Volatility of Liquified Petroleum (LP)Gases, 2002.	1065.220; 1065.1010
ASTM D 1838–91 (Reapproved 2001), Standard Test Method for Copper Strip Corrosion by Liquefied Petroleum (LP) Gases, 2001.	1065.220; 1065.1010
ASTM D 1945–96 (Reapproved 2001), Standard Test Method for Analysis of Natural Gas by Gas Chromatography, 2001.	1065.215; 1065.1010
ASTM D 2158–02, Standard Test Method for Residues in Liquified Petroleum (LP) Gases, 2002.	1065.220; 1065.1010

40 CFR (PARTS 790 TO END): TOXIC SUBSTANCES CONTROL ACT—Continued
ENVIRONMENTAL PROTECTION AGENCY—Continued

	40 CFR
ASTM D 2163–91 (Reapproved 1996), Standard Test Method for Analysis of Liquified Petroleum (LP) Gases and Propene Concentrates by Gas Chromatography, 1996.	1065.220; 1065.1010
ASTM D 2598–02, Standard Practice for Calculation of Certain Physical Properties of Liquified Petroleum (LP) Gases from Compositional Analysis, 2002.	1065.220; 1065.1010
ASTM D 2713–91 (Reapproved 2001), Standard Test Method for Dryness of Propane (Valve Freeze Method), 2001.	1065.220; 1065.1010
ASTM D 2784–98, Standard Test Method for Sulfur in Liquified Petroleum Gases (Oxy-Hydrogen Burner or Lamp), 1998.	1065.220; 1065.1010
ASTM D 2879–86 Standard Test Method for Vapor Pressure—Temperature Relationship and Initial Decomposition Temperature of Liquids by Isotoniscope.	796.1950(b)(2)(i)
ASTM D 3231–02, Standard Test Method for Phosphorous in Gasoline, 2002.	1065.210; 1065.1010
ASTM D 3237–97, Standard Test Method for Lead in Gasoline by Atomic Absorption Spectroscopy, 1997.	1065.210; 1065.1010
ASTM E 29–02, Standard Practice for Using Significant Digits in Test Data to Determine Conformance with Specifications, 2002.	1048.801; 1048.810; 1051.801; 1051.810
EPA TSCA Document Processing Center	
Rm. G–004 Northeast Mall, 401 M Street, SW., Washington, DC 20460	
ASTM STP 854, ''Aquatic Safety Assessment of Chemicals Sorbed to Sediments'', by W.J. Adams et al, as published in Aquatic Toxicology and Hazard Assessment: Seventh Symposium..	799.500(c)(4)(i)(B); 799.4000(d)(3)(i); 799.4360(d)(7)(i)(B)
ASTM STP 854, ''Phoxoccephalid Amphipod Bioassay for Marine Sediment Toxicity'', by R.C. Swartz, et al, as published in Aquatic Toxicology and Hazard Assessment: Seventh Symposium..	799.500(c)(4)(i)(A)
International Organization for Standardization	
Case Postale 56, CH–1211 Geneve 20, Switzerland	
ISO 8178-1, Reciprocating Internal Combustion Engines—Exhaust Emission Measurement—Part 1: Test-bed Measurement of Gaseous and Particulate Exhaust Emissions, August 15, 1996.	1065.130; 1065.135; 1065.140; 1065.155; 1065.1010
ISO 9141–2: Road Vehicles—Diagnostic Systems—Part 2: CARB Requirements for Interchange of Digital Information, February 1, 1994.	1048.110; 1048.810; 1806-04; 1806-05
ISO 14230–4: Road Vehicles—Diagnostic Systems—Keyword Protocol 2000—Part 4: Requirements for Emission-related Systems, June 1, 2000.	1048.110; 1048.810; 1806-04; 1806-05
Organization for Economic Co-operation and Development	
OECD Publication and Information Center, Room Number 1207, 1750 Pennsylvania Avenue, NW. Washington, DC	
''Teratogenicity'', Number 414, adopted May 12, 1981	799.1650(c)
Society of Automotive Engineers	
400 Commonwealth Dr., Warrendale, PA 15096–0001; Telephone: (412) 776–4841	
SAE J30, Fuel and Oil Hoses, June 1998	1051.245; 1051.501; 1051.810
SAE J1930: Electrical/Electronic Systems Diagnostic Terms, Definitions, Abbreviations, and Acronyms, May 1998.	1048.135; 1048.810; 1051.135; 1051.810; 1808-01; 1808-07

40 CFR (PARTS 790 TO END): TOXIC SUBSTANCES CONTROL ACT—Continued
ENVIRONMENTAL PROTECTION AGENCY—Continued

	40 CFR
SAE J2260: Nonmetallic Fuel System Tubing with One or More Layers, November 1996.	1048.105; 1048.810; 1051.245; 1051.810
Society for Industrial Microbiology POB 12538, Arlington, VA 22209–8534	
Developments in Industrial Microbiology, Vol. 18, Chapter 11, 1977; An Artificial Microbiol Ecosystem for Determining Effects and Rate of Toxicants in a Salt-March Environment, A.W. Bouquin et al., copies available from: EPA TSCA Document Processing Center, Rm. G–004 Northeast Mall, 401 M Street, SW., Washington, DC 20460.	799.4000(c)(1)(i); 799.1285 (e)(1)(i); 799.500 (d)(2)(i)(B)

Table of CFR Titles and Chapters

(Revised as of July 1, 2003)

Title 1—General Provisions

I Administrative Committee of the Federal Register (Parts 1—49)
II Office of the Federal Register (Parts 50—299)
IV Miscellaneous Agencies (Parts 400—500)

Title 2 [Reserved]

Title 3—The President

I Executive Office of the President (Parts 100—199)

Title 4—Accounts

I General Accounting Office (Parts 1—99)

Title 5—Administrative Personnel

I Office of Personnel Management (Parts 1—1199)
II Merit Systems Protection Board (Parts 1200—1299)
III Office of Management and Budget (Parts 1300—1399)
V The International Organizations Employees Loyalty Board (Parts 1500—1599)
VI Federal Retirement Thrift Investment Board (Parts 1600—1699)
VIII Office of Special Counsel (Parts 1800—1899)
IX Appalachian Regional Commission (Parts 1900—1999)
XI Armed Forces Retirement Home (Part 2100)
XIV Federal Labor Relations Authority, General Counsel of the Federal Labor Relations Authority and Federal Service Impasses Panel (Parts 2400—2499)
XV Office of Administration, Executive Office of the President (Parts 2500—2599)
XVI Office of Government Ethics (Parts 2600—2699)
XXI Department of the Treasury (Parts 3100—3199)
XXII Federal Deposit Insurance Corporation (Part 3201)
XXIII Department of Energy (Part 3301)
XXIV Federal Energy Regulatory Commission (Part 3401)
XXV Department of the Interior (Part 3501)
XXVI Department of Defense (Part 3601)

Title 5—Administrative Personnel—Continued

Chap.	
XXVIII	Department of Justice (Part 3801)
XXIX	Federal Communications Commission (Parts 3900—3999)
XXX	Farm Credit System Insurance Corporation (Parts 4000—4099)
XXXI	Farm Credit Administration (Parts 4100—4199)
XXXIII	Overseas Private Investment Corporation (Part 4301)
XXXV	Office of Personnel Management (Part 4501)
XL	Interstate Commerce Commission (Part 5001)
XLI	Commodity Futures Trading Commission (Part 5101)
XLII	Department of Labor (Part 5201)
XLIII	National Science Foundation (Part 5301)
XLV	Department of Health and Human Services (Part 5501)
XLVI	Postal Rate Commission (Part 5601)
XLVII	Federal Trade Commission (Part 5701)
XLVIII	Nuclear Regulatory Commission (Part 5801)
L	Department of Transportation (Part 6001)
LII	Export-Import Bank of the United States (Part 6201)
LIII	Department of Education (Parts 6300—6399)
LIV	Environmental Protection Agency (Part 6401)
LVII	General Services Administration (Part 6701)
LVIII	Board of Governors of the Federal Reserve System (Part 6801)
LIX	National Aeronautics and Space Administration (Part 6901)
LX	United States Postal Service (Part 7001)
LXI	National Labor Relations Board (Part 7101)
LXII	Equal Employment Opportunity Commission (Part 7201)
LXIII	Inter-American Foundation (Part 7301)
LXV	Department of Housing and Urban Development (Part 7501)
LXVI	National Archives and Records Administration (Part 7601)
LXVII	Institute of Museum and Library Services (Part 7701)
LXIX	Tennessee Valley Authority (Part 7901)
LXXI	Consumer Product Safety Commission (Part 8101)
LXXIII	Department of Agriculture (Part 8301)
LXXIV	Federal Mine Safety and Health Review Commission (Part 8401)
LXXVI	Federal Retirement Thrift Investment Board (Part 8601)
LXXVII	Office of Management and Budget (Part 8701)

Title 6—Homeland Security

I Department of Homeland Security, Office of the Secretary (Parts 0—99)

Title 7—Agriculture

SUBTITLE A—OFFICE OF THE SECRETARY OF AGRICULTURE (PARTS 0—26)

SUBTITLE B—REGULATIONS OF THE DEPARTMENT OF AGRICULTURE

Title 7—Agriculture—Continued

Chap.	
I	Agricultural Marketing Service (Standards, Inspections, Marketing Practices), Department of Agriculture (Parts 27—209)
II	Food and Nutrition Service, Department of Agriculture (Parts 210—299)
III	Animal and Plant Health Inspection Service, Department of Agriculture (Parts 300—399)
IV	Federal Crop Insurance Corporation, Department of Agriculture (Parts 400—499)
V	Agricultural Research Service, Department of Agriculture (Parts 500—599)
VI	Natural Resources Conservation Service, Department of Agriculture (Parts 600—699)
VII	Farm Service Agency, Department of Agriculture (Parts 700—799)
VIII	Grain Inspection, Packers and Stockyards Administration (Federal Grain Inspection Service), Department of Agriculture (Parts 800—899)
IX	Agricultural Marketing Service (Marketing Agreements and Orders; Fruits, Vegetables, Nuts), Department of Agriculture (Parts 900—999)
X	Agricultural Marketing Service (Marketing Agreements and Orders; Milk), Department of Agriculture (Parts 1000—1199)
XI	Agricultural Marketing Service (Marketing Agreements and Orders; Miscellaneous Commodities), Department of Agriculture (Parts 1200—1299)
XIV	Commodity Credit Corporation, Department of Agriculture (Parts 1400—1499)
XV	Foreign Agricultural Service, Department of Agriculture (Parts 1500—1599)
XVI	Rural Telephone Bank, Department of Agriculture (Parts 1600—1699)
XVII	Rural Utilities Service, Department of Agriculture (Parts 1700—1799)
XVIII	Rural Housing Service, Rural Business-Cooperative Service, Rural Utilities Service, and Farm Service Agency, Department of Agriculture (Parts 1800—2099)
XX	Local Television Loan Guarantee Board (Parts 2200—2299)
XXVI	Office of Inspector General, Department of Agriculture (Parts 2600—2699)
XXVII	Office of Information Resources Management, Department of Agriculture (Parts 2700—2799)
XXVIII	Office of Operations, Department of Agriculture (Parts 2800—2899)
XXIX	Office of Energy, Department of Agriculture (Parts 2900—2999)
XXX	Office of the Chief Financial Officer, Department of Agriculture (Parts 3000—3099)
XXXI	Office of Environmental Quality, Department of Agriculture (Parts 3100—3199)
XXXII	Office of Procurement and Property Management, Department of Agriculture (Parts 3200—3299)

Title 7—Agriculture—Continued

Chap.	
XXXIII	Office of Transportation, Department of Agriculture (Parts 3300—3399)
XXXIV	Cooperative State Research, Education, and Extension Service, Department of Agriculture (Parts 3400—3499)
XXXV	Rural Housing Service, Department of Agriculture (Parts 3500—3599)
XXXVI	National Agricultural Statistics Service, Department of Agriculture (Parts 3600—3699)
XXXVII	Economic Research Service, Department of Agriculture (Parts 3700—3799)
XXXVIII	World Agricultural Outlook Board, Department of Agriculture (Parts 3800—3899)
XLI	[Reserved]
XLII	Rural Business-Cooperative Service and Rural Utilities Service, Department of Agriculture (Parts 4200—4299)

Title 8—Aliens and Nationality

I	Department of Homeland Security (Immigration and Naturalization) (Parts 1—599)
V	Executive Office for Immigration Review, Department of Justice (Parts 1000—1400)

Title 9—Animals and Animal Products

I	Animal and Plant Health Inspection Service, Department of Agriculture (Parts 1—199)
II	Grain Inspection, Packers and Stockyards Administration (Packers and Stockyards Programs), Department of Agriculture (Parts 200—299)
III	Food Safety and Inspection Service, Department of Agriculture (Parts 300—599)

Title 10—Energy

I	Nuclear Regulatory Commission (Parts 0—199)
II	Department of Energy (Parts 200—699)
III	Department of Energy (Parts 700—999)
X	Department of Energy (General Provisions) (Parts 1000—1099)
XVII	Defense Nuclear Facilities Safety Board (Parts 1700—1799)
XVIII	Northeast Interstate Low-Level Radioactive Waste Commission (Part 1800)

Title 11—Federal Elections

I	Federal Election Commission (Parts 1—9099)

Title 12—Banks and Banking

Chap.

I Comptroller of the Currency, Department of the Treasury (Parts 1—199)

II Federal Reserve System (Parts 200—299)

III Federal Deposit Insurance Corporation (Parts 300—399)

IV Export-Import Bank of the United States (Parts 400—499)

V Office of Thrift Supervision, Department of the Treasury (Parts 500—599)

VI Farm Credit Administration (Parts 600—699)

VII National Credit Union Administration (Parts 700—799)

VIII Federal Financing Bank (Parts 800—899)

IX Federal Housing Finance Board (Parts 900—999)

XI Federal Financial Institutions Examination Council (Parts 1100—1199)

XIV Farm Credit System Insurance Corporation (Parts 1400—1499)

XV Department of the Treasury (Parts 1500—1599)

XVII Office of Federal Housing Enterprise Oversight, Department of Housing and Urban Development (Parts 1700—1799)

XVIII Community Development Financial Institutions Fund, Department of the Treasury (Parts 1800—1899)

Title 13—Business Credit and Assistance

I Small Business Administration (Parts 1—199)

III Economic Development Administration, Department of Commerce (Parts 300—399)

IV Emergency Steel Guarantee Loan Board (Parts 400—499)

V Emergency Oil and Gas Guaranteed Loan Board (Parts 500—599)

Title 14—Aeronautics and Space

I Federal Aviation Administration, Department of Transportation (Parts 1—199)

II Office of the Secretary, Department of Transportation (Aviation Proceedings) (Parts 200—399)

III Commercial Space Transportation, Federal Aviation Administration, Department of Transportation (Parts 400—499)

V National Aeronautics and Space Administration (Parts 1200—1299)

VI Air Transportation System Stabilization (Parts 1300—1399)

Title 15—Commerce and Foreign Trade

SUBTITLE A—OFFICE OF THE SECRETARY OF COMMERCE (PARTS 0—29)

SUBTITLE B—REGULATIONS RELATING TO COMMERCE AND FOREIGN TRADE

I Bureau of the Census, Department of Commerce (Parts 30—199)

Title 15—Commerce and Foreign Trade—Continued

Chap.

II National Institute of Standards and Technology, Department of Commerce (Parts 200—299)

III International Trade Administration, Department of Commerce (Parts 300—399)

IV Foreign-Trade Zones Board, Department of Commerce (Parts 400—499)

VII Bureau of Industry and Security, Department of Commerce (Parts 700—799)

VIII Bureau of Economic Analysis, Department of Commerce (Parts 800—899)

IX National Oceanic and Atmospheric Administration, Department of Commerce (Parts 900—999)

XI Technology Administration, Department of Commerce (Parts 1100—1199)

XIII East-West Foreign Trade Board (Parts 1300—1399)

XIV Minority Business Development Agency (Parts 1400—1499)

SUBTITLE C—REGULATIONS RELATING TO FOREIGN TRADE AGREEMENTS

XX Office of the United States Trade Representative (Parts 2000—2099)

SUBTITLE D—REGULATIONS RELATING TO TELECOMMUNICATIONS AND INFORMATION

XXIII National Telecommunications and Information Administration, Department of Commerce (Parts 2300—2399)

Title 16—Commercial Practices

I Federal Trade Commission (Parts 0—999)

II Consumer Product Safety Commission (Parts 1000—1799)

Title 17—Commodity and Securities Exchanges

I Commodity Futures Trading Commission (Parts 1—199)

II Securities and Exchange Commission (Parts 200—399)

IV Department of the Treasury (Parts 400—499)

Title 18—Conservation of Power and Water Resources

I Federal Energy Regulatory Commission, Department of Energy (Parts 1—399)

III Delaware River Basin Commission (Parts 400—499)

VI Water Resources Council (Parts 700—799)

VIII Susquehanna River Basin Commission (Parts 800—899)

XIII Tennessee Valley Authority (Parts 1300—1399)

Title 19—Customs Duties

I United States Customs Service, Department of the Treasury (Parts 1—199)

Title 19—Customs Duties—Continued

Chap.

II United States International Trade Commission (Parts 200—299)

III International Trade Administration, Department of Commerce (Parts 300—399)

Title 20—Employees' Benefits

I Office of Workers' Compensation Programs, Department of Labor (Parts 1—199)

II Railroad Retirement Board (Parts 200—399)

III Social Security Administration (Parts 400—499)

IV Employees' Compensation Appeals Board, Department of Labor (Parts 500—599)

V Employment and Training Administration, Department of Labor (Parts 600—699)

VI Employment Standards Administration, Department of Labor (Parts 700—799)

VII Benefits Review Board, Department of Labor (Parts 800—899)

VIII Joint Board for the Enrollment of Actuaries (Parts 900—999)

IX Office of the Assistant Secretary for Veterans' Employment and Training, Department of Labor (Parts 1000—1099)

Title 21—Food and Drugs

I Food and Drug Administration, Department of Health and Human Services (Parts 1—1299)

II Drug Enforcement Administration, Department of Justice (Parts 1300—1399)

III Office of National Drug Control Policy (Parts 1400—1499)

Title 22—Foreign Relations

I Department of State (Parts 1—199)

II Agency for International Development (Parts 200—299)

III Peace Corps (Parts 300—399)

IV International Joint Commission, United States and Canada (Parts 400—499)

V Broadcasting Board of Governors (Parts 500—599)

VII Overseas Private Investment Corporation (Parts 700—799)

IX Foreign Service Grievance Board (Parts 900—999)

X Inter-American Foundation (Parts 1000—1099)

XI International Boundary and Water Commission, United States and Mexico, United States Section (Parts 1100—1199)

XII United States International Development Cooperation Agency (Parts 1200—1299)

XIV Foreign Service Labor Relations Board; Federal Labor Relations Authority; General Counsel of the Federal Labor Relations Authority; and the Foreign Service Impasse Disputes Panel (Parts 1400—1499)

Title 22—Foreign Relations—Continued

Chap.

XV African Development Foundation (Parts 1500—1599)

XVI Japan-United States Friendship Commission (Parts 1600—1699)

XVII United States Institute of Peace (Parts 1700—1799)

Title 23—Highways

I Federal Highway Administration, Department of Transportation (Parts 1—999)

II National Highway Traffic Safety Administration and Federal Highway Administration, Department of Transportation (Parts 1200—1299)

III National Highway Traffic Safety Administration, Department of Transportation (Parts 1300—1399)

Title 24—Housing and Urban Development

SUBTITLE A—OFFICE OF THE SECRETARY, DEPARTMENT OF HOUSING AND URBAN DEVELOPMENT (PARTS 0—99)

SUBTITLE B—REGULATIONS RELATING TO HOUSING AND URBAN DEVELOPMENT

I Office of Assistant Secretary for Equal Opportunity, Department of Housing and Urban Development (Parts 100—199)

II Office of Assistant Secretary for Housing-Federal Housing Commissioner, Department of Housing and Urban Development (Parts 200—299)

III Government National Mortgage Association, Department of Housing and Urban Development (Parts 300—399)

IV Office of Housing and Office of Multifamily Housing Assistance Restructuring, Department of Housing and Urban Development (Parts 400—499)

V Office of Assistant Secretary for Community Planning and Development, Department of Housing and Urban Development (Parts 500—599)

VI Office of Assistant Secretary for Community Planning and Development, Department of Housing and Urban Development (Parts 600—699) [Reserved]

VII Office of the Secretary, Department of Housing and Urban Development (Housing Assistance Programs and Public and Indian Housing Programs) (Parts 700—799)

VIII Office of the Assistant Secretary for Housing—Federal Housing Commissioner, Department of Housing and Urban Development (Section 8 Housing Assistance Programs, Section 202 Direct Loan Program, Section 202 Supportive Housing for the Elderly Program and Section 811 Supportive Housing for Persons With Disabilities Program) (Parts 800—899)

IX Office of Assistant Secretary for Public and Indian Housing, Department of Housing and Urban Development (Parts 900—1699)

X Office of Assistant Secretary for Housing—Federal Housing Commissioner, Department of Housing and Urban Development (Interstate Land Sales Registration Program) (Parts 1700—1799)

Title 24—Housing and Urban Development—Continued

Chap.

XII Office of Inspector General, Department of Housing and Urban Development (Parts 2000—2099)

XX Office of Assistant Secretary for Housing—Federal Housing Commissioner, Department of Housing and Urban Development (Parts 3200—3899)

XXV Neighborhood Reinvestment Corporation (Parts 4100—4199)

Title 25—Indians

I Bureau of Indian Affairs, Department of the Interior (Parts 1—299)

II Indian Arts and Crafts Board, Department of the Interior (Parts 300—399)

III National Indian Gaming Commission, Department of the Interior (Parts 500—599)

IV Office of Navajo and Hopi Indian Relocation (Parts 700—799)

V Bureau of Indian Affairs, Department of the Interior, and Indian Health Service, Department of Health and Human Services (Part 900)

VI Office of the Assistant Secretary-Indian Affairs, Department of the Interior (Parts 1000—1199)

VII Office of the Special Trustee for American Indians, Department of the Interior (Part 1200)

Title 26—Internal Revenue

I Internal Revenue Service, Department of the Treasury (Parts 1—899)

Title 27—Alcohol, Tobacco Products and Firearms

I Alcohol and Tobacco Tax and Trade Bureau, Department of the Treasury (Parts 1—299)

II Bureau of Alcohol, Tobacco, Firearms, and Explosives, Department of Justice (Parts 400—699)

Title 28—Judicial Administration

I Department of Justice (Parts 0—299)

III Federal Prison Industries, Inc., Department of Justice (Parts 300—399)

V Bureau of Prisons, Department of Justice (Parts 500—599)

VI Offices of Independent Counsel, Department of Justice (Parts 600—699)

VII Office of Independent Counsel (Parts 700—799)

VIII Court Services and Offender Supervision Agency for the District of Columbia (Parts 800—899)

IX National Crime Prevention and Privacy Compact Council (Parts 900—999)

Title 28—Judicial Administration—Continued

Chap.

XI Department of Justice and Department of State (Parts 1100—1199)

Title 29—Labor

SUBTITLE A—OFFICE OF THE SECRETARY OF LABOR (PARTS 0—99)

SUBTITLE B—REGULATIONS RELATING TO LABOR

I National Labor Relations Board (Parts 100—199)

II Office of Labor-Management Standards, Department of Labor (Parts 200—299)

III National Railroad Adjustment Board (Parts 300—399)

IV Office of Labor-Management Standards, Department of Labor (Parts 400—499)

V Wage and Hour Division, Department of Labor (Parts 500—899)

IX Construction Industry Collective Bargaining Commission (Parts 900—999)

X National Mediation Board (Parts 1200—1299)

XII Federal Mediation and Conciliation Service (Parts 1400—1499)

XIV Equal Employment Opportunity Commission (Parts 1600—1699)

XVII Occupational Safety and Health Administration, Department of Labor (Parts 1900—1999)

XX Occupational Safety and Health Review Commission (Parts 2200—2499)

XXV Employee Benefits Security Administration, Department of Labor (Parts 2500—2599)

XXVII Federal Mine Safety and Health Review Commission (Parts 2700—2799)

XL Pension Benefit Guaranty Corporation (Parts 4000—4999)

Title 30—Mineral Resources

I Mine Safety and Health Administration, Department of Labor (Parts 1—199)

II Minerals Management Service, Department of the Interior (Parts 200—299)

III Board of Surface Mining and Reclamation Appeals, Department of the Interior (Parts 300—399)

IV Geological Survey, Department of the Interior (Parts 400—499)

VII Office of Surface Mining Reclamation and Enforcement, Department of the Interior (Parts 700—999)

Title 31—Money and Finance: Treasury

SUBTITLE A—OFFICE OF THE SECRETARY OF THE TREASURY (PARTS 0—50)

SUBTITLE B—REGULATIONS RELATING TO MONEY AND FINANCE

I Monetary Offices, Department of the Treasury (Parts 51—199)

II Fiscal Service, Department of the Treasury (Parts 200—399)

Title 31—Money and Finance: Treasury—Continued

Chap.

IV Secret Service, Department of the Treasury (Parts 400—499)

V Office of Foreign Assets Control, Department of the Treasury (Parts 500—599)

VI Bureau of Engraving and Printing, Department of the Treasury (Parts 600—699)

VII Federal Law Enforcement Training Center, Department of the Treasury (Parts 700—799)

VIII Office of International Investment, Department of the Treasury (Parts 800—899)

IX Federal Claims Collection Standards (Department of the Treasury—Department of Justice) (Parts 900—999)

Title 32—National Defense

SUBTITLE A—DEPARTMENT OF DEFENSE

I Office of the Secretary of Defense (Parts 1—399)

V Department of the Army (Parts 400—699)

VI Department of the Navy (Parts 700—799)

VII Department of the Air Force (Parts 800—1099)

SUBTITLE B—OTHER REGULATIONS RELATING TO NATIONAL DEFENSE

XII Defense Logistics Agency (Parts 1200—1299)

XVI Selective Service System (Parts 1600—1699)

XVIII National Counterintelligence Center (Parts 1800—1899)

XIX Central Intelligence Agency (Parts 1900—1999)

XX Information Security Oversight Office, National Archives and Records Administration (Parts 2000—2099)

XXI National Security Council (Parts 2100—2199)

XXIV Office of Science and Technology Policy (Parts 2400—2499)

XXVII Office for Micronesian Status Negotiations (Parts 2700—2799)

XXVIII Office of the Vice President of the United States (Parts 2800—2899)

Title 33—Navigation and Navigable Waters

I Coast Guard, Department of Transportation (Parts 1—199)

II Corps of Engineers, Department of the Army (Parts 200—399)

IV Saint Lawrence Seaway Development Corporation, Department of Transportation (Parts 400—499)

Title 34—Education

SUBTITLE A—OFFICE OF THE SECRETARY, DEPARTMENT OF EDUCATION (PARTS 1—99)

SUBTITLE B—REGULATIONS OF THE OFFICES OF THE DEPARTMENT OF EDUCATION

I Office for Civil Rights, Department of Education (Parts 100—199)

Title 34—Education—Continued

Chap.

II Office of Elementary and Secondary Education, Department of Education (Parts 200—299)

III Office of Special Education and Rehabilitative Services, Department of Education (Parts 300—399)

IV Office of Vocational and Adult Education, Department of Education (Parts 400—499)

V Office of Bilingual Education and Minority Languages Affairs, Department of Education (Parts 500—599)

VI Office of Postsecondary Education, Department of Education (Parts 600—699)

XI National Institute for Literacy (Parts 1100—1199)

SUBTITLE C—REGULATIONS RELATING TO EDUCATION

XII National Council on Disability (Parts 1200—1299)

Title 35—Panama Canal

I Panama Canal Regulations (Parts 1—299)

Title 36—Parks, Forests, and Public Property

I National Park Service, Department of the Interior (Parts 1—199)

II Forest Service, Department of Agriculture (Parts 200—299)

III Corps of Engineers, Department of the Army (Parts 300—399)

IV American Battle Monuments Commission (Parts 400—499)

V Smithsonian Institution (Parts 500—599)

VII Library of Congress (Parts 700—799)

VIII Advisory Council on Historic Preservation (Parts 800—899)

IX Pennsylvania Avenue Development Corporation (Parts 900—999)

X Presidio Trust (Parts 1000—1099)

XI Architectural and Transportation Barriers Compliance Board (Parts 1100—1199)

XII National Archives and Records Administration (Parts 1200—1299)

XV Oklahoma City National Memorial Trust (Part 1501)

XVI Morris K. Udall Scholarship and Excellence in National Environmental Policy Foundation (Parts 1600—1699)

Title 37—Patents, Trademarks, and Copyrights

I United States Patent and Trademark Office, Department of Commerce (Parts 1—199)

II Copyright Office, Library of Congress (Parts 200—299)

IV Assistant Secretary for Technology Policy, Department of Commerce (Parts 400—499)

V Under Secretary for Technology, Department of Commerce (Parts 500—599)

Title 38—Pensions, Bonuses, and Veterans' Relief

Chap.

I Department of Veterans Affairs (Parts 0—99)

Title 39—Postal Service

I United States Postal Service (Parts 1—999)

III Postal Rate Commission (Parts 3000—3099)

Title 40—Protection of Environment

I Environmental Protection Agency (Parts 1—799)

IV Environmental Protection Agency and Department of Justice (Parts 1400—1499)

V Council on Environmental Quality (Parts 1500—1599)

VI Chemical Safety and Hazard Investigation Board (Parts 1600—1699)

VII Environmental Protection Agency and Department of Defense; Uniform National Discharge Standards for Vessels of the Armed Forces (Parts 1700—1799)

Title 41—Public Contracts and Property Management

SUBTITLE B—OTHER PROVISIONS RELATING TO PUBLIC CONTRACTS

50 Public Contracts, Department of Labor (Parts 50–1—50–999)

51 Committee for Purchase From People Who Are Blind or Severely Disabled (Parts 51–1—51–99)

60 Office of Federal Contract Compliance Programs, Equal Employment Opportunity, Department of Labor (Parts 60–1—60–999)

61 Office of the Assistant Secretary for Veterans' Employment and Training Service, Department of Labor (Parts 61–1—61–999)

SUBTITLE C—FEDERAL PROPERTY MANAGEMENT REGULATIONS SYSTEM

101 Federal Property Management Regulations (Parts 101–1—101–99)

102 Federal Management Regulation (Parts 102–1—102–299)

105 General Services Administration (Parts 105–1—105–999)

109 Department of Energy Property Management Regulations (Parts 109–1—109–99)

114 Department of the Interior (Parts 114–1—114–99)

115 Environmental Protection Agency (Parts 115–1—115–99)

128 Department of Justice (Parts 128–1—128–99)

SUBTITLE D—OTHER PROVISIONS RELATING TO PROPERTY MANAGEMENT [RESERVED]

SUBTITLE E—FEDERAL INFORMATION RESOURCES MANAGEMENT REGULATIONS SYSTEM

201 Federal Information Resources Management Regulation (Parts 201–1—201–99) [Reserved]

SUBTITLE F—FEDERAL TRAVEL REGULATION SYSTEM

300 General (Parts 300–1—300–99)

301 Temporary Duty (TDY) Travel Allowances (Parts 301–1—301–99)

Chap.

302 Relocation Allowances (Parts 302–1—302–99)

303 Payment of Expenses Connected with the Death of Certain Employees (Part 303–70)

304 Payment of Travel Expenses from a Non-Federal Source (Parts 304–1—304–99)

Title 42—Public Health

I Public Health Service, Department of Health and Human Services (Parts 1—199)

IV Centers for Medicare & Medicaid Services, Department of Health and Human Services (Parts 400—499)

V Office of Inspector General-Health Care, Department of Health and Human Services (Parts 1000—1999)

Title 43—Public Lands: Interior

SUBTITLE A—OFFICE OF THE SECRETARY OF THE INTERIOR (PARTS 1—199)

SUBTITLE B—REGULATIONS RELATING TO PUBLIC LANDS

I Bureau of Reclamation, Department of the Interior (Parts 200—499)

II Bureau of Land Management, Department of the Interior (Parts 1000—9999)

III Utah Reclamation Mitigation and Conservation Commission (Parts 10000—10005)

Title 44—Emergency Management and Assistance

I Federal Emergency Management Agency, Department of Homeland Security (Parts 0—399)

IV Department of Commerce and Department of Transportation (Parts 400—499)

Title 45—Public Welfare

SUBTITLE A—DEPARTMENT OF HEALTH AND HUMAN SERVICES (PARTS 1—199)

SUBTITLE B—REGULATIONS RELATING TO PUBLIC WELFARE

II Office of Family Assistance (Assistance Programs), Administration for Children and Families, Department of Health and Human Services (Parts 200—299)

III Office of Child Support Enforcement (Child Support Enforcement Program), Administration for Children and Families, Department of Health and Human Services (Parts 300—399)

IV Office of Refugee Resettlement, Administration for Children and Families Department of Health and Human Services (Parts 400—499)

V Foreign Claims Settlement Commission of the United States, Department of Justice (Parts 500—599)

Title 45—Public Welfare—Continued

Chap.

VI National Science Foundation (Parts 600—699)

VII Commission on Civil Rights (Parts 700—799)

VIII Office of Personnel Management (Parts 800—899)

X Office of Community Services, Administration for Children and Families, Department of Health and Human Services (Parts 1000—1099)

XI National Foundation on the Arts and the Humanities (Parts 1100—1199)

XII Corporation for National and Community Service (Parts 1200—1299)

XIII Office of Human Development Services, Department of Health and Human Services (Parts 1300—1399)

XVI Legal Services Corporation (Parts 1600—1699)

XVII National Commission on Libraries and Information Science (Parts 1700—1799)

XVIII Harry S. Truman Scholarship Foundation (Parts 1800—1899)

XXI Commission on Fine Arts (Parts 2100—2199)

XXIII Arctic Research Commission (Part 2301)

XXIV James Madison Memorial Fellowship Foundation (Parts 2400—2499)

XXV Corporation for National and Community Service (Parts 2500—2599)

Title 46—Shipping

I Coast Guard, Department of Transportation (Parts 1—199)

II Maritime Administration, Department of Transportation (Parts 200—399)

III Coast Guard (Great Lakes Pilotage), Department of Transportation (Parts 400—499)

IV Federal Maritime Commission (Parts 500—599)

Title 47—Telecommunication

I Federal Communications Commission (Parts 0—199)

II Office of Science and Technology Policy and National Security Council (Parts 200—299)

III National Telecommunications and Information Administration, Department of Commerce (Parts 300—399)

Title 48—Federal Acquisition Regulations System

1 Federal Acquisition Regulation (Parts 1—99)

2 Department of Defense (Parts 200—299)

3 Department of Health and Human Services (Parts 300—399)

4 Department of Agriculture (Parts 400—499)

5 General Services Administration (Parts 500—599)

6 Department of State (Parts 600—699)

Title 48—Federal Acquisition Regulations System—Continued

Chap.

7 United States Agency for International Development (Parts 700—799)

8 Department of Veterans Affairs (Parts 800—899)

9 Department of Energy (Parts 900—999)

10 Department of the Treasury (Parts 1000—1099)

12 Department of Transportation (Parts 1200—1299)

13 Department of Commerce (Parts 1300—1399)

14 Department of the Interior (Parts 1400—1499)

15 Environmental Protection Agency (Parts 1500—1599)

16 Office of Personnel Management Federal Employees Health Benefits Acquisition Regulation (Parts 1600—1699)

17 Office of Personnel Management (Parts 1700—1799)

18 National Aeronautics and Space Administration (Parts 1800—1899)

19 Broadcasting Board of Governors (Parts 1900—1999)

20 Nuclear Regulatory Commission (Parts 2000—2099)

21 Office of Personnel Management, Federal Employees Group Life Insurance Federal Acquisition Regulation (Parts 2100—2199)

23 Social Security Administration (Parts 2300—2399)

24 Department of Housing and Urban Development (Parts 2400—2499)

25 National Science Foundation (Parts 2500—2599)

28 Department of Justice (Parts 2800—2899)

29 Department of Labor (Parts 2900—2999)

34 Department of Education Acquisition Regulation (Parts 3400—3499)

35 Panama Canal Commission (Parts 3500—3599)

44 Federal Emergency Management Agency (Parts 4400—4499)

51 Department of the Army Acquisition Regulations (Parts 5100—5199)

52 Department of the Navy Acquisition Regulations (Parts 5200—5299)

53 Department of the Air Force Federal Acquisition Regulation Supplement (Parts 5300—5399)

54 Defense Logistics Agency, Department of Defense (Parts 5400—5499)

57 African Development Foundation (Parts 5700—5799)

61 General Services Administration Board of Contract Appeals (Parts 6100—6199)

63 Department of Transportation Board of Contract Appeals (Parts 6300—6399)

99 Cost Accounting Standards Board, Office of Federal Procurement Policy, Office of Management and Budget (Parts 9900—9999)

Title 49—Transportation

Chap.

SUBTITLE A—OFFICE OF THE SECRETARY OF TRANSPORTATION (PARTS 1—99)

SUBTITLE B—OTHER REGULATIONS RELATING TO TRANSPORTATION

I Research and Special Programs Administration, Department of Transportation (Parts 100—199)

II Federal Railroad Administration, Department of Transportation (Parts 200—299)

III Federal Motor Carrier Safety Administration, Department of Transportation (Parts 300—399)

IV Coast Guard, Department of Transportation (Parts 400—499)

V National Highway Traffic Safety Administration, Department of Transportation (Parts 500—599)

VI Federal Transit Administration, Department of Transportation (Parts 600—699)

VII National Railroad Passenger Corporation (AMTRAK) (Parts 700—799)

VIII National Transportation Safety Board (Parts 800—999)

X Surface Transportation Board, Department of Transportation (Parts 1000—1399)

XI Bureau of Transportation Statistics, Department of Transportation (Parts 1400—1499)

XII Transportation Security Administration, Department of Transportation (Parts 1500—1599)

Title 50—Wildlife and Fisheries

I United States Fish and Wildlife Service, Department of the Interior (Parts 1—199)

II National Marine Fisheries Service, National Oceanic and Atmospheric Administration, Department of Commerce (Parts 200—299)

III International Fishing and Related Activities (Parts 300—399)

IV Joint Regulations (United States Fish and Wildlife Service, Department of the Interior and National Marine Fisheries Service, National Oceanic and Atmospheric Administration, Department of Commerce); Endangered Species Committee Regulations (Parts 400—499)

V Marine Mammal Commission (Parts 500—599)

VI Fishery Conservation and Management, National Oceanic and Atmospheric Administration, Department of Commerce (Parts 600—699)

CFR Index and Finding Aids

Subject/Agency Index

List of Agency Prepared Indexes

Parallel Tables of Statutory Authorities and Rules

List of CFR Titles, Chapters, Subchapters, and Parts

Alphabetical List of Agencies Appearing in the CFR

Alphabetical List of Agencies Appearing in the CFR

(Revised as of July 1, 2003)

Agency	CFR Title, Subtitle or Chapter
Administrative Committee of the Federal Register	1, I
Advanced Research Projects Agency	32, I
Advisory Council on Historic Preservation	36, VIII
African Development Foundation	22, XV
Federal Acquisition Regulation	48, 57
Agency for International Development, United States	22, II
Federal Acquisition Regulation	48, 7
Agricultural Marketing Service	7, I, IX, X, XI
Agricultural Research Service	7, V
Agriculture Department	5, LXXIII
Agricultural Marketing Service	7, I, IX, X, XI
Agricultural Research Service	7, V
Animal and Plant Health Inspection Service	7, III; 9, I
Chief Financial Officer, Office of	7, XXX
Commodity Credit Corporation	7, XIV
Cooperative State Research, Education, and Extension Service	7, XXXIV
Economic Research Service	7, XXXVII
Energy, Office of	7, XXIX
Environmental Quality, Office of	7, XXXI
Farm Service Agency	7, VII, XVIII
Federal Acquisition Regulation	48, 4
Federal Crop Insurance Corporation	7, IV
Food and Nutrition Service	7, II
Food Safety and Inspection Service	9, III
Foreign Agricultural Service	7, XV
Forest Service	36, II
Grain Inspection, Packers and Stockyards Administration	7, VIII; 9, II
Information Resources Management, Office of	7, XXVII
Inspector General, Office of	7, XXVI
National Agricultural Library	7, XLI
National Agricultural Statistics Service	7, XXXVI
Natural Resources Conservation Service	7, VI
Operations, Office of	7, XXVIII
Procurement and Property Management, Office of	7, XXXII
Rural Business-Cooperative Service	7, XVIII, XLII
Rural Development Administration	7, XLII
Rural Housing Service	7, XVIII, XXXV
Rural Telephone Bank	7, XVI
Rural Utilities Service	7, XVII, XVIII, XLII
Secretary of Agriculture, Office of	7, Subtitle A
Transportation, Office of	7, XXXIII
World Agricultural Outlook Board	7, XXXVIII
Air Force Department	32, VII
Federal Acquisition Regulation Supplement	48, 53
Air Transportation Stabilization Board	14, VI
Alcohol and Tobacco Tax and Trade Bureau	27, I
Alcohol, Tobacco, Firearms, and Explosives, Bureau of	27, II
AMTRAK	49, VII
American Battle Monuments Commission	36, IV
American Indians, Office of the Special Trustee	25, VII
Animal and Plant Health Inspection Service	7, III; 9, I
Appalachian Regional Commission	5, IX

Agency	CFR Title, Subtitle or Chapter
Architectural and Transportation Barriers Compliance Board	36, XI
Arctic Research Commission	45, XXIII
Armed Forces Retirement Home	5, XI
Army Department	32, V
Engineers, Corps of	33, II; 36, III
Federal Acquisition Regulation	48, 51
Benefits Review Board	20, VII
Bilingual Education and Minority Languages Affairs, Office of	34, V
Blind or Severely Disabled, Committee for Purchase From People Who Are	41, 51
Broadcasting Board of Governors	22, V
Federal Acquisition Regulation	48, 19
Census Bureau	15, I
Centers for Medicare & Medicaid Services	42, IV
Central Intelligence Agency	32, XIX
Chief Financial Officer, Office of	7, XXX
Child Support Enforcement, Office of	45, III
Children and Families, Administration for	45, II, III, IV, X
Civil Rights, Commission on	45, VII
Civil Rights, Office for	34, I
Coast Guard	33, I; 46, I; 49, IV
Coast Guard (Great Lakes Pilotage)	46, III
Commerce Department	44, IV
Census Bureau	15, I
Economic Affairs, Under Secretary	37, V
Economic Analysis, Bureau of	15, VIII
Economic Development Administration	13, III
Emergency Management and Assistance	44, IV
Federal Acquisition Regulation	48, 13
Fishery Conservation and Management	50, VI
Foreign-Trade Zones Board	15, IV
Industry and Security, Bureau of	15, VII
International Trade Administration	15, III; 19, III
National Institute of Standards and Technology	15, II
National Marine Fisheries Service	50, II, IV, VI
National Oceanic and Atmospheric Administration	15, IX; 50, II, III, IV, VI
National Telecommunications and Information Administration	15, XXIII; 47, III
National Weather Service	15, IX
Patent and Trademark Office, United States	37, I
Productivity, Technology and Innovation, Assistant Secretary for	37, IV
Secretary of Commerce, Office of	15, Subtitle A
Technology, Under Secretary for	37, V
Technology Administration	15, XI
Technology Policy, Assistant Secretary for	37, IV
Commercial Space Transportation	14, III
Commodity Credit Corporation	7, XIV
Commodity Futures Trading Commission	5, XLI; 17, I
Community Planning and Development, Office of Assistant Secretary for	24, V, VI
Community Services, Office of	45, X
Comptroller of the Currency	12, I
Construction Industry Collective Bargaining Commission	29, IX
Consumer Product Safety Commission	5, LXXI; 16, II
Cooperative State Research, Education, and Extension Service	7, XXXIV
Copyright Office	37, II
Corporation for National and Community Service	45, XII, XXV
Cost Accounting Standards Board	48, 99
Council on Environmental Quality	40, V
Court Services and Offender Supervision Agency for the District of Columbia	28, VIII
Customs Service, United States	19, I
Defense Contract Audit Agency	32, I
Defense Department	5, XXVI; 32, Subtitle A; 40, VII

Agency	CFR Title, Subtitle or Chapter
Advanced Research Projects Agency	32, I
Air Force Department	32, VII
Army Department	32, V; 33, II; 36, III, 48, 51
Defense Intelligence Agency	32, I
Defense Logistics Agency	32, I, XII; 48, 54
Engineers, Corps of	33, II; 36, III
Federal Acquisition Regulation	48, 2
National Imagery and Mapping Agency	32, I
Navy Department	32, VI; 48, 52
Secretary of Defense, Office of	32, I
Defense Contract Audit Agency	32, I
Defense Intelligence Agency	32, I
Defense Logistics Agency	32, XII; 48, 54
Defense Nuclear Facilities Safety Board	10, XVII
Delaware River Basin Commission	18, III
District of Columbia, Court Services and Offender Supervision Agency for the	28, VIII
Drug Enforcement Administration	21, II
East-West Foreign Trade Board	15, XIII
Economic Affairs, Under Secretary	37, V
Economic Analysis, Bureau of	15, VIII
Economic Development Administration	13, III
Economic Research Service	7, XXXVII
Education, Department of	5, LIII
Bilingual Education and Minority Languages Affairs, Office of	34, V
Civil Rights, Office for	34, I
Educational Research and Improvement, Office of	34, VII
Elementary and Secondary Education, Office of	34, II
Federal Acquisition Regulation	48, 34
Postsecondary Education, Office of	34, VI
Secretary of Education, Office of	34, Subtitle A
Special Education and Rehabilitative Services, Office of	34, III
Vocational and Adult Education, Office of	34, IV
Educational Research and Improvement, Office of	34, VII
Elementary and Secondary Education, Office of	34, II
Emergency Oil and Gas Guaranteed Loan Board	13, V
Emergency Steel Guarantee Loan Board	13, IV
Employee Benefits Security Administration	29, XXV
Employees' Compensation Appeals Board	20, IV
Employees Loyalty Board	5, V
Employment and Training Administration	20, V
Employment Standards Administration	20, VI
Endangered Species Committee	50, IV
Energy, Department of	5, XXIII; 10, II, III, X
Federal Acquisition Regulation	48, 9
Federal Energy Regulatory Commission	5, XXIV; 18, I
Property Management Regulations	41, 109
Energy, Office of	7, XXIX
Engineers, Corps of	33, II; 36, III
Engraving and Printing, Bureau of	31, VI
Environmental Protection Agency	5, LIV; 40, I, IV, VII
Federal Acquisition Regulation	48, 15
Property Management Regulations	41, 115
Environmental Quality, Office of	7, XXXI
Equal Employment Opportunity Commission	5, LXII; 29, XIV
Equal Opportunity, Office of Assistant Secretary for	24, I
Executive Office of the President	3, I
Administration, Office of	5, XV
Environmental Quality, Council on	40, V
Management and Budget, Office of	5, III, LXXVII; 14, VI; 48, 99
National Drug Control Policy, Office of	21, III
National Security Council	32, XXI; 47, 2
Presidential Documents	3
Science and Technology Policy, Office of	32, XXIV; 47, II

Agency	CFR Title, Subtitle or Chapter
Trade Representative, Office of the United States	15, XX
Export-Import Bank of the United States	5, LII; 12, IV
Family Assistance, Office of	45, II
Farm Credit Administration	5, XXXI; 12, VI
Farm Credit System Insurance Corporation	5, XXX; 12, XIV
Farm Service Agency	7, VII, XVIII
Federal Acquisition Regulation	48, 1
Federal Aviation Administration	14, I
Commercial Space Transportation	14, III
Federal Claims Collection Standards	31, IX
Federal Communications Commission	5, XXIX; 47, I
Federal Contract Compliance Programs, Office of	41, 60
Federal Crop Insurance Corporation	7, IV
Federal Deposit Insurance Corporation	5, XXII; 12, III
Federal Election Commission	11, I
Federal Emergency Management Agency	44, I
Federal Acquisition Regulation	48, 44
Federal Employees Group Life Insurance Federal Acquisition Regulation	48, 21
Federal Employees Health Benefits Acquisition Regulation	48, 16
Federal Energy Regulatory Commission	5, XXIV; 18, I
Federal Financial Institutions Examination Council	12, XI
Federal Financing Bank	12, VIII
Federal Highway Administration	23, I, II
Federal Home Loan Mortgage Corporation	1, IV
Federal Housing Enterprise Oversight Office	12, XVII
Federal Housing Finance Board	12, IX
Federal Labor Relations Authority, and General Counsel of the Federal Labor Relations Authority	5, XIV; 22, XIV
Federal Law Enforcement Training Center	31, VII
Federal Management Regulation	41, 102
Federal Maritime Commission	46, IV
Federal Mediation and Conciliation Service	29, XII
Federal Mine Safety and Health Review Commission	5, LXXIV; 29, XXVII
Federal Motor Carrier Safety Administration	49, III
Federal Prison Industries, Inc.	28, III
Federal Procurement Policy Office	48, 99
Federal Property Management Regulations	41, 101
Federal Railroad Administration	49, II
Federal Register, Administrative Committee of	1, I
Federal Register, Office of	1, II
Federal Reserve System	12, II
Board of Governors	5, LVIII
Federal Retirement Thrift Investment Board	5, VI, LXXVI
Federal Service Impasses Panel	5, XIV
Federal Trade Commission	5, XLVII; 16, I
Federal Transit Administration	49, VI
Federal Travel Regulation System	41, Subtitle F
Fine Arts, Commission on	45, XXI
Fiscal Service	31, II
Fish and Wildlife Service, United States	50, I, IV
Fishery Conservation and Management	50, VI
Food and Drug Administration	21, I
Food and Nutrition Service	7, II
Food Safety and Inspection Service	9, III
Foreign Agricultural Service	7, XV
Foreign Assets Control, Office of	31, V
Foreign Claims Settlement Commission of the United States	45, V
Foreign Service Grievance Board	22, IX
Foreign Service Impasse Disputes Panel	22, XIV
Foreign Service Labor Relations Board	22, XIV
Foreign-Trade Zones Board	15, IV
Forest Service	36, II
General Accounting Office	4, I
General Services Administration	5, LVII; 41, 105
Contract Appeals, Board of	48, 61
Federal Acquisition Regulation	48, 5

Agency	CFR Title, Subtitle or Chapter
Federal Management Regulation	41, 102
Federal Property Management Regulations	41, 101
Federal Travel Regulation System	41, Subtitle F
General	41, 300
Payment From a Non-Federal Source for Travel Expenses	41, 304
Payment of Expenses Connected With the Death of Certain Employees	41, 303
Relocation Allowances	41, 302
Temporary Duty (TDY) Travel Allowances	41, 301
Geological Survey	30, IV
Government Ethics, Office of	5, XVI
Government National Mortgage Association	24, III
Grain Inspection, Packers and Stockyards Administration	7, VIII; 9, II
Harry S. Truman Scholarship Foundation	45, XVIII
Health and Human Services, Department of	5, XLV; 45, Subtitle A
Centers for Medicare & Medicaid Services	42, IV
Child Support Enforcement, Office of	45, III
Children and Families, Administration for	45, II, III, IV, X
Community Services, Office of	45, X
Family Assistance, Office of	45, II
Federal Acquisition Regulation	48, 3
Food and Drug Administration	21, I
Human Development Services, Office of	45, XIII
Indian Health Service	25, V; 42, I
Inspector General (Health Care), Office of	42, V
Public Health Service	42, I
Refugee Resettlement, Office of	45, IV
Homeland Security, Department of	6, I
Federal Emergency Management Agency	44, I
Immigration and Naturalization	8, I
Housing and Urban Development, Department of	5, LXV; 24, Subtitle B
Community Planning and Development, Office of Assistant Secretary for	24, V, VI
Equal Opportunity, Office of Assistant Secretary for	24, I
Federal Acquisition Regulation	48, 24
Federal Housing Enterprise Oversight, Office of	12, XVII
Government National Mortgage Association	24, III
Housing—Federal Housing Commissioner, Office of Assistant Secretary for	24, II, VIII, X, XX
Housing, Office of, and Multifamily Housing Assistance Restructuring, Office of	24, IV
Inspector General, Office of	24, XII
Public and Indian Housing, Office of Assistant Secretary for	24, IX
Secretary, Office of	24, Subtitle A, VII
Housing—Federal Housing Commissioner, Office of Assistant Secretary for	24, II, VIII, X, XX
Housing, Office of, and Multifamily Housing Assistance Restructuring, Office of	24, IV
Human Development Services, Office of	45, XIII
Immigration and Naturalization	8, I
Immigration Review, Executive Office for	8, V
Independent Counsel, Office of	28, VII
Indian Affairs, Bureau of	25, I, V
Indian Affairs, Office of the Assistant Secretary	25, VI
Indian Arts and Crafts Board	25, II
Indian Health Service	25, V; 42, I
Industry and Security, Bureau of	15, VII
Information Resources Management, Office of	7, XXVII
Information Security Oversight Office, National Archives and Records Administration	32, XX
Inspector General	
Agriculture Department	7, XXVI
Health and Human Services Department	42, V
Housing and Urban Development Department	24, XII
Institute of Peace, United States	22, XVII
Inter-American Foundation	5, LXIII; 22, X
Interior Department	

Agency	CFR Title, Subtitle or Chapter
American Indians, Office of the Special Trustee	25, VII
Endangered Species Committee	50, IV
Federal Acquisition Regulation	48, 14
Federal Property Management Regulations System	41, 114
Fish and Wildlife Service, United States	50, I, IV
Geological Survey	30, IV
Indian Affairs, Bureau of	25, I, V
Indian Affairs, Office of the Assistant Secretary	25, VI
Indian Arts and Crafts Board	25, II
Land Management, Bureau of	43, II
Minerals Management Service	30, II
National Indian Gaming Commission	25, III
National Park Service	36, I
Reclamation, Bureau of	43, I
Secretary of the Interior, Office of	43, Subtitle A
Surface Mining and Reclamation Appeals, Board of	30, III
Surface Mining Reclamation and Enforcement, Office of	30, VII
Internal Revenue Service	26, I
International Boundary and Water Commission, United States and Mexico, United States Section	22, XI
International Development, United States Agency for	22, II
Federal Acquisition Regulation	48, 7
International Development Cooperation Agency, United States	22, XII
International Fishing and Related Activities	50, III
International Investment, Office of	31, VIII
International Joint Commission, United States and Canada	22, IV
International Organizations Employees Loyalty Board	5, V
International Trade Administration	15, III; 19, III
International Trade Commission, United States	19, II
Interstate Commerce Commission	5, XL
James Madison Memorial Fellowship Foundation	45, XXIV
Japan–United States Friendship Commission	22, XVI
Joint Board for the Enrollment of Actuaries	20, VIII
Justice Department	5, XXVIII; 28, I, XI; 40, IV
Alcohol, Tobacco, Firearms, and Explosives, Bureau of	27, II
Drug Enforcement Administration	21, II
Federal Acquisition Regulation	48, 28
Federal Claims Collection Standards	31, IX
Federal Prison Industries, Inc.	28, III
Foreign Claims Settlement Commission of the United States	45, V
Immigration Review, Executive Office for	8, V
Offices of Independent Counsel	28, VI
Prisons, Bureau of	28, V
Property Management Regulations	41, 128
Labor Department	5, XLII
Benefits Review Board	20, VII
Employee Benefits Security Administration	29, XXV
Employees' Compensation Appeals Board	20, IV
Employment and Training Administration	20, V
Employment Standards Administration	20, VI
Federal Acquisition Regulation	48, 29
Federal Contract Compliance Programs, Office of	41, 60
Federal Procurement Regulations System	41, 50
Labor-Management Standards, Office of	29, II, IV
Mine Safety and Health Administration	30, I
Occupational Safety and Health Administration	29, XVII
Public Contracts	41, 50
Secretary of Labor, Office of	29, Subtitle A
Veterans' Employment and Training Service, Office of the Assistant Secretary for	41, 61; 20, IX
Wage and Hour Division	29, V
Workers' Compensation Programs, Office of	20, I
Labor-Management Standards, Office of	29, II, IV
Land Management, Bureau of	43, II

Agency	CFR Title, Subtitle or Chapter
Legal Services Corporation	45, XVI
Library of Congress	36, VII
Copyright Office	37, II
Local Television Loan Guarantee Board	7, XX
Management and Budget, Office of	5, III, LXXVII; 14, VI; 48, 99
Marine Mammal Commission	50, V
Maritime Administration	46, II
Merit Systems Protection Board	5, II
Micronesian Status Negotiations, Office for	32, XXVII
Mine Safety and Health Administration	30, I
Minerals Management Service	30, II
Minority Business Development Agency	15, XIV
Miscellaneous Agencies	1, IV
Monetary Offices	31, I
Morris K. Udall Scholarship and Excellence in National Environmental Policy Foundation	36, XVI
National Aeronautics and Space Administration	5, LIX; 14, V
Federal Acquisition Regulation	48, 18
National Agricultural Library	7, XLI
National Agricultural Statistics Service	7, XXXVI
National and Community Service, Corporation for	45, XII, XXV
National Archives and Records Administration	5, LXVI; 36, XII
Information Security Oversight Office	32, XX
National Bureau of Standards	15, II
National Capital Planning Commission	1, IV
National Commission for Employment Policy	1, IV
National Commission on Libraries and Information Science	45, XVII
National Council on Disability	34, XII
National Counterintelligence Center	32, XVIII
National Credit Union Administration	12, VII
National Crime Prevention and Privacy Compact Council	28, IX
National Drug Control Policy, Office of	21, III
National Foundation on the Arts and the Humanities	45, XI
National Highway Traffic Safety Administration	23, II, III; 49, V
National Imagery and Mapping Agency	32, I
National Indian Gaming Commission	25, III
National Institute for Literacy	34, XI
National Institute of Standards and Technology	15, II
National Labor Relations Board	5, LXI; 29, I
National Marine Fisheries Service	50, II, IV, VI
National Mediation Board	29, X
National Oceanic and Atmospheric Administration	15, IX; 50, II, III, IV, VI
National Park Service	36, I
National Railroad Adjustment Board	29, III
National Railroad Passenger Corporation (AMTRAK)	49, VII
National Science Foundation	5, XLIII; 45, VI
Federal Acquisition Regulation	48, 25
National Security Council	32, XXI
National Security Council and Office of Science and Technology Policy	47, II
National Telecommunications and Information Administration	15, XXIII; 47, III
National Transportation Safety Board	49, VIII
National Weather Service	15, IX
Natural Resources Conservation Service	7, VI
Navajo and Hopi Indian Relocation, Office of	25, IV
Navy Department	32, VI
Federal Acquisition Regulation	48, 52
Neighborhood Reinvestment Corporation	24, XXV
Northeast Interstate Low-Level Radioactive Waste Commission	10, XVIII
Nuclear Regulatory Commission	5, XLVIII; 10, I
Federal Acquisition Regulation	48, 20
Occupational Safety and Health Administration	29, XVII
Occupational Safety and Health Review Commission	29, XX
Offices of Independent Counsel	28, VI

Agency	CFR Title, Subtitle or Chapter
Oklahoma City National Memorial Trust	36, XV
Operations Office	7, XXVIII
Overseas Private Investment Corporation	5, XXXIII; 22, VII
Panama Canal Commission	48, 35
Panama Canal Regulations	35, I
Patent and Trademark Office, United States	37, I
Payment From a Non-Federal Source for Travel Expenses	41, 304
Payment of Expenses Connected With the Death of Certain Employees	41, 303
Peace Corps	22, III
Pennsylvania Avenue Development Corporation	36, IX
Pension Benefit Guaranty Corporation	29, XL
Personnel Management, Office of	5, I, XXXV; 45, VIII
Federal Acquisition Regulation	48, 17
Federal Employees Group Life Insurance Federal Acquisition Regulation	48, 21
Federal Employees Health Benefits Acquisition Regulation	48, 16
Postal Rate Commission	5, XLVI; 39, III
Postal Service, United States	5, LX; 39, I
Postsecondary Education, Office of	34, VI
President's Commission on White House Fellowships	1, IV
Presidential Documents	3
Presidio Trust	36, X
Prisons, Bureau of	28, V
Procurement and Property Management, Office of	7, XXXII
Productivity, Technology and Innovation, Assistant Secretary	37, IV
Public Contracts, Department of Labor	41, 50
Public and Indian Housing, Office of Assistant Secretary for	24, IX
Public Health Service	42, I
Railroad Retirement Board	20, II
Reclamation, Bureau of	43, I
Refugee Resettlement, Office of	45, IV
Regional Action Planning Commissions	13, V
Relocation Allowances	41, 302
Research and Special Programs Administration	49, I
Rural Business-Cooperative Service	7, XVIII, XLII
Rural Development Administration	7, XLII
Rural Housing Service	7, XVIII, XXXV
Rural Telephone Bank	7, XVI
Rural Utilities Service	7, XVII, XVIII, XLII
Saint Lawrence Seaway Development Corporation	33, IV
Science and Technology Policy, Office of	32, XXIV
Science and Technology Policy, Office of, and National Security Council	47, II
Secret Service	31, IV
Securities and Exchange Commission	17, II
Selective Service System	32, XVI
Small Business Administration	13, I
Smithsonian Institution	36, V
Social Security Administration	20, III; 48, 23
Soldiers' and Airmen's Home, United States	5, XI
Special Counsel, Office of	5, VIII
Special Education and Rehabilitative Services, Office of	34, III
State Department	22, I; 28, XI
Federal Acquisition Regulation	48, 6
Surface Mining and Reclamation Appeals, Board of	30, III
Surface Mining Reclamation and Enforcement, Office of	30, VII
Surface Transportation Board	49, X
Susquehanna River Basin Commission	18, VIII
Technology Administration	15, XI
Technology Policy, Assistant Secretary for	37, IV
Technology, Under Secretary for	37, V
Tennessee Valley Authority	5, LXIX; 18, XIII
Thrift Supervision Office, Department of the Treasury	12, V
Trade Representative, United States, Office of	15, XX
Transportation, Department of	5, L

Agency	CFR Title, Subtitle or Chapter
Coast Guard	33, I; 46, I; 49, IV
Coast Guard (Great Lakes Pilotage)	46, III
Commercial Space Transportation	14, III
Contract Appeals, Board of	48, 63
Emergency Management and Assistance	44, IV
Federal Acquisition Regulation	48, 12
Federal Aviation Administration	14, I
Federal Highway Administration	23, I, II
Federal Motor Carrier Safety Administration	49, III
Federal Railroad Administration	49, II
Federal Transit Administration	49, VI
Maritime Administration	46, II
National Highway Traffic Safety Administration	23, II, III; 49, V
Research and Special Programs Administration	49, I
Saint Lawrence Seaway Development Corporation	33, IV
Secretary of Transportation, Office of	14, II; 49, Subtitle A
Surface Transportation Board	49, X
Transportation Security Administration	49, XII
Transportation Statistics Bureau	49, XI
Transportation, Office of	7, XXXIII
Transportation Security Administration	49, XII
Transportation Statistics Bureau	49, XI
Travel Allowances, Temporary Duty (TDY)	41, 301
Treasury Department	5, XXI; 12, XV; 17, IV; 31, IX
Alcohol and Tobacco Tax and Trade Bureau	27, I
Community Development Financial Institutions Fund	12, XVIII
Comptroller of the Currency	12, I
Customs Service, United States	19, I
Engraving and Printing, Bureau of	31, VI
Federal Acquisition Regulation	48, 10
Federal Law Enforcement Training Center	31, VII
Fiscal Service	31, II
Foreign Assets Control, Office of	31, V
Internal Revenue Service	26, I
International Investment, Office of	31, VIII
Monetary Offices	31, I
Secret Service	31, IV
Secretary of the Treasury, Office of	31, Subtitle A
Thrift Supervision, Office of	12, V
Truman, Harry S. Scholarship Foundation	45, XVIII
United States and Canada, International Joint Commission	22, IV
United States and Mexico, International Boundary and Water Commission, United States Section	22, XI
Utah Reclamation Mitigation and Conservation Commission	43, III
Veterans Affairs Department	38, I
Federal Acquisition Regulation	48, 8
Veterans' Employment and Training Service, Office of the Assistant Secretary for	41, 61; 20, IX
Vice President of the United States, Office of	32, XXVIII
Vocational and Adult Education, Office of	34, IV
Wage and Hour Division	29, V
Water Resources Council	18, VI
Workers' Compensation Programs, Office of	20, I
World Agricultural Outlook Board	7, XXXVIII

List of CFR Sections Affected

All changes in this volume of the Code of Federal Regulations which were made by documents published in the FEDERAL REGISTER since January 1, 2001, are enumerated in the following list. Entries indicate the nature of the changes effected. Page numbers refer to FEDERAL REGISTER pages. The user should consult the entries for chapters and parts as well as sections for revisions.

Title 40 was established at 36 FR 12213, June 29, 1971. For the period before January 1, 2001, see the ''List of CFR Sections Affected, 1964–1972, 1973–1985, and 1986–2000'', published in ten separate volumes.

2001

40 CFR

66 FR Page

Chapter VI

1602 Added 17080
1610 Added 1050
1610.2 Added 17363
1610.3 Added 17363
1611 Added 17366
1611.2 Amended 23854
1611.6 Existing text designated as (a); (b) added 23854
1612 Added 17366

2002

40 CFR

67 FR Page

Chapter I

1048—1068 (Subchapter U) Added 68347

40 CFR—Continued

67 FR Page

Chapter I—Continued

1065.210 Corrected 72724

Chapter V

1518 Added 62189

Chapter VI

1603 Added 35445

2003

(Regulations published from January 1, 2003, through July 1, 2003)

40 CFR

68 FR Page

Chapter VI

1610 Authority citation revised 4393
1610.4 Added 4393