AUTHENTICATED
U.S. GOVERNMENT
INFORMATION
GPO

number of revertants per kilometer (or mile, or brake-horsepower/hour), and standard deviation; and

(g) *References.* For additional background information on this test guideline, the following references should be consulted.

(1) 40 CFR 798.5265, The *Salmonella typhimurium* reverse mutation asay.

(2) Ames, B.N., McCann, J., Yamasaki, E. ''Methods for detecting carcinogens and mutagens with the Salmonella/mammalian microsome mutagenicity test,'' Mutation Research 31:347–364 (1975).

(3) Huisingh, J.L., et al.,''Mutagenic and Carcinogenic Potency of Extracts of Diesel and Related Environmental Emissions: Study Design, Sample Generation, Collection, and Preparation''. In: Health Effects of Diesel Engine Emissions, Vol. II, W.E. Pepelko, R., M., Danner and N. A. Clarke (Eds.), US EPA, Cincinnati, EPA–600/9–80–057b, pp. 788–800 (1980).

(4) [Reserved]

(5) Claxton, L.D., Allen, J., Auletta, A., Mortelmans, K., Nestmann, E., Zeiger, E. ''Guide for the *Salmonella typhimurium*/mammalian microsome tests for bacterial mutagenicity'' Mutation Research 189(2):83–91 (1987).

(6) Claxton, L., Houk, V.S., Allison, J.C., Creason, J., ''Evaluating the relationship of metabolic activation system concentrations and chemical dose concentrations for the Salmonella Spiral and Plate Assays'' Mutation Research 253:127–136 (1991).

(7) Claxton, L., Houk, V.S., Monteith, L.G., Myers, L.E., Hughes, T.J., ''Assessing the use of known mutagens to calibrate the *Salmonella typhimurium* mutagenicity assay: I. Without exogenous activation.'' Mutation Research 253:137–147 (1991).

(8) Claxton, L., Houk, V.S., Warner, J.R., Myers, L.E., Hughes, T.J., ''Assessing the use of known mutagens to calibrate the *Salmonella typhimurium* mutagenicity assay: II. With exogenous activation.'' Mutation Research 253:149–159 (1991).

(9) Claxton, L., Creason, J., Lares, B., Augurell, E., Bagley, S., Bryant, D.W., Courtois, Y.A., Douglas, G., Clare, C.B., Goto, S., Quillardet, P., Jagannath, D.R., Mohn, G., Neilsen, P.A., Ohnishi, Y., Ong, T., Pederson, T.C., Shimizu, H., Nylund, L., Tokiwa, H., Vink, I.G.R., Wang, Y., Warshawsky, D., ''Results of the IPCS Collaborative Study on Complex Mixtures'' Mutation Research 276:23–32 (1992).

(10) Claxton, L., Douglas, G., Krewski, D., Lewtas, J., Matsushita, H., Rosenkranz, H., ''Overview, conclusions, and recommendations of the IPCS Collaborative Study on Complex Mixtures'' Mutation Research 276:61–80 (1992).

(11) Houk, V.S., Schalkowsky, S., and Claxton, L.D., ''Development and Validation of the Spiral Salmonella Assay: An Automated Approach to Bacterial Mutagenicity Testing'' Mutation Research 223:49–64 (1989).

(12) Jones, E., Richold, M., May, J.H., and Saje, A. ''The Assessment of the Mutagenic Potential of Vehicle Engine Exhaust in the Ames Salmonella Assay Using a Direct Exposure Method'' Mutation Research 97:35–40 (1985).

(13) Maron, D., and Ames, B. N., Revised methods for the Salmonella mutagenicity test, Mutation Research, 113:173–212 (1983).

(14) Prival, M.J., and Mitchell, V.D. ''Analysis of a method for testing azo dyes for mutagenic activity in Salmonella typhimurium in the presence of flavin mononucleotide and hamster liver S–9,'' Mutation Research 97:103–116 (1982).

(15) Rosenkranz, H.S., et.al. ''Nitropyrenes: Isolation, identification, and reduction of mutagenic impurities in carbon black and toners'' Science 209:1039–43 (1980).

(16) Stump, F., Snow, R., et.al., ''Trapping gaseous hydrocarbons for mutagenic testing'' SAE Technical Paper Series, No. 820776 (1982).

(17) Vogel, H.J., Bonner, D.M. ''Acetylornithinase of E. coli: partial purification and some properties,'' Journal of Biological Chemistry. 218:97–106 (1956).

[59 FR 33093, June 27, 1994, as amended at 61 FR 36513, July 11, 1996]

PART 80—REGULATION OF FUELS AND FUEL ADDITIVES

Subpart A—General Provisions

Sec.

80.1 Scope.

80.2 Definitions.
80.3 Test methods.
80.4 Right of entry; tests and inspections.
80.5 Penalties.
80.7 Requests for information.

Subpart B—Controls and Prohibitions

80.20–80.21 [Reserved]
80.22 Controls and prohibitions.
80.23 Liability for violations.
80.24 Controls applicable to motor vehicle manufacturers.
80.25 [Reserved]
80.26 Confidentiality of information.
80.27 Controls and prohibitions on gasoline volatility.
80.28 Liability for violations of gasoline volatility controls and prohibitions.
80.29 Controls and prohibitions on diesel fuel quality.
80.30 Liability for violations of diesel fuel control and prohibitions.
80.32 Controls applicable to liquefied petroleum gas retailers and wholesale purchaser-consumers.
80.33 Controls applicable to natural gas retailers and wholesale purchaser-consumers.

Subpart C—Oxygenated Gasoline

80.35 Labeling of retail gasoline pumps; oxygenated gasoline.
80.36–80.39 [Reserved]

Subpart D—Reformulated Gasoline

80.40 Fuel certification procedures.
80.41 Standards and requirements for compliance.
80.42 Simple emissions model.
80.43–80.44 [Reserved]
80.45 Complex emissions model.
80.46 Measurement of reformulated gasoline fuel parameters.
80.47 [Reserved]
80.48 Augmentation of the complex emission model by vehicle testing.
80.49 Fuels to be used in augmenting the complex emission model through vehicle testing.
80.50 General test procedure requirements for augmentation of the emission models.
80.51 Vehicle test procedures.
80.52 Vehicle preconditioning.
80.53–80.54 [Reserved]
80.55 Measurement methods for benzene and 1,3-butadiene.
80.56 Measurement methods for formaldehyde and acetaldehyde.
80.57–80.58 [Reserved]
80.59 General test fleet requirements for vehicle testing.
80.60 Test fleet requirements for exhaust emission testing.
80.61 [Reserved]
80.62 Vehicle test procedures to place vehicles in emitter group sub-fleets.
80.63–80.64 [Reserved]
80.65 General requirements for refiners, importers, and oxygenate blenders.
80.66 Calculation of reformulated gasoline properties.
80.67 Compliance on average.
80.68 Compliance surveys.
80.69 Requirements for downstream oxygenate blending.
80.70 Covered areas.
80.71 Descriptions of VOC-control regions.
80.72 Procedures for opting out of the covered areas.
80.73 Inability to produce conforming gasoline in extraordinary circumstances.
80.74 Recordkeeping requirements.
80.75 Reporting requirements.
80.76 Registration of refiners, importers or oxygenate blenders.
80.77 Product transfer documentation.
80.78 Controls and prohibitions on reformulated gasoline.
80.79 Liability for violations of the prohibited activities.
80.80 Penalties.
80.81 Enforcement exemptions for California gasoline.
80.82 Conventional gasoline marker. [Reserved]
80.83 Renewable oxygenate requirements.
80.84–80.89 [Reserved]

Subpart E—Anti-Dumping

80.90 Conventional gasoline baseline emissions determination.
80.91 Individual baseline determination.
80.92 Baseline auditor requirements.
80.93 Individual baseline submission and approval.
80.94 Requirements for gasoline produced at foreign refineries.
80.95–80.100 [Reserved]
80.101 Standards applicable to refiners and importers.
80.102 Controls applicable to blendstocks.
80.103 Registration of refiners and importers.
80.104 Recordkeeping requirements.
80.105 Reporting requirements.
80.106 Product transfer documents.
80.107–80.124 [Reserved]

Subpart F—Attest Engagements

80.125 Attest engagements.
80.126 Definitions.
80.127 Sample size guidelines.
80.128 Agreed upon procedures for refiners and importers.
80.129 Agreed upon procedures for downstream oxygenate blenders.
80.130 Agreed upon procedures reports.
80.131–80.135 [Reserved]

Subpart G—Detergent Gasoline

80.140 Definitions.
80.141 Interim detergent gasoline program.
80.142–80.154 [Reserved]
80.155 Interim detergent program controls and prohibitions.
80.156 Liability for violations of the interim detergent program controls and prohibitions.
80.157 Volumetric additive reconciliation (''VAR''), equipment calibration, and recordkeeping requirements.
80.158 Product transfer documents (PTDs).
80.159 Penalties.
80.160 Exemptions.
80.161 Detergent additive certification program.
80.162 Additive compositional data.
80.163 Detergent certification options.
80.164 Certification test fuels.
80.165 Certification test procedures and standards.
80.166 Carburetor deposit control performance test and test fuel guidelines.
80.167 Confirmatory testing.
80.168 Detergent certification program controls and prohibitions.
80.169 Liability for violations of the detergent certification program controls and prohibitions.
80.170 Volumetric additive reconciliation (VAR), equipment calibration, and recordkeeping requirements.
80.171 Product transfer documents (PTDs).
80.172 Penalties.
80.173 Exemptions.
80.174 Addresses.

Subpart H—Gasoline Sulfur

GENERAL INFORMATION

80.180–80.185 [Reserved]
80.190 Who must register with EPA under the sulfur program?

GASOLINE SULFUR STANDARDS

80.195 What are the gasoline sulfur standards for refiners and importers?
80.200 What gasoline is subject to the sulfur standards and requirements?
80.205 How is the annual refinery or importer average and corporate pool average sulfur level determined?
80.210 What sulfur standards apply to gasoline downstream from refineries and importers?
80.211 [Reserved]
80.212 What requirements apply to oxygenate blenders?
80.213–80.214 [Reserved]

GEOGRAPHIC PHASE-IN PROGRAM

80.215 What is the scope of the geographic phase-in program?
80.216 What standards apply to gasoline produced or imported for use in the GPA?
80.217 How does a refiner or importer apply for the GPA standards?
80.218 [Reserved]
80.219 Designation and downstream requirements for GPA gasoline.
80.220 What are the downstream standards for GPA gasoline?

HARDSHIP PROVISIONS

80.225 What is the definition of a small refiner?
80.230 Who is not eligible for the hardship provisions for small refiners?
80.235 How does a refiner obtain approval as a small refiner?
80.240 What are the small refiner gasoline sulfur standards?
80.245 How does a small refiner apply for a sulfur baseline?
80.250 How is the small refiner sulfur baseline and volume determined?
80.255 Compliance plans and demonstration of commitment to produce low sulfur gasoline.
80.260 What are the procedures and requirements for obtaining a hardship extension?
80.265 How will the EPA approve or disapprove a hardship extension application?
80.270 Can a refiner seek temporary relief from the requirements of this subpart?

ALLOTMENT TRADING PROGRAM

80.275 How are allotments generated and used?

AVERAGING, BANKING AND TRADING (ABT) PROGRAM—GENERAL INFORMATION

80.280 [Reserved]
80.285 Who may generate credits under the ABT program?
80.290 How does a refiner apply for a sulfur baseline?

ABT PROGRAM—BASELINE DETERMINATION

80.295 How is a refinery sulfur baseline determined?
80.300 [Reserved]

ABT PROGRAM—CREDIT GENERATION

80.305 How are credits generated during the time period 2000 through 2003?
80.310 How are credits generated beginning in 2004?

ABT PROGRAM—CREDIT USE

80.315 How are credits used and what are the limitations on credit use?
80.320 [Reserved]
80.325 [Reserved]

SAMPLING, TESTING AND RETENTION REQUIREMENTS FOR REFINERS AND IMPORTERS

80.330 What are the sampling and testing requirements for refiners and importers?
80.335 What gasoline sample retention requirements apply to refiners and importers?
80.340 What standards and requirements apply to refiners producing gasoline by blending blendstocks into previously certified gasoline (PCG)?
80.345 [Reserved]
80.350 What alternative sulfur standards and requirements apply to importers who transport gasoline by truck?
80.355 [Reserved]

RECORDKEEPING AND REPORTING REQUIREMENTS

80.360 [Reserved]
80.365 What records must be kept?
80.370 What are the sulfur reporting requirements?
80.371–80.373 [Reserved]

EXEMPTIONS

80.374 What if a refiner or importer is unable to produce gasoline conforming to the requirements of this subpart?
80.375 What requirements apply to California gasoline?
80.380 What are the requirements for obtaining an exemption for gasoline used for research, development or testing purposes?

VIOLATION PROVISIONS

80.385 What acts are prohibited under the gasoline sulfur program?
80.390 What evidence may be used to determine compliance with the prohibitions and requirements of this subpart and liability for violations of this subpart?
80.395 Who is liable for violations under the gasoline sulfur program?
80.400 What defenses apply to persons deemed liable for a violation of a prohibited act?
80.405 What penalties apply under this subpart?

PROVISIONS FOR FOREIGN REFINERS WITH INDIVIDUAL SULFUR BASELINES

80.410 What are the additional requirements for gasoline produced at foreign refineries having individual small refiner sulfur baselines, foreign refineries granted temporary relief under §80.270, or baselines for generating credits during 2000 through 2003?

ATTEST ENGAGEMENTS

80.415 What are the attest engagement requirements for gasoline sulfur compliance applicable to refiners and importers?

Subpart I—Motor Vehicle Diesel Fuel

GENERAL INFORMATION

80.500 What are the implementation dates for the diesel fuel sulfur control program?
80.501 What diesel fuel is subject to the provisions of this subpart?
80.502–80.519 [Reserved]

MOTOR VEHICLE DIESEL FUEL STANDARDS AND REQUIREMENTS

80.520 What are the standards and dye requirements for motor vehicle diesel fuel?
80.521 What are the standards and identification requirements for motor vehicle diesel fuel additives?
80.522 May used motor oil be dispensed into diesel motor vehicles?
80.523 What diesel fuel designation requirements apply to refiners and importers?
80.524 What sulfur content standard applies to motor vehicle diesel fuel downstream of the refinery or importer?
80.525 What requirements apply to kerosene blenders?
80.526 [Reserved]
80.527 Under what conditions may motor vehicle diesel fuel subject to the 15 ppm sulfur standard be downgraded as motor vehicle diesel fuel subject to the 500 ppm sulfur standard?
80.528–80.529 [Reserved]

TEMPORARY COMPLIANCE OPTION

80.530 Under what conditions can 500 ppm motor vehicle diesel fuel be produced or imported?
80.531 How are motor vehicle diesel fuel credits generated?
80.532 How are credits used and transferred?
80.533–80.539 [Reserved]

GEOGRAPHIC PHASE-IN PROVISIONS

80.540 How may a refiner be approved to produce gasoline under the GPA gasoline sulfur standards in 2007 and 2008?
80.541–80.549 [Reserved]

SMALL REFINER HARDSHIP PROVISIONS

80.550 What is the definition of a small refiner under this subpart?
80.551 How does a refiner obtain approval as a small refiner under this subpart?
80.552 What compliance options are available to small refiners?
80.553 Under what conditions may the small refiner gasoline sulfur standards be extended for a small refiner of motor vehicle diesel fuel?
80.554–80.559 [Reserved]

OTHER HARDSHIP PROVISIONS

80.560 How can a refiner seek temporary relief from the requirements of this subpart in case of extreme hardship circumstances?
80.561 How can a refiner or importer seek temporary relief from the requirements of this subpart in case of extreme unforseen circumstances?
80.562–80.569 [Reserved]

LABELING REQUIREMENTS

80.570 What labeling requirements apply to retailers and wholesale purchaser-consumers of motor vehicle diesel fuel?
80.571–80.579 [Reserved]

SAMPLING AND TESTING

80.580 What are the sampling and testing methods for sulfur?
80.581–80.589 [Reserved]

RECORDKEEPING AND REPORTING REQUIREMENTS

80.590 What are the product transfer document requirements for motor vehicle diesel fuel?
80.591 What are the product transfer document requirements for additives to be used in motor vehicle diesel fuel?
80.592 What records must be kept?
80.593 What are the reporting and registration requirements for refiners and importers of motor vehicle diesel fuel subject to temporary refiner relief standards?
80.594 What are the pre-compliance reporting requirements?
80.595 How does a refiner apply for a motor vehicle diesel fuel volume baseline?
80.596 How is a refinery motor vehicle diesel fuel volume baseline calculated?
80.597 What are the registration requirements?
80.598–80.599 [Reserved]

EXEMPTIONS

80.600 What are the requirements for obtaining an exemption for motor vehicle diesel fuel used for research, development or testing purposes?
80.601 What requirements apply to motor vehicle diesel fuel for use in the Territories?
80.602 What exemption applies to diesel fuel used in vehicles having a national security exemption from motor vehicle emissions standards?
80.603–80.609 [Reserved]

VIOLATION PROVISIONS

80.610 What acts are prohibited under the diesel fuel sulfur program?
80.611 What evidence may be used to determine compliance with the prohibitions and requirements of this subpart and liability for violations of this subpart?
80.612 Who is liable for violations of this subpart?
80.613 What defenses apply to persons deemed liable for a violation of a prohibited act?
80.614 What penalties apply under this subpart?
80.615–80.619 [Reserved]

PROVISIONS FOR FOREIGN REFINERS AND IMPORTERS FOR MOTOR VEHICLE DIESEL FUEL SUBJECT TO A TEMPORARY COMPLIANCE OPTION OR HARDSHIP PROVISION

80.620 What are the additional requirements for motor vehicle diesel fuel produced by foreign refineries subject to a temporary refiner compliance option or hardship provisions?

Subpart J—Gasoline Toxics

GENERAL INFORMATION

80.800–80.805 [Reserved]
80.810 Who shall register with EPA under the gasoline toxics program?

GASOLINE TOXICS PERFORMANCE REQUIREMENTS

80.815 What are the gasoline toxics performance requirements for refiners and importers?
80.820 What gasoline is subject to the toxics performance requirements of this subpart?
80.825 How is the refinery or importer annual average toxics value determined?
80.830 What requirements apply to oxygenate blenders?
80.835 What requirements apply to butane blenders?
80.840 [Reserved]
80.845 What requirements apply to California gasoline?
80.850 How is the compliance baseline determined?
80.855 What is the compliance baseline for refineries or importers with insufficient data?
80.860–80.905 [Reserved]

BASELINE DETERMINATION

80.910 How does a refiner or importer apply for a toxics baseline?
80.915 How are the baseline toxics value and the baseline toxics volume determined?
80.920–80.980 [Reserved]

RECORDKEEPING AND REPORTING REQUIREMENTS

80.985 What records shall be kept?
80.990 What are the toxics reporting requirements?

EXEMPTIONS

80.995 What if a refiner or importer is unable to produce gasoline conforming to the requirements of this subpart?
80.1000 What are the requirements for obtaining an exemption for gasoline used for research, development or testing purposes?

VIOLATION PROVISIONS

80.1005 What acts are prohibited under the gasoline toxics program?
80.1010 [Reserved]
80.1015 Who is liable for violations under the gasoline toxics program?
80.1020 [Reserved]
80.1025 What penalties apply under this subpart?

PROVISIONS FOR FOREIGN REFINERS WITH INDIVIDUAL TOXICS BASELINES

80.1030 What are the requirements for gasoline produced at foreign refineries having individual refiner toxics baselines?

ATTEST ENGAGEMENTS

80.1035 What are the attest engagement requirements for gasoline toxics compliance applicable to refiners and importers?
80.1040 [Reserved]

ADDITIONAL RULEMAKING

80.1045 What additional rulemaking will EPA conduct?

APPENDIX A TO PART 80—TEST FOR THE DETERMINATION OF PHOSPHORUS IN GASOLINE
APPENDIX B TO PART 80—TEST METHODS FOR LEAD IN GASOLINE
APPENDIX C TO PART 80—[RESERVED]
APPENDIX D TO PART 80—SAMPLING PROCEDURES FOR FUEL VOLATILITY
APPENDIX E TO PART 80—TEST FOR DETERMINING REID VAPOR PRESSURE (RVP) OF GASOLINE AND GASOLINE OXYGENATE BLENDS
APPENDIX F TO PART 80—TEST FOR DETERMINING THE QUANTITY OF ALCOHOL IN GASOLINE
APPENDIX G TO PART 80—SAMPLING PROCEDURES FOR DIESEL FUEL

AUTHORITY: 42 U.S.C. 7414, 7521(l), 7545 and 7601(a).

SOURCE: 38 FR 1255, Jan. 10, 1973, unless otherwise noted.

EFFECTIVE DATE NOTE: At 59 FR 7716, Feb. 16, 1994, EPA published amendments to part 80 containing information collection requirements. These amendments will not become effective until approval has been given by the Office of Management and Budget (OMB).

Subpart A—General Provisions

§ 80.1 Scope.

(a) This part prescribes regulations for the control and/or prohibition of fuels and additives for use in motor vehicles and motor vehicle engines. These regulations are based upon a determination by the Administrator that the emission product of a fuel or additive will endanger the public health, or will impair to a significant degree the performance of a motor vehicle emission control device in general use or which the Administrator finds has been developed to a point where in a reasonable time it would be in general use were such regulations promulgated; and certain other findings specified by the Act.

(b) Nothing in this part is intended to preempt the ability of State or local governments to control or prohibit any fuel or additive for use in motor vehicles and motor vehicle engines which is not explicitly regulated by this part.

[38 FR 1255, Jan. 10, 1973, as amended at 38 FR 33741, Dec. 6, 1973; 42 FR 25732, May 19, 1977]

§ 80.2 Definitions.

As used in this part:

(a) *Act* means the Clean Air Act, as amended (42 U.S.C. 1857 *et seq.*).

(b) *Administrator* means the Administrator of the Environmental Protection Agency.

(c) *Gasoline* means any fuel sold in any State[1] for use in motor vehicles and motor vehicle engines, and commonly or commercially known or sold as gasoline.

(d) *Previously certified gasoline*, or PCG, means gasoline or RBOB that previously has been included in a batch for purposes of complying with the standards in Subparts D, E, H, and J of this part, as appropriate.

(e) *Lead additive* means any substance containing lead or lead compounds.

(f) [Reserved]

(g) *Unleaded gasoline* means gasoline which is produced without the use of any lead additive and which contains

[1] *State* means a State, the District of Columbia, the Commonwealth of Puerto Rico, the Virgin Islands, Guam, and American Samoa.

not more than 0.05 gram of lead per gallon and not more than 0.005 gram of phosphorus per gallon.

(h) *Refinery* means any facility, including but not limited to, a plant, tanker truck, or vessel where gasoline or diesel fuel is produced, including any facility at which blendstocks are combined to produce gasoline or diesel fuel, or at which blendstock is added to gasoline or diesel fuel.

(i) *Refiner* means any person who owns, leases, operates, controls, or supervises a refinery.

(j) *Retail outlet* means any establishment at which gasoline, diesel fuel, methanol, natural gas or liquefied petroleum gas is sold or offered for sale for use in motor vehicles.

(k) *Retailer* means any person who owns, leases, operates, controls, or supervises a retail outlet.

(l) *Distributor* means any person who transports or stores or causes the transportation or storage of gasoline or diesel fuel at any point between any gasoline or diesel fuel refinery or importer's facility and any retail outlet or wholesale purchaser-consumer's facility.

(m) *Lead additive manufacturer* means any person who produces a lead additive or sells a lead additive under his own name.

(n) *Reseller* means any person who purchases gasoline or diesel fuel identified by the corporate, trade, or brand name of a refiner from such refiner or a distributor and resells or transfers it to retailers or wholesale purchaser-consumers displaying the refiner's brand, and whose assets or facilities are not substantially owned, leased, or controlled by such refiner.

(o) *Wholesale purchaser-consumer* means any organization that is an ultimate consumer of gasoline, diesel fuel, methanol, natural gas or liquefied petroleum gas and which purchases or obtains gasoline, diesel fuel, natural gas or liquefied petroleum gas from a supplier for use in motor vehicles and, in the case of gasoline, diesel fuel, methanol or liquefied petroleum gas, receives delivery of that product into a storage tank of at least 550-gallon capacity substantially under the control of that organization.

(p)–(q) [Reserved]

(r) *Importer* means a person who imports gasoline, gasoline blending stocks or components, or diesel fuel from a foreign country into the United States (including the Commonwealth of Puerto Rico, the Virgin Islands, Guam, American Samoa, and the Northern Mariana Islands).

(s) *Gasoline blending stock, blendstock, or component* means any liquid compound which is blended with other liquid compounds to produce gasoline.

(t) *Carrier* means any distributor who transports or stores or causes the transportation or storage of gasoline or diesel fuel without taking title to or otherwise having any ownership of the gasoline or diesel fuel, and without altering either the quality or quantity of the gasoline or diesel fuel.

(u) *Ethanol blending plant* means any refinery at which gasoline is produced solely through the addition of ethanol to gasoline, and at which the quality or quantity of gasoline is not altered in any other manner.

(v) *Ethanol blender* means any person who owns, leases, operates, controls, or supervises an ethanol blending plant.

(w) *Cetane index* or *''Calculated cetane index''* is a number representing the ignition properties of diesel fuel oils from API gravity and mid-boiling point as determined by ASTM standard method D 976–80, entitled ''Standard Methods for Calculated Cetane Index of Distillate Fuels''. ASTM test method D 976–80 is incorporated by reference. This incorporation by reference was approved by the Director of the Federal Register in accordance with 5 U.S.C. 552(a) and 1 CFR part 51. A copy may be obtained from the American Society for Testing and Materials, 1916 Race Street, Philadelphia, PA 19103. A copy may be inspected at the Air Docket Section (A–130), Room M–1500, U.S. Environmental Protection Agency, Docket No. A–86–03, 401 M Street SW., Washington, DC 20460 or at the Office of the Federal Register, 800 North Capitol Street, NW., suite 700, Washington, DC.

(x) *Diesel fuel* means any fuel sold in any state or Territory of the United States and suitable for use in diesel motor vehicles, diesel motor vehicle engines or diesel nonroad engines, and which is commonly or commercially known or sold as diesel fuel.

(y) *Motor vehicle diesel fuel* means any diesel fuel, or any distillate product, that is used, intended for use, or made available for use, as a fuel in diesel motor vehicles or diesel motor vehicle engines.

(z) *Aromatic content* is the aromatic hydrocarbon content in volume percent as determined by ASTM standard test method D 1319–88, entitled ''Standard Test Method for Hydrocarbon Types in Liquid Petroleum Products by Fluorescent Indicator Adsorption''. ASTM test method D 1319–88 is incorporated by reference. This incorporation by reference was approved by the Director of the Federal Register in accordance with 5 U.S.C. 552(a) and 1 CFR part 51. A copy may be obtained from the American Society for Testing and Materials, 1916 Race Street, Philadelphia, PA 19103. A copy may be inspected at the Air Docket Section (A–130), room M–1500, U.S. Environmental Protection Agency, Docket No. A–86–03, 401 M Street SW., Washington, DC 20460 or at the Office of the Federal Register, 800 North Capitol Street, NW., suite 700, Washington, DC.

(aa) [Reserved]

(bb) *Sulfur percentage* is the percentage of sulfur in diesel fuel by weight, as determined using the applicable sampling and testing methodologies set forth in § 80.580.

(cc) *Designated Volatility Nonattainment Area* means any area designated as being in nonattainment with the National Ambient Air Quality Standard for ozone pursuant to rulemaking under section 107(d)(4)(A)(ii) of the Clean Air Act.

(dd) *Designated Volatility Attainment Area* means an area not designated as being in nonattainment with the National Ambient Air Quality Standard for ozone pursuant to rulemaking under section 107(d)(4)(A)(ii) of the Clean Air Act.

(ee) *Reformulated gasoline* means any gasoline whose formulation has been certified under § 80.40, which meets each of the standards and requirements prescribed under § 80.41, and which contains less than the maximum concentration of the marker specified in § 80.82 that is allowed for reformulated gasoline under § 80.82.

(ff) *Conventional gasoline* means any gasoline which has not been certified under § 80.40.

(gg) *Batch of gasoline* means a quantity of gasoline that is homogeneous with regard to those properties that are specified for conventional or reformulated gasoline.

(hh) *Covered area* means each of the geographic areas specified in § 80.70 in which only reformulated gasoline may be sold or dispensed to ultimate consumers.

(ii) *Reformulated gasoline credit* means the unit of measure for the paper transfer of oxygen or benzene content resulting from reformulated gasoline which contains more than 2.1 weight percent of oxygen or less than 0.95 volume percent benzene.

(jj) *Oxygenate* means any substance which, when added to gasoline, increases the oxygen content of that gasoline. Lawful use of any of the substances or any combination of these substances requires that they be ''substantially similar'' under section 211(f)(1) of the Clean Air Act, or be permitted under a waiver granted by the Administrator under the authority of section 211(f)(4) of the Clean Air Act.

(kk) *Reformulated gasoline blendstock for oxygenate blending, or RBOB* means a petroleum product which, when blended with a specified type and percentage of oxygenate, meets the definition of reformulated gasoline, and to which the specified type and percentage of oxygenate is added other than by the refiner or importer of the RBOB at the refinery or import facility where the RBOB is produced or imported.

(ll) *Oxygenate blending facility* means any facility (including a truck) at which oxygenate is added to gasoline or blendstock, and at which the quality or quantity of gasoline is not altered in any other manner except for the addition of deposit control additives.

(mm) *Oxygenate blender* means any person who owns, leases, operates, controls, or supervises an oxygenate blending facility, or who owns or controls the blendstock or gasoline used or the gasoline produced at an oxygenate blending facility.

(nn) *Batch of motor vehicle diesel fuel* means a quantity of diesel fuel which is homogeneous with regard to those

properties that are specified for motor vehicle diesel fuel under subpart I of this part.

(oo) *Liquefied petroleum gas* means a liquid hydrocarbon fuel that is stored under pressure and is composed primarily of species that are gases at atmospheric conditions (temperature = 25 °C and pressure = 1 atm), excluding natural gas.

(pp) *Control area* means a geographic area in which only oxygenated gasoline under the oxygenated gasoline program may be sold or dispensed, with boundaries determined by section 211(m) of the Act.

(qq) *Control period* means the period during which oxygenated gasoline must be sold or dispensed in any control area, pursuant to section 211(m)(2) of the Act.

(rr) *Oxygenated gasoline* means gasoline which contains a measurable amount of oxygenate.

(ss) *Tank truck* means a truck and/or trailer used to transport or cause the transportation of gasoline or diesel fuel, that meets the definition of motor vehicle in section 216(2) of the Act.

(tt) *Natural gas* means a fuel whose primary constituent is methane.

(uu) *Methanol* means any fuel sold for use in motor vehicles and commonly known or commercially sold as methanol or MXX, where XX is the percent methanol (CH_3OH) by volume.

(vv) *Opt-in area*. An area which becomes a covered area under § 80.70 pursuant to section 211(k)(6) of the Clean Air Act.

(ww) [Reserved]

(xx) *Motor vehicle diesel fuel additive* means any substance not composed solely of carbon and/or hydrogen, or of diesel blendstocks, that is added, intended for adding, used, or offered for use in motor vehicle diesel fuel subsequent to the production of diesel fuel by processing crude oil from refinery processing units, or in diesel motor vehicle fuel systems.

(Sec. 211, (Sec. 223, Pub. L. 95-95, 91 Stat. 764, 42 U.S.C. 7545(g)) and sec. 301(a) 42 U.S.C. 7602(a), formerly 42 U.S.C. 1857g(a)) of the Clean Air Act, as amended)

[38 FR 1255, Jan. 10, 1973]

EDITORIAL NOTE: For FEDERAL REGISTER citations affecting § 80.2, see the List of CFR Sections Affected, which appears in the Finding Aids section of the printed volume and on GPO Access.

§ 80.3 Test methods.

The lead and phosphorus content of gasoline shall be determined in accordance with test methods set forth in the appendices to this part.

[47 FR 765, Jan. 7, 1982]

§ 80.4 Right of entry; tests and inspections.

The Administrator or his authorized representative, upon presentation of appropriate credentials, shall have a right to enter upon or through any refinery, retail outlet, wholesale purchaser-consumer facility, or detergent manufacturer facility; or the premises or property of any gasoline or detergent distributor, carrier, or importer; or any place where gasoline or detergent is stored; and shall have the right to make inspections, take samples, obtain information and records, and conduct tests to determine compliance with the requirements of this part.

[61 FR 35356, July 5, 1996]

§ 80.5 Penalties.

Any person who violates these regulations shall be liable to the United States for a civil penalty of not more than the sum of $25,000 for every day of such violation and the amount of economic benefit or savings resulting from the violation. Any violation with respect to a regulation proscribed under section 211(c), (k), (l) or (m) of the Act which establishes a regulatory standard based upon a multi-day averaging period shall constitute a separate day of violation for each and every day in the averaging period. Civil penalties shall be assessed in accordance with section 205(b) and (c) of the Act.

[58 FR 65554, Dec. 15, 1993]

§ 80.7 Requests for information.

(a) When the Administrator, the Regional Administrator, or their delegates have reason to believe that a violation of section 211(c) or section 211(n) of the Act and the regulations thereunder has occurred, they may require any refiner, distributor, wholesale purchaser-consumer, or retailer to report

the following information regarding receipt, transfer, delivery, or sale of gasoline represented to be unleaded gasoline and to allow the reproduction of such information at all reasonable times.

(1) For any bulk shipment of gasoline represented to be unleaded gasoline which is transferred, sold, or delivered within the previous 6 months by a refiner or a distributor to a distributor, wholesale purchaser-consumer or a retail outlet, the refiner or distributor shall maintain and provide the following information as applicable:

(i) Business or corporate name and address of distributors, wholesale purchaser-consumers or retail outlets to which the gasoline has been transferred, sold, or delivered.

(ii) Quantity of gasoline involved.

(iii) Date of delivery.

(iv) Storage location of gasoline prior to transit via delivery vessel (e.g., location of a bulk terminal).

(v) Business or corporate name and address of the person who delivered the gasoline.

(vi) Identification of delivery vessel (e.g., truck number). This information shall be supplied by the person in paragraph (a)(1)(v) of this section who performed the delivery, e.g., common or contract carrier.

(2) For any bulk shipment of gasoline represented to be unleaded gasoline received by a retail outlet or a wholesale-purchaser-consumer facility within the previous 6 months, whether by purchase or otherwise, the retailer or wholesale purchaser-consumer shall maintain accessibility to and provide the following information:

(i) Business or corporate name and address of the distributor.

(ii) Quantity of gasoline received.

(iii) Date of receipt.

(b) Upon request by the Administrator, the Regional Administrator, or their delegates, any retailer shall provide documentation of his annual total sales volume in gallons of gasoline for each retail outlet for each calendar year beginning with 1971.

(c) Any refiner, distributor, wholesale purchaser-consumer, retailer, or importer shall provide such other information as the Administrator or his authorized representative may reasonably require to enable him to determine whether such refiner, distributor, wholesale purchaser-consumer, retailer, or importer has acted or is acting in compliance with sections 211(c) and 211(n) of the Act and the regulations thereunder and shall, upon request of the Administrator or his authorized representative, produce and allow reproduction of any relevant records at all reasonable times. Such information may include but is not limited to records of unleaded gasoline inventory at a wholesale purchaser-consumer facility or a retail outlet, unleaded pump meter readings at a wholesale purchaser-consumer facility or a retail outlet, and receipts providing the date of acquisition of signs, labels, and nozzles required by § 80.22. No person shall be required to furnish information requested under this paragraph if he can establish that such information is not maintained in the normal course of his business.

(Secs. 211, 301, Clean Air Act, as amended (42 U.S.C. 1857f–6c, 1857g))

[40 FR 36336, Aug. 20, 1975, as amended at 42 FR 45307, Sept. 9, 1977; 47 FR 49332, Oct. 29, 1982; 61 FR 3837, Feb. 2, 1996]

Subpart B—Controls and Prohibitions

§§ 80.20–80.21 [Reserved]

§ 80.22 Controls and prohibitions.

(a) After December 31, 1995, no person shall sell, offer for sale, supply, offer for supply, dispense, transport, or introduce into commerce gasoline represented to be unleaded gasoline unless such gasoline meets the defined requirements for unleaded gasoline in § 80.2(g); nor shall he dispense, or cause or allow the gasoline other than unleaded gasoline to be dispensed into any motor vehicle which is equipped with a gasoline tank filler inlet which is designed for the introduction of unleaded gasoline.

(b) After December 31, 1995, no person shall sell, offer for sale, supply, offer for supply, dispense, transport, or introduce into commerce for use as fuel in any motor vehicle (as defined in Section 216(2) of the Clean Air Act, 42 U.S.C. 7550(2)), any gasoline which is produced with the use of lead additives

or which contains more than 0.05 gram of lead per gallon.

(c)–(e) [Reserved]

(f) Beginning January 1, 1996, every retailer and wholesale purchaser-consumer shall equip all gasoline pumps as follows:

(1) [Reserved]

(2) Each pump from which unleaded gasoline is dispensed into motor vehicles shall be equipped with a nozzle spout which meets the following specifications:

(i) The outside diameter of the terminal end shall not be greater than 0.840 inch (2.134 centimeters);

(ii) The terminal end shall have a straight section of at least 2.5 inches (6.34 centimeters) in length; and

(iii) The retaining spring shall terminate 3.0 inches (7.6 centimeters) from the terminal end.

(g)–(i) [Reserved]

(j) After July 1, 1996 every retailer and wholesale purchaser-consumer handling over 10,000 gallons (37,854 liters) of fuel per month shall limit each nozzle from which gasoline or methanol is introduced into motor vehicles to a maximum fuel flow rate not to exceed 10 gallons per minute (37.9 liters per minute). The flow rate may be controlled through any means in the pump/dispenser system, provided the nozzle flow rate does not exceed 10 gallons per minute (37.9 liters per minute). After January 1, 1998 this requirement applies to every retailer and wholesale purchaser-consumer. Any dispensing pump that is dedicated exclusively to heavy-duty vehicles, boats, or airplanes is exempt from this requirement.

[38 FR 1255, Jan. 10, 1973, as amended at 39 FR 16125, May 17, 1974; 39 FR 43283, Dec. 12, 1974; 48 FR 4287, Jan. 31, 1983; 56 FR 13768, Apr. 4, 1991; 58 FR 16019, Mar. 24, 1993; 61 FR 3837, Feb. 2, 1996; 61 FR 33039, June 26, 1996]

§ 80.23 Liability for violations.

Liability for violations of paragraphs (a) and (b) of § 80.22 shall be determined as follows:

(a)(1) Where the corporate, trade, or brand name of a gasoline refiner or any of its marketing subsidiaries appears on the pump stand or is displayed at the retail outlet or wholesale purchaser-consumer facility from which the gasoline was sold, dispensed, or offered for sale, the retailer or wholesale purchaser-consumer, the reseller (if any), and such gasoline refiner shall be deemed in violation. Except as provided in paragraph (b)(2) of this section, the refiner shall be deemed in violation irrespective of whether any other refiner, distributor, retailer, or wholesale purchaser-consumer or the employee or agent of any refiner, distributor, retailer, or wholesale purchaser-consumer may have caused or permitted the violation.

(2) Where the corporate, trade, or brand name of a gasoline refiner or any of its marketing subsidiaries does not appear on the pump stand and is not displayed at the retail outlet or wholesale purchaser-consumer facility from which the gasoline was sold, dispensed, or offered for sale, the retailer or wholesale purchaser-consumer and any distributor who sold that person gasoline contained in the storage tank which supplied that pump at the time of the violation shall be deemed in violation.

(b)(1) In any case in which a retailer or wholesale purchaser-consumer and any gasoline refiner or distributor would be in violation under paragraph (a) (1) or (2) of this section, the retailer or wholesale purchaser-consumer shall not be liable if he can demonstrate that the violation was not caused by him or his employee or agent.

(2) In any case in which a retailer or wholesale purchaser-consumer, a reseller (if any), and any gasoline refiner would be in violation under paragraph (a)(1) of this section, the refiner shall not be deemed in violation if he can demonstrate:

(i) That the violation was not caused by him or his employee or agent, and

(ii) That the violation was caused by an act in violation of law (other than the Act or this part), or an act of sabotage, vandalism, or deliberate commingling of gasoline which is produced with the use of lead additives or phosphorus additives with unleaded gasoline, whether or not such acts are violations of law in the jurisdiction where the violation of the requirements of this part occurred, or

(iii) That the violation was caused by the action of a reseller or a retailer

supplied by such reseller, in violation of a contractual undertaking imposed by the refiner on such reseller designed to prevent such action, and despite reasonable efforts by the refiner (such as periodic sampling) to insure compliance with such contractual obligation, or

(iv) That the violation was caused by the action of a retailer who is supplied directly by the refiner (and not by a reseller), in violation of a contractual undertaking imposed by the refiner on such retailer designed to prevent such action, and despite reasonable efforts by the refiner (such as periodic sampling) to insure compliance with such contractual obligation, or

(v) That the violation was caused by the action of a distributor subject to a contract with the refiner for transportation of gasoline from a terminal to a distributor, retailer or wholesale purchaser-consumer, in violation of a contractual undertaking imposed by the refiner on such distributor designed to prevent such action, and despite reasonable efforts by the refiner (such as periodic sampling) to insure compliance with such contractual obligation, or

(vi) That the violation was caused by a distributor (such as a common carrier) not subject to a contract with the refiner but engaged by him for transportation of gasoline from a terminal to a distributor, retailer or wholesale purchaser-consumer, despite reasonable efforts by the refiner (such as specification or inspection of equipment) to prevent such action, or

(vii) That the violation occurred at a wholesale purchaser-consumer facility: *Provided, however,* That if such wholesale purchaser-consumer was supplied by a reseller, the refiner must demonstrate that the violation could not have been prevented by such reseller's compliance with a contractual undertaking imposed by the refiner on such reseller as provided in paragraph (b)(2)(iii) of this section.

(viii) In paragraphs (b)(2)(ii) through (vi) hereof, the term ''was caused'' means that the refiner must demonstrate by reasonably specific showings by direct or circumstantial evidence that the violation was caused or must have been caused by another.

(c) In any case in which a retailer or wholesale purchaser-consumer, a reseller, and any gasoline refiner would be in violation under paragraph (a)(1) of this section, the reseller shall not be deemed in violation if he can demonstrate that the violation was not caused by him or his employee or agent.

(d) In any case in which a retailer or wholesale purchaser-consumer and any gasoline distributor would be in violation under paragraph (a)(2) of this section, the distributor will not be deemed in violation if he can demonstrate that the violation was not caused by him or his employee or agent.

(e)(1) In any case in which a retailer or his employee or agent or a wholesale purchase-consumer or his employee or agent introduced gasoline other than unleaded gasoline into a motor vehicle which is equipped with a gasoline tank filler inlet designed for the introduction of unleaded gasoline, only the retailer or wholesale purchaser-consumer shall be deemed in violation.

(2) [Reserved]

(Secs. 211, 301 of the Clean Air Act, as amended (42 U.S.C. 1857f–6c, 1857g))

[38 FR 1255, Jan. 10, 1973, as amended at 39 FR 42360, Dec. 5, 1974; 39 FR 43284, Dec. 12, 1974; 42 FR 45307, Sept. 9, 1977; 61 FR 3837, Feb. 2, 1996]

§ 80.24 Controls applicable to motor vehicle manufacturers.

(a) [Reserved]

(b) The manufacturer of any motor vehicle equipped with an emission control device which the Administrator has determined will be significantly impaired by the use of gasoline other than unleaded gasoline shall manufacture such vehicle with each gasoline tank filler inlet having a restriction which prevents the insertion of a nozzle with a spout having a terminal end with an outside diameter of 0.930 inch (2.363 centimeters) or more and allows the insertion of a nozzle with a spout meeting the specifications of § 80.22(f)(2).

[38 FR 26450, Sept. 21, 1973, as amended at 39 FR 34538, Sept. 26, 1974; 46 FR 50472, Oct. 13, 1981; 48 FR 29692, June 28, 1983; 51 FR 33731, Sept. 22, 1986; 61 FR 3838, Feb. 2, 1996; 61 FR 8221, Mar. 4, 1996; 61 FR 28766, June 6, 1996]

§ 80.25 [Reserved]

§ 80.26 Confidentiality of information.

Information obtained by the Administrator or his representatives pursuant to this part shall be treated, in so far as its confidentiality is concerned, in accordance with the provisions of 40 CFR part 2.

[38 FR 33741, Dec. 6, 1973]

§ 80.27 Controls and prohibitions on gasoline volatility.

(a)(1) *Prohibited activities in 1991*. During the 1991 regulatory control periods, no refiner, importer, distributor, reseller, carrier, retailer or wholesale purchaser-consumer shall sell, offer for sale, dispense, supply, offer for supply, or transport gasoline whose Reid vapor pressure exceeds the applicable standard. As used in this section and § 80.28, ''applicable standard'' means the standard listed in this paragraph for the geographical area and time period in which the gasoline is intended to be dispensed to motor vehicles or, if such area and time period cannot be determined, the standard listed in this paragraph that specifies the lowest Reid vapor pressure for the year in which the gasoline is being sampled. As used in this section and § 80.28, ''regulatory control periods'' mean June 1 to September 15 for retail outlets and wholesale purchaser-consumers and May 1 to September 15 for all other facilities.

APPLICABLE STANDARDS [1]

State	May	June	July	Aug.	Sept.
Alabama	10.5	10.5	9.5	9.5	10.5
Arizona:					
North of 34 degrees latitude and east of 111 degrees longitude	9.5	9.0	9.0	9.5	9.5
All areas except North of 34 degrees latitude and east of 111 degrees longitude	9.5	9.0	9.0	9.0	9.5
Arkansas	10.5	10.5	9.5	9.5	10.5
California: [2]					
North Coast	10.5	9.5	9.5	9.5	9.5
South Coast	9.5	9.5	9.5	9.5	9.5
Southeast	9.5	9.5	9.5	9.5	9.5
Interior	9.5	9.5	9.5	9.5	9.5
Colorado	10.5	9.5	9.5	9.5	9.5
Connecticut	10.5	10.5	10.5	10.5	10.5
Delaware	10.5	10.5	10.5	10.5	10.5
District of Columbia	10.5	10.5	10.5	10.5	10.5
Florida	10.5	10.5	10.5	10.5	10.5
Georgia	10.5	10.5	9.5	9.5	10.5
Idaho	10.5	10.5	10.5	10.5	10.5
Illinois:					
North of 40° Latitude	10.5	10.5	10.5	10.5	10.5
South of 40° Latitude	10.5	10.5	9.5	9.5	10.5
Indiana	10.5	10.5	10.5	10.5	10.5
Iowa	10.5	10.5	10.5	10.5	10.5
Kansas	10.5	10.5	9.5	9.5	10.5
Kentucky	10.5	10.5	10.5	10.5	10.5
Louisiana	10.5	10.5	9.5	9.5	10.5
Maine	10.5	10.5	10.5	10.5	10.5
Maryland	10.5	10.5	10.5	10.5	10.5
Massachusetts	10.5	10.5	10.5	10.5	10.5
Michigan	10.5	10.5	10.5	10.5	10.5
Minnesota	10.5	10.5	10.5	10.5	10.5
Mississippi	10.5	10.5	9.5	9.5	10.5
Missouri	10.5	10.5	9.5	9.5	10.5
Montana	10.5	10.5	10.5	10.5	10.5
Nebraska	10.5	10.5	10.5	10.5	10.5
Nevada:					
North of 38° Latitude	10.5	9.5	9.5	9.5	9.5
South of 38° Latitude	9.5	9.5	9.5	9.5	9.5
New Hampshire	10.5	10.5	10.5	10.5	10.5
New Jersey	10.5	10.5	10.5	10.5	10.5
New Mexico:					
North of 34° Latitude	9.5	9.0	9.0	9.5	9.5
South of 34° Latitude	9.5	9.0	9.0	9.0	9.5
New York	10.5	10.5	10.5	10.5	10.5
North Carolina	10.5	10.5	9.5	9.5	10.5
North Dakota	10.5	10.5	10.5	10.5	10.5

APPLICABLE STANDARDS [1]—Continued

State	May	June	July	Aug.	Sept.
Ohio	10.5	10.5	10.5	10.5	10.5
Oklahoma	10.5	9.5	9.5	9.5	9.5
Oregon:					
East of 122° Longitude	10.5	10.5	10.5	10.5	10.5
West of 122° Longitude	10.5	10.5	10.5	10.5	10.5
Pennsylvania	10.5	10.5	10.5	10.5	10.5
Rhode Island	10.5	10.5	10.5	10.5	10.5
South Carolina	10.5	10.5	9.5	9.5	10.5
South Dakota	10.5	10.5	10.5	10.5	10.5
Tennessee	10.5	10.5	9.5	9.5	10.5
Texas:					
East of 99° Longitude	9.5	9.0	9.0	9.0	9.5
West of 99° Longitude	9.5	9.0	9.0	9.0	9.5
Utah	10.5	9.5	9.5	9.5	9.5
Vermont	10.5	10.5	10.5	10.5	10.5
Virginia	10.5	10.5	10.5	10.5	10.5
Washington:					
East of 122° Longitude	10.5	10.5	10.5	10.5	10.5
West of 122° Longitude	10.5	10.5	10.5	10.5	10.5
West Virginia	10.5	10.5	10.5	10.5	10.5
Wisconsin	10.5	10.5	10.5	10.5	10.5
Wyoming	10.5	10.5	10.5	10.5	10.5

[1] Standards are expressed in pounds per square inch (psi).
[2] California areas include the following counties:
North Coast—Alameda, Contra Costa, Del Norte, Humbolt, Lake, Marin, Mendocino, Monterey, Napa, San Benito, San Francisco, San Mateo, Santa Clara, Santa Cruz, Solano, Sonoma, and Trinity.
Interior—Lassen, Modoc, Plumas, Sierra, Siskiyou, Alpine, Amador, Butte, Calaveras, Colusa, El Dorado, Fresno, Glenn, Kern (except that portion lying east of the Los Angeles County Aqueduct), Kings, Madera, Mariposa, Merced, Placer, Sacramento, San Joaquin, Shasta, Stanislaus, Sutter, Tehama, Tulare, Tuolumne, Yolo, Yuba, and Nevada.
South Coast—Orange, San Diego, San Luis Obispo, Santa Barbara, Ventura, and Los Angeles (except that portion north of the San Gabriel mountain range and east of the Los Angeles County Aqueduct).
Southeast—Imperial, Riverside, San Bernardino, Los Angeles (that portion north of the San Gabriel mountain range and east of the Los Angeles County Aqueduct), Mono, Inyo, and Kern (that portion lying east of the Los Angeles County Aqueduct).

(2) *Prohibited activities in 1992 and beyond.* During the 1992 and later high ozone seasons no person, including without limitation, no retailer or wholesale purchaser-consumer, and during the 1992 and later regulatory control periods, no refiner, importer, distributor, reseller, or carrier shall sell, offer for sale, dispense, supply, offer for supply, transport or introduce into commerce gasoline whose Reid vapor pressure exceeds the applicable standard. As used in this section and § 80.28, ''applicable standard'' means:

(i) 9.0 psi for all designated volatility attainment areas; and

(ii) The standard listed in this paragraph for the state and time period in which the gasoline is intended to be dispensed to motor vehicles for any designated volatility nonattainment area within such State or, if such area and time period cannot be determined, the standard listed in this paragraph that specifies the lowest Reid vapor pressure for the year in which the gasoline is sampled. Designated volatility attainment and designated volatility nonattainment areas and their exact boundaries are described in 40 CFR part 81, or such part as shall later be designated for that purpose. As used in this section and § 80.27, ''high ozone season'' means the period from June 1 to September 15 of any calendar year and ''regulatory control period'' means the period from May 1 to September 15 of any calendar year.

APPLICABLE STANDARDS [1] 1992 AND SUBSEQUENT YEARS

State	May	June	July	August	September
Alabama	9.0	7.8	7.8	7.8	7.8
Arizona	9.0	7.8	7.8	7.8	7.8
Arkansas	9.0	7.8	7.8	7.8	7.8
California	9.0	7.8	7.8	7.8	7.8
Colorado [2]	9.0	7.8	7.8	7.8	7.8
Connecticut	9.0	9.0	9.0	9.0	9.0
Delaware	9.0	9.0	9.0	9.0	9.0

APPLICABLE STANDARDS[1] 1992 AND SUBSEQUENT YEARS—Continued

State	May	June	July	August	September
District of Columbia	9.0	7.8	7.8	7.8	7.8
Florida	9.0	7.8	7.8	7.8	7.8
Georgia	9.0	7.8	7.8	7.8	7.8
Idaho	9.0	9.0	9.0	9.0	9.0
Illinois	9.0	9.0	9.0	9.0	9.0
Indiana	9.0	9.0	9.0	9.0	9.0
Iowa	9.0	9.0	9.0	9.0	9.0
Kansas	9.0	7.8	7.8	7.8	7.8
Kentucky	9.0	9.0	9.0	9.0	9.0
Louisiana	9.0	7.8	7.8	7.8	7.8
Maine	9.0	9.0	9.0	9.0	9.0
Maryland	9.0	7.8	7.8	7.8	7.8
Massachusetts	9.0	9.0	9.0	9.0	9.0
Michigan	9.0	9.0	9.0	9.0	9.0
Minnesota	9.0	9.0	9.0	9.0	9.0
Mississippi	9.0	7.8	7.8	7.8	7.8
Missouri	9.0	7.8	7.8	7.8	7.8
Montana	9.0	9.0	9.0	9.0	9.0
Nebraska	9.0	9.0	9.0	9.0	9.0
Nevada	9.0	7.8	7.8	7.8	7.8
New Hampshire	9.0	9.0	9.0	9.0	9.0
New Jersey	9.0	9.0	9.0	9.0	9.0
New Mexico	9.0	7.8	7.8	7.8	7.8
New York	9.0	9.0	9.0	9.0	9.0
North Carolina	9.0	7.8	7.8	7.8	7.8
North Dakota	9.0	9.0	9.0	9.0	9.0
Ohio	9.0	9.0	9.0	9.0	9.0
Oklahoma	9.0	7.8	7.8	7.8	7.8
Oregon	9.0	7.8	7.8	7.8	7.8
Pennsylvania	9.0	9.0	9.0	9.0	9.0
Rhode Island	9.0	9.0	9.0	9.0	9.0
South Carolina[3]	9.0	9.0	9.0	9.0	9.0
South Dakota	9.0	9.0	9.0	9.0	9.0
Tennessee:.					
Knox County	9.0	9.0	9.0	9.0	9.0
All other volatility nonattainment areas	9.0	7.8	7.8	7.8	7.8
Texas	9.0	7.8	7.8	7.8	7.8
Utah	9.0	7.8	7.8	7.8	7.8
Vermont	9.0	9.0	9.0	9.0	9.0
Virginia	9.0	7.8	7.8	7.8	7.8
Washington	9.0	9.0	9.0	9.0	9.0
West Virginia	9.0	9.0	9.0	9.0	9.0
Wisconsin	9.0	9.0	9.0	9.0	9.0
Wyoming	9.0	9.0	9.0	9.0	9.0

[1] Standards are expressed in pounds per square inch (psi).
[2] The standard for 1992 through 2001 in the Denver-Boulder area designated nonattainment for the 1-hour ozone NAAQS in 1991 (see 40 CFR 81.306) will be 9.0 for June 1 through September 15.
[3] The standard for nonattainment areas in South Carolina from June 1 until September 15 in 1992 and 1993 was 7.8 psi.

(b) *Determination of compliance.* Compliance with the standards listed in paragraph (a) of this section shall be determined by use of one of the sampling methodologies as specified in appendix D of this part and the testing methodology specified in appendix E of this part.

(c) *Liability.* Liability for violations of paragraph (a) of this section shall be determined according to the provisions of § 80.28. Where the terms refiner, importer, distributor, reseller, carrier, ethanol blender, retailer, or wholesale purchaser-consumer are expressed in the singular in § 80.28, these terms shall include the plural.

(d) *Special provisions for alcohol blends.* (1) Any gasoline which meets the requirements of paragraph (d)(2) of this section shall not be in violation of this section if its Reid vapor pressure does not exceed the applicable standard in paragraph (a) of this section by more than one pound per square inch (1.0 psi).

(2) In order to qualify for the special regulatory treatment specified in paragraph (d)(1) of this section, gasoline must contain denatured, anhydrous

ethanol. The concentration of the ethanol, excluding the required denaturing agent, must be at least 9% and no more than 10% (by volume) of the gasoline. The ethanol content of the gasoline shall be determined by use of one of the testing methodologies specified in appendix F to this part. The maximum ethanol content of gasoline shall not exceed any applicable waiver conditions under section 211(f)(4) of the Clean Air Act.

(3) Each invoice, loading ticket, bill of lading, delivery ticket and other document which accompanies a shipment of gasoline containing ethanol shall contain a legible and conspicuous statement that the gasoline being shipped contains ethanol and the percentage concentration of ethanol.

(e) *Testing exemptions.* (1)(i) Any person may request a testing exemption by submitting an application that includes all the information listed in paragraphs (e)(3), (4), (5) and (6) of this section to:

Director (6406J), Field Operations and Support Division, U.S. Environmental Protection Agency, 1200 Pennsylvania Ave., NW., Washington, DC 20460

(ii) For purposes of this section, ''testing exemption'' means an exemption from the requirements of § 80.27(a) that is granted by the Administrator for the purpose of research or emissions certification.

(2)(i) In order for a testing exemption to be granted, the applicant must demonstrate the following:

(A) The proposed test program has a purpose that constitutes an appropriate basis for exemption;

(B) The proposed test program necessitates the granting of an exemption;

(C) The proposed test program exhibits reasonableness in scope; and

(D) The proposed test program exhibits a degree of control consistent with the purpose of the program and the Environmental Protection Agency's (EPA's) monitoring requirements.

(ii) Paragraphs (e)(3), (4), (5) and (6) of this section describe what constitutes a sufficient demonstration for each of the four elements in paragraphs (e)(2)(i) (A) through (D) of this section.

(3) An appropriate purpose is limited to research or emissions certification. The testing exemption application must include a concise statement of the purpose(s) of the testing program.

(4) With respect to the necessity that an exemption be granted, the applicant must demonstrate an inability to achieve the stated purpose in a practicable manner, during a period of the year in which the volatility regulations do not apply, or without performing or causing to be performed one or more of the prohibited activities under § 80.27(a). If any site of the proposed test program is located in an area that has been classified by the Administrator as a nonattainment area for purposes of the ozone national ambient air quality standard, the application must also demonstrate an inability to perform the test program in an area that is not so classified.

(5) With respect to reasonableness, a test program must exhibit a duration of reasonable length, effect a reasonable number of vehicles or engines, and utilize a reasonable amount of high volatility fuel. In this regard, the testing exemption application must include:

(i) An estimate of the program's duration;

(ii) An estimate of the maximum number of vehicles or engines involved in the test program;

(iii) The time or mileage duration of the test program;

(iv) The range of volatility of the fuel (expressed in Reid Vapor Pressure (RVP)) expected to be used in the test program; and

(v) The quantity of fuel which exceeds the applicable standard that is expected to be used in the test program.

(6) With respect to control, a test program must be capable of affording EPA a monitoring capability. At a minimum, the testing exemption application must also include:

(i) The technical nature of the test program;

(ii) The site(s) of the test program (including the street address, city, county, State, and zip code);

(iii) The manner in which information on vehicles and engines used in the test program will be recorded and made available to the Administrator;

(iv) The manner in which results of the test program will be recorded and made available to the Administrator;

(v) The manner in which information on the fuel used in the test program (including RVP level(s), name, address, telephone number, and contact person of supplier, quantity, date received from the supplier) will be recorded and made available to the Administrator;

(vi) The manner in which the distribution pumps will be labeled to insure proper use of the test fuel;

(vii) The name, address, telephone number and title of the person(s) in the organization requesting a testing exemption from whom further information on the request may be obtained; and

(viii) The name, address, telephone number and title of the person(s) in the organization requesting a testing exemption who will be responsible for recording and making available to the Administrator the information specified in paragraphs (e)(6)(iii), (iv), and (v) of this section, and the location in which such information will be maintained.

(7) A testing exemption will be granted by the Administrator upon a demonstration that the requirements of paragraphs (e)(2), (3), (4), (5) and (6) of this section have been met. The testing exemption will be granted in the form of a memorandum of exemption signed by the applicant and the Administrator (or his delegate), which shall include such terms and conditions as the Administrator determines necessary to monitor the exemption and to carry out the purposes of this section. Any violation of such a term or condition shall cause the exemption to be void.

[54 FR 11883, Mar. 22, 1989; 54 FR 27017, June 27, 1989, as amended at 54 FR 33219, Aug. 14, 1989; 55 FR 32666, June 11, 1990; 56 FR 20548, May 6, 1991; 56 FR 37022, Aug. 2, 1991; 56 FR 64710, Dec. 12, 1991; 57 FR 20205, May 12, 1992; 58 FR 34370, June 25, 1993; 58 FR 14484, Mar. 17, 1993; 58 FR 26069, Apr. 30, 1993; 58 FR 46511, Sept. 1, 1993; 59 FR 15629, 15633, Apr. 4, 1994; 61 FR 16396, Apr. 15, 1996; 63 FR 31631, June 10, 1998]

EFFECTIVE DATE NOTE: At 66 FR 28812, May 24, 2001, § 80.27 was amended in the table in paragraph (a)(2) by revising the entry for Colorado and footnote 2, effective July 23, 2001. For the convenience of the user, the superseded text is set forth as follows.

§ 80.27 Controls and prohibitions on gasoline volatility.

* * * * *

(a) * * *

(2) * * *

APPLICABLE STANDARDS [1] 1992 AND SUBSEQUENT YEARS

State	May	June	July	August	September
Colorado [2]	9.0	7.8	7.8	7.8	7.8

[1] Standards are expressed in pounds per square inch (psi).

[2] The standard for 1992 through 2000 in the Denver-Boulder area designated nonattainment for the 1-hour ozone NAAQS in 1991 (see 40 CFR 81.306) will be 9.0 for June 1 through September 15.

§ 80.28 Liability for violations of gasoline volatility controls and prohibitions.

(a) *Violations at refineries or importer facilities.* Where a violation of the applicable standard set forth in § 80.27 is detected at a refinery that is not an ethanol blending plant or at an importer's facility, the refiner or importer shall be deemed in violation.

(b) *Violations at carrier facilities.* Where a violation of the applicable standard set forth in § 80.27 is detected at a carrier's facility, whether in a transport vehicle, in a storage facility, or elsewhere at the facility, the following parties shall be deemed in violation:

(1) The carrier, except as provided in paragraph (g)(1) of this section;

(2) The refiner (if he is not an ethanol blender) at whose refinery the gasoline was produced or the importer at whose import facility the gasoline was imported, except as provided in paragraph (g)(2) of this section;

(3) The ethanol blender (if any) at whose ethanol blending plant the gasoline was produced, except as provided in paragraph (g)(6) of this section; and

(4) The distributor and/or reseller, except as provided in paragraph (g)(3) of this section.

(c) *Violations at branded distributor facilities, reseller facilities, or ethanol blending plants.* Where a violation of the applicable standard set forth in § 80.27 is detected at a distributor facility, a reseller facility, or an ethanol blending plant which is operating under the corporate, trade, or brand name of a gasoline refiner or any of its marketing subsidiaries, the following parties shall be deemed in violation:

(1) The distributor or reseller, except as provided in paragraph (g)(3) or (g)(8) of this section;

(2) The carrier (if any), if the carrier caused the gasoline to violate the applicable standard;

(3) The refiner under whose corporate, trade, or brand name (or that of any of its marketing subsidiaries) the distributor, reseller, or ethanol blender is operating, except as provided in paragraph (g)(4) of this section; and

(4) The ethanol blender (if any) at whose ethanol blending plant the gasoline was produced, except as provided in paragraph (g)(6) or (g)(8) of this section.

(d) *Violations at unbranded distributor facilities or ethanol blending plants.* Where a violation of the applicable standard set forth in § 80.27 is detected at a distributor facility or an ethanol blending plant not operating under a refiner's corporate, trade, or brand name, or that of any of its marketing subsidiaries, the following parties shall be deemcd in violation:

(1) The distributor, except as provided in paragraph (g)(3) or (g)(8) of this section;

(2) The carrier (if any), if the carrier caused the gasoline to violate the applicable standard;

(3) The refiner (if he is not an ethanol blender) at whose refinery the gasoline was produced or the importer at whose import facility the gasoline was imported, except as provided in paragraph (g)(2) of this section; and

(4) The ethanol blender (if any) at whose ethanol blending plant the gasoline was produced, except as provided in paragraph (g)(6) or (g)(8) of this section.

(e) *Violations at branded retail outlets or wholesale purchaser-consumer facilities.* Where a violation of the applicable standard set forth in § 80.27 is detected at a retail outlet or at a wholesale purchaser-consumer facility displaying the corporate, trade, or brand name of a gasoline refiner or any of its marketing subsidiaries, the following parties shall be deemed in violation:

(1) The retailer or wholesale purchaser-consumer, except as provided in paragraph (g)(5) or (g)(8) of this section;

(2) The distributor and/or reseller (if any), except as provided in paragraph (g)(3) or (g)(8) of this section;

(3) The carrier (if any), if the carrier caused the gasoline to violate the applicable standard;

(4) The refiner whose corporate, trade, or brand name (or that of any of its marketing subsidiaries) is displayed at the retail outlet or wholesale purchaser-consumer facility, except as provided in paragraph (g)(4) of this section; and

(5) The ethanol blender (if any) at whose ethanol blending plant the gasoline was produced, except as provided in paragraph (g)(6) or (g)(8) of this section.

(f) *Violations at unbranded retail outlets or wholesale purchaser-consumer facilities.* Where a violation of the applicable standard set forth in § 80.27 is detected at a retail outlet or at a wholesale purchaser-consumer facility not displaying the corporate, trade, or brand name of a refiner or any of its marketing subsidiaries, the following parties shall be deemed in violation:

(1) The retailer or wholesale purchaser-consumer, except as provided in paragraph (g)(5) or (g)(8) of this section;

(2) The distributor (if any), except as provided in paragraph (g)(3) or (g)(8) of this section;

(3) The carrier (if any), if the carrier caused the gasoline to violate the applicable standard;

(4) The ethanol blender (if any) at whose ethanol blending plant the gasoline was produced, except as provided in paragraph (g)(6) of this section; and

(5) The refiner (if he is not an ethanol blender) at whose refinery the gasoline was produced and/or the importer at whose import facility the gasoline was imported, except as provided in paragraph (g)(2) of this section.

(g) *Defenses.* (1) In any case in which a carrier would be in violation under paragraph (b)(1) of this section, the carrier shall not be deemed in violation if he can demonstrate:

(i) That the violation was not caused by him or his employee or agent; and

(ii) Evidence of an oversight program conducted by the carrier, such as periodic sampling and testing of incoming gasoline, for monitoring the volatility of gasoline stored or transported by that carrier.

(iii) An oversight program under paragraph (g)(1)(ii) of this section need not include periodic sampling and testing of gasoline in a tank truck operated by a common carrier, but in lieu of such tank truck sampling and testing, the common carrier shall demonstrate evidence of an oversight program for monitoring compliance with the volatility requirements of § 80.27 relating to the transport or storage of gasoline by tank truck, such as appropriate guidance to drivers on compliance with applicable requirements and the periodic review of records normally received in the ordinary course of business concerning gasoline quality and delivery.

(2) In any case in which a refiner or importer would be in violation under paragraphs (b)(2), (d)(3), or (f)(5) of this section, the refiner or importer shall not be deemed in violation if he can demonstrate:

(i) That the violation was not caused by him or his employee or agent; and

(ii) Test results using the sampling and testing methodologies set forth in appendices D and E of this part, or any other test method where adequate correlation to Method 3 of appendix E of this part is demonstrated, which show evidence that the gasoline determined to be in violation was in compliance with the applicable standard when it was delivered to the next party in the distribution system.

(3) In any case in which a distributor or reseller would be in violation under paragraph (b)(4), (c)(1), (d)(1), (e)(2), or (f)(2) of this section, the distributor or reseller shall not be deemed in violation if he can demonstrate:

(i) That the violation was not caused by him or his employee or agent; and

(ii) Evidence of an oversight program conducted by the distributor or reseller, such as periodic sampling and testing of gasoline, for monitoring the volatility of gasoline that the distributor or reseller sells, supplies, offers for sale or supply, or transports.

(4) In any case in which a refiner would be in violation under paragraphs (c)(3) or (e)(4) of this section, the refiner shall not be deemed in violation if he can demonstrate all of the following:

(i) Test results using the sampling and testing methodologies set forth in appendices D and E of this part, or any other test method where adequate correlation to Method 3 of appendix E of this part is demonstrated, which show evidence that the gasoline determined to be in violation was in compliance with the applicable standard when transported from the refinery.

(ii) That the violation was not caused by him or his employee or agent; and

(iii) That the violation:

(A) Was caused by an act in violation of law (other than the Act or this part), or an act of sabotage or vandalism, whether or not such acts are violations of law in the jurisdiction where the violation of the requirements of this part occurred, or

(B) Was caused by the action of a reseller, an ethanol blender, or a retailer supplied by such reseller or ethanol blender, in violation of a contractual undertaking imposed by the refiner on such reseller or ethanol blender designed to prevent such action, and despite reasonable efforts by the refiner (such as periodic sampling and testing) to insure compliance with such contractual obligation, or

(C) Was caused by the action of a retailer who is supplied directly by the refiner (and not by a reseller), in violation of a contractual undertaking imposed by the refiner on such retailer designed to prevent such action, and despite reasonable efforts by the refiner (such as periodic sampling and testing) to insure compliance with such contractual obligation, or

(D) Was caused by the action of a distributor or an ethanol blender subject to a contract with the refiner for transportation of gasoline from a terminal

to a distributor, ethanol blender, retailer or wholesale purchaser-consumer, in violation of a contractual undertaking imposed by the refiner on such distributor or ethanol blender designed to prevent such action, and despite reasonable efforts by the refiner (such as periodic sampling and testing) to insure compliance with such contractual obligation, or

(E) Was caused by a carrier or other distributor not subject to a contract with the refiner but engaged by him for transportation of gasoline from a terminal to a distributor, ethanol blender, retailer or wholesale purchaser-consumer, despite reasonable efforts by the refiner (such as specification or inspection of equipment) to prevent such action, or

(F) Occurred at a wholesale purchaser-consumer facility: *Provided, however*, That if such wholesale purchaser-consumer was supplied by a reseller or ethanol blender, the refiner must demonstrate that the violation could not have been prevented by such reseller's or ethanol blender's compliance with a contractual undertaking imposed by the refiner on such reseller or ethanol blender as provided in paragraph (g)(4)(iii)(B) of this section.

(iv) In paragraphs (g)(4)(iii)(A) through (E) of this section, the term ''was caused'' means that the refiner must demonstrate by reasonably specific showings, by direct or circumstantial evidence, that the violation was caused or must have been caused by another.

(5) In any case in which a retailer or wholesale purchaser-consumer would be in violation under paragraphs (e)(1) or (f)(1) of this section, the retailer or wholesale purchaser-consumer shall not be deemed in violation if he can demonstrate that the violation was not caused by him or his employee or agent.

(6) In any case in which an ethanol blender would be in violation under paragraphs (b)(3), (c)(4), (d)(4), (e)(5) or (f)(4) of this section, the ethanol blender shall not be deemed in violation if he can demonstrate:

(i) That the violation was not caused by him or his employee or agent; and

(ii) Evidence of an oversight program conducted by the ethanol blender, such as periodic sampling and testing of gasoline, for monitoring the volatility of gasoline that the ethanol blender sells, supplies, offers for sale or supply or transports; and

(iii) That the gasoline determined to be in violation contained no more than 10% ethanol (by volume) when it was delivered to the next party in the distribution system.

(7) In paragraphs (g)(1)(i), (g)(2)(i), (g)(3)(i), (g)(4)(ii), (g)(5), and (g)(6)(i) of this section, the respective party must demonstrate by reasonably specific showings, by direct or circumstantial evidence, that it or its employee or agent did not cause the violation.

(8) In addition to the defenses provided in paragraphs (g)(1) through (g)(6) of this section, in any case in which an ethanol blender, distributor, reseller, carrier, retailer, or wholesale purchaser-consumer would be in violation under paragraphs (b), (c), (d), (e) or (f), of this section, as a result of gasoline which contains between 9 and 10 percent ethanol (by volume) but exceeds the applicable standard by more than one pound per square inch (1.0 psi), the ethanol blender, distributor, reseller, carrier, retailer or wholesale purchaser-consumer shall not be deemed in violation if such person can demonstrate, by showing receipt of a certification from the facility from which the gasoline was received or other evidence acceptable to the Administrator, that:

(i) The gasoline portion of the blend complies with the Reid vapor pressure limitations of § 80.27(a); and

(ii) The ethanol portion of the blend does not exceed 10 percent (by volume); and

(iii) No additional alcohol or other additive has been added to increase the Reid vapor pressure of the ethanol portion of the blend.

In the case of a violation alleged against an ethanol blender, distributor, reseller, or carrier, if the demonstration required by paragraphs (g)(8)(i), (ii), and (iii) of this section is made by a certification, it must be supported by evidence that the criteria in paragraphs (g)(8)(i), (ii), and (iii) of this section have been met, such as an oversight program conducted by or on behalf of the ethanol blender, distributor,

reseller or carrier alleged to be in violation, which includes periodic sampling and testing of the gasoline or monitoring the volatility and ethanol content of the gasoline. Such certification shall be deemed sufficient evidence of compliance provided it is not contradicted by specific evidence, such as testing results, and provided that the party has no other reasonable basis to believe that the facts stated in the certification are inaccurate. In the case of a violation alleged against a retail outlet or wholesale purchaser-consumer facility, such certification shall be deemed an adequate defense for the retailer or wholesale purchaser-consumer, provided that the retailer or wholesale purchaser-consumer is able to show certificates for all of the gasoline contained in the storage tank found in violation, and, provided that the retailer or wholesale purchaser-consumer has no reasonable basis to believe that the facts stated in the certifications are inaccurate.

[54 FR 11885, Mar. 22, 1989; 54 FR 27017, June 27, 1989, as amended at 56 FR 64711, Dec. 12, 1991; 58 FR 14484, Mar. 17, 1993; 62 FR 68205, Dec. 31, 1997]

§ 80.29 Controls and prohibitions on diesel fuel quality.

(a) *Prohibited activities.* Beginning October 1, 1993 and continuing until the implementation dates for subpart I of part 80 as specified in § 80.500, except as provided in 40 CFR 69.51, no person, including but not limited to, refiners, importers, distributors, resellers, carriers, retailers or wholesale purchaser-consumers, shall manufacture, introduce into commerce, sell, offer for sale, supply, store, dispense, offer for supply or transport any diesel fuel for use in motor vehicles, unless the diesel fuel:

(1) Has a sulfur percentage, by weight, no greater than 0.05 percent;

(2)(i) Has a cetane index of at least 40; or

(ii) Has a maximum aromatic content of 35 volume percent; and

(3) Is free of visible evidence of the dye solvent red 164; unless it is used in a manner that is tax-exempt as defined under section 4082 of the Internal Revenue Code (26 U.S.C. 4082).

(b) *Determination of compliance.* (1) Any diesel fuel which does not show visible evidence of being dyed with dye solvent red 164 (which has a characteristic red color in diesel fuel) shall be considered to be available for use in diesel motor vehicles and motor vehicle engines, and shall be subject to the prohibitions of paragraph (a) of this section.

(2) Compliance with the sulfur, cetane, and aromatics standards in paragraph (a) of this section shall be determined based on the level of the applicable component or parameter, using the sampling methodologies specified in § 80.330(b), as applicable, and the appropriate testing methodologies specified in § 80.580(a) for sulfur, § 80.2(w) for cetane index, and § 80.2(z) for aromatic content. Any evidence or information, including the exclusive use of such evidence or information, may be used to establish the level of the applicable component or parameter in the diesel fuel, if the evidence or information is relevant to whether that level would have been in compliance with the standard if the appropriate sampling and testing methodology had been correctly performed. Such evidence may be obtained from any source or location and may include, but is not limited to, test results using methods other than the compliance methods in this paragraph (b), business records, and commercial documents.

(3) Determination of compliance with the requirements of this section other than the standards described in paragraph (a) of this section, and determination of liability for any violation of this section, may be based on information obtained from any source or location. Such information may include, but is not limited to, business records and commercial documents.

(c) *Transfer documents.* (1) Any person that transfers custody or title of diesel fuel for use in motor vehicles which contains visible evidence of the dye solvent red 164 shall provide documents to the transferee which state that such fuel meets the applicable standards for sulfur and cetane index or aromatic content under these regulations and is only for tax-exempt use in diesel motor vehicles as defined under section 4082 of the Internal Revenue Code.

(2) Any person that is the transferor or the transferee of diesel fuel for use

in motor vehicles which contains visible evidence of the dye solvent red 164, shall retain the documents required under paragraph (c)(1) of this section for a period of five years from the date of transfer of such fuel and shall provide such documents to the Administrator or the Administrator's representative upon request.

(d) *Liability*. Liability for violations of paragraph (a)(1) of this section shall be determined according to the provisions of § 80.30. Any person that violates paragraph (a)(2) or (c) of this section shall be liable for penalties in accordance with paragraph (e) of this section.

(e) *Penalties*. Penalties for violations of paragraph (a) or (c) of this section shall be determined according to the provisions of § 80.5.

[59 FR 35858, July 14, 1994, as amended at 63 FR 49465, Sept. 16, 1998; 66 FR 5135, Jan. 18, 2001]

§ 80.30 Liability for violations of diesel fuel control and prohibitions.

(a) *Violations at refiners or importers facilities*. Where a violation of a diesel fuel standard set forth in § 80.29 is detected at a refinery or importer's facility, the refiner or importer shall be deemed in violation.

(b) *Violations at carrier facilities*. Where a violation of a diesel fuel standard set forth in § 80.29 is detected at a carrier's facility, whether in a transport vehicle, in a storage facility, or elsewhere at the facility, the following parties shall be deemed in violation:

(1) The carrier, except as provided in paragraph (g)(1) of this section; and

(2) The refiner or importer at whose refinery or import facility the diesel fuel was produced or imported, except as provided in paragraph (g)(2) of this section.

(c) *Violations at branded distributor or reseller facilities*. Where a violation of a diesel fuel standard set forth in § 80.29 is detected at a distributor or reseller's facility which is operating under the corporate, trade or brand name of a refiner or any of its marketing subsidiaries, the following parties shall be deemed in violation:

(1) The distributor or reseller, except as provided in paragraph (g)(3) of this section;

(2) The carrier (if any), if the carrier caused the diesel fuel to violate the standard by fuel switching, blending, mislabeling, or any other means; and

(3) The refiner under whose corporate, trade, or brand name (or that of any of its marketing subsidiaries) the distributor or reseller is operating, except as provided in paragraph (g)(4) of this section.

(d) *Violations at unbranded distributor facilities*. Where a violation of a diesel fuel standard set forth in § 80.29 is detected at the facility of a distributor not operating under a refiner's corporate, trade, or brand name, or that of any of its marketing subsidiaries, the following shall be deemed in violation:

(1) The distributor, except as provided in paragraph (g)(3) of this section;

(2) The carrier (if any), if the carrier caused the diesel fuel to violate the standard by fuel switching, blending, mislabeling, or any other means; and

(3) The refiner or importer at whose refinery or import facility the diesel fuel was produced or imported, except as provided in paragraph (g)(2) of this section.

(e) *Violations at branded retail outlets or wholesale purchaser-consumer facilities*. Where a violation of a diesel fuel standard set forth in § 80.29 is detected at a retail outlet or at a wholesale purchaser-consumer facility displaying the corporate, trade, or brand name of a refiner or any of its marketing subsidiaries, the following parties shall be deemed in violation:

(1) The retailer or wholesale purchaser-consumer, except as provided in paragraph (g)(5) of this section;

(2) The distributor and/or reseller (if any), except as provided in paragraph (g)(3) of this section;

(3) The carrier (if any), if the carrier caused the diesel fuel to violate the standard by fuel switching, blending, mislabeling, or any other means; and

(4) The refiner whose corporate, trade, or brand name, or that of any of its marketing subsidiaries, is displayed at the retail outlet or wholesale purchaser-consumer facility, except as

provided in paragraph (g)(4) of this section.

(f) *Violations at unbranded retail outlets or wholesale purchaser-consumer facilities.* Where a violation of a diesel fuel standard set forth in § 80.29 is detected at a retail outlet or at a wholesale purchaser-consumer facility not displaying the corporate, trade, or brand name of a refiner or any of its marketing subsidiaries, the following parties shall be deemed in violation:

(1) The retailer or wholesale purchaser-consumer, except as provided in paragraph (g)(5) of this section;

(2) The distributor (if any), except as provided in paragraph (g)(3) of this section;

(3) The carrier (if any), if the carrier caused the diesel fuel to violate the standard by fuel switching, blending, mislabeling, or any other means; and

(4) The refiner or importer at whose refinery or import facility the diesel fuel was produced or imported, except as provided in paragraph (g)(2) of this section.

(g) *Defenses.* (1) In any case in which a carrier would be in violation under paragraph (b)(1) of this section, the carrier shall not be deemed in violation if he can demonstrate:

(i) Evidence of an oversight program conducted by the carrier, for monitoring the diesel fuel stored or transported by that carrier, such as periodic sampling and testing of the cetane index and sulfur percentage of incoming diesel fuel. Such an oversight program need not include periodic sampling and testing of diesel fuel in a tank truck operated by a common carrier, but in lieu of such tank truck sampling and testing the common carrier shall demonstrate evidence of an oversight program for monitoring compliance with the diesel fuel requirements of § 80.29 relating to the transport or storage of diesel fuel by tank truck, such as appropriate guidance to drivers on compliance with applicable requirements and the periodic review of records normally received in the ordinary course of business concerning diesel fuel quality and delivery; and

(ii) That the violation was not caused by the carrier or his employee or agent.

(2) In any case in which a refiner or importer would be in violation under paragraphs (b)(2), (d)(3), or (f)(4) of this section, the refiner or importer shall not be deemed in violation if he can demonstrate:

(i) That the violation was not caused by him or his employee or agent; and

(ii) Test results, performed in accordance with the applicable sampling and testing methodologies set forth in §§ 80.2(w), 80.2(z), 80.2(bb), and 80.580, which evidence that the diesel fuel determined to be in violation was in compliance with the diesel fuel standards of § 80.29(a) when it was delivered to the next party in the distribution system;

(3) In any case in which a distributor or reseller would be in violation under paragraphs (c)(1), (d)(1), (e)(2) or (f)(2) of this section, the distributor or reseller shall not be deemed in violation if he can demonstrate:

(i) That the violation was not caused by him or his employee or agent; and

(ii) Evidence of an oversight program conducted by the distributor or reseller, such as periodic sampling and testing of diesel fuel, for monitoring the sulfur percentage and cetane index of the diesel fuel that the distributor or reseller sells, supplies, offers for sale or supply, or transports.

(4) In any case in which a refiner would be in violation under paragraphs (c)(3) or (e)(4) of this section, the refiner shall not be deemed in violation if he can demonstrate all of the following:

(i) Test results, performed in accordance with the applicable sampling and testing methodologies set forth in §§ 80.2(w), 80.2(z), 80.2(bb), and 80.580, which evidence that the diesel fuel determined to be in violation was in compliance with the diesel fuel standards of § 80.29(a) when it was delivered to the next party in the distribution system;

(ii) That the violation was not caused by him or his employee or agent; and

(iii) That the violation:

(A) Was caused by an act in violation of law (other than the Act or this part), or an act of sabotage or vandalism, whether or not such acts are violations of law in the jurisdiction where the violation of the requirements of this part occurred, or

(B) Was caused by the action of a reseller or a retailer supplied by such reseller, in violation of a contractual undertaking imposed by the refiner on such reseller designed to prevent such action, and despite reasonable efforts by the refiner (such as periodic sampling and testing) to insure compliance with such contractual obligation, or

(C) Was caused by the action of a retailer who is supplied directly by the refiner (and not by a reseller), in violation of a contractual undertaking imposed by the refiner on such retailer designed to prevent such action, and despite reasonable efforts by the refiner (such as periodic sampling and testing) to insure compliance with such contractual obligation, or

(D) Was caused by the action of a distributor subject to a contract with the refiner for transportation of diesel fuel from a terminal to a distributor, retailer or wholesale purchaser-consumer, in violation of a contractual undertaking imposed by the refiner on such distributor designed to prevent such action, and despite reasonable efforts by the refiner (such as periodic sampling and testing) to ensure compliance with such contractual obligation, or

(E) Was caused by a carrier or other distributor not subject to a contract with the refiner but engaged by him for transportation of diesel fuel from a terminal to a distributor, retailer or wholesale purchaser-consumer, despite reasonable efforts by the refiner (such as specification or inspection of equipment) to prevent such action, or

(F) Occurred at a wholesale purchaser-consumer facility: *Provided, however,* That if such wholesale purchaser-consumer was supplied by a reseller, the refiner must demonstrate that the violation could not have been prevented by such reseller's compliance with a contractual undertaking imposed by the refiner on such reseller as provided in paragraph (g)(4)(iii)(B) of this section.

(iv) In paragraphs (g)(4)(iii) (A) through (E) of this section, the term *was caused* means that the refiner must demonstrate by reasonably specific showings, by direct or circumstantial evidence, that the violation was caused or must have been caused by another.

(5) In any case in which a retailer or wholesale purchaser-consumer would be in violation under paragraphs (e)(1) or (f)(1) of this section, the retailer or wholesale purchaser-consumer shall not be deemed in violation if he can demonstrate that the violation was not caused by him or his employee or agent.

(6) In paragraphs (g)(1)(iii), (g)(2)(i), (g)(3)(i), (g)(4)(ii) and (g)(5) of this section, the respective party must demonstrate by reasonably specific showings, by direct or circumstantial evidence, that it or its employee or agent did not cause the violation.

(7) In the case of any distributor or reseller that would be in violation under paragraph (e)(2) or (f)(2) of this section or any wholesale purchaser-consumer or retailer that would be in violation under paragraph (e)(1) or (f)(1) of this section for diesel fuel for use in motor vehicles which contains visible evidence of the dye solvent red 164, the distributor or reseller or wholesale purchaser-consumer or retailer shall not be deemed in violation if he can:

(i) Demonstrate that the violation was not caused by him or his employee or agent,

(ii) Demonstrate that the fuel has been supplied, offered for supply, transported or available for tax-exempt use as defined under section 4082 of the Internal Revenue Code, and

(iii) Provide evidence from the supplier in the form of documentation that the fuel met the applicable standards under paragraph (a)(1) of this section for sulfur and cetane index or aromatics content for use in motor vehicles.

(h) *Detection of violations.* In paragraphs (a) through (f) of this section, the term ''is detected at'' means that the violation existed at the facility in question, and the existence of the violation at that facility may be established through evidence obtained or created at that facility, at any other location, and by any party.

[55 FR 34138, Aug. 21, 1990, as amended at 59 FR 35859, July 14, 1994; 62 FR 68205, Dec. 31, 1997; 66 FR 5135, Jan. 18, 2001]

§ 80.32 Controls applicable to liquefied petroleum gas retailers and wholesale purchaser-consumers.

After January 1, 1998 every retailer and wholesale purchaser- consumer handling over 13,660 gallons of liquefied petroleum gas per month shall equip each pump from which liquefied petroleum gas is introduced into motor vehicles with a nozzle that has no greater than 2.0 cm^3 dead space from which liquefied petroleum gas will be released upon nozzle disconnect from the vehicle, as measured from the nozzle face which seals against the vehicle receptacle ''O'' ring, and as determined by calculation of the geometric shape of the nozzle. After January 1, 2000 this requirement applies to every liquefied petroleum gas retailer and wholesale purchaser- consumer. Any dispensing pump shown to be dedicated to heavy-duty vehicles is exempt from this requirement.

[59 FR 48490, Sept. 21, 1994]

§ 80.33 Controls applicable to natural gas retailers and wholesale purchaser-consumers.

(a) After January 1, 1998 every retailer and wholesale purchaser-consumer handling over 1,215,000 standard cubic feet of natural gas per month shall equip each pump from which natural gas is introduced into natural gas motor vehicles with a nozzle and hose configuration which vents no more than 1.2 grams of natural gas to the atmosphere per refueling of a vehicle complying with § 86.098–8(d)(1)(iv) of this chapter, as determined by calculation of the geometric shape of the nozzle and hose. After January 1, 2000 this requirement applies to every natural gas retailer and wholesale purchaser-consumer. Any dispensing pump shown to be dedicated to heavy-duty vehicles is exempt from this requirement.

(b) The provisions of paragraph (a) of this section can be waived for refueling stations which were in operation on or before January 1, 1998 provided the station operator can demonstrate, to the satisfaction of the Administrator, that compliance with paragraph (a) of this section would require additional compression equipment or other modifications with costs similar to or greater than the cost of additional compression equipment.

[59 FR 48490, Sept. 21, 1994]

Subpart C—Oxygenated Gasoline

§ 80.35 Labeling of retail gasoline pumps; oxygenated gasoline.

(a) For oxygenated gasoline programs with a minimum oxygen content per gallon or minimum oxygen content requirement in conjunction with a credit program, the following shall apply:

(1) Each gasoline pump stand from which oxygenated gasoline is dispensed at a retail outlet in the control area shall be affixed during the control period with a legible and conspicuous label which contains the following statement:

The gasoline dispensed from this pump is oxygenated and will reduce carbon monoxide pollution from motor vehicles.

(2) The posting of the above statement shall be in block letters of no less than 20-point bold type; in a color contrasting with the intended background. The label shall be placed on the vertical surface of the pump on each side with gallonage and price meters and shall be on the upper two-thirds of the pump, clearly readable to the public.

(3) The retailer shall be responsible for compliance with the labeling requirements of this section.

(b) For oxygenated gasoline programs with a credit program and no minimum oxygen content requirement, the following shall apply:

(1) Each gasoline pump stand from which oxygenated gasoline is dispensed at a retail outlet in the control area shall be affixed during the control period with a legible and conspicuous label which contains the following statement:

The fuel dispensed from this pump meets the requirements of the Clean Air Act as part of a program to reduce carbon monoxide pollution from motor vehicles.

(2) The posting of the above statement shall be in block letters of no less than 20-point bold type; in a color contrasting with the intended background. The label shall be placed on the vertical surface of the pump on each

side with gallonage and price meters and shall be on the upper two-thirds of the pump, clearly readable to the public.

(3) The retailer shall be responsible for compliance with the labeling requirements of this section.

[57 FR 47771, Oct. 20, 1992]

§ § 80.36–80.39 [Reserved]

Subpart D—Reformulated Gasoline

SOURCE: 59 FR 7813, Feb. 16, 1994, unless otherwise noted.

§ 80.40 Fuel certification procedures.

(a) Gasoline that complies with one of the standards specified in § 80.41 (a) through (f) that is relevant for the gasoline, and that meets all other relevant requirements prescribed under § 80.41, shall be deemed certified.

(b) Any refiner or importer may, with regard to a specific fuel formulation, request from the Administrator a certification that the formulation meets one of the standards specified in § 80.41 (a) through (f).

§ 80.41 Standards and requirements for compliance.

(a) *Simple model per-gallon standards.* The ''simple model'' standards for compliance when achieved on a per-gallon basis are as follows:

SIMPLE MODEL PER-GALLON STANDARDS

Reid vapor pressure (in pounds per square inch):	
Gasoline designated for VOC-Control Region 1	≤7.2
Gasoline designated for VOC-Control Region 2	≤8.1
Oxygen content (percent, by weight)	≥2.0
Toxic air pollutants emissions reduction (percent)	≥15.0
Benzene (percent, by volume)	≤1.00

(b) *Simple model averaged standards.* The ''simple model'' standards when achieved on average are as follows:

SIMPLE MODEL AVERAGED STANDARDS

Reid vapor pressure (in pounds per square inch):	
Gasoline designated for VOC-Control Region 1:	
Standard	≤7.1
Per-Gallon Maximum	≤7.4
Gasoline designated for VOC-Control Region 2:	
Standard	≤8.0
Per-Gallon Maximum	≤8.3
Oxygen content (percent, by weight):	
Standard	≥2.1
Per-Gallon Minimum	≥1.5
Toxic air pollutants emissions reduction (percent)	≥16.5
Benzene (percent, by volume):	
Standard	≤0.95
Per-Gallon Maximum	≤1.30

SIMPLE MODEL AVERAGED STANDARDS—Continued

(c) *Phase I complex model per gallon standards.* The Phase I ''complex model'' standards for compliance when achieved on a per-gallon basis are as follows:

PHASE I—COMPLEX MODEL PER-GALLON STANDARDS

VOC emissions performance reduction (percent):	
Gasoline designated for VOC-Control Region 1	≥35.1
Gasoline designated for VOC-Control Region 2	≥15.6
Toxic air pollutants emissions performance reduction (percent)	≥15.0
NO_X emissions performance reduction (percent)	≥0.0
Oxygen content (percent, by weight)	≥2.0
Benzene (percent, by volume)	≤1.00

(d) *Phase I complex model averaged standards.* The Phase I ''complex model'' standards for compliance when achieved on average are as follows:

PHASE I COMPLEX MODEL AVERAGED STANDARDS

VOC emissions performance reduction (percent)	
Gasoline designated for VOC-Control Region 1:	
Standard	≥36.6
Per-Gallon Minimum	≥32.6
Gasoline designated for VOC-Control Region 2:	
Standard	≥17.1
Per-Gallon Minimum	≥13.1
Toxics air pollutants emissions performance reduction (percent)	≥16.5
NO_X emissions performance reduction (percent)	≥1.5
Oxygen content (percent, by weight):	
Standard	≥2.1
Per-Gallon Minimum	≥1.5
Benzene (percent, by volume):	
Standard	≤0.95
Per-Gallon Maximum	≤1.30

(e) *Phase II complex model per-gallon standards.* The Phase II ''complex model'' standards for compliance when achieved on a per-gallon basis are as follows:

PHASE II—COMPLEX MODEL PER-GALLON STANDARDS

VOC emissions performance reduction (percent):	
Gasoline designated for VOC-Control Region 1	≥27.5
Gasoline designated for VOC-Control Region 2	≥25.9
Toxic air pollutants emissions performance reduction (percent)	≥20.0
NO_X emissions performance reduction (percent):	
Gasoline designated as VOC-controlled	≥5.5
Gasoline not designated as VOC-controlled	≥0.0
Oxygen content (percent, by weight)	≥2.0
Benzene (percent, by volume)	≤1.00

(f) *Phase II complex model averaged standards.* The Phase II ''complex model'' standards for compliance when achieved on average are as follows:

PHASE II COMPLEX MODEL AVERAGED STANDARDS

VOC emissions performance reduction (percent):	
Gasoline designated for VOC-Control Region 1:	
Standard	≥29.0
Per-Gallon Minimum	≥25.0
Gasoline designated for VOC-Control Region 2:	
Standard	≥27.4
Per-Gallon Minimum	≥23.4
Toxics air pollutants emissions performance reduction (percent)	≥21.5
NO_X emissions performance reduction (percent):	
Gasoline designated as VOC-Controlled	≥6.8
Gasoline not designated as VOC-Controlled	≥1.5
Oxygen content (percent, by weight):	
Standard	≥2.1
Per-Gallon Minimum	≥1.5
Benzene (percent, by volume):	
Standard	≤0.95
Per-Gallon Maximum	≤1.30
Benzene (percent, by volume):	
Standard	≤0.95
Per-Gallon Minimum	≤1.30

(g) *Oxygen maximum standard.* (1) The per-gallon standard for maximum oxygen content, which applies to reformulated gasoline subject to the simple model per-gallon or average standards, is as follows:

(i) Oxygen content shall not exceed 3.2 percent by weight from ethanol within the boundaries of any State if the State notifies the Administrator that the use of an oxygenate will interfere with attainment or maintenance of an ambient air quality standard or will contribute to an air quality problem.

(ii) A State may request the standard specified in paragraph (g)(1)(i) of this section separately for reformulated gasoline designated as VOC-controlled and reformulated gasoline not designated as VOC-controlled.

(2) The standard in paragraph (g)(1)(i) of this section shall apply 60 days after the Administrator publishes a notice in the FEDERAL REGISTER announcing such a standard.

(h) *Additional standard requirements.* In addition to the standards specified in paragraphs (a) through (g) of this section, the following standards apply for all reformulated gasoline:

(1) The standard for heavy metals, including lead or manganese, on a per-gallon basis, is that reformulated gasoline may contain no heavy metals. The Administrator may waive this prohibition for a heavy metal (other than lead) if the Administrator determines that addition of the heavy metal to the gasoline will not increase, on an aggregate mass or cancer-risk basis, toxic air pollutant emissions from motor vehicles.

(2) In the case of any refinery or importer subject to the simple model standards:

(i) The annual average levels for sulfur, T–90, and olefins cannot exceed that refinery's or importer's 1990 baseline levels for each of these parameters; and

(ii) The 1990 baseline levels and the annual averages for these parameters shall be established using the methodology set forth in §§ 80.91 through 80.92; and

(iii) In the case of a refiner that operates more than one refinery, the standards specified under this paragraph (h)(2) shall be met using the refinery grouping selected by the refiner under § 80.101(h).

(i) *Use of simple and complex models.* (1) During each calendar year 1995 through 1997, any refinery or importer shall be subject to either the simple model standards specified in paragraphs (a) and (b) of this section, or the Phase I complex model standards specified in paragraphs (c) and (d) of this section, at the option of the refiner or importer, provided that:

(i) No refinery or importer may be subject to a combination of simple and complex standards during any calendar year; and

(ii) Any refiner or importer that elects to achieve compliance with the anti-dumping requirements using the:

(A) Simple model shall meet the requirements of this subpart D using the simple model standards; or

(B) Complex model or optional complex model shall meet the requirements of this subpart D using the complex model standards.

(2) During the period January 1, 1998 through December 31, 1999, any refiner or importer shall be subject to the Phase I complex model standards specified in paragraphs (c) and (d) of this section.

(3) Beginning on January 1, 2000, any refiner or importer shall be subject to the Phase II complex model standards specified in paragraphs (e) and (f) of this section.

(j) *Complex model early use.* Before January 1, 1998, the VOC, toxics, and

NO_X emissions performance standards for any refinery or importer subject to the Phase I complex model standards shall be determined by evaluating all of the following parameter levels in the Phase I complex model (specified in § 80.45) at one time:

(1) The simple model values for benzene, RVP, and oxygen specified in § 80.41 (a) or (b), as applicable;

(2) The aromatics value which, together with the values for benzene, RVP, and oxygen determined under paragraph (j)(1) of this section, meets the Simple Model toxics requirement specified in paragraph (a) or (b) of this section, as applicable;

(3) The refinery's or importer's individual baseline values for sulfur, E–300, and olefins, as established under § 80.91; and

(4) The appropriate seasonal value of E–200 specified in § 80.45(b)(2).

(k) *Effect of VOC survey failure.* (1) On each occasion during 1995 or 1996 that a covered area fails a simple model VOC emissions reduction survey conducted pursuant to § 80.68, the RVP requirements for that covered area beginning in the year following the failure shall be adjusted to be more stringent as follows:

(i) The required average RVP level shall be decreased by an additional 0.1 psi; and

(ii) The maximum RVP level for each gallon of averaged gasoline shall be decreased by an additional 0.1 psi.

(2) On each occasion that a covered area fails a complex model VOC emissions reduction survey conducted pursuant to § 80.68, or fails a simple model VOC emissions reduction survey conducted pursuant to § 80.68 during 1997, the VOC emissions performance standard for that covered area beginning in the year following the failure shall be adjusted to be more stringent as follows:

(i) The required average VOC emissions reduction shall be increased by an additional 1.0%; and

(ii) The minimum VOC emissions reduction, for each gallon of averaged gasoline, shall be increased by an additional 1.0%.

(3) In the event that a covered area for which required VOC emissions reductions have been made more stringent passes all VOC emissions reduction surveys in two consecutive years, the averaging standards VOC emissions reduction for that covered area beginning in the year following the second year of passed survey series shall be made less stringent as follows:

(i) The required average VOC emissions reduction shall be decreased by 1.0%; and

(ii) The minimum VOC emissions reduction shall be decreased by 1.0%.

(4) In the event that a covered area for which the required VOC emissions reductions have been made less stringent fails a subsequent VOC emissions reduction survey:

(i) The required average VOC emission reductions for that covered area beginning in the year following this subsequent failure shall be made more stringent by increasing the required average and the minimum VOC emissions reduction by 1.0%; and

(ii) The required VOC emission reductions for that covered area thereafter shall not be made less stringent regardless of the results of subsequent VOC emissions reduction surveys.

(l) *Effect of toxics survey failure.* (1) On each occasion during 1995 or 1996 that a covered area fails a simple model toxics emissions reduction survey series, conducted pursuant to § 80.68, the simple model toxics emissions reduction requirement for that covered area beginning in the year following the year of the failure is made more stringent by increasing the average toxics emissions reduction by an additional 1.0%.

(2) On each occasion that a covered area fails a complex model toxics emissions reduction survey series, conducted pursuant to § 80.68, or fails a simple model toxics emissions reduction survey series conducted pursuant to § 80.68 during 1997, the complex model toxics emissions reduction requirement for that covered area beginning in the year following the year of the failure is made more stringent by increasing the average toxics emissions reduction by an additional 1.0%.

(3) In the event that a covered area for which the toxics emissions standard has been made more stringent passes all toxics emissions survey series in two consecutive years, the averaging

standard for toxics emissions reductions for that covered area beginning in the year following the second year of passed survey series shall be made less stringent by decreasing the average toxics emissions reduction by 1.0%.

(4) In the event that a covered area for which the toxics emissions reduction standard has been made less stringent fails a subsequent toxics emissions reduction survey series:

(i) The standard for toxics emissions reduction for that covered area beginning in the year following this subsequent failure shall be made more stringent by increasing the average toxics emissions reduction by 1.0%; and

(ii) The standard for toxics emissions reduction for that covered area thereafter shall not be made less stringent regardless of the results of subsequent toxics emissions reduction surveys.

(m) *Effect of NO_X survey or survey series failure.*

(1) On each occasion that a covered area fails a NO_X emissions reduction survey or survey series conducted pursuant to § 80.68, the required average NO_X emissions reductions for that covered area beginning in the year following the failure shall be increased in stringency by an additional 1.0%.

(2) In the event that a covered area for which required NO_X emissions reductions have been made more stringent passes all NO_X emissions reduction surveys and survey series in two consecutive years, the required average NO_X emissions reductions for that covered area beginning in the year following the second year of passed surveys and survey series shall be decreased in stringency by 1.0%.

(3) In the event that a covered area for which the required NO_X emissions reductions have been made less stringent fails a subsequent NO_X emissions reduction survey or survey series:

(i) The required average NO_X emission reductions for that covered area beginning in the year following this subsequent failure shall be increased in stringency by 1.0%; and

(ii) The required NO_X emission reductions for that covered area thereafter shall not be made less stringent regardless of the results of subsequent NO_X emissions reduction surveys or survey series.

(n) *Effect of benzene survey failure.* (1) On each occasion that a covered area fails a benzene content survey series, conducted pursuant to § 80.68, the benzene content standards for that covered area beginning in the year following the year of the failure shall be made more stringent as follows:

(i) The average benzene content shall be decreased by 0.05% by volume; and

(ii) The maximum benzene content for each gallon of averaged gasoline shall be decreased by 0.10% by volume.

(2) In the event that a covered area for which the benzene standards have been made more stringent passes all benzene content survey series conducted in two consecutive years, the benzene standards for that covered area beginning in the year following the second year of passed survey series shall be made less stringent as follows:

(i) The average benzene content shall be increased by 0.05% by volume; and

(ii) The maximum benzene content for each gallon of averaged gasoline shall be increased by 0.10% by volume.

(3) In the event that a covered area for which the benzene standards have been made less stringent fails a subsequent benzene content survey series:

(i) The standards for benzene content for that covered area beginning in the year following this subsequent failure shall be the more stringent standards which were in effect prior to the operation of paragraph (n)(2) of this section; and

(ii) The standards for benzene content for that covered area thereafter shall not be made less stringent regardless of the results of subsequent benzene content surveys.

(o) *Effect of oxygen survey failure.* (1) In any year that a covered area fails an oxygen content survey series, conducted pursuant to § 80.68, the minimum oxygen content requirement for that covered area beginning in the year following the year of the failure is made more stringent by increasing the minimum oxygen content standard, for each gallon of averaged gasoline, by an additional 0.1%; however, in no case shall the minimum oxygen content standard be greater than 2.0%.

(2) In the event that a covered area for which the minimum oxygen content standard has been made more stringent

passes all oxygen content survey series in two consecutive years, the minimum oxygen content standard for that covered area beginning in the year following the second year of passed survey series shall be made less stringent by decreasing the minimum oxygen content standard by 0.1%.

(3) In the event that a covered area for which the minimum oxygen content standard has been made less stringent fails a subsequent oxygen content survey series:

(i) The standard for minimum oxygen content for that covered area beginning in the year following this subsequent failure shall be made more stringent by increasing the minimum oxygen content standard by 0.1%; and

(ii) The minimum oxygen content standard for that covered area thereafter shall not be made less stringent regardless of the results of subsequent oxygen content surveys.

(p) *Effective date for changed minimum or maximum standards.* In the case of any minimum or maximum standard that is changed to be more stringent by operation of paragraphs (k), (m), (n), or (o) of this section, the effective date for such change shall be ninety days following the date EPA announces the change.

(q) *Refineries, importers, and oxygenate blenders subject to adjusted standards.* Standards for average compliance that are adjusted to be more or less stringent by operation of paragraphs (k), (l), (m), (n), or (o) of this section apply to averaged reformulated gasoline produced at each refinery or oxygenate blending facility, or imported by each importer as follows:

(1) Adjusted standards for a covered area apply to averaged reformulated gasoline that is produced at a refinery or oxygenate blending facility if:

(i) Any averaged reformulated gasoline from that refinery or oxygenate blending facility supplied the covered area during any year a survey was conducted which gave rise to a standards adjustment; or

(ii) Any averaged reformulated gasoline from that refinery or oxygenate blending facility supplies the covered area during any year that the standards are more stringent than the initial standards; unless

(iii) The refiner or oxygenate blender is able to show that the volume of averaged reformulated gasoline from a refinery or oxygenate blending facility that supplied the covered area during any year under paragraphs (q)(1) (i) or (ii) of this section was less than one percent of the reformulated gasoline produced at the refinery or oxygenate blending facility during that year, or 100,000 barrels, whichever is less.

(2) Adjusted standards for a covered area apply to averaged reformulated gasoline that is imported by an importer if:

(i) The covered area with the adjusted standard is located in Petroleum Administration for Defense District (PADD) I, and the gasoline is imported at a facility located in PADDs I, II or III;

(ii) The covered area with the adjusted standard is located in PADD II, and the gasoline is imported at a facility located in PADDs I, II, III, or IV;

(iii) The covered area with the adjusted standard is located in PADD III, and the gasoline is imported at a facility located in PADDs II, III, or IV;

(iv) The covered area with the adjusted standard is located in PADD IV, and the gasoline is imported at a facility located in PADDs II, or IV; or

(v) The covered area with the adjusted standard is located in PADD V, and the gasoline is imported at a facility located in PADDs III, IV, or V; unless

(vi) Any gasoline which is imported by an importer at any facility located in any PADD supplies the covered area, in which case the adjusted standard also applies to averaged gasoline imported at that facility by that importer.

(3) Any gasoline that is transported in a fungible manner by a pipeline, barge, or vessel shall be considered to have supplied each covered area that is supplied with any gasoline by that pipeline, or barge or vessel shipment, unless the refiner or importer is able to establish that the gasoline it produced or imported was supplied only to a smaller number of covered areas.

(4) Adjusted standards apply to all averaged reformulated gasoline produced by a refinery or imported by an

importer identified in this paragraph (q), except:

(i) In the case of adjusted VOC standards for a covered area located in VOC Control Region 1, the adjusted VOC standards apply only to averaged reformulated gasoline designated as VOC-controlled intended for use in VOC Control Region 1; and

(ii) In the case of adjusted VOC standards for a covered area located in VOC Control Region 2, the adjusted VOC standards apply only to averaged reformulated gasoline designated as VOC-controlled intended for use in VOC Control Region 2.

(r) *Definition of PADD.* For the purposes of this section only, the following definitions of PADDs apply:

(1) The following States are included in PADD I:

Connecticut	New Hampshire
Delaware	New Jersey
District of Columbia	North Carolina
Florida	Pennsylvania
Georgia	Rhode Island
Maine	South Carolina
Maryland	Vermont
Massachusetts	Virginia
New York	West Virginia

(2) The following States are included in PADD II:

Illinois	Nebraska
Indiana	North Dakota
Iowa	Ohio
Kansas	Oklahoma
Kentucky	South Dakota
Michigan	Tennessee
Minnesota	Wisconsin
Missouri	

(3) The following States are included in PADD III:

Alabama	Mississippi
Arkansas	New Mexico
Louisiana	Texas

(4) The following States are included in PADD IV:

Colorado	Utah
Idaho	Wyoming
Montana	

(5) The following States are included in PADD V:

Arizona	Oregon
California	Washington
Nevada	

[59 FR 7813, Feb. 16, 1994, as amended at 59 FR 36958, July 20, 1994; 61 FR 12041, Mar. 25, 1996; 62 FR 68205, Dec. 31, 1997; 64 FR 37689, July 13, 1999]

§ 80.42 Simple emissions model.

(a) *VOC emissions.* The following equations shall comprise the simple model for VOC emissions. The simple model for VOC emissions shall be used only in determining toxics emissions:

Summer = The period of May 1 through September 15

Winter = The period of September 16 through April 30

EXHVOCS1 = Exhaust nonmethane, nonethane VOC emissions from the fuel in question, in grams per mile, for VOC control region 1 during the summer period.

EXHVOCS2 = Exhaust nonmethane, nonethane VOC emissions from the fuel in question, in grams per mile, for VOC control region 2 during the summer period.

EXHVOCW = Exhaust nonmethane, nonethane VOC emissions from the fuel in question, in grams per mile, during the winter period.

EVPVOCS1 = Evaporative nonmethane, nonethane VOC emissions from the fuel in question, in grams per mile, for VOC control region 1 during the summer period.

EVPVOCS2 = Evaporative nonmethane, nonethane VOC emissions from the fuel in question, in grams per mile, for VOC control region 2 during the summer period.

RLVOCS1 = Running loss nonmethane, nonethane VOC emissions from the fuel in question, in grams per mile, for VOC control region 1 during the summer period.

RLVOCS2 = Running loss nonmethane, nonethane VOC emissions from the fuel in question, in grams per mile, for VOC control region 2 during the summer period.

REFVOCS1 = Refueling nonmethane, nonethane VOC emissions from the fuel in question, in grams per mile, for VOC control region 1 during the summer period.

REFVOCS2 = Refueling nonmethane, nonethane VOC emissions from the fuel in question, in grams per mile, for VOC control region 2 during the summer period.

OXCON = Oxygen content of the fuel in question, in terms of weight percent (as measured under § 80.46)

RVP = Reid vapor pressure of the fuel in question, in pounds per square inch (psi)

(1) The following equations shall comprise the simple model for VOC emissions in VOC Control Region 1 during the summer period:

$$EXHVOCS1 = 0.444 \times (1 - (0.127/2.7) \times OXCON)$$

$$EVPVOCS1 = 0.7952 - 0.2461 \times RVP + 0.02293 \times RVP \times RVP$$

RLVOCS1 = −0.734+0.1096×RVP +0.002791×RVP×RVP
REFVOCS1 = 0.04×((0.1667×RVP)−0.45)

(2) The following equations shall comprise the simple model for VOC emissions in VOC Control Region 2 during the summer period:

EXHVOCS2 = 0.444 × (1 − (0.127/2.7) × OXCON)
EVPVOCS2 = 0.813 − 0.2393 × RVP + 0.021239 × RVP × RVP
RLVOCS2 = 0.2963 − 0.1306 × RVP + 0.016255 × RVP × RVP
REFVOCS2 = 0.04 × ((0.1667 × RVP) − 0.45)

(3) The following equation shall comprise the simple model for VOC emissions during the winter period:

EXHVOCW = 0.656 × (1 − (0.127/2.7) × OXCON)

(b) *Toxics emissions*. The following equations shall comprise the simple model for toxics emissions:

EXHBEN = Exhaust benzene emissions from the fuel in question, in milligrams per mile
EVPBEN = Evaporative benzene emissions from the fuel in question, in milligrams per mile
HSBEN = Hot soak benzene emissions from the fuel in question, in milligrams per mile
DIBEN = Diurnal benzene emissions from the fuel in question, in milligrams per mile
RLBEN = Running loss benzene emissions from the fuel in question, in milligrams per mile
REFBEN = Refueling benzene emissions from the fuel in question, in milligrams per mile
MTBE = Oxygen content of the fuel in question in the form of MTBE, in terms of weight percent (as measured under § 80.46)
ETOH = Oxygen content of the fuel in question in the form of ethanol, in terms of weight percent (as measured under § 80.46)
ETBE = Oxygen content of the fuel in question in the form of ETBE, in terms of weight percent (as measured under § 80.46)
FORM = Formaldehyde emissions from the fuel in question, in milligrams per mile
ACET = Acetaldehyde emissions from the fuel in question, in milligrams per mile
POM = Emissions of polycyclic organic matter from the fuel in question, in milligrams per mile
BUTA = Emissions of 1,3-Butadiene from the fuel in question, in milligrams per mile
FBEN = Fuel benzene of the fuel in question, in terms of volume percent (as measured under § 80.46)
FAROM = Fuel aromatics of the fuel in question, in terms of volume percent (as measured under § 80.46)
TOXREDS1 = Total toxics reduction of the fuel in question during the summer period for VOC control region 1 in percent
TOXREDS2 = Total toxics reduction of the fuel in question during the summer period for VOC control region 2 in percent
TOXREDW = Total toxics reduction of the fuel in question during the winter period in percent

(1) The following equations shall comprise the simple model for toxics emissions in VOC control region 1 during the summer period:

TOXREDS1 = [100 × (53.2 − EXHBEN − EVPBEN − RLBEN − REFBEN − FORM − ACET − BUTA − POM)] / 53.2
EXHBEN = [1.884+0.949 × FBEN + 0.113 × (FAROM − FBEN)) / 100] × 1000 × EXHVOCS1
EVPBEN = HSBEN + DIBEN
HSBEN = FBEN × (EVPVOCS1 × 0.679) × 1000 × [(1.4448 − (0.0684 × MTBE/2.0) − (0.080274 × RVP)) / 100]
DIBEN = FBEN × (EVPVOCS1 × 0.321) × 1000 × [(1.3758 − (0.0579 × MTBE/2.0) − (0.080274 × RVP)) / 100]
RLBEN = FBEN × RLVOCS1 × 1000 × [(1.4448 − (0.0684 × MTBE/2.0) − (0.080274 × RVP)) / 100]
REFBEN = FBEN × REFVOCS1 × 1000 × [(1.3972 − (0.0591 × MTBE / 2.0) − (0.081507 × RVP)) / 100] BUTA = 0.00556 × EXHVOCS1 × 1000
POM = 3.15 × EXHVOCS1

(i) For any oxygenate or mixtures of oxygenates, the formaldehyde and acetaldehyde shall be calculated with the following equations:

FORM = 0.01256 × EXHVOCS1 × 1000 × [1 + (0.421 / 2.7) × MTBE + TAME) + (0.358 / 3.55) × ETOH + (0.137 / 2.7) × (ETBE + ETAE)]
ACET = 0.00891 × EXHVOCS1 × 1000 × [1 + (0.078 / 2.7) × (MTBE + TAME) + (0.865 / 3.55) × ETOH + (0.867 / 2.7) × (ETBE + ETAE)]

(ii) When calculating formaldehyde and acetaldehyde emissions using the equations in paragraph (b)(1)(i) of this section, oxygen in the form of alcohols which are more complex or have higher molecular weights than ethanol shall be evaluated as if it were in the form of ethanol. Oxygen in the form of methyl ethers other than TAME and MTBE shall be evaluated as if it were in the form of MTBE. Oxygen in the form of ethyl ethers other than ETBE shall be evaluated as if it were in the form of ETBE. Oxygen in the form of non-methyl, non-ethyl ethers shall be evaluated as if it were in the form of ETBE. Oxygen in the form of methanol or non-alcohol, non-ether oxygenates shall not be evaluated with the Simple Model, but instead must be evaluated

through vehicle testing under the Complex Model per § 80.48.

(2) The following equations shall comprise the simple model for toxics emissions in VOC control region 2 during the summer period:

TOXREDS2 = 100 × (52.1 − EXHBEN − EVPBEN − RLBEN − REFBEN − FORM − ACET − BUTA − POM) / 52.1

EXHBEN = [(1.884 + 0.949 × FBEN + 0.113 × (FAROM − FBEN)) / 100] × 1000 × EXHVOCS2

EVPBEN = HSBEN + DIBEN

HSBEN = FBEN × (EVPVOCS2 × 0.679) × 1000 × [(1.4448 − (0.0684 × MTBE / 2.0) − (0.080274 × RVP)) / 100]

DIBEN = FBEN × (EVPVOCS2 × 0.321) × 1000 × [(1.3758 − (0.0579 × MTBE / 2.0) − (0.080274 × RVP)) / 100]

RLBEN = FBEN × RLVOCS2 × 1000 × [(1.4448 − (0.0684 × MTBE / 2.0) − (0.080274 × RVP)) / 100]

REFBEN = FBEN × REFVOCS2 × 1000 × [(1.3972 − (0.0591 × MTBE / 2.0) − (0.081507 × RVP)) / 100]

BUTA = 0.00556 × EXHVOCS2 × 1000

POM = 3.15 × EXHVOCS2

(i) For any oxygenate or mixtures of oxygenates, the formaldehyde and acetaldehyde shall be calculated with the following equations:

FORM = 0.01256 × EEXHVOCS2 × 1000 × [1 + (0.421 / 2.7) × (MTBE + TAME) + (0.358 / 3.55) × ETOH + (0.137 / 2.7) × (ETBE + ETAE)]

ACET = 0.00891 × EXHVOCS2 × 1000 × [1 + (0.078 / 2.7) × (MTBE + TAME) + (0.865 / 3.55) × ETOH + (0.867 / 2.7) × (ETBE + ETAE)]

(ii) When calculating formaldehyde and acetaldehyde emissions using the equations in paragraph (b)(2)(i) of this section, oxygen in the form of alcohols which are more complex or have higher molecular weights than ethanol shall be evaluated as if it were in the form of ethanol. Oxygen in the form of methyl ethers other than TAME and MTBE shall be evaluated as if it were in the form of MTBE. Oxygen in the form of ethyl ethers other than ETBE shall be evaluated as if it were in the form of ETBE. Oxygen in the form of non-methyl, non-ethyl ethers shall be evaluated as if it were in the form of ETBE. Oxygen in the form of methanol or non-alcohol, non-ether oxygenates shall not be evaluated with the Simple Model, but instead must be evaluated through vehicle testing under the Complex Model per § 80.48.

(3) The following equations shall comprise the simple model for toxics emissions during the winter period:

TOXREDW = 100 × (55.5 − EXHBEN − FORM − ACET − BUTA − POM) / 55.5

EXHBEN = [(1.884 + 0.949 × FBEN + 0.113 × (FAROM − FBEN)) / 100] × 1000 × EXHVOCW

BUTA = 0.00556 × EXHVOCW × 1000

POM = 2.13 × EXHVOCW

(i) For any oxygenate or mixtures of oxygenates, the formaldehyde and acetaldehyde shall be calculated with the following equations:

FORM = 0.01256 × EXHVOCS1 × 1000 × [1 + (0.421 / 2.7) × (MTBE + TAME) + (0.358 / 3.55) × ETOH + (0.137 / 2.7) × (ETBE + ETAE)]

ACET = 0.00891 × EXHVOCS1 × 1000 × [1 + (0.078 / 2.7) × (MTBE + TAME) + (0.865 / 3.55) × ETOH + (0.867 / 2.7) × (ETBE + ETAE)]

(ii) When calculating formaldehyde and acetaldehyde emissions using the equations in paragraph (b)(3)(i) of this section, oxygen in the form of alcohols which are more complex or have higher molecular weights than ethanol shall be evaluated as if it were in the form of ethanol. Oxygen in the form of methyl ethers other than TAME and MTBE shall be evaluated as if it were in the form of MTBE. Oxygen in the form of ethyl ethers other than ETBE shall be evaluated as if it were in the form of ETBE. Oxygen in the form of non-methyl, non-ethyl ethers shall be evaluated as if it were in the form of ETBE. Oxygen in the form of methanol or non-alcohol, non-ether oxygenates shall not be evaluated with the Simple Model, but instead must be evaluated through vehicle testing under the Complex Model per § 80.48.

(4) If the fuel aromatics content of the fuel in question is less than 10 volume percent, then an FAROM value of 10 volume percent shall be used when evaluating the toxics emissions equations given in paragraphs (b)(1), (b)(2), and (b)(3) of this section.

(c) *Limits of the model.* (1) The model given in paragraphs (a) and (b) of this section shall be used as given to determine VOC and toxics emissions, respectively, if the properties of the fuel being evaluated fall within the ranges shown in this paragraph (c). If the properties of the fuel being evaluated fall outside the range shown in this paragraph (c), the model may not be

used to determine the VOC or toxics performance of the fuel:

Fuel parameter	Range
Benzene content	0.0–4.9 vol %.
RVP	6.6–9.0 psi.[1]
Oxygenate content	0–4.0 wt %.
Aromatics content	0–55 vol %.

[1] For gasoline sold in California, the applicable RVP range shall be 6.4–9.0 psi.

(2) The model given in paragraphs (a) and (b) of this section shall be effective from January 1, 1995 through December 31, 1997, unless extended by action of the Administrator.

[59 FR 7813, Feb. 16, 1994, as amended at 59 FR 36958, July 20, 1994; 61 FR 20738, May 8, 1996]

§§ 80.43–80.44 [Reserved]

§ 80.45 Complex emissions model.

(a) *Definition of terms.* For the purposes of this section, the following definitions shall apply:

Target fuel = The fuel which is being evaluated for its emissions performance using the complex model
OXY = Oxygen content of the target fuel in terms of weight percent
SUL = Sulfur content of the target fuel in terms of parts per million by weight
RVP = Reid Vapor Pressure of the target fuel in terms of pounds per square inch
E200 = 200 °F distillation fraction of the target fuel in terms of volume percent
E300 = 300 °F distillation fraction of the target fuel in terms of volume percent
ARO = Aromatics content of the target fuel in terms of volume percent
BEN = Benzene content of the target fuel in terms of volume percent
OLE = Olefins content of the target fuel in terms of volume percent
MTB = Methyl tertiary butyl ether content of the target fuel in terms of weight percent oxygen
ETB = Ethyl tertiary butyl ether content of the target fuel in terms of weight percent oxygen
TAM = Tertiary amyl methyl ether content of the target fuel in terms of weight percent oxygen
ETH = Ethanol content of the target fuel in terms of weight percent oxygen
exp = The function that raises the number e (the base of the natural logarithm) to the power in its domain
Phase I = The years 1995–1999
Phase II = Year 2000 and beyond

(b) *Weightings and baselines for the complex model.* (1) The weightings for normal and higher emitters (w_1 and w_2, respectively) given in table 1 shall be used to calculate the exhaust emission performance of any fuel for the appropriate pollutant and Phase:

TABLE 1—NORMAL AND HIGHER EMITTER WEIGHTINGS FOR EXHAUST EMISSIONS

	Phase I		Phase II	
	VOC & toxics	NO_X	VOC & toxics	NO_X
Normal Emitters (w_1)	0.52	0.82	0.444	0.738
Higher Emitters (w_2)	0.48	0.18	0.556	0.262

(2) The following properties of the baseline fuels shall be used when determining baseline mass emissions of the various pollutants:

TABLE 2—SUMMER AND WINTER BASELINE FUEL PROPERTIES

Fuel property	Summer	Winter
Oxygen (wt %)	0.0	0.0
Sulfur (ppm)	339	338
RVP (psi)	8.7	11.5
E200 (%)	41.0	50.0
E300 (%)	83.0	83.0
Aromatics (vol %)	32.0	26.4
Olefins (vol %)	9.2	11.9
Benzene (vol %)	1.53	1.64

(3) The baseline mass emissions for VOC, NO_X and toxics given in tables 3, 4 and 5 of this paragraph (b)(3) shall be used in conjunction with the complex model during the appropriate Phase and season:

TABLE 3—BASELINE EXHAUST EMISSIONS

Exhaust pollutant	Phase I		Phase II	
	Summer (mg/mile)	Winter (mg/mile)	Summer (mg/mile)	Winter (mg/mile)
VOC	446.0	660.0	907.0	1341.0
NO_x	660.0	750.0	1340.0	1540.0
Benzene	26.10	37.57	53.54	77.62
Acetaldehyde	2.19	3.57	4.44	7.25
Formaldehyde	4.85	7.73	9.70	15.34
1,3-Butadiene	4.31	7.27	9.38	15.84
POM	1.50	2.21	3.04	4.50

TABLE 4—BASELINE NON-EXHAUST EMISSIONS (SUMMER ONLY)

Non-exhaust pollutant	Phase I		Phase II	
	Region 1 (mg/mile)	Region 2 (mg/mile)	Region 1 (mg/mile)	Region 2 (mg/mile)
VOC	860.48	769.10	559.31	492.07

TABLE 4—BASELINE NON-EXHAUST EMISSIONS (SUMMER ONLY)—Continued

Non-exhaust pollutant	Phase I		Phase II	
	Region 1 (mg/mile)	Region 2 (mg/mile)	Region 1 (mg/mile)	Region 2 (mg/mile)
Benzene	9.66	8.63	6.24	5.50

TABLE 5—TOTAL BASELINE VOC, NO_X AND TOXICS EMISSIONS

Pollutant	Summer (mg/mile)				Winter (mg/mile)			
	Phase I		Phase II		Phase I		Phase II	
	Region 1	Region 2	Region 1	Region 2	Region 1	Region 2	Region 1	Region 2
NO_X	660.0	660.0	1340.0	1340.0	750.0	750.0	1540.0	1540.0
VOC	1306.5	1215.1	1466.3	1399.1	660.0	660.0	1341.0	1341.0
Toxics	48.61	47.58	86.34	85.61	58.36	58.36	120.55	120.55

(c) *VOC performance.* (1) The exhaust VOC emissions performance of gasolines shall be given by the following equations:

$$VOCE = VOC(b)+(VOC(b)\times Y_{voc}(t)/100)$$
$$Y_{voc}(t) = [(w_1\times N_v)+(w_2\times H_v)-1]\times 100$$

where

VOCE = Exhaust VOC emissions in milligrams/mile

$Y_{voc}(t)$ = Exhaust VOC performance of the target fuel in terms of percentage change from baseline

VOC(b) = Baseline exhaust VOC emissions as defined in paragraph (b)(2) of this section for the appropriate Phase and season

$N_v = [\exp v_1(t)]/[\exp v_1(b)]$

$H_v = [\exp v_2(t)]/[\exp v_2(b)]$

w_1 = Weighting factor for normal emitters as defined in paragraph (b)(1) of this section for the appropriate Phase

w_2 = Weighting factor for higher emitters as defined in paragraph (b)(1) of this section for the appropriate Phase

$v_1(t)$ = Normal emitter VOC equation as defined in paragraph (c)(1)(i) of this section, evaluated using the target fuel's properties subject to paragraphs (c)(1) (iii) and (iv) of this section

$v_2(t)$ = Higher emitter VOC equation as defined in paragraph (c)(1)(ii) of this section, evaluated using the target fuel's properties subject to paragraphs (c)(1) (iii) and (iv) of this section

$v_1(b)$ = Normal emitter VOC equation as defined in paragraph (c)(1)(i) of this section, evaluated using the base fuel's properties

$v_2(b)$ = Higher emitter VOC equation as defined in paragraph (c)(1)(ii) of this section, evaluated using the base fuel's properties

(i) *Consolidated VOC equation for normal emitters.*

$$v_1 = (-0.003641 \times OXY) + (0.0005219 \times SUL) + (0.0289749 \times RVP) + (-0.014470 \times E200) + (-0.068624 \times E300) + (0.0323712 \times ARO) + (-0.002858 \times OLE) + (0.0001072 \times E2002) + (0.0004087 \times E3002) + (-0.0003481 \times ARO \times E300)$$

(ii) *VOC equation for higher emitters.*

$$v_2 = (-0.003626 \times OXY) + (-5.40X10^{-5} \times SUL) + (0.043295 \times RVP) + (-0.013504 \times E200) + (-0.062327 \times E300) + (0.0282042 \times ARO) + (-0.002858 \times OLE) + (0.000106 \times E200^2) + (0.000408 \times E300^2) + (-0.000287 \times ARO \times E300)$$

(iii) *Flat line extrapolations.* (A) During Phase I, fuels with E200 values greater than 65.83 percent shall be evaluated with the E200 fuel parameter set equal to 65.83 percent when calculating $Y_{voc}(t)$ and VOCE using the equations described in paragraphs (c)(1) (i) and (ii) of this section. Fuels with E300 values greater than E300* (calculated using the equation E300* = 80.32+[0.390×ARO]) shall be evaluated with the E300 parameter set equal to E300* when calculating VOCE using the equations described in paragraphs (c)(1) (i) and (ii) of this section. For E300* values greater than 94, the linearly extrapolated model presented in paragraph (c)(1)(iv) of this section shall be used.

(B) During Phase II, fuels with E200 values greater than 65.52 percent shall be evaluated with the E200 fuel parameter set equal to 65.52 percent when calculating VOCE using the equations described in paragraphs (c)(1) (i) and (ii)

of this section. Fuels with E300 values greater than E300* (calculated using the equation E300* = 79.75+[0.385 × ARO]) shall be evaluated with the E300 parameter set equal to E300* when calculating VOCE using the equations described in paragraphs (c)(1) (i) and (ii) of this section. For E300* values greater than 94, the linearly extrapolated model presented in paragraph (c)(1)(iv) of this section shall be used.

(iv) *Linear extrapolations.* (A) The equations in paragraphs (c)(1) (i) and (ii) of this section shall be used within the allowable range of E300, E200, and ARO for the appropriate Phase, as defined in table 6:

TABLE 6—ALLOWABLE RANGES OF E200, E300, AND ARO FOR THE EXHAUST VOC EQUATIONS IN PARAGRAPHS (C)(1)(I) AND (II) OF THIS SECTION

Fuel parameter	Phase I		Phase II	
	Lower limit	Higher limit	Lower limit	Higher limit
E200 ..	33.00	65.83	33.00	65.52
E300 ..	72.00	Variable[1]	72.00	Variable[2]
ARO ...	18.00	46.00	18.00	46.00

[1] Higher E300 limit = lower of 94.0 or 80.32+[0.390×(ARO)].
[2] Higher E300 limit = lower of 94.0 or 79.75+[0.385×(ARO)].

(B) For fuels with E200, E300 and/or ARO levels outside the ranges defined in table 6, $Y_{VOC}(t)$ shall be defined:

(*1*) For Phase I:

$$Y_{VOC}(t) = 100\% \times 0.52 \times [\exp(v_1(et)) / \exp(v_1(b)) - 1] + 100\% \times 0.48 \times [\exp(v_2(et)) / \exp(v_2(b)) - 1] + \{100\% \times 0.52 \times [\exp(v^1(et)) / \exp(v_1(b))] \times [\{[(0.0002144 \times E200_{et}) - 0.014470] \times \Delta E200\} + \{[(0.0008174 \times E300_{et}) - 0.068624 - (0.000348 \times ARO_{et})] \times \Delta E300\} + \{[(-0.000348 \times E300_{et}) + .0323712] \times \Delta ARO\}]\} + \{100\% \times 0.48 \times [\exp(v_1(et)) / \exp(v_2(b))\}] \times [\{[(0.000212 \times E200_{et}) - 0.01350] \times \Delta E200\} + \{[(0.000816 \times E300_{et}) - 0.06233 - (0.00029 \times ARO_{et})] \times \Delta E300\square + \{[(-0.00029 \times E300\}) + 0.028204] \times \Delta ARO\}]\}$$

(*2*) For Phase II:

$$Y_{VOC}(t) = 100\% \times 0.444 \times [\exp(v_1(et)) / \exp(v_1(b)) - 1] + 100\% \times 0.556 \times [\exp(v_2(et)) / \exp(v_2(b)) - 1] + \{100\% \times 0.444 \times [\exp(v_1(et)) / \exp(v_1(b))] \times [\{[(0.0002144 \times E200_{et}) - 0.014470] \times \Delta E200\} + \{[(0.0008174 \times E300_{et}) - 0.068624 - (0.000348 \times ARO_{et})] \times \Delta E300\} + \{[(-0.000348 \times E300_{et}) + 0.0323712] \times \Delta ARO\}]\} + \{100\% \times 0.556 \times [\exp(v_2(et)) / \exp(v_2(b))] \times [\{[(0.000212 \times E200_{et}) - 0.01350] \times \Delta E200\} + \{[(0.000816 \times E300_{et}) - 0.06233 - (0.00029 \times ARO_{et})] \times \Delta E300\} + \{[(-0.00029 \times E300_{et}) + 0.028204] \times \Delta ARO\}]\}$$

(C) During Phase I, the ''edge target'' fuel shall be identical to the target fuel for all fuel parameters, with the following exceptions:

(*1*) If the E200 level of the target fuel is less than 33 volume percent, then the E200 value for the ''edge target'' fuel shall be set equal to 33 volume percent.

(*2*) If the aromatics level of the target fuel is less than 18 volume percent, then the ARO value for the ''edge target'' fuel shall be set equal to 18 volume percent.

(*3*) If the aromatics level of the target fuel is greater than 46 volume percent, then the ARO value for the ''edge target'' fuel shall be set equal to 46 volume percent.

(*4*) If the E300 level of the target fuel is less than 72 volume percent, then the E300 value for the ''edge target'' fuel shall be set equal to 72 volume percent.

(*5*) If the E300 level of the target fuel is greater than 95 volume percent, then the E300 value of the target fuel shall be set equal to 95 volume percent for the purposes of calculating VOC emissions with the Phase I equation given in paragraph (c)(1)(iv)(B) of this section.

(*6*) If [80.32+(0.390×ARO)] exceeds 94 for the target fuel, then the E300 value for the ''edge target'' fuel shall be set equal to 94 volume percent.

(*7*) If the E200 level of the target fuel is less than 33 volume percent, then ΔE200 shall be set equal to (E200 − 33 volume percent).

(*8*) If the E200 level of the target fuel equals or exceeds 33 volume percent, then ΔE200 shall be set equal to zero.

(*9*) If the aromatics level of the target fuel is less than 18 volume percent, then ΔARO shall be set equal to (ARO − 18 volume percent). If the aromatics level of the target fuel is less than 10 volume percent, then ΔARO shall be set equal to −8 volume percent.

(*10*) If the aromatics level of the target fuel is greater than 46 volume percent, then ΔARO shall be set equal to (ARO − 46 volume percent).

(*11*) If neither of the conditions established in paragraphs (c)(1)(iv)(C)(*9*) and (*10*) of this section are met, then ΔARO shall be set equal to zero.

(*12*) If the E300 level of the target fuel is less than 72 percent, then ΔE300 shall be set equal to (E300 − 72 percent).

(*13*) If the E300 level of the target fuel is greater than 94 volume percent and [80.32+(0.390xARO)] also is greater than 94, then ΔE300 shall be set equal to (E300 − 94 volume percent). If the E300 level of the target fuel is greater than 95 volume percent and [80.32+(0.390×ARO)] also is greater than 94, then ΔE300 shall be set equal to 1 volume percent.

(*14*) If neither of the conditions established in paragraphs (c)(1)(iv)(C)(*12*) and (*13*) of this section are met, then ΔE300 shall be set equal to zero.

(D) During Phase II, the ''edge target'' fuel is identical to the target fuel for all fuel parameters, with the following exceptions:

(*1*) If the E200 level of the target fuel is less than 33 volume percent, then the E200 value for the ''edge target'' fuel shall be set equal to 33 volume percent.

(*2*) If the aromatics level of the target fuel is less than 18 volume percent, then the ARO value for the ''edge target'' fuel shall be set equal to 18 volume percent.

(*3*) If the aromatics level of the target fuel is greater than 46 volume percent, then the ARO value for the ''edge target'' fuel shall be set equal to 46 volume percent.

(*4*) If the E300 level of the target fuel is less than 72 volume percent, then the E300 value for the ''edge target'' fuel shall be set equal to 72 volume percent.

(*5*) If the E300 level of the target fuel is greater than 95 volume percent, then the E300 value of the target fuel shall be set equal to 95 volume percent for the purposes of calculating VOC emissions with the Phase II equation given in paragraph (c)(1)(iv)(B) of this section.

(*6*) If [79.75+(0.385×ARO)] exceeds 94 for the target fuel, then the E300 value for the ''edge target'' fuel shall be set equal to 94 volume percent.

(*7*) If the E200 level of the target fuel is less than 33 volume percent, then ΔE200 shall be set equal to (E200 − 33 volume percent).

(*8*) If the E200 level of the target fuel equals or exceeds 33 volume percent, then ΔE200 shall be set equal to zero.

(*9*) If the aromatics level of the target fuel is less than 18 volume percent and greater than or equal to 10 volume percent, then ΔARO shall be set equal to (ARO − 18 volume percent). If the aromatics level of the target fuel is less than 10 volume percent, then ΔARO shall be set equal to −8 volume percent.

(*10*) If the aromatics level of the target fuel is greater than 46 volume percent, then ΔARO shall be set equal to (ARO − 46 volume percent).

(*11*) If neither of the conditions established in paragraphs (c)(1)(iv)(D)(9) and (10) of this section are met, then ΔARO shall be set equal to zero.

(*12*) If the E300 level of the target fuel is less than 72 percent, then ΔE300 shall be set equal to (E300 − 72 percent).

(*13*) If the E300 level of the target fuel is greater than 94 volume percent and (79.75 + (0.385 × ARO)) also is greater than 94, then ΔE300 shall be set equal to (E300 − 94 volume percent). If the E300 level of the target fuel is greater than 95 volume percent and (79.75 + (0.385 × ARO)) also is greater than 94, then ''E300 shall be set equal to 1 volume percent.

(2) The winter exhaust VOC emissions performance of gasolines shall be given by the equations presented in paragraph (c)(1) of this section with the RVP value set to 8.7 psi for both the baseline and target fuels.

(3) The nonexhaust VOC emissions performance of gasolines in VOC Control Region 1 shall be given by the following equations, where:

VOCNE1 = Total nonexhaust emissions of volatile organic compounds in VOC Control Region 1 in grams per mile

VOCDI1 = Diurnal emissions of volatile organic compounds in VOC Control Region 1 in grams per mile

VOCHS1 = Hot soak emissions of volatile organic compounds in VOC Control Region 1 in grams per mile

VOCRL1 = Running loss emissions of volatile organic compounds in VOC Control Region 1 in grams per mile

VOCRF1 = Refueling emissions of volatile organic compounds in VOC Control Region 1 in grams per mile

(i) During Phase I:

$VOCNE1 = VOCDI1 + VOCHS1 + VOCRL1 + VOCRF1$
$VOCDI1 = [0.00736 \times (RVP^2)] - [0.0790 \times RVP] + 0.2553$
$VOCHS1 = [0.01557 \times (RVP^2)] - [0.1671 \times RVP] + 0.5399$
$VOCRL1 = [0.00279 \times (RVP^2)] + [0.1096 \times RVP] - 0.7340$
$VOCRF1 = [0.006668 \times RVP] - 0.0180$

(ii) During Phase II:

$VOCNE1 = VOCDI1 + VOCHS1 + VOCRL1 + VOCRF1$
$VOCDI1 = [0.007385 \times (RVP^2)] - [0.08981 \times RVP] + 0.3158$
$VOCHS1 = [0.006654 \times (RVP^2)] - [0.08094 \times RVP] + 0.2846$
$VOCRL1 = [0.017768 \times (RVP^2)] - [0.18746 \times RVP] + 0.6146$
$VOCRF1 = [0.004767 \times RVP] + 0.011859$

(4) The nonexhaust VOC emissions performance of gasolines in VOC Control Region 2 shall be given by the following equations, where:

VOCNE2 = Total nonexhaust emissions of volatile organic compounds in VOC Control Region 2 in grams per mile
VOCDI2 = Diurnal emissions of volatile organic compounds in VOC Control Region 2 in grams per mile
VOCHS2 = Hot soak emissions of volatile organic compounds in VOC Control Region 2 in grams per mile
VOCRL2 = Running loss emissions of volatile organic compounds in VOC Control Region 2 in grams per mile
VOCRF2 = Refueling emissions of volatile organic compounds in VOC Control Region 2 in grams per mile

(i) During Phase I:

$VOCNE2 = VOCDI2 + VOCHS2 + VOCRL2 + VOCRF2$
$VOCDI2 = [0.006818 \times (RVP^2)] - [0.07682 \times RVP] + 0.2610$
$VOCHS2 = [0.014421 \times (RVP^2)] - [0.16248 \times RVP] + 0.5520$
$VOCRL2 = [0.016255 \times (RVP^2)] - [0.1306 \times RVP] + 0.2963$
$VOCRF2 = [0.006668 \times RVP] - 0.0180$

(ii) During Phase II:

$VOCNE2 = VOCDI2 + VOCHS2 + VOCRL2 + VOCRF2$
$VOCDI2 = [0.004775 \times (RVP^2)] - [0.05872 \times RVP] + 0.21306$
$VOCHS2 = [0.006078 \times (RVP^2)] - [0.07474 \times RVP] + 0.27117$
$VOCRL2 = [0.016169 \times (RVP^2)] - [0.17206 \times RVP] + 0.56724$
$VOCRF2 = [0.004767 \times RVP] + 0.011859$

(5) Winter VOC emissions shall be given by VOCE, as defined in paragraph (c)(2) of this section, using the appropriate baseline emissions given in paragraph (b)(3) of this section. Total nonexhaust VOC emissions shall be set equal to zero under winter conditions.

(6) *Total VOC emissions.* (i) Total summer VOC emissions shall be given by the following equations:

$VOCS1 = (VOCE / 1000) + VOCNE1$
$VOCS2 = (VOCE / 1000) + VOCNE2$
VOCS1 = Total summer VOC emissions in VOC Control Region 1 in terms of grams per mile
VOCS2 = Total summer VOC emissions in VOC Control Region 2 in terms of grams per mile

(ii) Total winter VOC emissions shall be given by the following equations:

$VOCW = (VOCE/1000)$
VOCW = Total winter VOC emissions in terms of grams per mile

(7) *Phase I total VOC emissions performance.* (i) The total summer VOC emissions performance of the target fuel in percentage terms from baseline levels shall be given by the following equations during Phase I:

$VOCS1\% = [100\% \times (VOCS1 - 1.306\ g/mi)]/(1.306\ g/mi)$
$VOCS2\% = [100\% \times (VOCS2 - 1.215\ g/mi)]/(1.215\ g/mi)$
VOC1% = Percentage change in VOC emissions from baseline levels in VOC Control Region 1
VOC2% = Percentage change in VOC emissions from baseline levels in VOC Control Region 2

(ii) The total winter VOC emissions performance of the target fuel in percentage terms from baseline levels shall be given by the following equations during Phase I:

$VOCW\% = [100\% \times (VOCW - 0.660\ g/mi)]/(0.660\ g/mi)$
VOCW% = Percentage change in winter VOC emissions from baseline levels

(8) *Phase II total VOC emissions performance.* (i) The total summer VOC emissions performance of the target fuel in percentage terms from baseline levels shall be given by the following equations during Phase II:

$VOCS1\% = [100\% \times (VOCS1 - 1.4663\ g/mi)]/(1.4663\ g/mi)$
$VOCS2\% = [100\% \times (VOCS2 - 1.3991\ g/mi)]/(1.3991\ g/mi)$

(ii) The total winter VOC emissions performance of the target fuel in percentage terms from baseline levels shall be given by the following equation during Phase II:

$$VOCW\% = [100\% \times (VOC - 1.341\ g/mi)] / (1.341\ g/mi)$$

(d) *NO_X performance.* (1) The summer NO_X emissions performance of gasolines shall be given by the following equations:

$$NO_X = NO_X(b) + [NO_X(b) \times Y(t)/100]$$
$$Y_{NOX}(t) = \beta(w_1 \times N_n) + (w_2 \times H_n) - 1\alpha \times 100$$

where

NO_X = NO_X emissions in milligrams/mile
$Y_{NOx}(t)$ = NO_X performance of target fuel in terms of percentage change from baseline
$NO_X(b)$ = Baseline NO_X emissions as defined in paragraph (b)(2) of this section for the appropriate phase and season
$N_n = \exp n_1(t)/\exp n_1(b)$
$H_n = \exp n_2(t)/\exp n_2(b)$
w_1 = Weighting factor for normal emitters as defined in paragraph (b)(1) of this section for the appropriate Phase
w_2 = Weighting factor for higher emitters as defined in paragraph (b)(1) of this section for the appropriate Phase
$n_1(t)$ = Normal emitter NO_X equation as defined in paragraph (d)(1)(i) of this section, evaluated using the target fuel's properties subject to paragraphs (d)(1)(iii) and (iv) of this section
$n_2(t)$ = Higher emitter NO_X equation as defined in paragraph (d)(1)(ii) of this section, evaluated using the target fuel's properties subject to paragraphs (d)(1)(iii) and (iv) of this section
$n_1(b)$ = Normal emitter NO_X equation as defined in paragraph (d)(1)(i) of this section, evaluated using the base fuel's properties
$n_2(b)$ = Higher emitter NO_X equation as defined in paragraph (d)(1)(ii) of this section, evaluated using the base fuel's properties

(i) *Consolidated equation for normal emitters.*

$$n_1 = (0.0018571 \times OXY) + (0.0006921 \times SUL) + (0.0090744 \times RVP) + (0.0009310 \times E200) + (0.0008460 \times E300) + (0.0083632 \times ARO) + (-0.002774 \times OLE) + (-6.63X10^{-7} \times SUL^2) + (-0.000119 \times ARO^2) + (0.0003665 \times OLE^2)$$

(ii) *Equation for higher emitters.*

$$n_2 = (-0.00913 \times OXY) + (0.000252 \times SUL) + (-0.01397 \times RVP) + (0.000931 \times E200) + (-0.00401 \times E300) + (0.007097 \times ARO) + (-0.00276 \times OLE) + (0.0003665 \times OLE^2) + (-7.995x10^{-5} \times ARO^2)$$

(iii) *Flat line extrapolations.* (A) During Phase I, fuels with olefin levels less than 3.77 volume percent shall be evaluated with the OLE fuel parameter set equal to 3.77 volume percent when calculating NO_X performance using the equations described in paragraphs (d)(1)(i) and (ii) of this section. Fuels with aromatics levels greater than 36.2 volume percent shall be evaluated with the ARO fuel parameter set equal to 36.2 volume percent when calculating NO_X performance using the equations described in paragraphs (d)(1)(i) and (ii) of this section.

(B) During Phase II, fuels with olefin levels less than 3.77 volume percent shall be evaluated with the OLE fuel parameter set equal to 3.77 volume percent when calculating NO_X performance using the equations described in paragraphs (d)(1)(i) and (ii) of this section. Fuels with aromatics levels greater than 36.8 volume percent shall be evaluated with the ARO fuel parameter set equal to 36.8 volume percent when calculating NO_X performance using the equations described in paragraphs (d)(1)(i) and (ii) of this section.

(iv) *Linear extrapolations.* (A) The equations in paragraphs (d)(1)(i) and (ii) of this section shall be used within the allowable range of SUL, OLE, and ARO for the appropriate Phase, as defined in the following table 7:

TABLE 7—ALLOWABLE RANGES OF SUL, OLE, AND ARO FOR THE NO_X EQUATIONS IN PARAGRAPHS/(D)(1)(I) AND (II) OF THIS SECTION

Fuel parameter	Phase I		Phase II	
	Low end	High end	Low end	High end
SUL	10.0	450.0	10.0	450.0
OLE	3.77	19.0	3.77	19.0
ARO	18.0	36.2	18.0	36.8

(B) For fuels with SUL, OLE, and/or ARO levels outside the ranges defined in table 7 of paragraph (d)(1)(iv)(A) of this section, $Y_{nox}(t)$ shall be defined as:

(*1*) For Phase I:

$$Y_{Nox}(t) = 100\% \times 0.82 \times [\exp(n_1(et)) / \exp(n_1(b)) - 1] + 100\% \times 0.18 \times [\exp(n_2(et))/\exp(n_2(b)) - 1] + \{100\% \times 0.82 \times [\exp(n_1(et)) / \exp(n_1(b))] \times [\{[(-0.00000133 \times SUL_{et}) + 0.000692] \times \Delta SUL\} + \{[(-0.000238 \times ARO_{et}) + 0.0083632] \times ARO\} + \{[(0.000733 \times OLE_{et})$$

$- 0.002774] \times \Delta OLE\}]\} + \{100\% \times 0.18 \times [\exp(n_2(et)) / \exp(n_2(b))] \times [\{0.000252 \times \Delta SUL\} + \{[(-0.0001599 \times ARO_{et}) + 0.007097] \times \Delta ARO\} + \{[(0.000732 \times OLE_{et}) - 0.00276] \times \Delta OLE\{]\}$

(*2*) For Phase II:

(C) For both Phase I and Phase II, the ''edge target'' fuel is identical to the target fuel for all fuel parameters, with the following exceptions:

(*1*) If the sulfur level of the target fuel is less than 10 parts per million, then the value of SUL for the ''edge target'' fuel shall be set equal to 10 parts per million.

(*2*) If the sulfur level of the target fuel is greater than 450 parts per million, then the value of SUL for the ''edge target'' fuel shall be set equal to 450 parts per million.

(*3*) If the aromatics level of the target fuel is less than 18 volume percent, then the value of ARO for the ''edge target'' fuel shall be set equal to 18 volume percent.

(*4*) If the olefins level of the target fuel is greater than 19 volume percent, then the value of OLE for the ''edge target'' fuel shall be set equal to 19 volume percent.

(*5*) If the E300 level of the target fuel is greater than 95 volume percent, then the E300 value of the target fuel shall be set equal to 95 volume percent for the purposes of calculating NO_X emissions with the equations given in paragraph (d)(1)(iv)(B) of this section.

(*6*) If the sulfur level of the target fuel is less than 10 parts per million, then ΔSUL shall be set equal to (SUL − 10 parts per million).

(*7*) If the sulfur level of the target fuel is greater than 450 parts per million, then ΔSUL shall be set equal to (SUL − 450 parts per million).

(*8*) If the sulfur level of the target fuel is neither less than 10 parts per million nor greater than 450 parts per million, ΔSUL shall be set equal to zero.

(*9*) If the aromatics level of the target fuel is less than 18 volume percent and greater than 10 volume percent, then ΔARO shall be set equal to (ARO − 18 volume percent). If the aromatics level of the target fuel is less than 10 volume percent, then ΔARO shall be set equal to −8 volume percent.

(*10*) If the aromatics level of the target fuel is greater than or equal to 18 volume percent, then ΔARO shall be set equal to zero.

(*11*) If the olefins level of the target fuel is greater than 19 volume percent, then ΔOLE shall be set equal to (OLE − 19 volume percent).

(*12*) If the olefins level of the target fuel is less than or equal to 19 volume percent, then ΔOLE shall be set equal to zero.

(2) The winter NO_X emissions performance of gasolines shall be given by the equations presented in paragraph (d)(1) of this section with the RVP value set to 8.7 psi.

(3) The NO_X emissions performance of the target fuel in percentage terms from baseline levels shall be given by the following equations:

For Phase I:

Summer $NO_X\% = [100\% \times (NO_X - 0.660\ g/mi)]/(0.660\ g/mi)$

Winter $NO_X\% = [100\% \times (NO_X - 0.750\ g/mi)]/(0.750\ g/mi)$

For Phase II:

Summer $NO_X\% = [100\% \times (NO_X - 1.340\ g/mi)]/(1.340\ g/mi)$

Winter $NO_X\% = [100\% \times (NO_X - 1.540\ g/mi)]/(1.540\ g/mi)$

Summer $NO_X\%$ = Percentage change in NO_X emissions from summer baseline levels

Winter $NO_X\%$ = Percentage change in NO_X emissions from winter baseline levels

(e) *Toxics performance*—(1) *Summer toxics performance*. (i) Summer toxic emissions performance of gasolines in VOC Control Regions 1 and 2 shall be given by the following equations:

TOXICS1 = EXHBZ + FORM + ACET + BUTA + POM + NEBZ1

TOXICS2 = EXHBZ + FORM + ACET + BUTA + POM + NEBZ2

where

TOXICS1 = Summer toxics performance in VOC Control Region 1 in terms of milligrams per mile.

TOXICS2 = Summer toxics performance in VOC Control Region 2 in terms of milligrams per mile.

EXHBZ = Exhaust emissions of benzene in terms of milligrams per mile, as determined in paragraph (e)(4) of this section.
FORM = Emissions of formaldehyde in terms of milligrams per mile, as determined in paragraph (e)(5) of this section.
ACET = Emissions of acetaldehyde in terms of milligrams per mile, as determined in paragraph (e)(6) of this section.
BUTA = Emissions of 1,3-butadiene in terms of milligrams per mile, as determined in paragraph (e)(7) of this section.
POM = Polycyclic organic matter emissions in terms of milligrams per mile, as determined in paragraph (e)(8) of this section.
NEBZ1 = Nonexhaust emissions of benzene in VOC Control Region 1 in milligrams per mile, as determined in paragraph (e)(9) of this section.
NEBZ2 = Nonexhaust emissions of benzene in VOC Control Region 2 in milligrams per mile, as determined in paragraph (e)(10) of this section.

(ii) The percentage change in summer toxics performance in VOC Control Regions 1 and 2 shall be given by the following equations:

For Phase I:

TOXICS1% = [100% × (TOXICS1 − 48.61 mg/mi)]/(48.61 mg/mi)
TOXICS2% = [100% × (TOXICS2 − 47.58 mg/mi)] / (47.58 mg/mi)

For Phase II:

TOXICS1% = [100% × (TOXICS1 − 86.34 mg/mi)] / (86.34 mg/mi)
TOXICS2% = [100% × (TOXICS2 − 85.61 mg/mi)]/(85.61 mg/mi)

where
TOXICS1% = Percentage change in summer toxics emissions in VOC Control Region 1 from baseline levels.
TOXICS2% = Percentage change in summer toxics emissions in VOC Control Region 2 from baseline levels.

(2) *Winter toxics performance.* (i) Winter toxic emissions performance of gasolines in VOC Control Regions 1 and 2 shall be given by the following equation, evaluated with the RVP set at 8.7 psi:

TOXICW = [EXHBZ + FORM + ACET + BUTA + POM]

where
TOXICW = Winter toxics performance in VOC Control Regions 1 and 2 in terms of milligrams per mile.
EXHBZ = Exhaust emissions of benzene in terms of milligrams per mile, as determined in paragraph (e)(4) of this section.
FORM = Emissions of formaldehyde in terms of milligrams per mile, as determined in paragraph (e)(5) of this section.
ACET = Emissions of acetaldehyde in terms of milligrams per mile, as determined in paragraph (e)(6) of this section.
BUTA = Emissions of 1,3-butadiene in terms of milligrams per mile, as determined in paragraph (e)(7) of this section.
POM = Polycyclic organic matter emissions in terms of milligrams per mile, as determined in paragraph (e)(8) of this section.

(ii) The percentage change in winter toxics performance in VOC Control Regions 1 and 2 shall be given by the following equation:

For Phase I:

TOXICW% = [100%×(TOXICW − 58.36 mg/mi)] / (58.36 mg/mi)

For Phase II:

TOXICW% = [100%×(TOXICW − 120.55 mg/mi)] / (120.55 mg/mi)

where
TOXICW% = Percentage change in winter toxics emissions in VOC Control Regions 1 and 2 from baseline levels.

(3) The year-round toxics performance in VOC Control Regions 1 and 2 shall be derived from volume-weighted performances of individual batches of fuel as described in § 80.67(g).

(4) Exhaust benzene emissions shall be given by the following equation, subject to paragragh (e)(4)(iii) of this section:

EXHBZ = BENZ(b) + (BENZ(b) × $Y_{BEN}(t)/100$)
$Y_{BEN}(t) = \beta(w_1 \times N_b) + (w_2 \times H_b) - 1\alpha \times 100$

where
EXHBZ = Exhaust benzene emissions in milligrams/mile
$Y_{BEN}(t)$ = Benzene performance of target fuel in terms of percentage change from baseline.
BENZ(b) = Baseline benzene emissions as defined in paragraph (b)(2) of this section for the appropriate phase and season.
$N_b = \exp b_1(t)/\exp b_1(b)$
$H_b = \exp b_2(t)/\exp b_2(b)$
w_1 = Weighting factor for normal emitters as defined in paragraph (b)(1) of this section for the appropriate Phase.
w_2 = Weighting factor for higher emitters as defined in paragraph (b)(1) of this section for the appropriate Phase.
$b_1(t)$ = Normal emitter benzene equation, as defined in paragraph (e)(4)(i) of this section, evaluated using the target fuel's

properties subject to paragraph (e)(4)(iii) of this section.

$b_2(t)$ = Higher emitter benzene equation as defined in paragraph (e)(4)(ii) of this section, evaluated using the target fuel's properties subject to paragraph (e)(4)(iii) of this section.

$b_1(b)$ = Normal emitter benzene equation as defined in paragraph (e)(4)(i) of this section, evaluated for the base fuel's properties.

$b_2(b)$ = Higher emitter benzene equation, as defined in paragraph (e)(4)(ii) of this section, evaluated for the base fuel's properties.

(i) *Consolidated equation for normal emitters.*

$$b_1 = (0.0006197 \times SUL) + (-0.003376 \times E200) + (0.0265500 \times ARO) + (0.2223900 \times BEN)$$

(ii) *Equation for higher emitters.*

$$b_2 = (-0.096047 \times OXY) + (0.0003370 \times SUL) + (0.0112510 \times E300) + (0.0118820 \times ARO) + (0.2223180 \times BEN)$$

(iii) If the aromatics value of the target fuel is less than 10 volume percent, then an aromatics value of 10 volume percent shall be used when evaluating the equations given in paragraphs (e)(4)(i) and (ii) of this section. If the E300 value of the target fuel is greater than 95 volume percent, then an E300 value of 95 volume percent shall be used when evaluating the equations in paragraphs (e)(4)(i) and (ii) of this section.

(5) Formaldehyde mass emissions shall be given by the following equation, subject to paragraphs (e)(5) (iii) and (iv) of this section:

$$FORM = FORM(b) + (FORM(b) \times Y_{FORM}(t) / 100)$$

$$Y_{FORM}(t) = [(w_1 \times N_f) + (w_2 \times H_f) - 1] \times 100$$

where

FORM = Exhaust formaldehyde emissions in terms of milligrams/mile.

$Y_{FORM}(t)$ = Formaldehyde performance of target fuel in terms of percentage change from baseline.

FORM(b) = Baseline formaldehyde emissions as defined in paragraph (b)(2) of this section for the appropriate Phase and season.

$N_f = \exp f_1(t)/\exp f_1(b)$

$H_f = \exp f_2(t)/\exp f_2(b)$

w_1 = Weighting factor for normal emitters as defined in paragraph (b)(1) of this section for the appropriate Phase.

w_2 = Weighting factor for higher emitters as defined in paragraph (b)(1) of this section for the appropriate Phase.

$f_1(t)$ = Normal emitter formaldehyde equation as defined in paragraph (e)(5)(i) of this section, evaluated using the target fuel's properties subject to paragraphs (e)(5) (iii) and (iv) of this section.

$f_2(t)$ = Higher emitter formaldehyde equation as defined in paragraph (e)(5)(ii) of this section, evaluated using the target fuel's properties subject to paragraphs (e)(5) (iii) and (iv) of this section.

$f_1(b)$ = Normal emitter formaldehyde equation as defined in paragraph (e)(5)(i) of this section, evaluated for the base fuel's properties.

$f_2(b)$ = Higher emitter formaldehyde equation as defined in paragraph (e)(5)(ii) of this section, evaluated for the base fuel's properties.

(i) *Consolidated equation for normal emitters.*

$$f_1 = (-0.010226 \times E300) + (-0.007166 \times ARO) + (0.0462131 \times MTB)$$

(ii) *Equation for higher emitters.*

$$f_2 = (-0.010226 \times E300) + (-0.007166 \times ARO) + (-0.031352 \times OLE) + (0.0462131 \times MTB)$$

(iii) If the aromatics value of the target fuel is less than 10 volume percent, then an aromatics value of 10 volume percent shall be used when evaluating the equations given in paragraphs (e)(5) (i) and (ii) of this section. If the E300 value of the target fuel is greater than 95 volume percent, then an E300 value of 95 volume percent shall be used when evaluating the equations given in paragraphs (e)(5) (i) and (ii) of this section.

(iv) When calculating formaldehyde emissions and emissions performance, oxygen in the form of alcohols which are more complex or have higher molecular weights than ethanol shall be evaluated as if it were in the form of ethanol. Oxygen in the form of methyl ethers other than TAME and MTBE shall be evaluated as if it were in the form of MTBE. Oxygen in the form of ethyl ethers other than ETBE shall be evaluated as if it were in the form of ETBE. Oxygen in the form of non-methyl, non-ethyl ethers shall be evaluated as if it were in the form of ETBE. Oxygen in the form of methanol or non-alcohol, non-ether oxygenates

shall not be evaluated with the Complex Model, but instead must be evaluated through vehicle testing per § 80.48.

(6) Acetaldehyde mass emissions shall be given by the following equation, subject to paragraphs (e)(6) (iii) and (iv) of this section:

$$ACET = ACET(b) + (ACET(b) \times Y_{ACET}(t)/100)$$

$$Y_{ACET}(t) = [(w_1 \times N_a) + (w_2 \times H_a) - 1] \times 100$$

where

ACET = Exhaust acetaldehyde emissions in terms of milligrams/mile

$Y_{ACET}(t)$ = Acetaldehyde performance of target fuel in terms of percentage change from baseline

ACET(b) = Baseline acetaldehyde emissions as defined in paragraph (b)(2) of this section for the appropriate phase and season

$N_a = \exp a_1(t)/\exp a_1(b)$

$H_a = \exp a_2(t)/\exp a_2(b)$

w_1 = Weighting factor for normal emitters as defined in paragraph (b)(1) of this section for the appropriate phase

w_2 = Weighting factor for higher emitters as defined in paragraph (b)(1) of this section for the appropriate phase

$a_1(t)$ = Normal emitter acetaldehyde equation as defined in paragraph (e)(6)(i) of this section, evaluated using the target fuel's properties, subject to paragraphs (e)(6) (iii) and (iv) of this section

$a_2(t)$ = Higher emitter acetaldehyde equation as defined in paragraph (e)(6)(ii) of this section, evaluated using the target fuel's properties, subject to paragraphs (e)(6) (iii) and (iv) of this section

$a_1(b)$ = Normal emitter acetaldehyde equation as defined in paragraph (e)(6)(i) of this section, evaluated for the base fuel's properties

$f_2(b)$ = Higher emitter acetaldehyde equation as defined in paragraph (e)(6)(ii) of this section, evaluated for the base fuel's properties

(i) *Consolidated equation for normal emitters.*

$$a_1 = (0.0002631 \times SUL) + (0.0397860 \times RVP) + (-0.012172 \times E300) + (-0.005525 \times ARO) + (-0.009594 \times MTB) + (0.3165800 \times ETB) + (0.2492500 \times ETH)$$

(ii) *Equation for higher emitters.*

$$a_2 = (0.0002627 \times SUL) + (-0.012157 \times E300) + (-0.005548 \times ARO) + (-0.055980 \times MTB) + (0.3164665 \times ETB) + (0.2493259 \times ETH)$$

(iii) If the aromatics value of the target fuel is less than 10 volume percent, then an aromatics value of 10 volume percent shall be used when evaluating the equations given in paragraphs (e)(6) (i) and (ii) of this section. If the E300 value of the target fuel is greater than 95 volume percent, then an E300 value of 95 volume percent shall be used when evaluating the equations given in paragraphs (e)(6) (i) and (ii) of this section.

(iv) When calculating acetaldehyde emissions and emissions performance, oxygen in the form of alcohols which are more complex or have higher molecular weights than ethanol shall be evaluated as if it were in the form of ethanol. Oxygen in the form of methyl ethers other than TAME and MTBE shall be evaluated as if it were in the form of MTBE. Oxygen in the form of ethyl ethers other than ETBE shall be evaluated as if it were in the form of ETBE. Oxygen in the form of non-methyl, non-ethyl ethers shall be evaluated as if it were in the form of ETBE. Oxygen in the form of methanol or non-alcohol, non-ether oxygenates shall not be evaluated with the Complex Model, but instead must be evaluated through vehicle testing per § 80.48.

(7) 1,3-butadiene mass emissions shall be given by the following equations, subject to paragraph (e)(7)(iii) of this section:

$$BUTA = BUTA(b) + (BUTA(b) \times Y_{BUTA}(t)/100)$$

$$Y_{BUTA}(t) = [(w_1 \times N_d) + (w_2 \times H_d) - 1] \times 100$$

where

BUTA = Exhaust 1,3-butadiene emissions in terms of milligrams/mile

$Y_{BUTA}(t)$ = 1,3-butadiene performance of target fuel in terms of percentage change from baseline

BUTA(b) = Baseline 1,3-butadiene emissions as defined in paragraph (b)(2) of this section for the appropriate phase and season

$N_d = \exp d_1(t)/\exp d_1(b)$

$H_d = \exp d_2(t)/\exp d_2(b)$

w_1 = eighting factor for normal emitters as defined in paragraph (b)(1) of this section for the appropriate phase

w_2 = Weighting factor for higher emitters as defined in paragraph (b)(1) of this section for the appropriate Phase.

$d_1(t)$ = Normal emitter 1,3-butadiene equation as defined in paragraph (e)(7)(i) of this section, evaluated using the target fuel's properties, subject to paragraph (e)(7)(iii) of this section.

$d_2(t)$ = Higher emitter 1,3-butadiene equation as defined in paragraph (e)(7)(ii) of this section, evaluated using the target fuel's properties, subject to paragraph (e)(7)(iii) of this section.

$d_1(b)$ = Normal emitter 1,3-butadiene equation as defined in paragraph (e)(7)(i) of this section, evaluated for the base fuel's properties.

$d_2(b)$ = Higher emitter 1,3-butadiene equation as defined in paragraph (e)(7)(ii) of this section, evaluated for the base fuel's properties.

(i) *Consolidated equation for normal emitters.*

$$d_1 = (0.0001552 \times SUL) + (-0.007253 \times E200) + (-0.014866 \times E300) + (-0.004005 \times ARO) + (0.0282350 \times OLE)$$

(ii) *Equation for higher emitters.*

$$d_2 = (-0.060771 \times OXY) + (-0.007311 \times E200) + (-0.008058 \times E300) + (-0.004005 \times ARO) + (0.0436960 \times OLE)$$

(iii) If the aromatics value of the target fuel is less than 10 volume percent, then an aromatics value of 10 volume percent shall be used when evaluating the equations given in paragraphs (e)(7)(i) and (ii) of this section. If the E300 value of the target fuel is greater than 95 volume percent, then an E300 value of 95 volume percent shall be used when evaluating the equations given in paragraphs (e)(7) (i) and (ii) of this section.

(8) Polycyclic organic matter mass emissions shall be given by the following equation:

$$POM = 0.003355 \times VOCE$$

POM = Polycyclic organic matter emissions in terms of milligrams per mile

VOCE = Non-methane, non-ethane exhaust emissions of volatile organic compounds in grams per mile.

(9) Nonexhaust benzene emissions in VOC Control Region 1 shall be given by the following equations for both Phase I and Phase II:

$$NEBZ1 = DIBZ1 + HSBZ1 + RLBZ1 + RFBZ1$$

$$HSBZ1 = 10 \times BEN \times VOCHS1 \times [(-0.0342 \times MTB) + (-0.080274 \times RVP) + 1.4448]$$

$$DIBZ1 = 10 \times BEN \times VOCD11 \times [(-0.0290 \times MTB) + (-0.080274 \times RVP) + 1.3758]$$

$$RLBZ1 = 10 \times BEN \times VOCRL1 \times [(-0.0342 \times MTB) + (-0.080274 \times RVP) + 1.4448]$$

$$RFBZ1 = 10 \times BEN \times VOCRF1 \times [(-0.0296 \times MTB) + (-0.081507 \times RVP) + 1.3972$$

where

NEBZ1 = Nonexhaust emissions of volatile organic compounds in VOC Control Region 1 in milligrams per mile.

DIBZ1 = Diurnal emissions of volatile organic compounds in VOC Control Region 1 in milligrams per mile.

HSBZ1 = Hot soak emissions of volatile organic compounds in VOC Control Region 1 in milligrams per mile.

RLBZ1 = Running loss emissions of volatile organic compounds in VOC Control Region 1 in milligrams per mile.

RFBZ1 = Refueling emissions of volatile organic compounds in VOC Control Region 1 in grams per mile.

VOCDI1 = Diurnal emissions of volatile organic compounds in VOC Control Region 1 in milligrams per mile, as determined in paragraph (c)(3) of this section.

VOCHS1 = Hot soak emissions of volatile organic compounds in VOC Control Region 1 in milligrams per mile, as determined in paragraph (c)(3) of this section.

VOCRL1 = Running loss emissions of volatile organic compounds in VOC Control Region 1 in milligrams per mile, as determined in paragraph (c)(3) of this section.

VOCRF1 = Refueling emissions of volatile organic compounds in VOC Control Region 1 in milligrams per mile, as determined in paragraph (c)(3) of this section.

(10) Nonexhaust benzene emissions in VOC Control Region 2 shall be given by the following equations for both Phase I and Phase II:

$$NEBZ2 = DIBZ2 + HSBZ2 + RLBZ2 + RFBZ2$$

$$HSBZ2 = 10 \times BEN \times VOCHS2 \times [(-0.0342 \times MTB) + (-0.080274 \times RVP) + 1.4448]$$

$$DIBZ2 = 10 \times BEN \times VOCD12 \times [(-0.0290 \times MTB) + (-0.080274 \times RVP) + 1.3758]$$

$$RLBZ2 = 10 \times BEN \times VOCRL2 \times [(-0.0342 \times MTB) + (-0.080274 \times RVP) + 1.4448]$$

$$RFBZ2 = 10 \times BEN \times VOCRF2 \times [(-0.0296 \times MTB) + (-0.081507 \times RVP) + 1.3972$$

where

NEBZ2 = Nonexhaust emissions of volatile organic compounds in VOC Control Region 2 in milligrams per mile.

DIBZ2 = Diurnal emissions of volatile organic compounds in VOC Control Region 2 in milligrams per mile.

HSBZ2 = Hot soak emissions of volatile organic compounds in VOC Control Region 2 in milligrams per mile.

RLBZ2 = Running loss emissions of volatile organic compounds in VOC Control Region 2 in milligrams per mile.

RFBZ2 = Refueling emissions of volatile organic compounds in VOC Control Region 2 in grams per mile.

VOCDI2 = Diurnal emissions of volatile organic compounds in VOC Control Region 2 in milligrams per mile, as determined in paragraph (c)(4) of this section.
VOCHS2 = Hot soak emissions of volatile organic compounds in VOC Control Region 2 in milligrams per mile, as determined in paragraph (c)(4) of this section.
VOCRL2 = Running loss emissions of volatile organic compounds in VOC Control Region 2 in milligrams per mile, as determined in paragraph (c)(4) of this section.
VOCRF2 = Refueling emissions of volatile organic compounds in VOC Control Region 2 in milligrams per mile, as determined in paragraph (c)(4) of this section.

(f) *Limits of the model.* (1) The equations described in paragraphs (c), (d), and (e) of this section shall be valid only for fuels with fuel properties that fall in the following ranges for reformulated gasolines and conventional gasolines:

(i) For reformulated gasolines:

Fuel property	Acceptable range
Oxygen	0.0–4.0 weight percent.
Sulfur	0.0–500.0 parts per million by weight.
RVP	6.4–10.0 pounds per square inch.
E200	30.0–70.0 percent evaporated.
E300	70.0–100.0 percent evaporated.
Aromatics	0.0–50.0 volume percent.
Olefins	0.0–25.0 volume percent.
Benzene	0.0–2.0 volume percent.

(ii) For conventional gasoline:

Fuel property	Acceptable range
Oxygen	0.00–4.0 weight percent.
Sulfur	0.0–1000.0 parts per million by weight.
RVP	6.4–11.0 pounds per square inch.
E200	30.0–70.0 evaporated percent.
E300	70.0–100.0 evaporated percent.
Aromatics	0.0–55.0 volume percent.
Olefins	0.0–30.0 volume percent.
Benzene	0.0–4.9 volume percent.

(2) Fuels with one or more properties that do not fall within the ranges described in above shall not be certified or evaluated for their emissions performance using the complex emissions model described in paragraphs (c), (d), and (e) of this section.

[59 FR 7813, Feb. 16, 1994, as amended at 59 FR 36959, July 20, 1994; 62 FR 68206, Dec. 31, 1997]

§ 80.46 Measurement of reformulated gasoline fuel parameters.

(a) *Sulfur.* Sulfur content of gasoline and butane must be determined by use of the following methods:

(1) The sulfur content of gasoline must be determined by use of American Society for Testing and Materials (ASTM) standard method D 2622–98, entitled ''Standard Test Method for Sulfur in Petroleum Products by Wavelength Dispersive X-ray Fluorescence Spectrometry.''

(2) The sulfur content of butane must be determined by the use of ASTM standard method D 3246–96, entitled ''Standard Test Method for Sulfur in Petroleum Gas by Oxidative Microcoulometry.''

(b) *Olefins.* Olefin content shall be determined using ASTM standard method D–1319–93, entitled ''Standard Test Method for Hydrocarbon Types in Liquid Petroleum Products by Fluorescent Indicator Adsorption.''

(c) *Reid vapor pressure (RVP).* Reid Vapor Pressure (RVP) shall be determined using the procedure described in 40 CFR part 80, appendix E, Method 3.

(d) *Distillation.* (1) Distillation parameters shall be determined using ASTM standard method D–86–90, entitled ''Standard Test Method for Distillation of Petroleum Products''; except that

(2) The figures for repeatability and reproducibility given in degrees Fahrenheit in table 9 in the ASTM method are incorrect, and shall not be used.

(e) *Benzene.* (1) Benzene content shall be determined using ASTM standard method D–3606–99, entitled ''Standard Test Method for Determination of Benzene and Toluene in Finished Motor and Aviation Gasoline by Gas Chromatography''; except that

(2) Instrument parameters shall be adjusted to ensure complete resolution of the benzene, ethanol and methanol peaks because ethanol and methanol may cause interference with ASTM standard method D–3606–99 when present.

(f) *Aromatics.* Aromatics content shall be determined by gas chromatography identifying and quantifying each aromatic compound as set forth in paragraph (f)(1) of this section.

(1)(i) *Detector.* The detector is an atomic mass spectrometer detector (MSD). The detector may be set for either selective ion or scan mode.

(ii) *Method A.* (A) The initial study of this method used a three component

internal standard using the following calculations.

(B) The calibration points are constructed by calculating an amount ratio and response ratio for each level of a particular peak in the instrument's calibration table.

(C) The amount ratio is the amount of the compound divided by the amount of the internal standard for a given level.

(D) The response ratio is the response of the compound divided by the response of the internal standard at this level.

(E) The equation for the curve through the calibration points is calculated using the type fit and origin handling specified in the instrument's calibration table. In the initial study the fit was a second degree polynomial including a forced zero for the origin.

(F) The response of the compound in a sample is divided by the response of the internal standard to provide a response ratio for that compound in the sample.

(G) A corrected amount ratio for the unknown is calculated using the curve fit equation determined in paragragh (f)(1)(ii)(E) of this section.

(H) The amount of the aromatic compound is equal to the corrected amount ratio times the Amount of Internal Standard.

(I) The total aromatics in the sample is the sum of the amounts of the individual aromatic compounds in the sample.

(J) An internal standard solution can be made with the following compounds at the listed concentrations in volume percent. Also listed is the Chemical Abstracts Service Registry Number (CAS), atomic mass unit (amu) on which the detector must be set at the corresponding retention time if used in the selective ion mode, retention times in minutes, and boiling point in °C. (Other, similar, boiling point materials can be used which are not found in gasoline.) Retention times are approximate and apply only to a 60 meter capillary column used in the initial study. Other columns and retention times can be used.

(*1*) 4-methyl-2-pentanone, 50 vol% [108–10–1], 43.0 amu, 22.8 min., bp 118;

(*2*) benzyl alcohol, 25 vol%, [100–51–6], 108 amu, 61.7 min., bp 205;

(*3*) 1-octanol, [111–87–5], 25 vol%, 56.0 amu, 76.6 min., bp 196;

(K) At least two calibration mixtures which bracket the measured total aromatics concentration must be made with a representative mixture of aromatic compounds. The materials and concentrations used in the highest concentration calibration level in the initial study for this method are listed in this paragraph (f)(1)(ii)(K). Also listed is the Chemical Abstracts Service Registry Number (CAS), atomic mass unit (amu) on which the detector must be set for the corresponding retention time if used in the selective ion mode, retention times in minutes, and in some cases boiling point in °C. The standards are made in 2,2,4-trimethylpentane (iso-octane), [540–84–1]. Other aromatic compounds, and retention times may be acceptable as long as the aromatic values produced meet the criteria found in the quality assurance section for the aromatic methods.

Compound	Concentration (percent)	CAS No.	AMU	Retention time	Boiling point, °C
Benzene	2.25 vol	71–43–2	78	18.9 min	80.1
Methylbenzene	10.0 vol	108–88–3	91	25.5 min	111
Ethylbenzene	5.0 vol	100–41–4	91	34.1 min	136.2
1,3-Dimethylbenzene	5 vol	108–38–3	91	35.1 min	136–138
1,4-Dimethylbenzene		106–42–3			
1,2-dimethylbenzene	10 vol	95–47–6	91	38.1 min	144
(1-methylethyl)-benzene	2.25 vol	98–82–8	105	42.8 min	
Propylbenzene	2.25 vol	103–65–1	91	48.0 min	159.2
1-ethyl-2-methylbenzene	2.25 vol	611–14–3	105	49.3 min	165
1,2,4-trimethylbenzene	2.25 vol	95–63–6	105	50.9 min	169
1,2,3-trimethylbenzene	2.25 vol	526–73–8	105	53.3 min	
1,3-diethylbenzene	2.25 vol	141–93–5	119	56.6 min	181
Butylbenzene	2.25 vol	104–51–8	91	60.7 min	183
o-Cymene	2.25 vol	527–84–4	119	63.9 min	
1-ethyl-3-methylbenzene	2.25 vol	620–14–4	105	64.2 min	
m-Cymene	2.25 vol	535–77–3	119	69.0 min	
p-Cymene	2.25 vol	99–87–6	119	73.0 min	

Compound	Concentration (percent)	CAS No.	AMU	Retention time	Boiling point, °C
Isobutylbenzene	2.25 vol	538–93–2	91	75.0 min	
Indan	2.25 vol	496–11–7	117	50.0 min	
1-methyl-3-propylbenzene	2.25 vol	1074–43–7	105	78.9 min	
2-ethyl-1,4-dimethylbenzene	2.25 vol	1758–88–9	119	83.2 min	187
1,2,4,5-tetramethylbenzene	2.25 vol	95–93–2	119	83.4 min	
1-ethyl-2,4-dimethylbenzene	2.25 vol	874–41–9	119	85.7 min	
(1,1-dimethylethyl)-3-methylbenzene	2.25 vol	27138–21–2	133	87.3 min	
1-ethyl-2,3-dimethylbenzene	2.25 vol	933–98–2	119	88.7 min	
1-ethyl-1,4-dimethylbenzene	2.25 vol	874–41–9	119	94.9 min	
2-ethyl-1,3-dimethylbenzene	2.25 vol	2870–04–4	119	100.9 min	
1-ethyl-3,5-dimethylbenzene	2.25 vol	934–74–7	119	102.5 min	
1,2,3,5-tetramethylbenzene	2.25 vol	527–53–7	119	115.9 min	
Pentylbenzene	2.25 vol	538–68–1	91	116 min	
Naphthalene	2.25 vol	191–20–3	128	118.4 min	198
3,5-dimethyl-t-butylbenzene	2.25 vol	98–19–1	147	118.5 min	205.3
1-methylnaphthalene	2.25 vol	90–12–0	142	129.0 min	
2-methylnaphthalene	2.25 vol	91–57–6	142	131.0 min	

(iii) *Method B.* (A) Use a percent normalized format to determine the concentration of the individual compounds. No internal standard is used in this method.

(B) The calculation of the aromatic compounds is done by developing calibration curves for each compound using the type fit and origin handling specified in the instrument's calibration table.

(C) The amount of compound in a sample (the corrected amount) is calculated using the equation determined in paragraph (f)(1)(ii) of this section for that compound.

(D) The percent normalized amount of a compound is calculated using the following equation:

$$A_n = 100 \times \left(\frac{A_c}{A_s} \right)$$

where:

A_n = percent normalized amount of a compound

A_c = corrected amount of the compound

A_s = sum of all the corrected amounts for all identified compounds in the sample

(E) The total aromatics is the sum of all the percent normalized aromatic amounts in the sample.

(F) This method allows quantification of non-aromatic compounds in the sample. However, correct quantification can only be achieved if the instrument's calibration table can identify the compounds that are responsible for at least 95 volume percent of the sample and meets the following quality control criteria.

(2) Quality assurance. (i) The performance standards will be from repeated measurement of the calibration mixture, standard reference material, or process control gasoline. The uncertainty in the measured aromatics percentages in the standards must be less than 2.0 volume percent in the fuel at a 95% confidence level.

(ii) If the bias of the standard mean is greater than 2% of the theoretical value, then the standard measurement and measurements of all samples measured subsequent to the previous standard measurement that met the performance criteria must be repeated after re-calibrating the instrument.

(iii) Replicate samples must be within 3.0 volume percent of the previous sample or within 2.0 volume percent of the mean at the 95% confidence level.

(3) *Alternative test method.* (i) Prior to September 1, 2004, any refiner or importer may determine aromatics content using ASTM standard methods D 1319–99, entitled, ''Standard Test Method for Hydrocarbon Types in Liquid Petroleum Products by Flourescent Indicator Adsorption,'' for purposes of meeting any testing requirement involving aromatics content; provided that

(ii) The refiner or importer test result is correlated with the method specified in paragraph (f)(1) of this section.

(g) *Oxygen and oxygenate content analysis.* Oxygen and oxygenate content shall be determined by the gas

chromatographic procedure using an oxygenate flame ionization detector (GC-OFID) as set out in paragraphs (g)(1) through (8) of this section.

(1) *Introduction; scope of application.* (i) The following single-column, direct-injection gas chromatographic procedure is a technique for quantifying the oxygenate content of gasoline.

(ii) This method covers the quantitative determination of the oxygenate content of gasoline through the use of an oxygenate flame ionization detector (OFID). It is applicable to individual organic oxygenated compounds (up to 20 mass percent each) in gasoline having a final boiling point not greater than 220 °C. Samples above this level should be diluted to fall within the specified range.

(iii) The total concentration of oxygen in the gasoline, due to oxygenated components, may also be determined with this method by summation of all peak areas except for dissolved oxygen, water, and the internal standard. Sensitivities to each component oxygenate must be incorporated in the calculation.

(iv) All oxygenated gasoline components (alcohols, ethers, etc.) may be assessed by this method.

(v) The total mass percent of oxygen in the gasoline due to oxygenated components also may be determined with this method by summing all peak areas except for dissolved oxygen, water, and the internal standard.

(vi) Where trade names or specific products are noted in the method, equivalent apparatus and chemical reagents may be used. Mention of trade names or specific products is for the assistance of the user and does not constitute endorsement by the U.S. Environmental Protection Agency.

(2) *Summary of method.* A sample of gasoline is spiked to introduce an internal standard, mixed, and injected into a gas chromatograph (GC) equipped with an OFID. After chromatographic resolution the sample components enter a cracker reactor in which they are stoichiometrically converted to carbon monoxide (in the case of oxygenates), elemental carbon, and hydrogen. The carbon monoxide then enters a methanizer reactor for conversion to water and methane. Finally, the methane generated is determined by a flame ionization detector (FID).

(3) *Sample handling and preservation.* (i) Samples shall be collected and stored in containers which will protect them from changes in the oxygenated component contents of the gasoline, such as loss of volatile fractions of the gasoline by evaporation.

(ii) If samples have been refrigerated they shall be brought to room temperature prior to analysis.

(iii) Gasoline is extremely flammable and should be handled cautiously and with adequate ventilation. The vapors are harmful if inhaled and prolonged breathing of vapors should be avoided. Skin contact should be minimized.

(4) *Apparatus.* (i) A GC equipped with an oxygenate flame ionization detector.

(ii) An autosampler for the GC is highly recommended.

(iii) A 60-m length, 0.25-mm ID, 1.0-μm film thickness, nonpolar capillary GC column (J&W DB–1 or equivalent) is recommended.

(iv) An integrator or other acceptable system to collect and process the GC signal.

(v) A positive displacement pipet (200 μL) for adding the internal standard.

(5) *Reagents and materials.* Gasoline and many of the oxygenate additives are extremely flammable and may be toxic over prolonged exposure. Methanol is particularly hazardous. Persons performing this procedure must be familiar with the chemicals involved and all precautions applicable to each.

(i) Reagent grade oxygenates for internal standards and for preparation of standard solutions.

(ii) Supply of oxygenate-free gasoline for blank assessments and for preparation of standard solutions.

(iii) Calibration standard solutions containing known quantities of suspected oxygenates in gasoline.

(iv) Calibration check standard solutions prepared in the same manner as the calibration standards.

(v) Reference standard solutions containing known quantities of suspected oxygenates in gasoline.

(vi) Glass standard and test sample containers (between 5 and 100 Ml capacity) fitted with a self-sealing polytetrafluoroethlene (PTFE) faced

rubber septum crimp-on or screw-down sealing cap for preparation of standards and samples.

(6) *Calibration.*—(i)(A) Calibration standards of reagent-grade or better oxygenates (such as methanol, absolute ethanol, methyl t-butyl ether (MTBE), di-i-propyl ether (DIPE), ethyl t-butyl ether (ETBE), and t-amyl methyl ether (TAME)) are to be prepared gravimetrically by blending with gasoline that has been previously determined by GC/OFID to be free of oxygenates. Newly acquired stocks of reagent grade oxygenates shall be analyzed for contamination by GC/FID and GC/OFID before use.

(B) Required calibration standards (percent by volume in gasoline):

Oxygenate	Range (percent)	Number of standards (minimum)
Methanol	0.25–12.00	5
Ethanol	0.25–12.00	5
t-Butanol	0.25–12.00	5
MTBE	0.25–15.00	5

(ii) Take a glass sample container and its PTFE faced rubber septum sealing cap. Transfer a quantity of an oxygenate to the sample container and record the mass of the oxygenate to the nearest 0.1 mg. Repeat this process for any additional oxygenates of interest except the internal standard. Add oxygenate-free gasoline to dilute the oxygenates to the desired concentration. Record the mass of gasoline added to the nearest 0.1 mg, and determine and label the standard according to the mass percent quantities of each oxygenate added. These standards are not to exceed 20 mass percent for any individual pure component due to potential hydrocarbon breakthrough and/or loss of calibration linearity.

(iii) Inject a quantity of an internal standard (such as 2-butanol) and weigh the contents again. Record the difference in masses as the mass of internal standard to the nearest 0.1 mg. The mass of the internal standard shall amount to between 2 and 6 percent of the mass of the test sample (standard). The addition of an internal standard reduces errors caused by variations in injection volumes.

(iv) Ensure that the prepared standard is thoroughly mixed and transfer approximately 2 Ml of the solution to a vial compatible with the autosampler if such equipment is used.

(v) At least five concentrations of each of the expected oxygenates should be prepared. The standards should be as equally spaced as possible within the range and may contain more than one oxygenate. A blank for zero concentration assessments is also to be included. Additional standards should be prepared for other oxygenates of concern.

(vi) Based on the recommended chromatographic operating conditions specified in paragraph (g)(7)(i) of this section, determine the retention time of each oxygenate component by analyzing dilute aliquots either separately or in known mixtures. Reference should be made to the Chemical Abstracts Service (CAS) registry number of each of the analytes for proper identification. Approximate retention times for selected oxygenates under these conditions are as follows:

Oxygenate	CAS	Retention time (minutes)
Dissolved oxygen	7782–44–7	5.50
Water	7732–18–5	7.20
Methanol	67–56–1	9.10
Ethanol	64–17–5	12.60
Propanone	67–64–1	15.00
2–Propanol	67–63–0	15.70
t-Butanol	75–65–0	18.00
n-Propanol	71–23–8	21.10
MTBE	1634–04–4	23.80
2–Butanol	15892–23–6	26.30
i-Butanol	78–83–1	30.30
ETBE	637–92–3	31.10
n-Butanol	71–36–3	33.50
TAME	994–05–8	35.30
i-Pentanol	137–32–6	38.10

(vii) By GC/OFID analysis, determine the peak area of each oxygenate and of the internal standard.

(viii) Obtain a calibration curve by performing a least-squares fit of the relative area response factors of the oxygenate standards to their relative mass response factors as follows:

$$R_{ao} = b_o R_{mo} + b_1 (R_{mo})^2$$

where:

R_{ao} = relative area response factor of the oxygenate, A_o/A_i

R_{mo} = relative mass response factor of the oxygenate, Mo/M_i

A_o = area of the oxygenate peak
A_i = area of the internal standard peak
M_o = mass of the oxygenate added to the calibration standard
M_i = mass of internal standard added to the calibration standard
b_0 = linear regression coefficient
b_1 = quadratic regression coefficient

(7) *Procedure*. (i) GC operating conditions:

(A) Oxygenate-free helium carrier gas: 1.1 Ml/min (2 bar), 22.7 cm/sec at 115 °C;

(B) Carrier gas split ratio: 1:100;

(C) Zero air FID fuel: 370 Ml/min (2 bar);

(D) Oxygenate free hydrogen FID fuel: 15 Ml/min (2 bar);

(E) Injector temperature: 250 °C;

(F) Injection volume: 0.5 μL;

(G) Cracker reactor temperature: sufficiently high enough temperature to ensure reduction of all hydrocarbons to the elemental states (i.e., $C_x H_{2x} \rightarrow C + H_2$, etc.);

(H) FID temperature: 400 °C; and

(I) Oven temperature program: 40 °C for 6 min, followed by a temperature increase of 5 °C/min to 50 °C, hold at 50 °C for 5 min, followed by a temperature increase of 25 °C/min to 175 °C, and hold at 175 °C for 2 min.

(ii) Prior to analysis of any samples, inject a sample of oxygenate-free gasoline into the GC to test for hydrocarbon breakthrough overloading the cracker reactor. If breakthrough occurs, the OFID is not operating effectively and must be corrected before samples can be analyzed.

(iii) Prepare gasoline test samples for analysis as follows:

(A) Tare a glass sample container and its PTFE faced rubber septum sealing cap. Transfer a quantity of the gasoline sample to the sample container and record the mass of the transferred sample to the nearest 0.1 mg.

(B) Inject a quantity of the same internal standard (such as 2-butanol) used in generating the standards and weigh the contents again. Record the difference in masses as the mass of internal standard to the nearest 0.1 mg. The mass of the internal standard shall amount to between 2 and 6 percent of the mass of the test sample (standard). The addition of an internal standard reduces errors caused by variations in injection volumes.

(C) Ensure that this test sample (gasoline plus internal standard) is thoroughly mixed and transfer approximately 2 mL of the solution to a vial compatible with the autosampler if such equipment is used.

(iv) After GC/OFID analysis, identify the oxygenates in the sample based on retention times, determine the peak area of each oxygenate and of the internal standard, and calculate the relative area response factor for each oxygenate.

(v) Monitor the peak area of the internal standard. A larger than expected peak area for the internal standard when analyzing a test sample may indicate that this oxygenate is present in the original sample. Prepare a new aliquot of the sample without addition of the oxygenate internal standard. If the presence of the oxygenate previously used as the internal standard can be detected, then either:

(A) The concentration of this oxygenate must be assessed by the method of standard additions; or

(B) An alternative internal standard, based on an oxygenate that is not present in the original sample, must be utilized with new calibration curves.

(vi) Calculate the relative mass response factor (R_{mo}) for each oxygenate based on the relative area response factor (R_{ao}) and the calibration equation in paragraph (g)(6)(viii) of this section.

(vii) Calculate the mass percent of the oxygenate in the test sample according to the following equation:

$$M_o\% = \frac{R_{mo} M_i (100\%)}{M_s}$$

where:

M_o% = mass percent of the oxygenate in the test sample
M_s = mass of sample to which internal standard is added

(viii) If the mass percent exceeds the calibrated range, gravimetrically dilute a portion of the original sample to a concentration within the calibration range and analyze this sample starting with paragraph (g)(7)(iii) of this section.

(ix) Report the total weight percent oxygen as follows:

(A) Subtract the peak areas due to dissolved oxygen, water, and the internal standard from the total summed peak areas of the chromatogram.

(B) Assume the total summed peak area solely due to one of the oxygenates that the instrument is calibrated for and determine the total mass percent as that oxygenate based on paragraph (g)(7)(vii) of this section. For simplicity, chose an oxygenate having one oxygen atom per molecule.

(C) Multiply this concentration by the molar mass of oxygen and divide by the molar mass of the chosen oxygenate to determine the mass percent oxygen in the sample. For example, if the total peak area is based on MTBE, multiply by 16.00 (the molar mass of atomic oxygen) and divide by 88.15 (the molar mass of MTBE).

(x) Sufficient sample should be retained to permit reanalysis.

(8) *Quality control procedures and accuracy*. (i) The laboratory shall routinely monitor the repeatability (precision) of its analyses. The recommendations are:

(A) The preparation and analysis of laboratory duplicates at a rate of one per analysis batch or at least one per ten samples, whichever is more frequent.

(B) Laboratory duplicates shall be carried through all sample preparation steps independently.

(C) The range (R) for duplicate samples should be less than the following limits:

Oxygenate	Concentration mass percent	Upper limit for range mass percent
Methanol	0.27–1.07	0.010+0.043C
Methanol	1.07–12.73	0.053C
Ethanol	1.01–12.70	0.053C
MTBE	0.25–15.00	0.069+0.029C
DIPE	0.98–17.70	0.048C
ETBE	1.00–18.04	0.074C
TAME	1.04–18.59	0.060C

where:

$C = (C_o+C_d)/2$

C_o = concentration of the original sample

C_d = concentration of the duplicate sample

R = Range, $|C_o-C_d|$

(D) If the limits in paragraph (g)(8)(i)(C) of this section are exceeded, the sources of error in the analysis should be determined, corrected, and all analyses subsequent to and including the last duplicate analysis confirmed to be within the compliance specifications must be repeated. The specification limits for the range and relative range of duplicate analyses are minimum performance requirements. The performance of individual laboratories may indeed be better than these minimum requirements. For this reason it is recommended that control charts be utilized to monitor the variability of measurements in order to optimally detect abnormal situations and ensure a stable measurement process.

(E)(*1*) For reference purposes, a single laboratory study of repeatability was conducted on approximately 27 replicates at each of five concentrations for each oxygenate. The variation of MTBE analyses as measured by standard deviation was very linear with respect to concentration. Where concentration is expressed as mass percent, over the concentration range of 0.25 to 15.0 mass percent this relationship is described by the equation:

standard deviation = $0.00784 \times C+0.0187$

(*2*) The other oxygenates of interest, methanol, ethanol, DIPE, ETBE, and TAME, had consistent coefficients of variation at one mass percent and above:

Oxygenate	Concentration mass percent	Coefficient of variation percent of point
Methanol	1.07–12.73	1.43
Ethanol	1.01–12.70	1.43
DIPE	0.98–17.70	1.29
ETBE	1.00–18.04	2.00
TAME	1.04–18.59	1.62

(*3*) The relationship of standard deviation and concentration for methanol between 0.27 and 1.07 mass percent was very linear and is described by the equation:

standard deviation = $0.0118 \times C+0.0027$

(*4*) Based on these relationships, repeatability for the selected oxygenates at 2.0 and 2.7 mass percent oxygen were determined to be as follows, where repeatability is defined as the half width of the 95 percent confidence interval (i.e., 1.96 standard deviations) for a single analysis at the stated concentration:

Oxygenate	Concentration			Repeatability mass percent
	Mass percent oxygen	Mass percent oxygenate	Volume percent oxygenate	
Methanol	2.0	4.00	3.75	0.11
Ethanol	2.0	5.75	5.41	0.16
MTBE	2.00	11.00	11.00	0.21
DIPE	2.0	12.77	13.00	0.32
ETBE	2.0	12.77	12.74	0.50
TAME	2.0	12.77	12.33	0.41
Methanol	2.7	5.40	5.07	0.15
Ethanol	2.7	7.76	7.31	0.21
MTBE	2.7	14.88	14.88	0.26
DIPE	2.7	17.24	17.53	0.43
ETBE	2.7	17.24	17.20	0.67
TAME	2.7	17.24	16.68	0.55

(ii) The laboratory shall routinely monitor the accuracy of its analyses. The recommendations are:

(A) Calibration check standards and calibration standards may be prepared from the same oxygenate stocks and by the same analyst. However, calibration check standards and calibration standards must be prepared from separate batches of the final diluted standards. For the specification limits listed in paragraph (g)(8)(ii)(C) of this section, the concentration of the check standards should be in the range given in paragraph (g)(8)(i)(C) of this section.

(B) Calibration check standards shall be analyzed at a rate of at least one per analysis batch and at least one per 10 samples, whichever is more frequent.

(C) If the measured concentration of a calibration check standard is outside the range of 100.0% ±6.0% of the theoretical concentration for a selected oxygenate of 1.0 mass percent or above, the sources of error in the analysis should be determined, corrected, and all analyses subsequent to and including the last standard analysis confirmed to be within the compliance specifications must be repeated. The specification limits for the accuracy of calibration check standards analyses are minimum performance requirements. The performance of individual laboratories may indeed be better than these minimum requirements. For this reason it is recommended that control charts be utilized to monitor the variability of measurements in order to optimally detect abnormal situations and ensure a stable measurement process.

(D) Independent reference standards should be purchased or prepared from materials that are independent of the calibration standards and calibration check standards, and must not be prepared by the same analyst. For the specification limits listed in paragraph (g)(8)(ii)(F) of this section, the concentration of the reference standards should be in the range given in paragraph (g)(8)(i)(C) of this section.

(E) Independent reference standards shall be analyzed at a rate of at least one per analysis batch and at least one per 100 samples, whichever is more frequent.

(F) If the measured concentration of an independent reference standard is outside the range of 100.0% ±10.0% of the theoretical concentration for a selected oxygenate of 1.0 mass percent or above, the sources of error in the analysis should be determined, corrected, and all analyses subsequent to and including the last independent reference standard analysis confirmed to be within the compliance specifications in that batch must be repeated. The specification limits for the accuracy of independent reference standards analyses are minimum performance requirements. The performance of individual laboratories may be better than these minimum requirements. For this reason it is recommended that control charts be utilized to monitor the variability of measurements in order to optimally detect abnormal situations and ensure a stable measurement process.

(G) The preparation and analysis of spiked samples at a rate of one per analysis batch and at least one per ten samples.

(H) Spiked samples shall be prepared by adding a volume of a standard to a known volume of sample. To ensure adequate method detection limits, the volume of the standard added to the sample shall be limited to 5% or less than the volume of the sample. The spiked sample shall be carried through the same sample preparation steps as the background sample.

(I) The percent recovery of the spiked sample shall be calculated as follows:

$$\%\,\mathrm{Recovery} = \frac{100\%\ (C_m(V_o + V_1) - C_o V_o)}{C_s\ V_1}$$

where:

V_o = Volume of sample (Ml)
V_l = Volume of spiking standard added (Ml)
C_m = Measured concentration of spiked sample
C_o = Measured background concentration of sample
C_s = Known concentration of spiking standard

(J) If the percent recovery of any individual spiked sample is outside the range 100% ±10% from the theoretical concentration, then the sources of error in the analysis must be determined and corrected, and all analyses subsequent to and including the last analysis confirmed to be within the compliance specifications must be repeated. The maintenance of control charts is one acceptable method or ensuring compliance with this specification.

(K) (*1*) Either the range (absolute difference) or relative range (but not necessarily both) for duplicate samples shall be less than the following limits:

Oxygenate	Concentration (volume percent)	Range	Relative range (volume percent)
Methanol	1.0–12.0	.....	7.2
Ethanol	3.0–12.0	.....	7.1
t-Butanol	3.0–12.0	.....	9.4
MTBE	3.0–15.0	0.55	9.2

(*2*) Relative range is calculated as follows:

$$R_r = \frac{200(R)}{C_o + C_d}$$

where:

R_r = relative range
R = range
C_o = concentration of the original sample
C_d = concentration of the duplicate sample

(*3*) If the limits in paragraph (g)(8)(ii)(K)(*1*) of this section are exceeded, the sources of error in the analysis should be determined, corrected, and all analyses subsequent to and including the last duplicate analysis confirmed to be within the compliance specifications must be repeated. The specification limits for the range and relative range of duplicate analyses are minimum performance requirements. The performance of individual laboratories may indeed be better than these minimum requirements. For this reason it is recommended that control charts be utilized to monitor the variability of measurements in order to optimally detect abnormal situations and ensure a stable measurement process. For reference purposes, a single laboratory study of precision (approximately 35 replicates) yielded the following estimates of method precision:

Oxygenate	Concentration (weight percent)	Repeatability (volume percent)	(Percent)
Methanol	2.0	3.7	0.11
Ethanol	2.0	5.4	0.24
t-Butanol	2.0	8.8	0.39
MTBE	2.0	11.0	0.37

(*4*) Repeatability is defined as the half width of the 95 percent confidence interval for a single analysis at the stated concentration.

(iii) The laboratory shall routinely monitor the accuracy of its analyses. At a minimum this shall include:

(A) Calibration check standards and calibration standards may be prepared from the same oxygenate stocks and by the same analyst. However, calibration check standards and calibration standards must be prepared from separate batches of the final diluted standards. For the specification limits listed in paragraph (g)(8)(iii)(C) of this section, the concentration of the check standards should be in the range given in paragraph (g)(8)(iii)(C) of this section.

(B) Calibration check standards shall be analyzed at a rate of one per analysis batch or at least one per ten samples, whichever is more frequent.

(C) If the measured concentration of a calibration check standard is outside the range of 100%±10% percent of the theoretical concentration for methanol and ethanol, or 100%±13% for t-butanol

and MTBE, the sources of error in the analysis should be determined, corrected, and all analyses subsequent to and including the last standard analysis confirmed to be within the compliance specifications must be repeated. The specification limits for the accuracy of calibration check standards analyses are minimum performance requirements. The performance of individual laboratories may indeed be better than these minimum requirements. For this reason it is recommended that control charts be utilized to monitor the variability of measurements in order to optimally detect abnormal situations and ensure a stable measurement process.

(D) Independent reference standards shall be purchased or prepared from materials that are independent of the calibration standards and calibration check standards, and must not be prepared by the same analyst. For the specification limits listed in paragraph (g)(8)(iii)(F) of this section, the concentration of the reference standards should be in the range given in paragraph (g)(8)(iii)(C) of this section.

(E) Independent reference standards shall be analyzed at a rate of one per analysis batch or at least one per 100 samples, whichever is more frequent.

(F) If the measured concentration of an independent reference standard is outside the range of 100%±10% of the theoretical concentration for methanol and ethanol, or 100%±13% for t-butanol and MTBE, the sources of error in the analysis should be determined, corrected, and all analyses subsequent to and including the last independent reference standard analysis confirmed to be within the compliance specifications in that batch must be repeated. The specification limits for the accuracy of independent reference standards analyses are minimum performance requirements. The performance of individual laboratories may indeed be better than these minimum requirements. For this reason it is recommended that control charts be utilized to monitor the variability of measurements in order to optimally detect abnormal situations and ensure a stable measurement process.

(G) If matrix effects are suspected, then spiked samples shall be prepared and analyzed as follows:

(*1*) Spiked samples shall be prepared by adding a volume of a standard to a known volume of sample. To ensure adequate method detection limits, the volume of the standard added to the sample should be minimized to 5% or less of the volume of the sample. The spiked sample should be carried through the same sample preparation steps as the background sample.

(*2*) The percent recovery of spiked samples should be calculated as follows:

$$\%\text{Recovery} = \frac{100\ (C_c(V_o + V_s) - C_o V_o)}{C_s\ V_s}$$

where:

C_c = concentration of spiked sample
C_o = concentration of sample without spiking
C_s = known concentration of spiking standard
V_o = volume of sample
V_s = volume of spiking standard added to the sample

(*3*) If the percent recovery of a spiked sample is outside the range of 100% ±13% of the theoretical concentration for methanol and ethanol, or 100% ±16% for t-butanol and MTBE, the sources of error in the analysis should be determined, corrected, and all analyses subsequent to and including the last analysis confirmed to be within the compliance specifications must be repeated. The specification limits for the accuracy of the percent recovery of spiked sample analyses are minimum performance requirements. The performance of individual laboratories may indeed be better than these minimum requirements. For this reason it is recommended that control charts be utilized to monitor the variability of measurements in order to optimally

detect abnormal situations and ensure a stable measurement process.

(9)(i) Prior to September 1, 2004, and when the oxygenates present are limited to MTBE, ETBE, TAME, DIPE, tertiary-amyl alcohol, and C1 to C4 alcohols, any refiner, importer, or oxygenate blender may determine oxygen and oxygenate content using ASTM standard method D 4815–99, entitled ''Standard Test Method for Determination of MTBE, ETBE, TAME, DIPE, tertiary-Amyl Alcohol and C1 to C4 Alcohol in Gasoline by Gas Chromatography,'' for purposes of meeting any testing requirement; provided that

(ii) The refiner or importer test result is correlated with the method set forth in paragraphs (g)(1) through (g)(8) of this section.

(h) *Incorporations by reference.* ASTM standard methods D 2622–98 ''Standard Test Method for Sulfur in Petroleum Products by Wavelength Dispersive X-ray Fluorescence Spectrometry,'' D 3246–96 ''Standard Test Method for Sulfur in Petroleum Gas by Oxidative Microcoulometry,'' D 3606–99 ''Standard Test Method for Determination of Benzene and Toluene in Finished Motor and Aviation Gasoline by Gas Chromatography,'' D 1319–99 ''Standard Test Method for Hydrocarbon Types in Liquid Petroleum Products by Fluorescent Indicator Adsorption,'' D 4815–99 ''Standard Test Method for Determination of MTBE, ETBE, TAME, DIPE, tertiary-Amyl Alcohol and C_1 to C_4 Alcohols in Gasoline by Gas Chromatography,'' and D 86–90 ''Standard Test Method for Distillation of Petroleum Products,'' with the exception of the degrees Fahrenheit figures in Table 9 of D 86–90, are incorporated by reference. These incorporations by reference were approved by the Director of the Federal Register in accordance with 5 U.S.C. 552(a) and 1 CFR part 51. Copies may be obtained from the American Society for Testing and Materials, 100 Barr Harbor Dr., West Conshohocken, PA 19428. Copies may be inspected at the Air Docket Section (LE–131), room M–1500, U.S. Environmental Protection Agency, Docket No. A–97–03, 401 M Street, SW, Washington, DC 20460, or at the Office of the Federal Register, 800 North Capitol Street, NW, Suite 700, Washington, DC.

[59 FR 7813, Feb. 16, 1994, as amended at 59 FR 36961, July 20, 1994; 61 FR 58306, Nov. 13, 1996; 63 FR 63793, Nov. 17, 1998; 65 FR 6822, Feb. 10, 2000; 65 FR 53189, Sept. 1, 2000; 66 FR 17263, Mar. 29, 2001]

§ 80.47 [Reserved]

§ 80.48 Augmentation of the complex emission model by vehicle testing.

(a) The provisions of this section apply only if a fuel claims emission reduction benefits from fuel parameters that are not included in the complex emission model or complex emission model database, or if the values of fuel parameters included in the complex emission model set forth in § 80.45 fall outside the range of values for which the complex emission model is deemed valid.

(b) To augment the complex emission model described at § 80.45, the following requirements apply:

(1) The petitioner must obtain prior approval from the Administrator for the design of the test program before beginning the vehicle testing process. To obtain approval, the petitioner must at minimum provide the following information: the fuel parameter to be evaluated for emission effects; the number and description of vehicles to be used in the test fleet, including model year, model name, vehicle identification number (VIN), mileage, emission performance (exhaust THC emission level), technology type, and manufacturer; a description of the methods used to procure and prepare the vehicles; the properties of the fuels to be used in the testing program (as specified at § 80.49); the pollutants and emission categories intended to be evaluated; the precautions used to ensure that the effects of the parameter in question are independent of the effects of other parameters already included in the model; a description of the quality assurance procedures to be used during the test program; the statistical analysis techniques to be used in analyzing the test data, and the identity and location of the organization performing the testing.

(2) Exhaust emissions shall be measured per the requirements of this section and § 80.49 through § 80.62.

(3) The nonexhaust emission model (including evaporative, running loss, and refueling VOC and toxics emissions) shall not be augmented by vehicle testing.

(4) The Agency reserves the right to observe and monitor any testing that is performed pursuant to the requirements of this section.

(5) The Agency reserves the right to evaluate the quality and suitability of data submitted pursuant to the requirements of this section and to reject, re-analyze, or otherwise evaluate such data as is technically warranted.

(6) Upon a showing satisfactory to the Administrator, the Administrator may approve a petition to waive the requirements of this section and § 80.49, § 80.50(a), § 80.60(d)(3), and § 80.60(d)(4) in order to better optimize the test program to the needs of the particular fuel parameter. Any such waiver petition should provide information justifying the requested waiver, including an acceptable rationale and supporting data. Petitioners must obtain approval from the Administrator prior to conducting testing for which the requirements in question are waived. The Administrator may waive the noted requirements in whole or in part, and may impose appropriate conditions on any such waiver.

(c) In the case of petitions to augment the complex model defined at § 80.45 with a new parameter, the effect of the parameter being tested shall be determined separately, for each pollutant and for each emitter class category. If the parameter is not included in the complex model but is represented in whole or in part by one or more parameters included in the model, the petitioner shall be required to demonstrate the emission effects of the parameter in question independent of the effects of the already-included parameters. The petitioner shall also have to demonstrate the effects of the already-included parameters independent of the effects of the parameter in question. The emission performance of each vehicle on the fuels specified at § 80.49, as measured through vehicle testing in accordance with § 80.50 through § 80.62, shall be analyzed to determine the effects of the fuel parameter being tested on emissions according to the following procedure:

(1) The analysis shall fit a regression model to the natural logarithm of emissions measured from addition fuels 1, 2, and 3 only (as specified at § 80.49(a) and adjusted as per paragraph (c)(1)(iv) of this section and § 80.49(d)) that includes the following terms:

(i) A term for each vehicle that shall reflect the effect of the vehicle on emissions independent of fuel compositions. These terms shall be of the form $D_i \times V_i$, where D_i is the coefficient for the term and V_i is a dummy variable which shall have the value 1.0 for the ith vehicle and the value 0 for all other vehicles.

(ii) A linear term in the parameter being tested for each emitter class, of the form $A_i \times (P_1 - P_1\ (avg)) \times E_i$, where A_i is the coefficient for the term, P_1 is the level of the parameter in question, P_1 (avg) is the average level of the parameter in question for all seven test fuels specified at § 80.49(a)(1), and E_i is a dummy variable representing emitter class, as defined at § 80.62. For normal emitters, $E_1 = 1$ and $E_2 = 0$. For higher emitters, $E_1 = 0$ and $E_2 = 1$.

(iii) For the VOC and NO_x models, a squared term in the parameter being tested for each emitter class, of the form $B_i \times (P_1 - P_1\ (avg))^2 \times E_i$, where B_i is the coefficient for the term and where P_1 , P_1 (avg), and E_i are as defined in paragraph (c)(1)(ii) of this section.

(iv) To the extent that the properties of fuels 1, 2, and 3 which are incorporated in the complex model differ in value among the three fuels, the complex model shall be used to adjust the observed emissions from test vehicles on those fuels to compensate for those differences prior to fitting the regression model.

(v) The A_i and B_i terms and coefficients developed by the regression described in this paragraph (c) shall be evaluated against the statistical criteria defined in paragraph (e) of this section. If both terms satisfy these criteria, then both terms shall be retained. If the B_i term satisfies these criteria and the A_i term does not, then both terms shall be retained. If the B_i term does not satisfy these criteria,

then the B_i term shall be dropped from the regression model and the model shall be re-estimated. If, after dropping the B_i term and re-estimating the model, the A_i term does not satisfy these criteria, then both terms shall be dropped, all test data shall be reported to EPA, and the augmentation request shall be denied.

(2) After completing the steps outlined in paragraph (c)(1) of this section, the analysis shall fit a regression model to a combined data set that includes vehicle testing results from all seven addition fuels specified at § 80.49(a), the vehicle testing results used to develop the model specified at § 80.45, and vehicle testing results used to support any prior augmentation requests which the Administrator deems necessary.

(i) The analysis shall fit the regression models described in paragraphs (c)(2) (ii) through (v) of this section to the natural logarithm of measured emissions.

(ii) All regressions shall include a term for each vehicle that shall reflect the effect of the vehicle on emissions independent of fuel compositions. These terms shall be of the form $D_i \times V_i$, where D_i is the coefficient for the term and V_i is a dummy variable which shall have the value 1.0 for the ith vehicle and the value 0 for all other vehicles. Vehicles shall be represented by separate terms for each test program in which they were tested. The vehicle terms for the vehicles included in the test program undertaken by the petitioner shall be calculated based on the results from all seven fuels specified at § 80.49(a). Note that the D_i estimates for the petitioner's test vehicles in this regression are likely to differ from the D_i estimates discussed in paragraph (c)(1)(i) of this section since they will be based on a different set of fuels.

(iii) All regressions shall include existing complex model terms and their coefficients, including those augmentations that the Administrator deems necessary. All terms and coefficients shall be expressed in centered form. The Administrator shall make available upon request existing complex model terms and coefficients in centered form.

(iv) All regressions shall include the linear and squared terms, and their coefficients, estimated in the final regression model described in paragraph (c)(1) of this section.

(v) The VOC and NO_x regressions shall include those interactive terms with other fuel parameters, of the form $C_{i(1,j)} \times (P_1 - P_1 \text{ (avg)}) \times (P_j - P_j \text{ (avg)}) \times E_i$, where $C_{i(1,j)}$ is the coefficient for the term, P_1 is the level of the parameter being added to the model, P_1 (avg) is the average level of the parameter being added for all seven addition fuels specified at § 80.49(a), P_j is the level of the other fuel parameter, P_j (avg) is the centering value for the other fuel parameter used to develop the complex model or used in the other parameter's augmentation study, and E_i is as defined in paragraph (c)(1) of this section, which are found to satisfy the statistical criteria defined in paragraph (e) of this section. Such terms shall be added to the regression model in a stepwise manner.

(3) The model described in paragraphs (c) (1) and (2) of this section shall be developed separately for normal-emitting and higher-emitting vehicles. Each emitter class shall be treated as a distinct population for the purposes of determining regression coefficients.

(4) Once the augmented models described in paragraphs (c) (1) through (3) of this section have been developed, they shall be converted to an uncentered form through appropriate algebraic manipulation.

(5) The augmented model described in paragraph (c)(4) of this section shall be used to determine the effects of the parameter in question at levels between the levels in Fuels 1 and 3, as defined at § 80.49(a)(1), for all fuels which claim emission benefits from the parameter in question.

(d)(1) In the case of petitions to augment the complex model defined at § 80.45 by extending the range of an existing complex model parameter, the effect of the parameter being tested shall be determined separately, for each pollutant and for each technology group and emitter class category, at levels between the extension level and the nearest limit of the core of the data used to develop the unaugmented complex model as follows:

Fuel parameter	Data core limits	
	Lower	Upper
Sulfur, ppm	10	450
RVP, psi	7	10
E200, vol %	33	66
E300, vol %	72	94
Aromatics, vol %	18	46
Benzene, vol %	0.4	1.8
Olefins, vol %	1	19
Oxygen, wt %.		
As ethanol	0	3.4
All others:	0	2.7

(2) The emission performance of each vehicle on the fuels specified at § 80.49(b)(2), as measured through vehicle testing in accordance with §§ 80.50 through 80.62, shall be analyzed to determine the effects of the fuel parameter being tested on emissions according to the following procedure:

(i) The analysis shall incorporate the vehicle testing data from the extension fuels specified at § 80.49(b), the vehicle testing results used to develop the model specified at § 80.45, and vehicle testing results used to support any prior augmentation requests which the Administrator deems necessary. A regression incorporating the following terms shall be fitted to the natural logarithm of emissions contained in this combined data set:

(A) A term for each vehicle that shall reflect the effect of the vehicle on emissions independent of fuel compositions. These terms shall be of the form $D_i \times V_i$, where D_i is the coefficient for the term and V_i is a dummy variable which shall have the value 1.0 for the ith vehicle and the value 0 for all other vehicles. Vehicles shall be represented by separate terms for each test program in which they were tested. The vehicle terms for the vehicles included in the test program undertaken by the petitioner shall be calculated based on the results from all three fuels specified at § 80.49(b)(2).

(B) Existing complex model terms that do not include the parameter being extended and their coefficients, including those augmentations that the Administrator deems necessary. The centering values for these terms shall be identical to the centering values used to develop the complex model described at § 80.45.

(C) Existing complex model terms that include the parameter being extended. The coefficients for these terms shall be estimated by the regression. The centering values for these terms shall be identical to the centering values used to develop the complex model described at § 80.45.

(D) If the unaugmented VOC or NO_x complex models do not contain a squared term for the parameter being extended, such a term should be added in a stepwise fashion after completing the model described in paragraphs (d)(2)(i)(A) through (C) of this section. The coefficient for this term shall be estimated by the regression. The centering value for this term shall be identical to the centering value used to develop the complex model described at § 80.45.

(E) The terms defined in paragraphs (d)(2)(i)(C) and (D) of this section shall be evaluated against the statistical criteria defined in paragraph (e) of this section.

(ii) The model described in paragraph (d)(2)(i) of this section shall be developed separately for normal-emitting and higher-emitting vehicles, as defined at § 80.62. Each emitter class shall be treated as a distinct population for the purposes of determining regression coefficients.

(e) *Statistical criteria.* (1) The petitioner shall be required to submit evidence with the petition which demonstrates the statistical validity of the regression described in paragraph (c) or (d) of this section, including at minimum:

(i) Evidence demonstrating that colinearity problems are not severe, including but not limited to variance inflation statistics of less than 10 for the second-order and interactive terms included in the regression model.

(ii) Evidence demonstrating that the regression residuals are normally distributed, including but not limited to the skewness and Kurtosis statistics for the residuals.

(iii) Evidence demonstrating that overfitting and underfitting risks have been balanced, including but not limited to the use of Mallow's C_p criterion.

(2) The petitioner shall be required to submit evidence with the petition which demonstrates that the appropriate terms have been included in the regression, including at minimum:

(i) Descriptions of the analysis methods used to develop the regressions, including any computer code used to analyze emissions data and the results of regression runs used to develop the proposed augmentation, including intermediate regressions produced during the stepwise regression process.

(ii) Evidence demonstrating that the significance level used to include terms in the model was equal to 0.90.

(f) The complex emission model shall be augmented with the results of vehicle testing as follows:

(1) The terms and coefficients determined in paragraph (c) or (d) of this section shall be used to supplement the complex emission model equation for the corresponding pollutant and emitter category. These terms and coefficients shall be weighted to reflect the contribution of the emitter category to in-use emissions as shown at § 80.45.

(2) If the candidate parameter is not included in the unaugmented complex model and is not represented in whole or in part by one or more parameters included in the model, the modification shall be accomplished by adding the terms and coefficients to the complex model equation for that pollutant, technology group, and emitter category.

(3) If the parameter is included in the complex model but is being tested at levels beyond the current range of the model, the terms and coefficients determined in paragraph (d) of this section shall be used to supplement the complex emission model equation for the corresponding pollutant.

(i) The terms and coefficients of the complex model described at § 80.45 shall be used to evaluate the emissions performance of fuels with levels of the parameter being tested that are within the valid range of the model, as defined at § 80.45.

(ii) The emissions performance of fuels with levels of the parameter that are beyond the valid range of the unaugmented model shall be given in percentage change terms by $100 - [(100 + A) \times (100 + C) / (100 + B)]$, where:

(A) ''A'' shall be set equal to the percentage change in emissions for a fuel with identical fuel property values to the fuel being evaluated except for the parameter being extended, which shall be set equal to the nearest limit of the data core, using the unaugmented complex model.

(B) ''B'' shall be set equal to the percentage change in emissions for the fuel described in paragraph (f)(3)(i) of this section according to the augmented complex model.

(C) ''C'' shall be set equal to the percentage change in emissions of the actual fuel being evaluated using the augmented complex model.

(g) EPA reserves the right to analyze the data generated during vehicle testing, to use such analyses to determine the validity of other augmentation petitions, and to use such data to update the complex model for use in certifying all reformulated gasolines.

(h) Duration of acceptance of emission effects determined through vehicle testing:

(1) If the Agency does not accept, modify, or reject a particular augmentation for inclusion in an updated complex model (performed through rulemaking), then the augmentation shall remain in effect until the next update to the complex model takes effect.

(2) If the Agency does reject or modify a particular augmentation for inclusion in an updated complex model, then the augmentation shall no longer be able to be used as of the date the updated complex model is deemed to take effect, unless the following conditions and limitations apply:

(i) The augmentation in question may continue to be used by those fuel suppliers which can prove, to the Administrator's satisfaction, that the fuel supplier had already begun producing a fuel utilizing the augmentation at the time the revised model is promulgated.

(ii) The augmentation in question may only be used to evaluate the emissions performance of fuels in conjunction with the complex emission model in effect as of the date of production of the fuels.

(iii) The augmentation may only be used for three years of fuel production, or a total of five years from the date the augmentation first took effect, whichever is shorter.

(3) The Administrator shall determine when sufficient new information

on the effects of fuel properties on vehicle emissions has been obtained to warrant development of an updated complex model.

[59 FR 7813, Feb. 16, 1994, as amended at 59 FR 36962, July 20, 1994]

§ 80.49 Fuels to be used in augmenting the complex emission model through vehicle testing.

(a) Seven fuels (hereinafter called the ''addition fuels'') shall be tested for the purpose of augmenting the complex emission model with a parameter not currently included in the complex emission model. The properties of the addition fuels are specified in paragraphs (a) (1) and (2) of this section. The addition fuels shall be specified with at least the same level of detail and precision as in § 80.43(c), and this information must be included in the petition submitted to the Administrator requesting augmentation of the complex emission model.

(1) The seven addition fuels to be tested when augmenting the complex model specified at § 80.45 with a new fuel parameter shall have the properties specified as follows:

PROPERTIES OF FUELS TO BE TESTED WHEN AUGMENTING THE MODEL WITH A NEW FUEL PARAMETER

Fuel property	Fuels						
	1	2	3	4	5	6	7
Sulfur, ppm	150	150	150	35	35	500	500
Benzene, vol %	1.0	1.0	1.0	0.5	0.5	1.3	1.3
RVP, psi	7.5	7.5	7.5	6.5	6.5	8.1	8.1
E200, %	50	50	50	62	62	37	37
E300, %	85	85	85	92	92	79	79
Aromatics, vol %	27	27	27	20	20	45	45
Olefins, vol %	9.0	9.0	9.0	2.0	2.0	18	18
Oxygen, wt %	2.1	2.1	2.1	2.7	2.7	1.5	1.5
Octane, (R+M)/2	87	87	87	87	87	87	87
New Parameter [1]	C	C+B/2	B	C	B	C	B

[1] C = Candidate level, B = Baseline level.

(i) For the purposes of vehicle testing, the ''baseline'' level of the parameter shall refer to the level of the parameter in Clean Air Act baseline gasoline. The ''candidate'' level of the parameter shall refer to the most extreme value of the parameter, relative to baseline levels, for which the augmentation shall be valid.

(ii) If the fuel parameter for which the fuel supplier is petitioning EPA to augment the complex emission model (hereinafter defined as the ''candidate parameter'') is not specified for Clean Air Act summer baseline fuel, then the baseline level for the candidate parameter shall be set at the levels found in typical gasoline. This level and the justification for this level shall be included in the petitioner's submittal to EPA prior to initiating the test program, and EPA must approve this level prior to the start of the program.

(iii) If the candidate parameter is not specified for Clean Air Act summer baseline fuel, and is not present in typical gasoline, its baseline level shall be zero.

(2) The addition fuels shall contain detergent control additives in accordance with section 211(l) of the Clean Air Act Amendments of 1990 and the associated EPA requirements for such additives.

(3) The addition fuels shall be specified with at least the same level of detail and precision as in § 80.43(c), and this information shall be included in the petition submitted to the Administrator requesting augmentation of the complex emission model.

(i) Paraffin levels in Fuels 1 and 2 shall be altered from the paraffin level in Fuel 3 to compensate for the addition or removal of the candidate parameter, if necessary. Paraffin levels in Fuel 4 shall be altered from the paraffin level in Fuel 5 to compensate for the addition or removal of the candidate parameter, if necessary. Paraffin levels in Fuel 6 shall be altered from the paraffin level in Fuel 7 to compensate for the addition or removal

of the candidate parameter, if necessary.

(ii) Other properties of Fuels 4 and 6 shall not vary from the levels for Fuels 5 and 7, respectively, unless such variations are the naturally-occurring result of the changes described in paragraphs (a)(1) and (2) of this section. Other properties of Fuels 1 and 2 shall not vary from the levels for Fuel 3, unless such variations are the naturally-occurring result of the changes described in paragraphs (a)(1) and (2) of this section.

(iii) The addition fuels shall be specified with at least the same level of detail and precision as defined in paragraph (a)(5)(i) of this section, and this information must be included in the petition submitted to the Administrator requesting augmentation of the complex emission model.

(4) The properties of the addition fuels shall be within the blending tolerances defined in this paragraph (a)(4) relative to the values specified in paragraphs (a)(1) and (2) of this section. Fuels that do not meet these tolerances shall require the approval of the Administrator to be used in vehicle testing to augment the complex emission model:

Fuel parameter	Blending tolerance
Sulfur content	±25 ppm.
Benzene content	±0.2 vol %.
RVP	±0.2 psi.
E200 level	±2 %.
E300 level	±4 %.
Oxygenate content	±1.0 vol %.
Aromatics content	±2.7 vol %.
Olefins content	±2.5 vol %.
Saturates content	±2.0 vol %.
Octane	±0.5.
Detergent control additives	±10% of the level required by EPA's detergents rule.
Candidate parameter	To be determined as part of the augmentation process.

(5) The composition and properties of the addition fuels shall be determined by averaging a series of independent tests of the properties and compositional factors defined in paragraph (a)(5)(i) of this section as well as any additional properties or compositional factors for which emission benefits are claimed.

(i) The number of independent tests to be conducted shall be sufficiently large to reduce the measurement uncertainty for each parameter to a sufficiently small value. At a minimum the 95% confidence limits (as calculated using a standard t-test) for each parameter must be within the following range of the mean measured value of each parameter:

Fuel parameter	Measurement uncertainty
API gravity	±0.2°API
Sulfur content	±10 ppm
Benzene content	±0.02 vol %
RVP	±0.05 psi
Octane	±0.2 (R+M/2)
E200 level	±2%
E300 level	±2%
Oxygenate content	±0.2 vol %
Aromatics content	±0.5 vol %
Olefins content	±0.3 vol %
Saturates content	±1.0 vol %
Detergent control Additives.	±2% of the level required by EPA's detergents rule.

(ii) The 95% confidence limits for measurements of fuel parameters for which emission reduction benefits are claimed and for which tolerances are not defined in paragraph (a)(5)(i) of this section must be within ±5% of the mean measured value.

(iii) Each test must be conducted in the same laboratory in accordance with the procedures outlined at § 80.46.

(b) Three fuels (hereinafter called the ''extension fuels'') shall be tested for the purpose of extending the valid range of the complex emission model for a parameter currently included in the complex emission model. The properties of the extension fuels are specified in paragraphs (b)(2) through (4) of this section. The extension fuels shall be specified with at least the same level of detail and precision as in § 80.43(c), and this information must be included in the petition submitted to the Administrator requesting augmentation of the complex emission model. Each set of three extension fuels shall be used only to extend the range of a single complex model parameter.

(1) The ''extension level'' shall refer to the level to which the parameter being tested is to be extended. The three fuels to be tested when extending the range of fuel parameters already included in the complex model or a prior augmentation to the complex model shall be referred to as ''extension fuels.''

(2) The composition and properties of the extension fuels shall be as described in paragraphs (b)(2) (i) and (ii) of this section.

(i) The extension fuels shall have the following levels of the parameter being extended:

LEVEL OF EXISTING COMPLEX MODEL PARAMETERS BEING EXTENDED

Fuel property being extended	Extension fuel No. 1	Extension fuel No. 2	Extension fuel No. 3
Sulfur, ppm	Extension level	80	450
Benzene, vol %	Extension level	0.5	1.5
RVP, psi	Extension level	6.7	8.0
E200, %	Extension level	38	61
E300, %	Extension level	78	92
Aromatics, vol %	Extension level	20	45
Olefins, vol %	Extension level	3.0	18
Oxygen, wt %	Extension level	1.7	2.7
Octane, R+M/2	87	87	87

(ii) The levels of parameters other than the one being extended shall be given by the following table for all three extension fuels:

LEVELS FOR FUEL PARAMETERS OTHER THAN THOSE BEING EXTENDED

Fuel property	Extension fuel No. 1	Extension fuel No. 2	Extension fuel No. 3
Sulfur, ppm	150	150	150
Benzene, vol %	1.0	1.0	1.0
RVP, psi	7.5	7.5	7.5
E200, %	50	50	50
E300, %	85	85	85
Aromatics, vol %	25	25	25
Olefins, vol %	9.0	9.0	9.0
Oxygen, wt %	2.0	2.0	2.0
Octane, R+M/2	87	87	87

(3) If the Complex Model for any pollutant includes one or more interactive terms involving the parameter being extended, then two additional extension fuels shall be required to be tested for each such interactive term. These additional extension fuels shall have the following properties:

(i) The parameter being tested shall be present at its extension level.

(ii) The interacting parameter shall be present at the levels specified in paragraph (b)(2)(i) of this section for extension Fuels 2 and 3.

(iii) All other parameters shall be present at the levels specified in paragraph (b)(2)(ii) of this section.

(4) All extension fuels shall contain detergent control additives in accordance with Section 211(l) of the Clean Air Act Amendments of 1990 and the associated EPA requirements for such additives.

(c) The addition fuels defined in paragraph (a) of this section and the extension fuels defined in paragraph (b) of this section shall meet the following requirements for blending and measurement precision:

(1) The properties of the test and extension fuels shall be within the blending tolerances defined in this paragraph (c) relative to the values specified in paragraphs (a) and (b) of this section. Fuels that do not meet the following tolerances shall require the approval of the Administrator to be used in vehicle testing to augment the complex emission model:

Fuel parameter	Blending tolerance
Sulfur content	±25 ppm.
Benzene content	±0.2 vol %.
RVP	±0.2 psi.
E200 level	±2 %.
E300 level	±4 %.
Oxygenate content	±1.5 vol %.
Aromatics content	±2.7 vol %.
Olefins content	±2.5 vol %.
Saturates content	±2.0 vol %.
Octane	±0.5.
Candidate parameter	To be determined as part of the augmentation process.

(2) The extension and addition fuels shall be specified with at least the same level of detail and precision as defined in paragraph (c)(2)(ii) of this section, and this information must be included in the petition submitted to the Administrator requesting augmentation of the complex emission model.

(i) The composition and properties of the addition and extension fuels shall be determined by averaging a series of independent tests of the properties and

compositional factors defined in paragraph (c)(2)(ii) of this section as well as any additional properties or compositional factors for which emission benefits are claimed.

(ii) The number of independent tests to be conducted shall be sufficiently large to reduce the measurement uncertainty for each parameter to a sufficiently small value. At a minimum the 95% confidence limits (as calculated using a standard t-test) for each parameter must be within the following range of the mean measured value of each parameter:

Fuel parameter	Measurement uncertainty
API gravity	±0.2 °API.
Sulfur content	±5 ppm.
Benzene content	±0.05 vol %.
RVP	±0.08 psi.
Octane	±0.1 (R+M/2).
E200 level	±2 %.
E300 level	±2 %.
Oxygenate content	±0.2 vol %.
Aromatics content	±0.5 vol %.
Olefins content	±0.3 vol %.
Saturates content	±1.0 vol.%
Octane	±0.2.
Candidate parameter	To be determined as part of the augmentation process.

(iii) Petitioners shall obtain approval from EPA for the 95% confidence limits for measurements of fuel parameters for which emission reduction benefits are claimed and for which tolerances are not defined in paragraph (c)(2)(i) of this section.

(iv) Each test must be conducted in the same laboratory in accordance with the procedures outlined at § 80.46.

(v) The complex emission model described at § 80.45 shall be used to adjust the emission performance of the addition and extension fuels to compensate for differences in fuel compositions that are incorporated in the complex model, as described at § 80.48. Compensating adjustments for naturally-resulting variations in fuel parameters shall also be made using the complex model. The adjustment process is described in paragraph (d) of this section.

(d) The complex emission model described at § 80.45 shall be used to adjust the emission performance of addition and extension fuels to compensate for differences in fuel parameters other than the parameter being tested. Compensating adjustments for naturally-resulting variations in fuel parameters shall also be made using the complex model. These adjustments shall be calculated as follows:

(1) Determine the exhaust emissions performance of the actual addition or extension fuels relative to the exhaust emissions performance of Clean Air Act baseline fuel using the complex model. For addition fuels, set the level of the parameter being tested at baseline levels for purposes of emissions performance evaluation using the complex model. For extension fuel #1, set the level of the parameter being extended at the level specified in extension fuel #2. Also determine the exhaust emissions performance of the addition fuels specified in paragraph (a)(1) of this section with the level of the parameter being tested set at baseline levels.

(2) Calculate adjustment factors for each addition fuel as follows:

(i) Adjustment factors shall be calculated using the formula:

$$A = \frac{[1+(P(\text{actual})/100)]}{[1+(P(\textit{nominal})/100)]}$$

where

A = the adjustment factor

P(actual) = the performance of the actual fuel used in testing according to the complex model

P(nominal) = the performance that would have been achieved by the test fuel defined in paragraph (a)(1) of this section according to the complex model (as described in paragraph (d)(1) of this section).

(ii) Adjustment factors shall be calculated for each pollutant and for each emitter class.

(3) Multiply the measured emissions from each vehicle by the corresponding adjustment factor for the appropriate addition or extension fuel, pollutant, and emitter class. Use the resulting adjusted emissions to conduct all modeling and emission effect estimation activities described in § 80.48.

(e) All fuels included in vehicle testing programs shall have an octane number of 87.5, as measured by the (R+M)/2 method following the ASTM D4814 procedures, to within the measurement and blending tolerances specified in paragraph (c) of this section.

(f) A single batch of each addition or extension fuel shall be used throughout the duration of the testing program.

[59 FR 7813, Feb. 16, 1994, as amended at 59 FR 36962, July 20, 1994]

§ 80.50 General test procedure requirements for augmentation of the emission models.

(a) The following test procedure must be followed when testing to augment the complex emission model described at § 80.45.

(1) VOC, NO_X, CO, and CO_2 emissions must be measured for all fuel-vehicle combinations tested.

(2) Toxics emissions must be measured when testing the extension fuels per the requirements of § 80.49(a) or when testing addition fuels 1, 2, and 3 per the requirements of § 80.49(a).

(3) When testing addition fuels 4, 5, 6, and 7 per the requirements of § 80.49(a), toxics emissions need not be measured. However, EPA reserves the right to require the inclusion of such measurements in the test program prior to approval of the test program if evidence exists which suggests that adverse interactive effects of the parameter in question may exist for toxics emissions.

(b) The general requirements per 40 CFR 86.130–96 shall be met.

(c) The engine starting and restarting procedures per 40 CFR 86.136–90 shall be followed.

(d) Except as provided for at § 80.59, general preparation of vehicles being tested shall follow procedures detailed in 40 CFR 86.130–96 and 86.131–96.

§ 80.51 Vehicle test procedures.

The test sequence applicable when augmenting the emission models through vehicle testing is as follows:

(a) Prepare vehicles per § 80.50.

(b) Initial preconditioning per § 80.52(a)(1). Vehicles shall be refueled randomly with the fuels required in § 80.49 when testing to augment the complex emission model.

(c) Exhaust emissions tests, dynamometer procedure per 40 CFR 86.137–90 with:

(1) Exhaust Benzene and 1,3–Butadiene emissions measured per § 80.55; and

(2) Formaldehyde and Acetelaldehyde emissions measured per § 80.56.

§ 80.52 Vehicle preconditioning.

(a) Initial vehicle preconditioning and preconditioning between tests with different fuels shall be performed in accordance with the ''General vehicle handling requirements'' per 40 CFR 86.132–96, up to and including the completion of the hot start exhaust test.

(b) The preconditioning procedure prescribed at 40 CFR 86.132–96 shall be observed for preconditioning vehicles between tests using the same fuel.

§§ 80.53–80.54 [Reserved]

§ 80.55 Measurement methods for benzene and 1,3-butadiene.

(a) Sampling for benzene and 1,3-butadiene must be accomplished by bag sampling as used for total hydrocarbons determination. This procedure is detailed in 40 CFR 86.109.

(b) Benzene and 1,3-butadiene must be analyzed by gas chromatography. Expected values for benzene and 1,3-butadiene in bag samples for the baseline fuel are 4.0 ppm and 0.30 ppm respectively. At least three standards ranging from at minimum 50% to 150% of these expected values must be used to calibrate the detector. An additional standard of at most 0.01 ppm must also be measured to determine the required limit of quantification as described in paragraph (d) of this section.

(c) The sample injection size used in the chromatograph must be sufficient to be above the laboratory determined limit of quantification (LOQ) as defined in paragraph (d) of this section for at least one of the bag samples. A control chart of the measurements of the standards used to determine the response, repeatability, and limit of quantitation of the instrumental method for 1,3-butadiene and benzene must be reported.

(d) As in all types of sampling and analysis procedures, good laboratory practices must be used. See, Lawrence, Principals of Environmental Analysis, 55 Analytical Chemistry 14, at 2210–2218 (1983) (copies may be obtained from the publisher, American Chemical Society, 1155 16th Street NW., Washington, DC

20036). Reporting reproducibility control charts and limits of detection measurements are integral procedures to assess the validity of the chosen analytical method. The repeatability of the test method must be determined by measuring a standard periodically during testing and recording the measured values on a control chart. The control chart shows the error between the measured standard and the prepared standard concentration for the periodic testing. The error between the measured standard and the actual standard indicates the uncertainty in the analysis. The limit of detection (LOD) is determined by repeatedly measuring a blank and a standard prepared at a concentration near an assumed value of the limit of detection. If the average concentration minus the average of the blanks is greater than three standard deviations of these measurements, then the limit of detection is at least as low as the prepared standard. The limit of quantitation (LOQ) is defined as ten times the standard deviation of these measurements. This quantity defines the amount of sample required to be measured for a valid analysis.

(e) Other sampling and analytical techniques will be allowed if they can be proven to have equal specificity and equal or better limits of quantitation. Data from alternative methods that can be demonstrated to have equivalent or superior limits of detection, precision, and accuracy may be accepted by the Administrator with individual prior approval.

§ 80.56 Measurement methods for formaldehyde and acetaldehyde.

(a) Formaldehyde and acetaldehyde will be measured by drawing exhaust samples from heated lines through either 2,4–Dinitrophenylhydrazine (DNPH) impregnated cartridges or impingers filled with solutions of DNPH in acetonitrile (ACN) as described in §§ 86.109 and 86.140 of this chapter for formaldehyde analysis. Diluted exhaust sample volumes must be at least 15 L for impingers containing 20 ml of absorbing solution (using more absorbing solution in the impinger requires proportionally more gas sample to be taken) and at least 4 L for cartridges. As required in § 86.109 of this chapter, two impingers or cartridges must be connected in series to detect breakthrough of the first impinger or cartridge.

(b) In addition, sufficient sample must be drawn through the collecting cartridges or impingers so that the measured quantity of aldehyde is sufficiently greater than the minimum limit of quantitation of the test method for at least a portion of the exhaust test procedure. The limit of quantitation is determined using the technique defined in § 80.55(d).

(c) Each of the impinger samples are quantitatively transferred to a 25 mL volumetric flask (5 mL more than the sample impinger volume) and brought to volume with ACN. The cartridge samples are eluted in reversed direction by gravity feed with 6mL of ACN. The eluate is collected in a graduated test tube and made up to the 5mL mark with ACN. Both the impinger and cartridge samples must be analyzed by HPLC without additional sample preparation.

(d) The analysis of the aldehyde derivatives collected is accomplished with a high performance liquid chromatograph (HPLC). Standards consisting of the hydrazone derivative of formaldehyde and acetaldehyde are used to determine the response, repeatability, and limit of quantitation of the HPLC method chosen for acetaldehyde and formaldehyde.

(e) Other sampling and analytical techniques will be allowed if they can be proven to have equal specificity and equal or better limits of quantitation. Data from alternative methods that can be demonstrated to have equivalent or superior limits of detection, precision, and accuracy may be accepted by the Administrator with individual prior approval.

§§ 80.57–80.58 [Reserved]

§ 80.59 General test fleet requirements for vehicle testing.

(a) The test fleet must consist of only 1989–91 MY vehicles which are technologically equivalent to 1990 MY vehicles, or of 1986–88 MY vehicles for which no changes to the engine or exhaust system that would significantly affect emissions have been made

through the 1990 model year. To be technologically equivalent vehicles at minimum must have closed-loop systems and possess adaptive learning.

(b) No maintenance or replacement of any vehicle component is permitted except when necessary to ensure operator safety or as specifically permitted in § 80.60 and § 80.61. All vehicle maintenance procedures must be reported to the Administrator.

(c) Each vehicle in the test fleet shall have no fewer than 4,000 miles of accumulated mileage prior to being included in the test program.

[59 FR 7813, Feb. 16, 1994, as amended at 59 FR 36962, July 20, 1994]

§ 80.60 Test fleet requirements for exhaust emission testing.

(a) Candidate vehicles which conform to the emission performance requirements defined in paragraphs (b) through (d) of this section shall be obtained directly from the in-use fleet and tested in their as-received condition.

(b) Candidate vehicles for the test fleet must be screened for their exhaust VOC emissions in accordance with the provisions in § 80.62.

(c) On the basis of pretesting pursuant to paragraph (b) of this section, the test fleet shall be subdivided into two emitter group sub-fleets: the normal emitter group and the higher emitter group.

(1) Each vehicle with an exhaust total hydrocarbon (THC) emissions rate which is less than or equal to twice the applicable emissions standard shall be placed in the normal emitter group.

(2) Each vehicle with an exhaust THC emissions rate which is greater than two times the applicable emissions standard shall be placed in the higher emitter group.

(d) The test vehicles in each emitter group must conform to the requirements of paragraphs (d)(1) through (4) of this section.

(1) Test vehicles for the normal emitter sub-fleet must be selected from the list shown in this paragraph (d)(1). This list is arranged in order of descending vehicle priority, such that the order in which vehicles are added to the normal emitter sub-fleet must conform to the order shown (e.g., a ten-vehicle normal emitter group sub-fleet must consist of the first ten vehicles listed in this paragraph (d)(1)). If more vehicles are tested than the minimum number of vehicles required for the normal emitter sub-fleet, additional vehicles are to be added to the fleet in the order specified in this paragraph (d)(1), beginning with the next vehicle not already included in the group. The vehicles in the normal emitter sub-fleet must possess the characteristics indicated in the list. If the end of the list is reached in adding vehicles to the normal emitter sub-fleet and additional vehicles are desired then they shall be added beginning with vehicle number one, and must be added to the normal emitter sub-fleet in accordance with the order in table A:

TABLE A—TEST FLEET DEFINITIONS

Veh. No.	Fuel system	Catalyst	Air injection	EGR	Tech. group	Manufacturer
1	Multi	3W	No Air	EGR	1	GM.
2	Multi	3W	No Air	No EGR	2	Ford.
3	TBI	3W	No Air	EGR	3	GM.
4	Multi	3W+OX	Air	EGR	4	Ford.
5	Multi	3W	No Air	EGR	1	Honda.
6	Multi	3W	No Air	No EGR	2	GM.
7	TBI	3W	No Air	EGR	3	Chrysler.
8	Multi	3W+OX	Air	EGR	4	GM.
9	TBI	3W+OX	Air	EGR	7	Chrysler.
10	Multi	3W	Air	EGR	5	Toyota.
11	Multi	3W	No Air	EGR	1	Ford.
12	Multi	3W	No Air	No EGR	2	Chrysler.
13	Carb	3W+OX	Air	EGR	9	Toyota.
14	TBI	3W	No Air	EGR	3	Ford.
15	Multi	3W+OX	Air	EGR	4	GM.
16	Multi	3W	No Air	EGR	1	Toyota.
17	Multi	3W	No Air	No EGR	2	Mazda.
18	TBI	3W	No Air	EGR	3	GM.

TABLE A—TEST FLEET DEFINITIONS—Continued

Veh. No.	Fuel system	Catalyst	Air injection	EGR	Tech. group	Manufacturer
19	Multi	3W+OX	Air	EGR	4	Ford.
20	Multi	3W	No Air	EGR	1	Nissan.

TABLE B—TECH GROUP DEFINITIONS IN TABLE A

Tech group	Fuel system	Catalyst	Air injection	EGR
1	Multi	3W	No Air	EGR.
2	Multi	3W	No Air	No EGR.
3	TBI	3W	No Air	EGR.
4	Multi	3W+OX	Air	EGR.
5	Multi	3W	Air	EGR.
6	TBI	3W	Air	EGR.
7	TBI	3W+OX	Air	EGR.
8	TBI	3W	No Air	No EGR.
9	Carb	3W+OX	Air	EGR.

Legend:

Fuel system:
Multi = Multi-point fuel injection
TBI = Throttle body fuel injection
Carb = Carburetted

Catalyst:
3W = 3–Way catalyst
3W+OX = 3–Way catalyst plus an oxidation catalyst

Air Injection:
Air = Air injection

EGR = Exhaust gas recirculation

(2) Test vehicles for the higher emitter sub-fleet shall be selected from the in-use fleet in accordance with paragraphs (a) and (b) of this section and with § 80.59. Test vehicles for the higher emitter sub-fleet are not required to follow the pattern established in paragraph (d)(1) of this section.

(3) The minimum test fleet size is 20 vehicles. Half of the vehicles tested must be included in the normal emitter sub-fleet and half of the vehicles tested must be in the higher emitter sub-fleet. If additional vehicles are tested beyond the minimum of twenty vehicles, the additional vehicles shall be distributed equally between the normal and higher emitter sub-fleets.

(4) For each emitter group sub-fleet, 70 ± 9.5% of the sub-fleet must be LDVs, & 30 ± 9.5% must be LDTs. LDTs include light-duty trucks class 1 (LDT1), and light-duty trucks class 2 (LDT2) up to 8500 lbs GVWR.

§ 80.61 [Reserved]

§ 80.62 Vehicle test procedures to place vehicles in emitter group sub-fleets.

One of the two following test procedures must be used to screen candidate vehicles for their exhaust THC emissions to place them within the emitter group sub-fleets in accordance with the requirements of § 80.60.

(a) Candidate vehicles may be tested for their exhaust THC emissions using the Federal test procedure as detailed in 40 CFR part 86, with gasoline conforming to requirements detailed in 40 CFR 86.113–90. The results shall be used in accordance with the requirements in § 80.60 to place the vehicles within their respective emitter groups.

(b) Alternatively, candidate vehicles may be screened for their exhaust THC emissions with the IM240 short test procedure.[1] The results from the IM240 shall be converted into results comparable with the standard exhaust FTP as detailed in this paragraph (b) to place the vehicles within their respective emitter groups in accordance with the requirements of § 80.60.

[1] EPA Technical Report EPA–AA–TSS–91–1. Copies may be obtained by ordering publication number PB92104405 from the National Technical Information Service, 5285 Port Royal Road, Springfield, Virginia 22161.

(1) A candidate vehicle with IM240 test results <0.367 grams THC per vehicle mile shall be classified as a normal emitter.

(2) A candidate vehicle with IM240 test results ≥0.367 grams THC per vehicle mile shall be classified as a higher emitter.

§§ 80.63–80.64 [Reserved]

§ 80.65 General requirements for refiners, importers, and oxygenate blenders.

(a) *Date requirements begin.* The requirements of this subpart D apply to all gasoline produced, imported, transported, stored, sold, or dispensed:

(1) At any location other than retail outlets and wholesale purchaser-consumer facilities on or after December 1, 1994; and

(2) At any location on or after January 1, 1995.

(b) *Certification of gasoline and RBOB.* Gasoline or RBOB sold or dispensed in a covered area must be certified under § 80.40.

(c) *Standards must be met on either a per-gallon or on an average basis.* (1) Any refiner or importer, for each batch of reformulated gasoline or RBOB it produces or imports, shall meet:

(i) Those standards and requirements it designated under paragraph (d) of this section for per-gallon compliance on a per-gallon basis; and

(ii) Those standards and requirements it designated under paragraph (d) of this section for average compliance on an average basis over the applicable averaging period; except that

(iii) Refiners and importers are not required to meet the oxygen standard for RBOB.

(2) Any oxygenate blender, for each batch of reformulated gasoline it produces by blending oxygenate with RBOB shall, subsequent to the addition of oxygenate, meet the oxygen standard either per-gallon or average over the applicable averaging period.

(3)(i) For each averaging period, and separately for each parameter that may be met either per-gallon or on average, any refiner shall designate for each refinery, and any importer or oxygenate blender shall designate, its gasoline or RBOB as being subject to the standard applicable to that parameter on either a per-gallon or average basis. For any specific averaging period and parameter all batches of gasoline or RBOB shall be designated as being subject to the per-gallon standard, or all batches of gasoline and RBOB shall be designated as being subject to the average standard. For any specific averaging period and parameter a refiner for a refinery, or any importer or oxygenate blender, may not designate certain batches as being subject to the per-gallon standard and others as being subject to the average standard.

(ii) In the event any refiner for a refinery, or any importer or oxygenate blender, fails to meet the requirements of paragraph (c)(3)(i) of this section and for a specific averaging period and parameter designates certain batches as being subject to the per-gallon standard and others as being subject to the average standard, all batches produced or imported during the averaging period that were designated as being subject to the average standard shall, *ab initio,* be redesignated as being subject to the per- gallon standard. This redesignation shall apply regardless of whether the batches in question met or failed to meet the per-gallon standard for the parameter in question.

(d) *Designation of gasoline.* Any refiner or importer of gasoline shall designate the gasoline it produces or imports as follows:

(1) All gasoline produced or imported shall be properly designated as either reformulated or conventional gasoline, or as RBOB.

(2) All gasoline designated as reformulated or as RBOB shall be further properly designated as:

(i) Either VOC-controlled or not VOC-controlled;

(ii) In the case of gasoline or RBOB designated as VOC-controlled, either intended for use in VOC-Control Region 1 or VOC-Control Region 2 (as defined in § 80.71);

(iii) [Reserved]

(A) Gasoline must be designated as oxygenated fuels program reformulated gasoline if such gasoline:

(*1*) Has an oxygen content that is greater than or equal to 2.0 weight percent; and

(*2*) Arrives at a terminal from which gasoline is dispensed into trucks used

to deliver gasoline to an oxygenated fuels control area within five days prior to the beginning of the oxygenated fuels control period for that control area.

(B) Gasoline may be designated as oxygenated fuels program reformulated gasoline if such gasoline has an oxygen content that is greater than or equal to 2.0 weight percent, regardless of whether the gasoline is intended for use in any oxygenated fuels program control area during an oxygenated fuels program control period.

(iv) For gasoline or RBOB produced, imported, sold, dispensed or used during the period January 1, 1995 through December 31, 1997, either as being subject to the simple model standards, or to the complex model standards;

(v) For each of the following parameters, either gasoline or RBOB which meets the standard applicable to that parameter on a per-gallon basis or on average:

(A) Toxics emissions performance;

(B) NO_X emissions performance in the case of gasoline certified using the complex model.

(C) Benzene content;

(D) With the exception of RBOB, oxygen content;

(E) In the case of VOC-controlled gasoline or RBOB certified using the simple model, RVP; and

(F) In the case of VOC-controlled gasoline or RBOB certified using the complex model, VOC emissions performance; and

(vi) In the case of RBOB, as RBOB that may be blended with:

(A) Any oxygenate;

(B) Ether only;

(C) Any renewable oxygenate;

(D) Renewable ether only;

(E) Non-VOC controlled renewable ether only.

(3) Every batch of reformulated or conventional gasoline or RBOB produced or imported at each refinery or import facility, or each batch of blendstock produced and sold or transferred if blendstock accounting is required under § 80.102(e), shall be assigned a number (the ''batch number''), consisting of the EPA-assigned refiner, importer or oxygenate blender registration number, the EPA-assigned facility registration number, the last two digits of the year in which the batch was produced, and a unique number for the batch, beginning with the number one for the first batch produced or imported each calendar year and each subsequent batch during the calendar year being assigned the next sequential number (e.g., 4321–54321–95–000001, 4321–54321–95–000002, etc.).

(e) *Determination of properties.* (1) Each refiner or importer shall determine the value of each of the properties specified in paragraph (e)(2)(i) of this section for each batch of reformulated gasoline it produces or imports prior to the gasoline leaving the refinery or import facility, by collecting and analyzing a representative sample of gasoline taken from the batch, using the methodologies specified in § 80.46. This collection and analysis shall be carried out either by the refiner or importer, or by an independent laboratory. A batch of simple model reformulated gasoline may be released by the refiner or importer prior to the receipt of the refiner's or importer's test results except for test results for oxygen and benzene, and RVP in the case of VOC-controlled gasoline.

(2) In the event that the values of any of these properties is determined by the refiner or importer and by an independent laboratory in conformance with the requirements of paragraph (f) of this section:

(i) The results of the analyses conducted by the refiner or importer for such properties shall be used as the basis for compliance determinations unless the absolute value of the differences of the test results from the two laboratories is larger than the following values:

Fuel property	Range
Sulfur content	25 ppm
Aromatics content	2.7 vol %
Olefins content	2.5 vol %
Benzene content	0.21 vol %
Ethanol content	0.4 vol %
Methanol content	0.2 vol %
MTBE (and other methyl ethers) content	0.6 vol %
ETBE (and other ethyl ethers) content	0.6 vol %
TAME	0.6 vol %
t-Butanol content	0.6 vol %
RVP	0.3 psi
50% distillation (T50)	5 °F
90% distillation (T90)	5 °F
E200	2.5 vol %
E300	3.5 vol %
API Gravity	0.3 °API

(ii) In the event the values from the two laboratories for any property fall outside these ranges, the refiner or importer shall use as the basis for compliance determinations:

(A) The larger of the two values for the property, except the smaller of the two results shall be used for oxygenates; or

(B) The refiner shall have the gasoline analyzed for the property at one additional independent laboratory. If this second independent laboratory obtains a result for the property that is within the range, as listed in paragraph (e)(2)(i) of this section, of the refiner's or importer's result for this property, then the refiner's or importer's result shall be used as the basis for compliance determinations.

(f) *Independent analysis requirement.* (1) Any refiner or importer of reformulated gasoline or RBOB shall carry out a program of independent sample collection and analyses for the reformulated gasoline it produces or imports, which meets the requirements of one of the following two options:

(i) *Option 1.* The refiner or importer shall, for each batch of reformulated gasoline or RBOB that is produced or imported, have the value for each property specified in paragraph (e)(2)(i) of this section determined by an independent laboratory that collects and analyzes a representative sample from the batch using the methodologies specified in § 80.46.

(ii) *Option 2.* The refiner or importer shall have a periodic independent testing program carried out for all reformulated gasoline produced or imported, which shall consist of the following:

(A) An independent laboratory shall collect a representative sample from each batch of reformulated gasoline that the refiner or importer produces or imports;

(B) EPA will identify up to ten percent of the total number of samples collected under paragraph (f)(1)(ii)(A) of this section; and

(C) The designated independent laboratory shall, for each sample identified by EPA under paragraph (f)(1)(ii)(B) of this section, determine the value for each property using the methodologies specified in § 80.46.

(2)(i) Any refiner or importer shall designate one independent laboratory for each refinery or import facility at which reformulated gasoline or RBOB is produced or imported. This independent laboratory will collect samples and perform analyses in compliance with the requirements of this paragraph (f) of this section.

(ii) Any refiner or importer shall identify this designated independent laboratory to EPA under the registration requirements of § 80.76.

(iii) In order to be considered independent:

(A) The laboratory shall not be operated by any refiner or importer, and shall not be operated by any subsidiary or employee of any refiner or importer;

(B) The laboratory shall be free from any interest in any refiner or importer; and

(C) The refiner or importer shall be free from any interest in the laboratory; however

(D) Notwithstanding the restrictions in paragraphs (f)(2)(iii) (A) through (C) of this section, a laboratory shall be considered independent if it is owned or operated by a gasoline pipeline company, regardless of ownership or operation of the gasoline pipeline company by refiners or importers, provided that such pipeline company is owned and operated by four or more refiners or importers.

(iv) Use of a laboratory that is debarred, suspended, or proposed for debarment pursuant to the Governmentwide Debarment and Suspension regulations, 40 CFR part 32, or the Debarment, Suspension and Ineligibility provisions of the Federal Acquisition Regulations, 48 CFR part 9, subpart 9.4, shall be deemed noncompliance with the requirements of this paragraph (f).

(v) Any laboratory that fails to comply with the requirements of this paragraph (f) shall be subject to debarment or suspension under Governmentwide Debarment and Suspension regulations, 40 CFR part 32, or the Debarment, Suspension and Ineligibility regulations, Federal Acquisition Regulations, 48 CFR part 9, subpart 9.4.

(3) Any refiner or importer shall, for all samples collected or analyzed pursuant to the requirements of this paragraph (f), cause its designated independent laboratory:

(i) At the time the designated independent laboratory collects a representative sample from a batch of reformulated gasoline, to:

(A) Obtain the refiner's or importer's assigned batch number for the batch being sampled;

(B) Determine the volume of the batch;

(C) Determine the identification number of the gasoline storage tank or tanks in which the batch was stored at the time the sample was collected;

(D) Determine the date and time the batch became finished reformulated gasoline, and the date and time the sample was collected;

(E) Determine the grade of the batch (e.g., premium, mid-grade, or regular); and

(F) In the case of reformulated gasoline produced through computer-controlled in-line blending, determine the date and time the blending process began and the date and time the blending process ended, unless exempt under paragraph (f)(4) of this section;

(ii) To retain each sample collected pursuant to the requirements of this paragraph (f) for a period of 30 days, except that this period shall be extended to a period of up to 180 days upon request by EPA;

(iii) To submit to EPA periodic reports, as follows:

(A) A report for the period January through March shall be submitted by May 31; a report for the period April through June shall be submitted by August 31; a report for the period July through September shall be submitted by November 30; and a report for the period October through December shall be submitted by February 28;

(B) Each report shall include, for each sample of reformulated gasoline that was analyzed pursuant to the requirements of this paragraph (f):

(*1*) The results of the independent laboratory's analyses for each property; and

(*2*) The information specified in paragraph (f)(3)(i) of this section for such sample; and

(iv) To supply to EPA, upon EPA's request, any sample collected or a portion of any such sample.

(4) Any refiner that produces reformulated gasoline using computer-controlled in-line blending equipment is exempt from the independent sampling and testing requirements specified in paragraphs (f)(1) through (3) of this section and from the requirement of paragraph (e)(1) of this section to obtain test results for each batch prior to the gasoline leaving the refinery, provided that such refiner:

(i) Obtains from EPA an exemption from these requirements. In order to seek such an exemption, the refiner shall submit a petition to EPA, such petition to include:

(A) A description of the refiner's computer-controlled in-line blending operation, including a description of:

(*1*) The location of the operation;

(*2*) The length of time the refiner has used the operation;

(*3*) The volumes of gasoline produced using the operation since the refiner began the operation or during the previous three years, whichever is shorter, by grade;

(*4*) The movement of the gasoline produced using the operation to the point of fungible mixing, including any points where all or portions of the gasoline produced is accumulated in gasoline storage tanks;

(*5*) The physical lay-out of the operation;

(*6*) The automated control system, including the method of monitoring and controlling blend properties and proportions;

(*7*) Any sampling and analysis of gasoline that is conducted as a part of the operation, including on-line, off-line, and composite, and a description of the methods of sampling, the methods of analysis, the parameters analyzed and the frequency of such analyses, and any written, printed, or computer-stored results of such analyses, including information on the retention of such results;

(*8*) Any sampling and analysis of gasoline produced by the operation that occurs downstream from the blending operation prior to fungible mixing of the gasoline, including any such sampling and analysis by the refiner and

by any purchaser, pipeline or other carrier, or by independent laboratories;

(*9*) Any quality assurance procedures that are carried out over the operation; and

(*10*) Any occasion(s) during the previous three years when the refiner adjusted any physical or chemical property of any gasoline produced using the operation downstream from the operation, including the nature of the adjustment and the reason the gasoline had properties that required adjustment; and

(B) A description of the independent audit program of the refiner's computer-controlled in-line blending operation that the refiner proposes will satisfy the requirements of this paragraph (f)(4); and

(ii) Carries out an independent audit program of the refiner's computer-controlled in-line blending operation, such program to include:

(A) For each batch of reformulated gasoline produced using the operation, a review of the documents generated that is sufficient to determine the properties and volume of the gasoline produced;

(B) Audits that occur no less frequently than annually;

(C) Reports of the results of such audits submitted to the refiner, and to EPA by the auditor no later than February 28 of each year;

(D) Audits that are conducted by an auditor that meets the non-debarred criteria specified in § 80.125 (a) and/or (d); and

(iii) Complies with any other requirements that EPA includes as part of the exemption.

(g) *Marking of conventional gasoline.* [Reserved]

(h) *Compliance audits.* Any refiner and importer of any reformulated gasoline or RBOB, and any oxygenate blender of any RBOB who meets the oxygen standard on average, shall have the reformulated gasoline and RBOB it produced, imported, or blended during each calendar year audited for compliance with the requirements of this subpart D, in accordance with the requirements of subpart F, at the conclusion of each calendar year.

(i) *Exclusion from compliance calculations of gasoline received from others.* Any refiner for each refinery, any oxygenate blender for each oxygenate blending facility, and any importer shall exclude from all compliance calculations the volume and properties of any reformulated gasoline that is produced at another refinery or oxygenate blending facility or imported by another importer.

[59 FR 7813, Feb. 16, 1994, as amended at 59 FR 36962, July 20, 1994; 59 FR 39289, Aug. 2, 1994; 59 FR 60715, Nov. 28, 1994; 62 FR 60135, Nov. 6, 1997]

EFFECTIVE DATE NOTE: At 59 FR 39289, Aug. 2, 1994, § 80.65 was amended by revising paragraph (d)(2)(vi) effective September 1, 1994. At 59 FR 60715, Nov. 28, 1994, the amendment was stayed effective September 13, 1994.

§ 80.66 Calculation of reformulated gasoline properties.

(a) All volume measurements required by these regulations shall be temperature adjusted to 60 degrees Fahrenheit.

(b) The percentage of oxygen by weight contained in a gasoline blend, based upon its percentage oxygenate by volume and density, shall exclude denaturants and water.

(c) The properties of reformulated gasoline consist of per-gallon values separately and individually determined on a batch-by-batch basis using the methodologies specified in § 80.46 for each of those physical and chemical parameters necessary to determine compliance with the standards to which the gasoline is subject, and per-gallon values for the VOC, NO_x, and toxics emissions performance standards to which the gasoline is subject.

(d) Per-gallon oxygen content shall be determined based upon the weight percent oxygen of a representative sample of gasoline, using the method set forth in § 80.46(g). The total oxygen content associated with a batch of gasoline (in percent-gallons) is calculated by multiplying the weight percent oxygen content times the volume.

(e) Per-gallon benzene content shall be determined based upon the volume percent benzene of a representative sample of a batch of gasoline by the method set forth in § 80.46(e). The total benzene content associated with a batch of gasoline (in percent-gallons) is calculated by multiplying the volume

percent benzene content times the volume.

(f) Per-gallon RVP shall be determined based upon the measurement of RVP of a representative sample of a batch of gasoline by the sampling methodologies specified in appendix D of this part and the testing methodology specified in appendix E of this part. The total RVP value associated with a batch of gasoline (in RVP-gallons) is calculated by multiplying the RVP times the volume.

(g)(1) Per gallon values for VOC and NO_X emissions reduction shall be calculated using the methodology specified in § 80.45 that is appropriate for the gasoline.

(2) Per-gallon values for toxic emissions performance reduction shall be established using:

(i) For gasoline subject to the simple model, the methodology under § 80.42 that is appropriate for the gasoline; and

(ii) For gasoline subject to the complex model, the methodology specified in § 80.45 that is appropriate for the gasoline.

(3) The total VOC, NO_X, and toxic emissions performance reduction values associated with a batch of gasoline (in percent reduction-gallons) is calculated by multiplying the per-gallon percent emissions performance reduction times the volume of the batch.

[59 FR 7813, Feb. 16, 1994, as amended at 59 FR 36963, July 20, 1994]

§ 80.67 Compliance on average.

The requirements of this section apply to all reformulated gasoline and RBOB produced or imported for which compliance with one or more of the requirements of § 80.41 is determined on average (''averaged gasoline'').

(a) *Compliance survey required in order to meet standards on average.* (1) Any refiner, importer, or oxygenate blender that complies with the compliance survey requirements of § 80.68 has the option of meeting the standards specified in § 80.41 for average compliance in addition to the option of meeting the standards specified in § 80.41 for per-gallon compliance; any refiner, importer, or oxygenate blender that does not comply with the survey requirements must meet the standards specified in § 80.41 for per-gallon compliance, and does not have the option of meeting standards on average.

(2)(i)(A) A refiner or importer that produces or imports reformulated gasoline that exceeds the average standards for oxygen or benzene (but not for other parameters that have average standards) may use such gasoline to offset reformulated gasoline which does not achieve such average standards, but only if the reformulated gasoline that does not achieve such average standards is sold to ultimate consumers in the same covered area as was the reformulated gasoline which exceeds average standards; provided that

(B) Prior to the beginning of the averaging period when the averaging approach described in paragraph (a)(2)(i)(A) of this section is used, the refiner or importer obtains approval from EPA. In order to seek such approval, the refiner or importer shall submit a petition to EPA, such petition to include:

(*1*) The identification of the refiner and refinery, or importer, the covered area, and the averaging period; and

(*2*) A detailed description of the procedures the refiner or importer will use to ensure the gasoline is produced by the refiner or is imported by the importer and is used only in the covered area in question and is not used in any other covered area, and the record keeping, reporting, auditing, and other quality assurance measures that will be followed to establish the gasoline is used as intended; and

(C) The refiner or importer properly completes any requirements that are specified by EPA as conditions for approval of the petition.

(ii) Any refiner or importer that meets the requirements of paragraph (a)(2)(i) of this section will be deemed to have satisfied the compliance survey requirements of § 80.68 for the covered area in question.

(b) *Scope of averaging.* (1) Any refiner shall meet all applicable averaged standards separately for each of the refiner's refineries;

(2)(i) Any importer shall meet all applicable averaged standards on the basis of all averaged reformulated gasoline and RBOB imported by the importer; except that

(ii) Any importer to whom different standards apply for gasoline imported at different facilities by operation of § 80.41(i), shall meet the averaged standards separately for the averaged reformulated gasoline and RBOB imported into each group of facilities that is subject to the same standards; and

(3) Any oxygenate blender shall meet the averaged standard for oxygen separately for each of the oxygenate blender's oxygenate blending facilities, except that any oxygenate blender may group the averaged reformulated gasoline produced at facilities at which gasoline is produced for use in a single covered area.

(c) *RVP and VOC emissions performance reduction compliance on average.* (1) The VOC-controlled reformulated gasoline and RBOB produced at any refinery or imported by any importer during the period January 1 through September 15 of each calendar year which is designated for average compliance for RVP or VOC emissions performance on average must meet the standards for RVP (in the case of a refinery or importer subject to the simple model standards) or the standards for VOC emissions performance reduction (in the case of a refinery or importer subject to the complex model standards) which are applicable to that refinery or importer as follows:

(i) Gasoline and RBOB designated for VOC Control Region 1 must meet the standards for that Region which are applicable to that refinery or importer; and

(ii) Gasoline and RBOB designated for VOC Control Region 2 must meet the standards for that Region which are applicable to that refinery or importer.

(2) In the case of a refinery or importer subject to the simple model standards, each gallon of reformulated gasoline and RBOB designated as being VOC-controlled may not exceed the maximum standards for RVP specified in § 80.41(b) which are applicable to that refiner or importer.

(3) In the case of a refinery or importer subject to the complex model standards, each gallon of reformulated gasoline designated as being VOC-controlled must equal or exceed the minimum standards for VOC emissions performance specified in § 80.41 which are applicable to that refinery or importer.

(d) *Toxics emissions reduction and benzene compliance on average.* (1) The averaging period for the requirements for benzene content and toxics emission performance is January 1 through December 31 of each year.

(2) The reformulated gasoline and RBOB produced at any refinery or imported by any importer during the toxics emissions performance and benzene averaging periods that is designated for average compliance for these parameters shall on average meet the standards specified for toxics emissions performance and benzene in § 80.41 which are applicable to that refinery or importer.

(3) Each gallon of reformulated gasoline may not exceed the maximum standard for benzene content specified in § 80.41 which is applicable to that refinery or importer.

(e) *NO_X compliance on average.* (1) The averaging period for NO_X emissions performance is January 1 through December 31 of each year.

(2) The requirements of this paragraph (e) apply separately to reformulated gasoline and RBOB in the following categories:

(i) All reformulated gasoline and RBOB that is designated as VOC-controlled; and

(ii) All reformulated gasoline and RBOB that is not designated as VOC-controlled.

(3) The reformulated gasoline and RBOB produced at any refinery or imported by any importer during the NO_X averaging period that is designated for average compliance for NO_X shall on average meet the standards for NO_X specified in § 80.41 that are applicable to that refinery or importer.

(f) *Oxygen compliance on average.* (1) The averaging period for the oxygen content requirements is January 1 through December 31 of each year.

(2) The requirements of this paragraph (f) apply separately to reformulated gasoline in the following categories:

(i) All reformulated gasoline;

(ii) [Reserved]

(iii) In the case of reformulated gasoline certified under the simple model,

that which is designated as VOC- controlled.

(3) The reformulated gasoline produced at any refinery or imported by any importer during the oxygen averaging period that is designated for average compliance for oxygen shall on average meet the standards for oxygen specified in § 80.41 that is applicable to that refinery or importer.

(4) The reformulated gasoline that is produced at any oxygenate blending facility by blending RBOB with oxygenate that is designated for average compliance for oxygen shall on average meet the standards for oxygen specified in § 80.41 that is applicable to that oxygenate blending facility.

(5) Each gallon of reformulated gasoline must meet the applicable minimum requirements, and in the case of simple model reformulated gasoline the minimum and maximum requirements, for oxygen content specified in § 80.41.

(g) *Compliance calculation.* To determine compliance with the averaged standards in § 80.41, any refiner for each of its refineries at which averaged reformulated gasoline or RBOB is produced, any oxygenate blender for each of its oxygenate blending facilities at which oxygen averaged reformulated gasoline is produced, and any importer that imports averaged reformulated gasoline or RBOB shall, for each averaging period and for each portion of gasoline for which standards must be separately achieved, and for each relevant standard, calculate:

(1)(i) The compliance total using the following formula:

$$\text{COMPLIANCE TOTAL} = \left(\sum_{i=1}^{n} V_i\right) \times \text{std}$$

where

V_i = the volume of gasoline batch i

std = the standard for the parameter being evaluated

n = the number of batches of gasoline produced or imported during the averaging period

and

(ii) The actual total using the following formula:

$$\text{ACTUAL TOTAL} = \sum_{i=1}^{n} (V_i \times \text{parm}_i)$$

where

V_i = the volume of gasoline batch i

parm_i = the parameter value of gasoline batch i

n = the number of batches of gasoline produced or imported during the averaging period

(2) For each standard, compare the actual total with the compliance total.

(3) For the VOC, NO_X, and toxics emissions performance and oxygen standards, the actual totals must be equal to or greater than the compliance totals to achieve compliance.

(4) For RVP and benzene standards, the actual total must be equal to or less than the compliance totals to achieve compliance.

(5) If the actual total for the oxygen standard is less than the compliance total, or if the actual total for the benzene standard is greater than the compliance total, credits for these parameters must be obtained from another refiner, importer or (in the case of oxygen) oxygenate blender in order to achieve compliance:

(i) The total number of oxygen credits required to achieve compliance is calculated by subtracting the actual total from the compliance total oxygen; and

(ii) The total number of benzene credits required to achieve compliance is calculated by subtracting the compliance total from the actual total benzene.

(6) If the actual total for the oxygen standard is greater than the compliance total, or if the actual total for the benzene standard is less than the compliance totals, credits for these parameters are generated:

(i) The total number of oxygen credits which may be traded to another refinery, importer, or oxygenate blender is calculated by subtracting the compliance total from the actual total for oxygen; and

(ii) The total number of benzene credits which may be traded to another refinery or importer is calculated by subtracting the actual total from the compliance total for benzene.

(h) *Credit transfers.* (1) Compliance with the averaged standards specified in § 80.41 for oxygen and benzene (but for no other standards or requirements) may be achieved through the transfer of oxygen and benzene credits provided that:

(i) The credits were generated in the same averaging period as they are used;

(ii) The credit transfer takes place no later than fifteen working days following the end of the averaging period in which the reformulated gasoline credits were generated;

(iii) The credits are properly created;

(iv) The credits are transferred directly from the refiner, importer, or oxygenate blender that creates the credits to the refiner, importer, or oxygenate blender that uses the credits to achieve compliance;

(v) Oxygen credits are generated, transferred, and used:

(A) In the case of gasoline subject to the simple model standards, only in the following categories:

(*1*) VOC-controlled; and

(*2*) Non-VOC-controlled.

(B) [Reserved]

(vi) Oxygen credits generated from gasoline subject to the complex model standards are not used to achieve compliance for gasoline subject to the simple model standards;

(vii) Oxygen credits are not used to achieve compliance with the minimum oxygen content standards in § 80.41; and

(viii) Benzene credits are not used to achieve compliance with the maximum benzene content standards in § 80.41.

(2) No party may transfer any credits to the extent such a transfer would result in the transferor having a negative credit balance at the conclusion of the averaging period for which the credits were transferred. Any credits transferred in violation of this paragraph are improperly created credits.

(3) In the case of credits that were improperly created, the following provisions apply:

(i) Improperly created credits may not be used to achieve compliance, regardless of a credit transferee's good faith belief that it was receiving valid credits;

(ii) No refiner, importer, or oxygenate blender may create, report, or transfer improperly created credits; and

(iii) Where any credit transferor has in its balance at the conclusion of any averaging period both credits which were properly created and credits which were improperly created, the properly created credits will be applied first to any credit transfers before the transferor may apply any credits to achieve its own compliance.

(i) *Average compliance for reformulated gasoline produced or imported before January 1, 1995.* In the case of any reformulated gasoline that is intended to be used beginning January 1, 1995, but that is produced or imported prior to that date:

(1) Any refiner or importer may meet standards specified in § 80.41 for average compliance for such gasoline, provided the refiner or importer has the option of meeting standards on average for 1995 under paragraph (a) of this section, and provided the refiner or importer elects to be subject to average standards under § 80.65(c)(3); and

(2) Any average compliance gasoline under paragraph (i)(1) of this section shall be combined with average compliance gasoline produced during 1995 for purposes of compliance calculations under paragraph (g) of this section.

[38 FR 1255, Jan. 10, 1973, as amended at 62 FR 60135, Nov. 6, 1997; 62 FR 68207, Dec. 31, 1997]

§ 80.68 Compliance surveys.

(a) *Compliance survey option 1.* In order to satisfy the compliance survey requirements, any refiner, importer, or oxygenate blender shall properly conduct a program of compliance surveys in accordance with a survey program plan which has been approved by the Administrator of EPA in each covered area which is supplied with any gasoline for which compliance is achieved on average that is produced by that refiner or oxygenate blender or imported by that importer. Such approval shall be based upon the survey program plan meeting the following criteria:

(1) The survey program shall consist of at least four surveys which shall

occur during the following time periods: one survey during the period January 1 through May 31; two surveys during the period June 1 through September 15; and one survey during the period September 16 through December 31.

(2) The survey program shall meet the criteria stated in paragraph (c) of this section.

(3) In the event that any refiner, importer, or oxygenate blender fails to properly carry out an approved survey program, the refiner, importer, or oxygenate blender shall achieve compliance with all applicable standards on a per-gallon basis for the calendar year in which the failure occurs, and may not achieve compliance with any standard on an average basis during this calendar year. This requirement to achieve compliance per-gallon shall apply *ab initio* to the beginning of any calendar year in which the failure occurs, regardless of when during the year the failure occurs.

(b) *Compliance survey option 2.* A refiner, importer, or oxygenate blender shall be deemed to have satisfied the compliance survey requirements described in paragraph (a) of this section if a comprehensive program of surveys is properly conducted in accordance with a survey program plan which has been approved by the Administrator of EPA. Such approval shall be based upon the survey program plan meeting the following criteria:

(1) The initial schedule for the conduct of surveys shall be as follows:

(i) 120 surveys shall be conducted in 1995;

(ii) 80 surveys shall be conducted in 1996;

(iii) 60 surveys shall be conducted in 1997;

(iv) 70 surveys shall be conducted in 1998 and thereafter.

(2) This initial survey schedule shall be adjusted as follows:

(i) In the event one or more ozone nonattainment areas in addition to the nine specified in § 80.70, opt into the reformulated gasoline program, the number of surveys to be conducted in the year the area or areas opt into the program and in each subsequent year shall be increased according to the following formula:

$$ANS_i = \left(\frac{V_{opt-in}}{V_{orig}} \times NS_i \right) + NS_i$$

where:

ANS_i = the adjusted number of surveys for year i; i = the opt-in year and each subsequent year

NS_i = the number of surveys according to the schedule in paragraph (b)(1) of this section in year i; i = the opt-in year and each subsequent year

V_{opt-in} = the total volume of gasoline supplied to the opt-in covered areas in the year preceding the year of the opt-in

V_{orig} = the total volume of gasoline supplied to the original nine covered areas in the year preceding the year of the opt-in

(ii) In the event that any covered area fails a survey or survey series according to the criteria set forth in paragraph (c) of this section, the annual decreases in the numbers of surveys prescribed by paragraph (b)(1) of this section, as adjusted by paragraph (b)(2)(i) of this section, shall be adjusted as follows in the year following the year of the failure. Any such adjustment to the number of surveys shall remain in effect so long as any standard for the affected covered area has been adjusted to be more stringent as a result of a failed survey or survey series. The adjustments shall be calculated according to the following formula:

$$ANS_i = \left(\frac{V_{failed}}{V_{total}} \times \left(NS_{i-1} - NS_i \right) \right) + NS_i$$

where:

ANS_i = the adjusted number of surveys in year i; i = the year after the failure and each subsequent year

V_{failed} = the total volume of gasoline supplied to the covered area which failed the survey or survey series in the year of the failure

V_{total} = the total volume of gasoline supplied to all covered areas in the year of the failure

NS_i = the number of surveys in year i according to the schedule in paragraph (b)(1) of this section and as adjusted by paragraph (b)(2)(i) of this section; i = the year after the failure and each subsequent year

(3) The survey program shall meet the criteria stated in paragraph (c) of this section.

(4) On each occasion the comprehensive survey program does not occur as specified in the approved plan with regard to any covered area:

(i) Each refiner, importer, and oxygenate blender who supplied any reformulated gasoline or RBOB to the covered area and who has not satisfied the survey requirements described in paragraph (a) of this section shall be deemed to have failed to carry out an approved survey program; and

(ii) The covered area will be deemed to have failed surveys for VOC and NO_X emissions performance, and survey series for benzene and oxygen, and toxic and NO_X emissions performance.

(c) *General survey requirements.* (1) During the period January 1, 1995 through December 31, 1997:

(i) Any sample taken from a retail gasoline storage tank for which the three most recent deliveries were of gasoline designated as meeting:

(A) Simple model standards shall be considered a ''simple model sample''; or

(B) Complex model standards shall be considered a ''complex model sample.''

(ii) A survey shall consist of the combination of a simple model portion and a complex model portion, as follows:

(A) The simple model portion of a survey shall consist of all simple model samples that are collected pursuant to the applicable survey design in a single covered area during any consecutive seven-day period and that are not excluded under paragraph (c)(6) of this section.

(B) The complex model portion of a survey shall consist of all complex model samples that are collected pursuant to the applicable survey design in a single covered area during any consecutive seven-day period and that are not excluded under paragraph (c)(6) of this section.

(iii)(A) The simple model portion of each survey shall be representative of all gasoline certified using the simple model which is being dispensed in the covered area.

(B) The complex model portion of each survey shall be representative of all gasoline certified using the complex model which is being dispensed in the covered area.

(2) Beginning on January 1, 1998:

(i) A survey shall consist of all samples that are collected pursuant to the applicable survey design in a single covered area during any consecutive seven-day period and that are not excluded under paragraph (c)(6) of this section.

(ii) A survey shall be representative of all gasoline which is being dispensed in the covered area.

(3) A VOC survey and a NO_X survey shall consist of any survey conducted during the period June 1 through September 15.

(4)(i) A toxics, oxygen, and benzene survey series shall consist of all surveys conducted in a single covered area during a single calendar year.

(ii) A NO_X survey series shall consist of all surveys conducted in a single covered area during the periods January 1 through May 31, and September 16 through December 31 during a single calendar year.

(5)(i) Each simple model sample included in a survey shall be analyzed for oxygenate type and content, benzene content, aromatic hydrocarbon content, and RVP in accordance with the methodologies specified in § 80.46; and

(ii) Each complex model sample included in a survey shall be analyzed for oxygenate type and content, olefins, benzene, sulfur, and aromatic hydrocarbons, E–200, E–300, and RVP in accordance with the methodologies specified in § 80.46.

(6)(i) The results of each survey shall be based upon the results of the analysis of each sample collected during the course of the survey, unless the

sample violates the applicable per-gallon maximum or minimum standards for the parameter being evaluated plus any enforcement tolerance that applies to the parameter (*e.g.*, a sample that violates the benzene per-gallon maximum plus any benzene enforcement tolerance but meets other per-gallon maximum and minimum standards would be excluded from the benzene survey, but would be included in the surveys for parameters other than benzene).

(ii) Any sample from a survey that violates any standard under § 80.41, or that constitutes evidence of the violation of any prohibition or requirement under this subpart D, may be used by the Administrator in an enforcement action for such violation.

(7) Each laboratory at which samples in a survey are analyzed shall participate in a correlation program with EPA to ensure the validity of analysis results.

(8)(i) The results of each simple model VOC survey shall be determined as follows:

(A) For each simple model sample from the survey, the VOC emissions reduction percentage shall be determined based upon the tested values for RVP and oxygen for that sample as applied to the VOC emissions reduction equation at § 80.42(a)(1) for VOC-Control Region 1 and § 80.42(a)(2) for VOC-Control Region 2;

(B) The VOC emissions reduction survey standard applicable to each covered area shall be calculated by using the VOC emissions equation at § 80.42(a)(1) with RVP = 7.2 and OXCON = 2.0 for covered areas located in VOC-Control Region 1 and using the VOC emissions equation at § 80.42(a)(2) with RVP = 8.1 and OXCON = 2.0 for covered areas located in VOC-Control Region 2; and

(C) The covered area shall have failed the simple model VOC survey if the VOC emissions reduction average of all survey samples is less than VOC emissions reduction survey standard calculated under paragraph (c)(8)(i)(B) of this section.

(ii) The results of each complex model VOC emissions reduction survey shall be determined as follows:

(A) For each complex model sample from the survey series, the VOC emissions reduction percentage shall be determined based upon the tested parameter values for that sample and the appropriate methodology for calculating VOC emissions reduction at § 80.45;

(B) The covered area shall have failed the complex model VOC survey if the VOC emissions reduction percentage average of all survey samples is less than the applicable per-gallon standard for VOC emissions reduction.

(9)(i) The results of each simple model toxics emissions reduction survey series conducted in any covered area shall be determined as follows:

(A) For each simple model sample from the survey series, the toxics emissions reduction percentage shall be determined based upon the tested parameter values for that sample and the appropriate methodology for calculating toxics emissions performance reduction at § 80.42.

(B) The annual average of the toxics emissions reduction percentages for all samples from a survey series shall be calculated according to the following formula:

$$AATER = \left(\left(\frac{\sum_{i=1}^{n_1} TER_{1,i}}{n_1} \right) \times 0.468 \right) + \left(\left(\frac{\sum_{i=1}^{n_2} TER_{2,i}}{n_2} \right) \times 0.532 \right)$$

where

AATER = the annual average toxics emissions reduction

$TER_{1,i}$ = the toxics emissions reduction for sample i of gasoline collected during the high ozone season

$TER_{2,i}$ = the toxics emissions reduction for sample i of gasoline collected outside the high ozone season
n_1 = the number of samples collected during the high ozone season
n_2 = the number of samples collected outside the high ozone season

(C) The covered area shall have failed the simple model toxics survey series if the annual average toxics emissions reduction is less than the simple model per-gallon standard for toxics emissions reduction.

(ii) The results of each complex model toxics emissions reduction survey series conducted in any covered area shall be determined as follows:

(A) For each complex model sample from the survey series, the toxics emissions reduction percentage shall be determined based upon the tested parameter values for that sample and the appropriate methodology for calculating toxics emissions reduction at § 80.45;

(B) The annual average of the toxics emissions reduction percentages for all samples from a survey series shall be calculated according to the formula specified in paragraph (c)(9)(i)(B) of this section; and

(C) The covered area shall have failed the complex model toxics survey series if the annual average toxics emissions reduction is less than the applicable per-gallon complex model standard for toxics emissions reduction.

(10) The results of each NO_X emissions reduction survey and survey series shall be determined as follows:

(i) For each sample from the survey and survey series, the NO_X emissions reduction percentage shall be determined based upon the tested parameter values for that sample and the appropriate methodology for calculating NO_X emissions reduction at § 80.45; and

(ii) The covered area shall have failed the NO_X survey or survey series if the NO_X emissions reduction percentage average for all survey samples is less than the applicable Phase I or Phase II complex model per-gallon standard for NO_X emissions reduction.

(11) For any benzene content survey series conducted in any covered area the average benzene content for all samples from the survey series shall be calculated. If this annual average is greater than 1.000 percent by volume, the covered area shall have failed a benzene survey series.

(12) For any oxygen content survey series conducted in any covered area the average oxygen content for all samples from the survey series shall be calculated. If this annual average is less than 2.00 percent by weight, the covered area shall have failed an oxygen survey series.

(13) Each survey program shall:

(i) Be planned and conducted by a person who is independent of the refiner or importer (the surveyor). In order to be considered independent:

(A) The surveyor shall not be an employee of any refiner or importer;

(B) The surveyor shall be free from any obligation to or interest in any refiner or importer; and

(C) The refiner or importer shall be free from any obligation to or interest in the surveyor; and

(ii) Include procedures for selecting sample collection locations, numbers of samples, and gasoline compositions which will result in:

(A) Simple model surveys representing all gasoline certified using the simple model being dispensed at retail outlets within the covered area during the period of the survey; and

(B) Complex model surveys representing all gasoline certified using the complex model being dispensed at retail outlets within the covered area during the period of the survey; and

(iii) Include procedures such that the number of samples included in each survey assures that:

(A) In the case of simple model surveys, the average levels of oxygen, benzene, RVP, and aromatic hydrocarbons are determined with a 95% confidence level, with error of less than 0.1 psi for RVP, 0.05% for benzene (by volume), and 0.1% for oxygen (by weight); and

(B) In the case of complex model surveys, the average levels of oxygen, benzene, RVP, aromatic hydrocarbons, olefins, T–50, T–90 and sulfur are determined with a 95% confidence level, with error of less than 0.1 psi for RVP, 0.05% for benzene (by volume), 0.1% for oxygen (by weight), 0.5% for olefins (by volume), 5 °F. for T–50 and T–90, and 10 ppm for sulfur; or an equivalent level of precision for the complex model-determined emissions parameters; and

(iv) Require that the surveyor shall:

(A) Not inform anyone, in advance, of the date or location for the conduct of any survey;

(B) Upon request by EPA made within thirty days following the submission of the report of a survey, provide a duplicate of any gasoline sample taken during that survey to EPA at a location to be specified by EPA each sample to be identified by the name and address of the facility where collected, the date of collection, and the classification of the sample as simple model or complex model; and

(C) At any time permit any representative of EPA to monitor the conduct of the survey, including sample collection, transportation, storage, and analysis; and

(v) Require the surveyor to submit to EPA a report of each survey, within thirty days following completion of the survey, such report to include the following information:

(A) The identification of the person who conducted the survey;

(B) An attestation by an officer of the surveyor company that the survey was conducted in accordance with the survey plan and that the survey results are accurate;

(C) If the survey was conducted for one refiner or importer, the identification of that party;

(D) The identification of the covered area surveyed;

(E) The dates on which the survey was conducted;

(F) The address of each facility at which a gasoline sample was collected, the date of collection, and the classification of the sample as simple model or complex model;

(G) The results of the analyses of simple model samples for oxygenate type and oxygen weight percent, benzene content, aromatic hydrocarbon content, and RVP, the calculated toxics emission reduction percentage, and for each survey conducted during the period June 1 through September 15 the VOC emissions reduction percentage calculated using the methodology specified in paragraph (c)(8)(i) of this section;

(H) The results of the analyses of complex model samples for oxygenate type and oxygen weight percent, benzene, aromatic hydrocarbon, and olefin content, E–200, E–300, and RVP, the calculated NO_X and toxics emissions reduction percentage, and for each survey conducted during the period June 1 through September 15, the calculated VOC emissions reduction percentage;

(I) The name and address of each laboratory where gasoline samples were analyzed;

(J) A description of the methodology utilized to select the locations for sample collection and the numbers of samples collected;

(K) For any samples which were excluded from the survey, a justification for such exclusion; and

(L) The average toxics emissions reduction percentage for simple model samples and the percentage for complex model samples, the average benzene and oxygen percentages, and for each survey conducted during the period June 1 through September 15, the average VOC emissions reduction percentage for simple model samples and the percentage for complex model samples, and the average NO_X emissions reduction percentage for all complex model samples;

(14) Each survey shall be conducted at a time and in a covered area selected by EPA no earlier than two weeks before the date of the survey.

(15) The procedure for seeking EPA approval for a survey program plan shall be as follows:

(i) The survey program plan shall be submitted to the Administrator of EPA for EPA's approval no later than September 1 of the year preceding the year in which the surveys will be conducted; and

(ii) Such submittal shall be signed by a responsible corporate officer of the refiner, importer, or oxygenate blender, or in the case of a comprehensive survey program plan, by an officer of the organization coordinating the survey program.

(16)(i) No later than December 1 of the year preceding the year in which the surveys will be conducted, the contract with the surveyor to carry out the entire survey plan shall be in effect, and an amount of money necessary to carry out the entire survey plan shall be paid to the surveyor or

placed into an escrow account with instructions to the escrow agent to pay the money over to the surveyor during the course of the conduct of the survey plan.

(ii) No later than December 15 of the year preceding the year in which the surveys will be conducted, the Administrator of EPA shall be given a copy of the contract with the surveyor, proof that the money necessary to carry out the plan has either been paid to the surveyor or placed into an escrow account, and if placed into an escrow account, a copy of the escrow agreement.

[59 FR 7813, Feb. 16, 1994, as amended at 59 FR 36963, July 20, 1994; 62 FR 12576, Mar. 17, 1997; 62 FR 68207, Dec. 31, 1997]

§ 80.69 Requirements for downstream oxygenate blending.

The requirements of this section apply to all reformulated gasoline blendstock for oxygenate blending, or RBOB, to which oxygenate is added at any oxygenate blending facility.

(a) *Requirements for refiners and importers.* For any RBOB produced or imported, the refiner or importer of the RBOB shall:

(1) Produce or import the RBOB such that, when blended with a specified type and percentage of oxygenate, it meets the applicable standards for reformulated gasoline;

(2) In order to determine the properties of RBOB for purposes of calculating compliance with per-gallon or averaged standards, conduct tests on each batch of the RBOB by:

(i) Adding the specified type and amount of oxygenate to a representative sample of the RBOB; and

(ii) Determining the properties and characteristics of the resulting gasoline using the methodology specified in § 80.65(e);

(3) Carry out the independent analysis requirements specified in § 80.65(f);

(4) Determine properties of the RBOB which are sufficient to allow parties downstream from the refinery or import facility to establish, through sampling and testing, if the RBOB has been altered or contaminated such that it will not meet the applicable reformulated gasoline standards subsequent to the addition of the specified type and amount of oxygenate;

(5) Transfer ownership of the RBOB only to an oxygenate blender who is registered with EPA as such, or to an intermediate owner with the restriction that it only be transferred to a registered oxygenate blender;

(6) Have a contract with each oxygenate blender who receives any RBOB produced or imported by the refiner or importer that requires the oxygenate blender, or, in the case of a contract with an intermediate owner, that requires the intermediate owner to require the oxygenate blender to:

(i) Comply with blender procedures that are specified by the contract and are calculated to assure blending with the proper type and amount of oxygenate;

(ii) Allow the refiner or importer to conduct quality assurance sampling and testing of the reformulated gasoline produced by the oxygenate blender;

(iii) Stop selling any gasoline found to not comply with the standards under which the RBOB was produced or imported; and

(iv) Carry out the quality assurance sampling and testing that this section requires the oxygenate blender to conduct;

(7) Conduct a quality assurance sampling and testing program to be carried out at the facilities of each oxygenate blender who blends any RBOB produced or imported by the refiner or importer with any oxygenate, to determine whether the reformulated gasoline which has been produced through blending complies with the applicable standards, using the methodology specified in § 80.46 for this determination.

(i) The sampling and testing program shall be conducted as follows:

(A) All samples shall be collected subsequent to the addition of oxygenate, and either:

(*1*) Prior combining the resulting gasoline with any other gasoline; or

(*2*) In the case of truck splash blending, subsequent to the delivery of the gasoline to a retail outlet or wholesale purchaser-consumer facility provided that the three most recent deliveries to the retail outlet or wholesale purchaser facility were of gasoline produced using that refiner's or importer's

RBOB, and provided that any discrepancy found through the retail outlet or wholesale purchaser facility sampling is followed-up with measures reasonably designed to discover the cause of the discrepancy; and

(B) Sampling and testing shall be at one of the following rates:

(*1*) In the case of RBOB which is blended with oxygenate in a gasoline storage tank, a rate of not less than one sample for every 400,000 barrels of RBOB produced or imported by that refiner or importer that is blended by that blender, or one sample every month, whichever is more frequent; or

(*2*) In the case of RBOB which is blended with oxygenate in gasoline delivery trucks through the use of computer-controlled in-line blending equipment, a rate of not less than one sample for every 200,000 barrels of RBOB produced or imported by that refiner or importer that is blended by that blender, or one sample every three months, whichever is more frequent; or

(*3*) In the case of RBOB which is blended with oxygenate in gasoline delivery trucks without the use of computer-controlled in-line blending equipment, a rate of not less than one sample for each 50,000 barrels of RBOB produced or imported by that refiner or importer which is blended, or one sample per month, whichever is more frequent;

(ii) In the event the test results for any sample indicate the gasoline does not comply with applicable standards (within the correlation ranges specified in § 80.65(e)(2)(i)), the refiner or importer shall:

(A) Immediately take steps to stop the sale of the gasoline that was sampled;

(B) Take steps which are reasonably calculated to determine the cause of the noncompliance and to prevent future instances of noncompliance;

(C) Increase the rate of sampling and testing to one of the following rates:

(*1*) In the case of RBOB which is blended with oxygenate in a gasoline storage tank, a rate of not less than one sample for every 200,000 barrels of RBOB produced or imported by that refiner or importer that is blended by that blender, or one sample every two weeks, whichever is more frequent; or

(*2*) In the case of RBOB which is blended with oxygenate in gasoline delivery trucks through the use of computer-controlled in-line blending equipment, a rate of not less than one sample for every 100,000 barrels of RBOB produced or imported by that refiner or importer that is blended by that blender, or one sample every two months, whichever is more frequent; or

(*3*) In the case of RBOB which is blended with oxygenate in gasoline delivery trucks without the use of computer-controlled in-line blending equipment, a rate of not less than one sample for each 25,000 barrels of RBOB produced or imported by that refiner or importer which is blended, or one sample every two weeks, whichever is more frequent;

(D) Continue the increased frequency of sampling and testing until the results of ten consecutive samples and tests indicate the gasoline complies with applicable standards, at which time the sampling and testing may be conducted at the original frequency;

(iii) This quality assurance program is in addition to any quality assurance requirements carried out by other parties;

(8) A refiner or importer of RBOB may, in lieu of the contractual and quality assurance requirements specified in paragraphs (a) (6) and (7) of this section, base its compliance calculations on the following assumptions:

(i) In the case of RBOB designated for any-oxygenate, assume that ethanol will be added;

(ii) In the case of RBOB designated for ether-only, assume that MTBE will be added; and

(iii) In the case of any-oxygenate and ether-only designated RBOB, assume that the volume of oxygenate added will be such that the resulting reformulated gasoline will have an oxygen content of 2.0 weight percent;

(9) Any refiner or importer who does not meet the contractual and quality assurance requirements specified in paragraphs (a) (6) and (7) of this section, and who does not designate its RBOB as ether-only or any-oxygenate, shall base its compliance calculations on the assumption that 4.0 volume percent ethanol is added to the RBOB; and

(10) Specify in the product transfer documentation for the RBOB each oxygenate type or types and amount or range of amounts which is consistent with the designation of the RBOB as any-oxygenate, or ether-only, and which, if blended with the RBOB will result in reformulated gasoline which:

(i) Has VOC, toxics, or NO_X emissions reduction percentages which are no lower than the percentages that formed the basis for the refiner's or importer's compliance determination for these parameters;

(ii) Has a benzene content and RVP level which are no higher than the values for these characteristics that formed the basis for the refiner's or importer's compliance determinations for these parameters; and

(iii) Will not cause the reformulated gasoline to violate any standard specified in § 80.41.

(b) *Requirements for oxygenate blenders.* For all RBOB received by any oxygenate blender, the oxygenate blender shall:

(1) Add oxygenate of the type(s) and amount (or within the range of amounts) specified in the product transfer documents for the RBOB;

(2) Designate each batch of the resulting reformulated gasoline as meeting the oxygen standard per-gallon or on average;

(3) Meet the standard requirements specified in § 80.65(c) and § 80.67(f), the record keeping requirements specified in § 80.74, and the reporting requirements specified in § 80.75; and

(4) In the case of each batch of reformulated gasoline which is designated for compliance with the oxygen standard on average:

(i) Determine the volume and the weight percent oxygen of the batch using the testing methodology specified in § 80.46;

(ii) Assign a number to the batch (the ''batch number''), beginning with the number one for the first batch produced each calendar year and each subsequent batch during the calendar year being assigned the next sequential number, and such numbers to be preceded by the oxygenate blender's registration number, the facility number, and the second two digits of the year in which the batch was produced (e.g., 4321–4321–95–001, 4321–4321–95–002, etc.); and

(iii) Meet the compliance audit requirements specified in § 80.65(h).

(c) *Additional requirements for terminal storage tank blending.* Any oxygenate blender who produces reformulated gasoline by blending any oxygenate with any RBOB in any gasoline storage tank, other than a truck used for delivering gasoline to retail outlets or wholesale purchaser-consumer facilities, shall, for each batch of reformulated gasoline so produced determine the oxygen content and volume of this gasoline prior to the gasoline leaving the oxygenate blending facility, using the methodology specified in § 80.46.

(d) *Additional requirements for distributors dispensing RBOB into trucks for blending.* Any distributor who dispenses any RBOB into any truck which delivers gasoline to retail outlets or wholesale purchaser-consumer facilities, shall for such RBOB so dispensed:

(1) Transfer the RBOB only to an oxygenate blender who has registered with the Administrator of EPA as such;

(2) Transfer any RBOB designated as ether-only RBOB only if the distributor has a reasonable basis for knowing the oxygenate blender will blend an oxygenate other than ethanol with the RBOB; and

(3) Obtain from the oxygenate blender the oxygenate blender's EPA registration number.

(e) *Additional requirements for oxygenate blenders who blend oxygenate in trucks.* Any oxygenate blender who obtains any RBOB in any gasoline delivery truck shall:

(1) On each occasion it obtains RBOB from a distributor, supply the distributor with the oxygenate blender's EPA registration number;

(2) Conduct a quality assurance sampling and testing program to determine whether the proper type and amount of oxygenate is added to RBOB. The program shall be conducted as follows:

(i) All samples shall be collected subsequent to the addition of oxygenate, and either:

(A) Prior combining the resulting gasoline with any other gasoline; or

(B) Subsequent to the delivery of the gasoline to a retail outlet or wholesale purchaser-consumer facility provided

that the three most recent deliveries to the retail outlet or wholesale purchaser facility were of gasoline that was produced by that oxygenate blender and that had the same oxygenate requirements, and provided that any discrepancy in oxygenate type or amount found through the retail outlet or wholesale purchaser facility sampling is followed-up with measures reasonably designed to discover the cause of the discrepancy;

(ii) Sampling and testing shall be at one of the following rates:

(A) In the case computer-controlled in-line blending is used, a rate of not less than one sample per each five hundred occasions RBOB and oxygenate are loaded into a truck by that oxygenate blender, or one sample every three months, whichever is more frequent; or

(B) In the case computer-controlled in-line blending is not used, a rate of not less than one sample per each one hundred occasions RBOB and oxygenate are blended in a truck by that oxygenate blender, or one sample per month, whichever is more frequent;

(iii) Sampling and testing shall be of the gasoline produced through one of the RBOB-oxygenate blends produced by that oxygenate blender;

(iv) Samples shall be analyzed for oxygenate type and oxygen content using the testing methodology specified at § 80.46; and

(v) In the event the testing results for any sample indicate the gasoline does not contain the specified type and amount of oxygenate (within the ranges specified in § 80.70(b)(2)(i)):

(A) Immediately stop selling (or where possible, to stop any transferee of the gasoline from selling) the gasoline which was sampled;

(B) Take steps to determine the cause of the noncompliance;

(C) Increase the rate of sampling and testing to one of the following rates:

(*1*) In the case computer-controlled in-line blending is used, a rate of not less than one sample per each two hundred and fifty occasions RBOB and oxygenate are loaded into a truck by that oxygenate blender, or one sample every six weeks, whichever is more frequent; or

(*2*) In the case computer-controlled in-line blending is not used, a rate of not less than one sample per each fifty occasions RBOB and oxygenate are blended in a truck by that oxygenate blender, or one sample every two weeks, whichever is more frequent; and

(D) This increased frequency shall continue until the results of ten consecutive samples and tests indicate the gasoline complies with applicable standards, at which time the frequency may revert to the original frequency.

[59 FR 7813, Feb. 16, 1994, as amended at 59 FR 36964, July 20, 1994; 62 FR 60135, Nov. 6, 1997]

§ 80.70 Covered areas.

For purposes of subparts D, E, and F of this part, the covered areas are as follows:

(a) The Los Angeles-Anaheim-Riverside, California, area, comprised of:

(1) Los Angeles County;

(2) Orange County;

(3) Ventura County;

(4) That portion of San Bernadino County that lies south of latitude 35 degrees, 10 minutes north and west of longitude 115 degrees, 45 minutes west; and

(5) That portion of Riverside County, which lies to the west of a line described as follows:

(i) Beginning at the northeast corner of Section 4, Township 2 South, Range 5 East, a point on the boundary line common to Riverside and San Bernadino Counties;

(ii) Then southerly along section lines to the centerline of the Colorado River Aqueduct;

(iii) Then southeasterly along the centerline of said Colorado River Aqueduct to the southerly line of Section 36, Township 3 South, Range 7 East;

(iv) Then easterly along the township line to the northeast corner of Section 6, Township 4 South, Range 9 East;

(v) Then southerly along the easterly line of Section 6 to the southeast corner thereof;

(vi) Then easterly along section lines to the northeast corner of Section 10, Township 4 South, Range 9 East;

(vii) Then southerly along section lines to the southeast corner of Section 15, Township 4 South, Range 9 East;

(viii) Then easterly along the section lines to the northeast corner of Section 21, Township 4 South, Range 10 East;

(ix) Then southerly along the easterly line of Section 21 to the southeast corner thereof;

(x) Then easterly along the northerly line of Section 27 to the northeast corner thereof;

(xi) Then southerly along section lines to the southeast corner of Section 34, Township 4 South, Range 10 East;

(xii) Then easterly along the township line to the northeast corner of Section 2, Township 5 South, Range 10 East;

(xiii) Then southerly along the easterly line of Section 2, to the southeast corner thereof;

(xiv) Then easterly along the northerly line of Section 12 to the northeast corner thereof;

(xv) Then southerly along the range line to the southwest corner of Section 18, Township 5 South, Range 11 East;

(xvi) Then easterly along section lines to the northeast corner of Section 24, Township 5 South, Range 11 East; and

(xvii) Then southerly along the range line to the southeast corner of Section 36, Township 8 South, Range 11 East, a point on the boundary line common to Riverside and San Diego Counties.

(b) San Diego County, California.

(c) The Greater Connecticut area, comprised of:

(1) The following Connecticut counties:

(i) Hartford;

(ii) Middlesex;

(iii) New Haven;

(iv) New London;

(v) Tolland;

(vi) Windham; and

(2) Portions of certain Connecticut counties, described as follows:

(i) In Fairfield County, the City of Shelton; and

(ii) In Litchfield County, all cities and townships except the towns of Bridgewater and New Milford.

(d) The New York-Northern New Jersey-Long Island-Connecticut area, comprised of:

(1) Portions of certain Connecticut counties, described as follows:

(i) In Fairfield County, all cities and townships except Shelton City;

(ii) In Litchfield County, the towns of Bridgewater and New Milford;

(2) The following New Jersey counties:

(i) Bergen;

(ii) Essex;

(iii) Hudson;

(iv) Hunterdon;

(v) Middlesex;

(vi) Monmouth;

(vii) Morris;

(viii) Ocean;

(ix) Passaic;

(x) Somerset;

(xi) Sussex;

(xii) Union; and

(3) The following New York counties:

(i) Bronx;

(ii) Kings;

(iii) Nassau;

(iv) New York (Manhattan);

(v) Queens;

(vi) Richmond;

(vii) Rockland;

(viii) Suffolk;

(ix) Westchester;

(x) Orange; and

(xi) Putnam.

(e) The Philadelphia-Wilmington-Trenton area, comprised of:

(1) The following Delaware counties:

(i) New Castle; and

(ii) Kent;

(2) Cecil County, Maryland;

(3) The following New Jersey counties:

(i) Burlington;

(ii) Camden;

(iii) Cumberland;

(iv) Gloucester;

(v) Mercer;

(vi) Salem; and

(4) The following Pennsylvania counties:

(i) Bucks;

(ii) Chester;

(iii) Delaware;

(iv) Montgomery; and

(v) Philadelphia.

(f) The Chicago-Gary-Lake County, Illinois-Indiana-Wisconsin area, comprised of:

(1) The following Illinois counties:

(i) Cook;

(ii) Du Page;

(iii) Kane;

(iv) Lake;

(v) McHenry;

(vi) Will;

(2) Portions of certain Illinois counties, described as follows:

(i) In Grundy County, the townships of Aux Sable and Goose Lake; and

(ii) In Kendall County, Oswego township; and

(3) The following Indiana counties:

(i) Lake; and

(ii) Porter.

(g) The Baltimore, Maryland area, comprised of:

(1) The following Maryland counties:

(i) Anne Arundel;

(ii) Baltimore;

(iii) Carroll;

(iv) Harford;

(v) Howard; and

(2) The City of Baltimore.

(h) The Houston-Galveston-Brazoria, Texas area, comprised of the following Texas counties:

(1) Brazoria;

(2) Fort Bend;

(3) Galveston;

(4) Harris;

(5) Liberty;

(6) Montgomery;

(7) Waller; and

(8) Chambers.

(i) The Milwaukee-Racine, Wisconsin area, comprised of the following Wisconsin counties:

(1) Kenosha;

(2) Milwaukee;

(3) Ozaukee;

(4) Racine;

(5) Washington; and

(6) Waukesha.

(j) The ozone nonattainment areas listed in this paragraph (j) are covered areas for purposes of subparts D, E, and F of this part. The geographic extent of each covered area listed in this paragraph (j) shall be the nonattainment area boundaries as specified in 40 CFR part 81, subpart C:

(1) Sussex County, Delaware;

(2) District of Columbia portion of the Washington ozone nonattainment area;

(3) The following Kentucky counties:

(i) Boone;

(ii) Campbell;

(iii) Jefferson; and

(iv) Kenton;

(4) Portions of the following Kentucky counties:

(i) Portion of Bullitt County described as follows:

(A) Beginning at the intersection of Ky 1020 and the Jefferson-Bullitt County Line proceeding to the east along the county line to the intersection of county road 567 and the Jefferson-Bullitt County Line;

(B) Proceeding south on county road 567 to the junction with Ky 1116 (also known as Zoneton Road);

(C) Proceeding to the south on KY 1116 to the junction with Hebron Lane;

(D) Proceeding to the south on Hebron Lane to Cedar Creek;

(E) Proceeding south on Cedar Creek to the confluence of Floyds Fork turning southeast along a creek that meets Ky 44 at Stallings Cemetery;

(F) Proceeding west along Ky 44 to the eastern most point in the Shepherdsville city limits;

(G) Proceeding south along the Shepherdsville city limits to the Salt River and west to a point across the river from Mooney Lane;

(H) Proceeding south along Mooney Lane to the junction of Ky 480;

(I) Proceeding west on Ky 480 to the junction with Ky 2237;

(J) Proceeding south on Ky 2237 to the junction with Ky 61 and proceeding north on Ky 61 to the junction with Ky 1494;

(K) Proceeding south on Ky 1494 to the junction with the perimeter of the Fort Knox Military Reservation;

(L) Proceeding north along the military reservation perimeter to Castleman Branch Road;

(M) Proceeding north on Castleman Branch Road to Ky 44;

(N) Proceeding a very short distance west on Ky 44 to a junction with Ky 1020; and

(O) Proceeding north on Ky 1020 to the beginning.

(ii) Portion of Oldham County described as follows:

(A) Beginning at the intersection of the Oldham-Jefferson County Line with the southbound lane of Interstate 71;

(B) Proceeding to the northeast along the southbound lane of Interstate 71 to the intersection of Ky 329 and the southbound lane of Interstate 71;

(C) Proceeding to the northwest on Ky 329 to the intersection of Zaring Road on Ky 329;

(D) Proceeding to the east-northeast on Zaring Road to the junction of Cedar Point Road and Zaring Road;

(E) Proceeding to the north-northeast on Cedar Point Road to the junction of Ky 393 and Cedar Point Road;

(F) Proceeding to the south-southeast on Ky 393 to the junction of county road 746 (the road on the north side of Reformatory Lake and the Reformatory);

(G) Proceeding to the east-northeast on county road 746 to the junction with Dawkins Lane (also known as Saddlers Mill Road) and county road 746;

(H) Proceeding to follow an electric power line east-northeast across from the junction of county road 746 and Dawkins Lane to the east-northeast across Ky 53 on to the La Grange Water Filtration Plant;

(I) Proceeding on to the east-southeast along the power line then south across Fort Pickens Road to a power substation on Ky 146;

(J) Proceeding along the power line south across Ky 146 and the Seaboard System Railroad track to adjoin the incorporated city limits of La Grange;

(K) Then proceeding east then south along the La Grange city limits to a point abutting the north side of Ky 712;

(L) Proceeding east-southeast on Ky 712 to the junction of Massie School Road and Ky 712;

(M) Proceeding to the south-southwest and then north-northwest on Massie School Road to the junction of Ky 53 and Massie School Road;

(N) Proceeding on Ky 53 to the north-northwest to the junction of Moody Lane and Ky 53;

(O) Proceeding on Moody Lane to the south-southwest until meeting the city limits of La Grange;

(P) Then briefly proceeding north following the La Grange city limits to the intersection of the northbound lane of Interstate 71 and the La Grange city limits;

(Q) Proceeding southwest on the northbound lane of Interstate 71 until intersecting with the North Fork of Currys Fork;

(R) Proceeding south-southwest beyond the confluence of Currys Fork to the south-southwest beyond the confluence of Floyds Fork continuing on to the Oldham-Jefferson County Line; and

(S) Proceeding northwest along the Oldham-Jefferson County Line to the beginning.

(5) The following Maine counties:

(i) Androscoggin;

(ii) Cumberland;

(iii) Kennebec;

(iv) Knox;

(v) Lincoln;

(vi) Sagadahoc;

(vii) York;

(6) The following Maryland counties:

(i) Calvert;

(ii) Charles;

(iii) Frederick;

(iv) Montgomery;

(v) Prince Georges;

(vi) Queen Anne's; and

(vii) Kent;

(7) The entire State of Massachusetts;

(8) The following New Hampshire counties:

(i) Strafford;

(ii) Merrimack;

(iii) Hillsborough; and

(iv) Rockingham;

(9) The following New Jersey counties:

(i) Atlantic;

(ii) Cape May; and

(iii) Warren;

(10) The following New York counties:

(i) Dutchess;

(ii) The portion of Essex County that consists of the portion of Whiteface Mountain above 4,500 feet in elevation.

(11) The entire State of Rhode Island;

(12) The following Texas counties: and

(i) Collin;

(ii) Dallas;

(iii) Denton; and

(iv) Tarrant;

(13) The following Virginia areas:

(i) Alexandria;

(ii) Arlington County;

(iii) Fairfax;

(iv) Fairfax County;

(v) Falls Church;

(vi) Loudoun County;

(vii) Manassas;

(viii) Manassas Park;

(ix) Prince William County;

(x) Stafford County;

(xi) Charles City County;

(xii) Chesterfield County;

(xiii) Colonial Heights;

(xiv) Hanover County;
(xv) Henrico County;
(xvi) Hopewell;
(xvii) Richmond;
(xviii) Chesapeake;
(xix) Hampton;
(xx) James City County;
(xxi) Newport News;
(xxii) Norfolk;
(xxiii) Poquoson;
(xxiv) Portsmouth;
(xxv) Suffolk;
(xxvi) Virginia Beach;
(xxvii) Williamsburg; and
(xxviii) York County.

(k) Any other area currently or previously designated as a nonattainment area for ozone under 40 CFR 50.9 and part D of Title I of the Clean Air Act, as of November 15, 1990, or any time later, may be included on petition of the governor of the state in which the area is located. Effective one year after an area has been reclassified as a severe ozone nonattainment area, such severe area shall also be a covered area for purposes of this subpart D.

(l) Upon the effective date for removal under § 80.72(a), the geographic area covered by such approval shall no longer be considered a covered area for purposes of subparts D, E and F of this part.

(m) The prohibitions of section 211(k)(5) will apply to all persons other than retailers and wholesale purchaser-consumers July 3, 1997. The prohibitions of section 211(k)(5) will apply to retailers and wholesale purchaser-consumers August 4, 1997. As of the effective date for retailers and wholesale purchaser-consumers, the Phoenix, Arizona ozone nonattainment area is a covered area. The geographical extent of the covered area listed in this paragraph shall be the nonattainment boundaries for the Phoenix ozone nonattainment area as specified in 40 CFR 81.303. The Phoenix, Arizona ozone nonattainment area is a covered area until June 10, 1998. As of June 10, 1998, the Phoenix area will no longer be a covered area.

(n) The prohibitions of section 211(k)(5) of the act will apply to all persons other than retailers and wholesale purchaser-consumers on May 1, 1999. The prohibitions of section 211(k)(5) of the act will apply to retailers and wholesale purchaser-consumers on June 1, 1999. As of the effective date for retailers and wholesale purchaser-consumers, the St. Louis, Missouri ozone nonattainment area is a covered area. The geographical extent of the covered area listed in this paragraph shall be the nonattainment boundaries for the St. Louis ozone nonattainment area as specified in 40 CFR 81.326.

[59 FR 7813, Feb. 16, 1994, as amended at 59 FR 36964, July 20, 1994; 60 FR 2699, Jan 11, 1995; 60 FR 35491, July 10, 1995; 61 FR 35680, July 8, 1996; 62 FR 30270, June 3, 1997; 63 FR 43049, Aug. 11, 1998; 63 FR 52104, Sept. 29, 1998; 64 FR 10371, Mar. 3, 1999]

§ 80.71 Descriptions of VOC-control regions.

(a) Reformulated gasoline covered areas which are located in the following States are included in VOC-Control Region 1:

Alabama	Missouri
Arizona	Nevada
Arkansas	New Mexico
California	North Carolina
Colorado	Oklahoma
District of Columbia	Oregon
Florida	South Carolina
Georgia	Tennessee
Kansas	Texas
Louisiana	Utah
Maryland	Virginia
Mississippi	

(b) Reformulated gasoline covered areas which are located in the following States are included in VOC-Control Region 2:

Connecticut	New Hampshire
Delaware	New Jersey
Idaho	New York
Illinois	North Dakota
Indiana	Ohio
Iowa	Pennsylvania
Kentucky	Rhode Island
Maine	South Dakota
Massachusetts	Vermont
Michigan	Washington
Minnesota	West Virginia
Montana	Wisconsin
Nebraska	Wyoming

(c) Reformulated gasoline covered areas which are partially in VOC Control Region 1 and partially in VOC Control Region 2 shall be included in VOC Control Region 1, except in the case of the Philadelphia-Wilmington-Trenton CMSA which shall be included in VOC Control Region 2.

§ 80.72 Procedures for opting out of the covered areas.

(a) In accordance with paragraph (b) of this section, the Administrator may approve a petition from a state asking for removal of any opt-in area, or portion of an opt-in area, from inclusion as a covered area under § 80.70. If the Administrator approves a petition, he or she shall set an effective date as provided in paragraph (c) of this section. The Administrator shall notify the state in writing of the Agency's action on the petition and the effective date of the removal when the petition is approved.

(b) To be approved under paragraph (a) of this section, a petition must be signed by the Governor of a State, or his or her authorized representative, and must include the following:

(1) A geographic description of each opt-in area, or portion of each opt-in area, which is covered by the petition;

(2) A description of all ways in which reformulated gasoline is relied upon as a control measure in any approved State or local implementation plan or plan revision, or in any submission to the Agency containing any proposed plan or plan revision (and any associated request for redesignation) that is pending before the Agency when the petition is submitted; and

(3) For any opt-in areas covered by the petition for which reformulated gasoline is relied upon as a control measure as described under paragraph (b)(2) of this section, the petition shall include the following information:

(i) Identify whether the State is withdrawing any such pending plan submission;

(ii)(A) Identify whether the State intends to submit a revision to any such approved plan provision or pending plan submission that does not rely on reformulated gasoline as a control measure, and describe the alternative air quality measures, if any, that the State plans to use to replace reformulated gasoline as a control measure;

(B) A description of the current status of any proposed revision to any such approved plan provision or pending plan submission, as well as a projected schedule for submission of such proposed revision;

(iii) If the State is not withdrawing any such pending plan submission and does not intend to submit a revision to any such approved plan provision or pending plan submission, describe why no revision is necessary;

(iv) If reformulated gasoline is relied upon in any pending plan submission, other than as a contingency measure consisting of a future opt-in, and the Agency has found such pending plan submission complete or made a protectiveness finding under 40 CFR 51.448 and 93.128, demonstrate whether the removal of the reformulated gasoline program will affect the completeness and/or protectiveness determinations;

(4) The Governor of a State, or his or her authorized representative, shall submit additional information upon request of the Administrator,

(c)(1) For opt-out petitions received on or before December 31, 1997, except as provided in paragraphs (c)(2) and (c)(3) of this section, the Administrator shall set an effective date for removal of an area under paragraph (a) of this section as requested by the Governor, but no less than 90 days from the Agency's written notification to the state approving the opt-out petition, and no later than December 31, 1999.

(2) For opt-out petitions received on or before December 31, 1997, except as provided in paragraph (c)(3) of this section, where RFG is contained as an element of any plan or plan revision that has been approved by the Agency, other than as a contingency measure consisting of a future opt-in, then the effective date under paragraph (a) of this section shall be the date requested by the Governor, but no less than 90 days from the effective date of Agency approval of a revision to the plan that removes RFG as a control measure.

(3)(i) The Administrator may extend the deadline for submitting opt-out petitions in paragraphs (c)(1) and (2) of this section for a state if:

(A) The Governor or his authorized representative requests an extension prior to December 31, 1997;

(B) The request indicates that there is active or pending legislation before the state legislature that was introduced prior to March 28, 1997;

(C) The legislation is concerning opting out of or remaining in the reformulated gasoline program; and

(D) The request demonstrates that the legislation cannot reasonably be acted upon prior to December 31, 1997.

(ii) The Administrator may extend the deadline until no later than May 31, 1998. If the deadline is extended, then opt-out requests from that state received during the extension shall be considered under the provisions of paragraphs (c)(1) and (2) of this section.

(4) For opt-out petitions received January 1, 1998 through December 31, 2003, except as provided in paragraph (c)(5) of this section, the Administrator shall set an effective date for removal of an area under paragraph (a) of this section as requested by the Governor but no earlier than January 1, 2004 or 90 days from the Agency's written notification to the state approving the opt-out petition, whichever date is later.

(5) For opt-out petitions received January 1, 1998 through December 31, 2003, where RFG is contained as an element of any plan or plan revision that has been approved by the Agency, other than as a contingency measure consisting of a future opt-in, then the effective date for removal of an area under paragraph (a) of this section shall be the date requested by the Governor, but no earlier than January 1, 2004, or 90 days from the effective date of Agency approval of a revision to the plan that removes RFG as a control measure, whichever date is later.

(6) For opt-out petitions received on or after January 1, 2004, except as provided in paragraph (c)(7) of this section, the Administrator shall set an effective date for removal of an area as requested by the Governor, but no less than 90 days from the Agency's written notification to the state approving the opt-out petition.

(7) For opt-out petitions received on or after January 1, 2004, where RFG is contained as an element of any plan or plan revision that has been approved by the Agency, other than as a contingency measure consisting of a future opt-in, then the effective date for removal of an area under paragraph (a) of this section shall be the date requested by the Governor, but no less than 90 days from the effective date of Agency approval of a revision to the plan that removes RFG as a control measure.

(d) The Administrator shall publish a notice in the FEDERAL REGISTER announcing the approval of any petition under paragraph (a) of this section, and the effective date for removal.

[61 FR 35680, July 8, 1996, as amended at 62 FR 54558, Oct. 20, 1997]

§ 80.73 Inability to produce conforming gasoline in extraordinary circumstances.

In appropriate extreme and unusual circumstances (e.g., natural disaster or Act of God) which are clearly outside the control of the refiner, importer, or oxygenate blender and which could not have been avoided by the exercise of prudence, diligence, and due care, EPA may permit a refiner, importer, or oxygenate blender, for a brief period, to distribute gasoline which does not meet the requirements for reformulated gasoline, if:

(a) It is in the public interest to do so (e.g., distribution of the nonconforming gasoline is necessary to meet projected shortfalls which cannot otherwise be compensated for);

(b) The refiner, importer, or oxygenate blender exercised prudent planning and was not able to avoid the violation and has taken all reasonable steps to minimize the extent of the nonconformity;

(c) The refiner, importer, or oxygenate blender can show how the requirements for reformulated gasoline will be expeditiously achieved;

(d) The refiner, importer, or oxygenate blender agrees to make up air quality detriment associated with the nonconforming gasoline, where practicable; and

(e) The refiner, importer, or oxygenate blender pays to the U.S. Treasury an amount equal to the economic benefit of the nonconformity minus the amount expended, pursuant to paragraph (d) of this section, in making up the air quality detriment.

§ 80.74 Recordkeeping requirements.

All parties in the gasoline distribution network, as described in this section, shall maintain records containing the information as required in this section. These records shall be retained

for a period of five years from the date of creation, and shall be delivered to the Administrator of EPA or to the Administrator's authorized representative upon request.

(a) *All regulated parties*. Any refiner, importer, oxygenate blender, carrier, distributor, reseller, retailer, or wholesale-purchaser who sells, offers for sale, dispenses, supplies, offers for supply, stores, transports, or causes the transportation of any reformulated gasoline or RBOB, shall maintain records containing the following information:

(1) The product transfer documentation for all reformulated gasoline or RBOB for which the party is the transferor or transferee; and

(2) For any sampling and testing on RBOB or reformulated gasoline:

(i) The location, date, time, and storage tank or truck identification for each sample collected;

(ii) The identification of the person who collected the sample and the person who performed the testing;

(iii) The results of the tests; and

(iv) The actions taken to stop the sale of any gasoline found not to be in compliance, and the actions taken to identify the cause of any noncompliance and prevent future instances of noncompliance.

(b) *Refiners and importers*. In addition to other requirements of this section, any refiner and importer shall, for all reformulated gasoline and RBOB produced or imported, maintain records containing the following information:

(1) Results of the tests to determine reformulated gasoline properties and characteristics specified in § 80.65;

(2) Results of the tests for the presence of the marker specified in § 80.82;

(3) The volume of gasoline associated with each of the above test results using the method normally employed at the refinery or import facility for this purpose;

(4) In the case of RBOB:

(i) The results of tests to ensure that, following blending, RBOB meets applicable standards; and

(ii) Each contract with each oxygenate blender to whom the refiner or importer transfers RBOB; or

(iii) Compliance calculations described in § 80.69(a)(8) based on an assumed addition of oxygenate;

(5) In the case of any refinery or importer subject to the simple model standards, the calculations used to determine the 1990 baseline levels of sulfur, T–90, and olefins, and the calculations used to determine compliance with the standards for these parameters; and

(6) In the case of any refinery or importer subject to the complex model standards before January 1, 1998, the calculations used to determine the baseline levels of VOC, toxics, and NO_x emissions performance.

(c) *Refiners, importers and oxygenate blenders of averaged gasoline*. In addition to other requirements of this section, any refiner, importer, and oxygenate blender who produces or imports any reformulated gasoline for which compliance with one or more applicable standard is determined on average shall maintain records containing the following information:

(1) The calculations used to determine compliance with the relevant standards on average, for each averaging period and for each quantity of gasoline for which standards must be separately achieved; and

(2) For any credits bought, sold, traded or transferred pursuant to § 80.67(h), the dates of the transactions, the names and EPA registration numbers of the parties involved, and the number(s) and type(s) of credits transferred.

(d) *Oxygenate blenders*. In addition to other requirements of this section, any oxygenate blender who blends any oxygenate with any RBOB shall, for each occasion such terminal storage tank blending occurs, maintain records containing the following information:

(i) The date, time, location, and identification of the blending tank or truck in which the blending occurred;

(ii) The volume and oxygenate requirements of the RBOB to which oxygenate was added; and

(iii) The volume, type, and purity of the oxygenate which was added, and documents which show the source(s) of the oxygenate used.

(e) *Distributors who dispense RBOB into trucks*. In addition to other requirements of this section, any distributor who dispenses any RBOB into a truck used for delivering gasoline to

retail outlets shall, for each occasion RBOB is dispensed into such a truck, obtain records identifying:

(1) The name and EPA registration number of the oxygenate blender that received the RBOB; and

(2) The volume and oxygenate requirements of the RBOB dispensed.

(f) *Conventional gasoline requirement.* In addition to other requirements of this section, any refiner and importer shall, for all conventional gasoline produced or imported, maintain records showing the blending of the marker required under § 80.82 into conventional gasoline, and the results of the tests showing the concentration of this marker subsequent to its addition.

(g) *Retailers before January 1, 1998.* Prior to January 1, 1998 any retailer that sells or offers for sale any reformulated gasoline shall maintain at each retail outlet the product transfer documentation for the most recent three deliveries to the retail outlet of each grade of reformulated gasoline sold or offered for sale at the retail outlet, and shall make such documentation available to any person conducting any gasoline compliance survey pursuant to § 80.68.

§ 80.75 Reporting requirements.

Any refiner, importer, and oxygenate blender shall report as specified in this section, and shall report such other information as the Administrator may require.

(a) *Quarterly reports for reformulated gasoline.* Any refiner or importer that produces or imports any reformulated gasoline or RBOB, and any oxygenate blender that produces reformulated gasoline meeting the oxygen standard on average, shall submit quarterly reports to the Administrator for each refinery or oxygenate blending facility at which such reformulated gasoline or RBOB was produced and for all such reformulated gasoline or RBOB imported by each importer.

(1) The quarterly reports shall be for all such reformulated gasoline or RBOB produced or imported during the following time periods:

(i) The first quarterly report shall include information for reformulated gasoline or RBOB produced or imported from January 1 through March 31, and shall be submitted by May 31 of each year beginning in 1995;

(ii) The second quarterly report shall include information for reformulated gasoline or RBOB produced or imported from April 1 through June 30, and shall be submitted by August 31 of each year beginning in 1995;

(iii) The third quarterly report shall include information for reformulated gasoline or RBOB produced or imported from July 1 through September 30, and shall be submitted by November 30 of each year beginning in 1995; and

(iv) The fourth quarterly report shall include information for reformulated gasoline or RBOB produced or imported from October 1 through December 31, and shall be submitted by the last day of February of each year beginning in 1996.

(2) The following information shall be included in each quarterly report for each batch of reformulated gasoline or RBOB which is included under paragraph (a)(1) of this section:

(i) The batch number;

(ii) The date of production;

(iii) The volume of the batch;

(iv) The grade of gasoline produced (i.e., premium, mid-grade, or regular);

(v) For any refiner or importer:

(A) Each designation of the gasoline, pursuant to § 80.65; and

(B) The properties, pursuant to §§ 80.65 and 80.66;

(vi) For any importer, the PADD in which the import facility is located; and

(vii) For any oxygenate blender, the oxygen content.

(3) Information pertaining to gasoline produced or imported during 1994 shall be included in the first quarterly report in 1995.

(b) *Reports for gasoline or RBOB produced or imported under the simple model*—(1) *RVP averaging reports.* (i) Any refiner or importer that produced or imported any reformulated gasoline or RBOB under the simple model that was to meet RVP standards on average (''averaged reformulated gasoline'') shall submit to the Administrator, with the third quarterly report, a report for each refinery or importer for such averaged reformulated gasoline or RBOB produced or imported during the previous RVP averaging period. This

information shall be reported separately for the following categories:

(A) Gasoline or RBOB which is designated as VOC-controlled intended for areas in VOC-Control Region 1; and

(B) Gasoline or RBOB which is designated as VOC-controlled intended for VOC-Control Region 2.

(ii) The following information shall be reported:

(A) The total volume of averaged reformulated gasoline or RBOB in gallons;

(B) The compliance total value for RVP; and

(C) The actual total value for RVP.

(2) *Sulfur, olefins and T90 averaging reports.* (i) Any refiner or importer that produced or imported any reformulated gasoline or RBOB under the simple model shall submit to the Administrator, with the fourth quarterly report, a report for such reformulated gasoline or RBOB produced or imported during the previous year:

(A) For each refinery or importer; or

(B) In the case of refiners who operate more than one refinery, for each grouping of refineries as designated by the refiner pursuant to § 80.41(h)(2)(iii).

(ii) The following information shall be reported:

(A) The total volume of reformulated gasoline or RBOB in gallons;

(B) The applicable sulfur content standard under § 80.41(h)(2)(i) in parts per million;

(C) The average sulfur content in parts per million;

(D) The difference between the applicable sulfur content standard under § 80.41(h)(2)(i) in parts per million and the average sulfur content under paragraph (b)(2)(ii)(C) of this section in parts per million, indicating whether the average is greater or lesser than the applicable standard;

(E) The applicable olefin content standard under § 80.41(h)(2)(i) in volume percent;

(F) The average olefin content in volume percent;

(G) The difference between the applicable olefin content standard under § 80.41(h)(2)(i) in volume percent and the average olefin content under paragraph (b)(2)(ii)(F) of this section in volume percent, indicating whether the average is greater or lesser than the applicable standard;

(H) The applicable T90 distillation point standard under § 80.41(h)(2)(i) in degrees Fahrenheit;

(I) The average T90 distillation point in degrees Fahrenheit; and

(J) The difference between the applicable T90 distillation point standard under § 80.41(h)(2)(i) in degrees Fahrenheit and the average T90 distillation point under paragraph (b)(2)(ii)(I) of this section in degrees Fahrenheit, indicating whether the average is greater or lesser than the applicable standard.

(c) *VOC emissions performance averaging reports.* (1) Any refiner or importer that produced or imported any reformulated gasoline or RBOB under the complex model that was to meet the VOC emissions performance standards on average (''averaged reformulated gasoline'') shall submit to the Administrator, with the third quarterly report, a report for each refinery or importer for such averaged reformulated gasoline produced or imported during the previous VOC averaging period. This information shall be reported separately for the following categories:

(i) Gasoline or RBOB which is designated as VOC-controlled intended for areas in VOC-Control Region 1; and

(ii) Gasoline or RBOB which is designated as VOC-controlled intended for VOC-Control Region 2.

(2) The following information shall be reported:

(i) The total volume of averaged reformulated gasoline or RBOB in gallons;

(ii) The compliance total value for VOC emissions performance; and

(iii) The actual total value for VOC emissions performance.

(d) *Benzene content averaging reports.* (1) Any refiner or importer that produced or imported any reformulated gasoline or RBOB that was to meet the benzene content standards on average (''averaged reformulated gasoline'') shall submit to the Administrator, with the fourth quarterly report, a report for each refinery or importer for such averaged reformulated gasoline that was produced or imported during the previous toxics averaging period.

(2) The following information shall be reported:

(i) The volume of averaged reformulated gasoline or RBOB in gallons;

(ii) The compliance total content of benzene;

(iii) The actual total content of benzene;

(iv) The number of benzene credits generated as a result of actual total benzene being less than compliance total benzene;

(v) The number of benzene credits required as a result of actual total benzene being greater than compliance total benzene;

(vi) The number of benzene credits transferred to another refinery or importer; and

(vii) The number of benzene credits obtained from another refinery or importer.

(e) *Toxics emissions performance averaging reports.* (1) Any refiner or importer that produced or imported any reformulated gasoline or RBOB that was to meet the toxics emissions performance standards on average (''averaged reformulated gasoline'') shall submit to the Administrator, with the fourth quarterly report, a report for each refinery or importer for such averaged reformulated gasoline that was produced or imported during the previous toxics averaging period.

(2) The following information shall be reported:

(i) The volume of averaged reformulated gasoline or RBOB in gallons;

(ii) The compliance value for toxics emissions performance; and

(iii) The actual value for toxics emissions performance.

(f) *Oxygen averaging reports.* (1) Any refiner, importer, or oxygenate blender that produced or imported any reformulated gasoline that was to meet the oxygen standards on average (''averaged reformulated gasoline'') shall submit to the Administrator, with the fourth quarterly report, a report for each refinery and oxygenate blending facility at which such averaged reformulated gasoline was produced and for all such averaged reformulated gasoline imported by each importer during the previous oxygen averaging period.

(2)(i) The following information shall be included in each report required by paragraph (f)(1) of this section:

(A) The total volume of averaged RBOB in gallons;

(B) The total volume of averaged reformulated gasoline in gallons;

(C) The compliance total content for oxygen;

(D) The actual total content for oxygen;

(E) The number of oxygen credits generated as a result of actual total oxygen being greater than compliance total oxygen;

(F) The number of oxygen credits required as a result of actual total oxygen being less than compliance total oxygen;

(G) The number of oxygen credits transferred to another refinery, importer, or oxygenate blending facility; and

(H) The number of oxygen credits obtained from another refinery, importer, or oxygenate blending facility.

(ii) The information required by paragraph (f)(2)(i) of this section shall be reported separately for the following categories:

(A) For gasoline subject to the simple model standards:

(*1*) Gasoline designated as VOC-controlled; and;

(*2*) Gasoline designated as non-VOC-controlled.

(B) For gasoline subject to the Phase I or Phase II complex model standards:

(*1*) Gasoline which is designated as OPRG; and

(*2*) Gasoline which is designated as non-OPRG.

(iii) The results of the compliance calculations required in § 80.67(f) shall also be included in each report required by paragraph (f)(1) of this section, for each of the following categories:

(A) All reformulated gasoline;

(B) Gasoline which is designated as non-OPRG; and

(C) For gasoline subject to the simple model standards, gasoline which is designated as VOC-controlled.

(g) *NO_X emissions performance averaging reports.* (1) Any refiner or importer that produced or imported any reformulated gasoline or RBOB that

was to meet the NO_X emissions performance standard on average (''averaged reformulated gasoline'') shall submit to the Administrator, with the fourth quarterly report, a report for each refinery or importer for such averaged reformulated gasoline that was produced or imported during the previous NO_X averaging period.

(2) The following information shall be reported:

(i) The volume of averaged reformulated gasoline or RBOB in gallons;

(ii) The compliance value for NO_X emissions performance; and

(iii) The actual value for NO_X emissions performance.

(3) The information required by paragraph (g)(2) of this section shall be reported separately for the following categories:

(i) Gasoline and RBOB which is designated as VOC-controlled; and

(ii) Gasoline and RBOB which is not designated as VOC-controlled.

(h) *Credit transfer reports.* (1) As an additional part of the fourth quarterly report required by this section, any refiner, importer, and oxygenate blender shall, for each refinery, importer, or oxygenate blending facility, supply the following information for any oxygen or benzene credits that are transferred from or to another refinery, importer, or oxygenate blending facility:

(i) The names, EPA-assigned registration numbers and facility identification numbers of the transferor and transferee of the credits;

(ii) The number(s) and type(s) of credits that were transferred; and

(iii) The date(s) of transaction(s).

(2) For purposes of this paragraph (h), oxygen credit transfers shall be reported separately for each of the following oxygen credit types:

(i) For gasoline subject to the simple model standards:

(A) VOC controlled; and

(B) Non-VOC controlled.

(ii) [Reserved]

(i) *Covered areas of gasoline use report.* Any refiner or oxygenate blender that produced or imported any reformulated gasoline that was to meet any reformulated gasoline standard on average (''averaged reformulated gasoline'') shall, for each refinery and oxygenate blending facility at which such averaged reformulated gasoline was produced submit to the Administrator, with the fourth quarterly report, a report that contains the identity of each covered area that was supplied with any averaged reformulated gasoline produced at each refinery or blended by each oxygenate blender during the previous year.

(j) *Additional reporting requirements for certain importers.* In the case of any importer to whom different standards apply for gasoline imported at different facilities by operation of § 80.41(q)(2), such importer shall submit separate reports for gasoline imported into facilities subject to different standards.

(k) *Reporting requirements for early use of the complex model.* Any refiner for any refinery, or any importer, that elects to be subject to complex model standards under § 80.41(i)(1) shall report such election in writing to the Administrator no later than sixty days prior to the beginning of the calendar year during which such standards would apply. This report shall include the refinery's or importer's baseline values for VOC, NO_X, and toxics emissions performance, in milligrams per mile.

(l) *Reports for per-gallon compliance gasoline.* In the case of reformulated gasoline or RBOB for which compliance with each of the standards set forth in § 80.41 is achieved on a per-gallon basis, the refiner, importer, or oxygenate blender shall submit to the Administrator, by the last day of February of each year beginning in 1996, a report of the volume of each designated reformulated gasoline or RBOB produced or imported during the previous calendar year for which compliance is achieved on a per-gallon basis, and a statement that each gallon of this reformulated gasoline or RBOB met the applicable standards.

(m) *Reports of compliance audits.* Any refiner, importer, and oxygenate blender shall cause to be submitted to the Administrator, by May 31 of each year, the report of the compliance audit required by § 80.65(h).

(n) *Report submission.* The reports required by this section shall be:

(1) Submitted on forms and following procedures specified by the Administrator; and

(2) Signed and certified as correct by the owner or a responsible corporate officer of the refiner, importer, or oxygenate blender.

[59 FR 7813, Feb. 16, 1994, as amended at 59 FR 36964, July 20, 1994; 60 FR 65574, Dec. 20, 1995; 62 FR 60135, Nov. 6, 1997]

§ 80.76 Registration of refiners, importers or oxygenate blenders.

(a) Registration with the Administrator of EPA is required for any refiner and importer, and any oxygenate blender that produces any reformulated gasoline.

(b) Any person required to register shall do so by November 1, 1994, or not later than three months in advance of the first date that such person will produce or import reformulated gasoline or RBOB, or conventional gasoline or applicable blendstocks, whichever is later.

(c) Registration shall be on forms prescribed by the Administrator, and shall include the following information:

(1) The name, business address, contact name, and telephone number of the refiner, importer, or oxygenate blender;

(2) For each separate refinery and oxygenate blending facility, the facility name, physical location, contact name, telephone number, and type of facility; and

(3) For each separate refinery and oxygenate blending facility, and for each importer's operations in a single PADD:

(i) Whether records are kept on-site or off-site of the refinery or oxygenate blending facility, or in the case of importers, the registered address;

(ii) If records are kept off-site, the primary off-site storage facility name, physical location, contact name, and telephone number; and

(iii) The name, address, contact name and telephone number of the independent laboratory used to meet the independent analysis requirements of § 80.65(f).

(d) EPA will supply a registration number to each refiner, importer, and oxygenate blender, and a facility registration number for each refinery and oxygenate blending facility that is identified, which shall be used in all reports to the Administrator.

(e)(1) Any refiner, importer, or oxygenate blender shall submit updated registration information to the Administrator within thirty days of any occasion when the registration information previously supplied becomes incomplete or inaccurate; except that

(2) EPA must be notified in writing of any change in designated independent laboratory at least thirty days in advance of such change.

[59 FR 7813, Feb. 16, 1994, as amended at 59 FR 36965, July 20, 1994]

§ 80.77 Product transfer documentation.

On each occasion when any person transfers custody or title to any reformulated gasoline or RBOB, other than when gasoline is sold or dispensed for use in motor vehicles at a retail outlet or wholesale purchaser-consumer facility, the transferor shall provide to the transferee documents which include the following information:

(a) The name and address of the transferor;

(b) The name and address of the transferee;

(c) The volume of gasoline which is being transferred;

(d) The location of the gasoline at the time of the transfer;

(e) The date of the transfer;

(f) The proper identification of the gasoline as conventional or reformulated;

(g) In the case of reformulated gasoline or RBOB:

(1) The proper identification as:

(i)(A) VOC-controlled for VOC-Control Region 1; or VOC-controlled for VOC-Control Region 2; or Not VOC-controlled; or

(B) In the case of gasoline or RBOB that is VOC-controlled for VOC-Control Region 1, the gasoline may be identified as suitable for use either in VOC-Control Region 1 or VOC-Control Region 2;

(ii) [Reserved]

(iii) Prior to January 1, 1998, certified under the simple model standards or certified under the complex model standards; and

(2) The minimum and/or maximum standards with which the gasoline or RBOB conforms for:

(i) Benzene content;

(ii) Except for RBOB, oxygen content;

(iii) In the case of VOC-controlled gasoline subject to the simple model standards, RVP;

(iv) In the case of gasoline subject to the complex model standards:

(A) Prior to January 1, 1998, the NOx emissions performance minimum, and for VOC-controlled gasoline the VOC emissions performance minimum, in milligrams per mile; and

(B) Beginning on January 1, 1998, for VOC-controlled gasoline, the VOC emissions performance minimum; and

(3) Identification of VOC-controlled reformulated gasoline or RBOB as gasoline or RBOB which contains ethanol, or which does not contain any ethanol.

(h) Prior to January 1, 1998, in the case of reformulated gasoline or RBOB subject to the complex model standards:

(1) The name and EPA registration number of the refinery at which the gasoline was produced, or importer that imported the gasoline; and

(2) Instructions that the gasoline or RBOB may not be combined with any other gasoline or RBOB that was produced at any other refinery or was imported by any other importer;

(i) In the case of reformulated gasoline blendstock for which oxygenate blending is intended:

(1) Identification of the product as RBOB and not reformulated gasoline;

(2) The designation of the RBOB as suitable for blending with:

(A) Any-oxygenate;

(B) Ether-only; or

(C) Other specified oxygenate type(s) and amount(s); and

(3) The oxygenate type(s) and amount(s) which the RBOB requires in order to meet the properties claimed by the refiner or importer of the RBOB;

(4) Instructions that the RBOB may not be combined with any other RBOB except other RBOB having the same requirements for oxygenate type(s) and amount(s), or, prior to blending, with reformulated gasoline; and

(j) In the case of transferrers or transferees who are refiners, importers or oxygenate blenders, the EPA-assigned registration number of those persons.

[59 FR 7813, Feb. 16, 1994, as amended at 59 FR 36965, July 20, 1994; 62 FR 60136, Nov. 6, 1997; 62 FR 68207, Dec. 31, 1997]

§ 80.78 Controls and prohibitions on reformulated gasoline.

(a) *Prohibited activities.* (1) No person may manufacture and sell or distribute, offer for sale or distribution, dispense, supply, offer for supply, store, transport, or cause the transportation of any gasoline represented as reformulated and intended for sale or use in any covered area:

(i) Unless each gallon of such gasoline meets the applicable benzene maximum standard specified in § 80.41;

(ii) Unless each gallon of such gasoline meets the applicable oxygen content:

(A) Minimum standard specified in § 80.41; and

(B) In the case of gasoline subject to simple model standards, maximum standard specified in § 80.41;

(iii) Unless each gallon is properly designated as oxygenated fuels program reformulated gasoline, within any oxygenated gasoline program control areas during the oxygenated gasoline control period;

(iv) Unless the product transfer documentation for such gasoline complies with the requirements in § 80.77; and

(v) During the period May 1 through September 15 for all persons except retailers and wholesale purchaser-consumers, and during the period June 1 through September 15 for all persons including retailers and wholesale purchaser-consumers:

(A) Unless each gallon of such gasoline is VOC-controlled for the proper VOC Control Region, except that gasoline designated for VOC-Control Region 1 may be used in VOC-Control Region 2;

(B) Unless each gallon of such gasoline that is subject to simple model standards has an RVP which is less than or equal to the applicable RVP maximum specified in § 80.41;

(C) Unless each gallon of such gasoline that is subject to complex model standards has a VOC emissions reduction percentage which is greater than

or equal to the applicable minimum specified in § 80.41.

(2) No refiner or importer may produce or import any gasoline represented as reformulated or RBOB, and intended for sale or use in any covered area:

(i) Unless such gasoline meets the definition of reformulated gasoline or RBOB; and

(ii) Unless the properties of such gasoline or RBOB correspond to the product transfer documents.

(3) No person may manufacture and sell or distribute, or offer for sale or distribution, dispense, supply, or offer for supply, store, transport or cause the transportation of gasoline represented as conventional which does not contain at least the minimum concentration of the conventional gasoline marker specified in § 80.82.

(4) Gasoline shall be presumed to be intended for sale or use in a covered area unless:

(i) Product transfer documentation as described in § 80.77 accompanying such gasoline clearly indicates the gasoline is intended for sale and use only outside any covered area; or

(ii) The gasoline is contained in the storage tank of a retailer or wholesale purchaser-consumer outside any covered area.

(5) No person may combine any reformulated gasoline with any non-oxygenate blendstock except:

(i) A person that meets each requirement specified for a refiner under this subpart; and

(ii) The blendstock that is added to reformulated gasoline meets all reformulated gasoline standards without regard to the properties of the reformulated gasoline to which the blendstock is added.

(6) No person may add any oxygenate to reformulated gasoline, except that such oxygenate may be added to reformulated gasoline provided that such gasoline is used in an oxygenated fuels program control area during an oxygenated fuels control period.

(7) No person may combine any reformulated gasoline blendstock for oxygenate blending with any other gasoline, blendstock, or oxygenate except:

(i) Oxygenate of the type and amount (or within the range of amounts) specified by the refiner or importer at the time the RBOB was produced or imported; or

(ii) Other RBOB for which the same oxygenate type and amount (or range of amounts) was specified by the refiner or importer.

(8) No person may combine any VOC-controlled reformulated gasoline that is produced using ethanol with any VOC-controlled reformulated gasoline that is produced using any other oxygenate during the period January 1 through September 15.

(9) Prior to January 1, 1998:

(i) No person may combine any reformulated gasoline or RBOB that is subject to the simple model standards with any reformulated gasoline or RBOB that is subject to the complex model standards, except that such gasolines may be combined at a retail outlet or wholesale purchaser-consumer facility;

(ii) No person may combine any reformulated gasoline subject to the complex model standards that is produced at any refinery or is imported by any importer with any other reformulated gasoline that is produced at a different refinery or is imported by a different importer, unless the other refinery or importer has an identical baseline for meeting complex model standards during this period; and

(iii) No person may combine any RBOB subject to the complex model standards that is produced at any refinery or is imported by any importer with any RBOB that is produced at a different refinery or is imported by a different importer, unless the other refinery or importer has an identical baseline for meeting complex model standards during this period.

(10) No person may combine any reformulated gasoline with any conventional gasoline and sell the resulting mixture as reformulated gasoline.

(b) *Liability*. Liability for violations of paragraph (a) of this section shall be determined according to the provisions of § 80.79.

(c) *Determination of compliance*. Compliance with the standards listed in paragraph (a) of this section shall be determined by use of one of the testing methodologies specified in § 80.46, except that where test results using the

testing methodologies specified in § 80.46 are not available or where such test results are available but are in question, EPA may establish noncompliance with standards using any information, including the results of testing using methods that are not included in § 80.46.

(d) *Dates controls and prohibitions begin*. The controls and prohibitions specified in paragraph (a) of this section apply at any location other than retail outlets and wholesale purchaser-consumer facilities on or after December 1, 1994, at any location on or after January 1, 1995.

[59 FR 7813, Feb. 16, 1994, as amended at 59 FR 36965, July 20, 1994; 62 FR 60136, Nov. 6, 1997; 62 FR 68207, Dec. 31, 1997]

§ 80.79 Liability for violations of the prohibited activities.

(a) *Persons liable*. Where the gasoline contained in any storage tank at any facility owned, leased, operated, controlled or supervised by any refiner, importer, oxygenate blender, carrier, distributor, reseller, retailer, or wholesale purchaser-consumer is found in violation of the prohibitions described in § 80.78(a), the following persons shall be deemed in violation:

(1) Each refiner, importer, oxygenate blender, carrier, distributor, reseller, retailer, or wholesale purchaser-consumer who owns, leases, operates, controls or supervises the facility where the violation is found;

(2) Each refiner or importer whose corporate, trade, or brand name, or whose marketing subsidiary's corporate, trade, or brand name, appears at the facility where the violation is found;

(3) Each refiner, importer, oxygenate blender, distributor, and reseller who manufactured, imported, sold, offered for sale, dispensed, supplied, offered for supply, stored, transported, or caused the transportation of any gasoline which is in the storage tank containing gasoline found to be in violation; and

(4) Each carrier who dispensed, supplied, stored, or transported any gasoline which is in the storage tank containing gasoline found to be in violation, provided that EPA demonstrates, by reasonably specific showings by direct or circumstantial evidence, that the carrier caused the violation.

(b) *Defenses for prohibited activities*. (1) In any case in which a refiner, importer, oxygenate blender, carrier, distributor, reseller, retailer, or wholesale purchaser-consumer would be in violation under paragraph (a) of this section, it shall be deemed not in violation if it can demonstrate:

(i) That the violation was not caused by the regulated party or its employee or agent;

(ii) That product transfer documents account for all of the gasoline in the storage tank found in violation and indicate that the gasoline met relevant requirements; and

(iii)(A) That it has conducted a quality assurance sampling and testing program, as described in paragraph (c) of this section; except that

(B) A carrier may rely on the quality assurance program carried out by another party, including the party that owns the gasoline in question, provided that the quality assurance program is carried out properly.

(2)(i) Where a violation is found at a facility which is operating under the corporate, trade or brand name of a refiner, that refiner must show, in addition to the defense elements required by paragraph (b)(1) of this section, that the violation was caused by:

(A) An act in violation of law (other than the Act or this part), or an act of sabotage or vandalism;

(B) The action of any reseller, distributor, oxygenate blender, carrier, or a retailer or wholesale purchaser- consumer supplied by any of these persons, in violation of a contractual undertaking imposed by the refiner designed to prevent such action, and despite periodic sampling and testing by the refiner to ensure compliance with such contractual obligation; or

(C) The action of any carrier or other distributor not subject to a contract with the refiner but engaged by the refiner for transportation of gasoline, despite specification or inspection of procedures and equipment by the refiner which are reasonably calculated to prevent such action.

(ii) In this paragraph (b), to show that the violation ''was caused'' by any of the specified actions the party must

demonstrate by reasonably specific showings, by direct or circumstantial evidence, that the violation was caused or must have been caused by another.

(c) *Quality assurance program.* In order to demonstrate an acceptable quality assurance program for reformulated gasoline at all points in the gasoline distribution network, other than at retail outlets and wholesale purchaser-consumer facilities, a party must present evidence of the following.

(1) Of a periodic sampling and testing program to determine if the applicable maximum and/or minimum standards for oxygen, benzene, RVP, or VOC emission performance are met.

(2) That on each occasion when gasoline is found in noncompliance with one of the requirements referred to in paragraph (c)(1) of this section:

(i) The party immediately ceases selling, offering for sale, dispensing, supplying, offering for supply, storing, transporting, or causing the transportation of the violating product; and

(ii) The party promptly remedies the violation (such as by removing the violating product or adding more complying product until the applicable standards are achieved).

(3) An oversight program conducted by a carrier under paragraph (c)(1) of this section need not include periodic sampling and testing of gasoline in a tank truck operated by a common carrier, but in lieu of such tank truck sampling and testing the common carrier shall demonstrate evidence of an oversight program for monitoring compliance with the requirements of § 80.78 relating to the transport or storage of gasoline by tank truck, such as appropriate guidance to drivers on compliance with applicable requirements and the periodic review of records normally received in the ordinary course of business concerning gasoline quality and delivery.

[38 FR 1255, Jan. 10, 1973, as amended at 62 FR 68207, Dec. 31, 1997]

§ 80.80 Penalties.

(a) Any person that violates any requirement or prohibition of subpart D, E, or F of this part shall be liable to the United States for a civil penalty of not more than the sum of $25,000 for every day of each such violation and the amount of economic benefit or savings resulting from each such violation.

(b) Any violation of a standard for average compliance during any averaging period, or for per-gallon compliance for any batch of gasoline, shall constitute a separate violation for each and every standard that is violated.

(c) Any violation of any standard based upon a multi-day averaging period shall constitute a separate day of violation for each and every day in the averaging period. Any violation of any credit creation or credit transfer requirement shall constitute a separate day of violation for each and every day in the averaging period.

(d)(1)(i) Any violation of any per- gallon standard or of any per-gallon minimum or per-gallon maximum, other than the standards specified in paragraph (e) of this section, shall constitute a separate day of violation for each and every day such gasoline giving rise to such violations remains any place in the gasoline distribution system, beginning on the day that the gasoline that violates such per-gallon standard is produced or imported and distributed and/or offered for sale, and ending on the last day that any such gasoline is offered for sale or is dispensed to any ultimate consumer for use in any motor vehicle; unless

(ii) The violation is corrected by altering the properties and characteristics of the gasoline giving rise to the violations and any mixture of gasolines that contains any of the gasoline giving rise to the violations such that the said gasoline or mixture of gasolines has the properties and characteristics that would have existed if the gasoline giving rise to the violations had been produced or imported in compliance with all per-gallon standards.

(2) For the purposes of this paragraph (d), the length of time the gasoline in question remained in the gasoline distribution system shall be deemed to be twenty-five days; unless the respective party or EPA demonstrates by reasonably specific showings, by direct or circumstantial evidence, that the gasoline giving rise to the violations remained any place in the gasoline distribution system for fewer than or more than twenty-five days.

(e)(1) Any reformulated gasoline that is produced or imported and offered for sale and for which the requirements to determine the properties and characteristics under § 80.65(f) is not met, or any conventional gasoline for which the refiner or importer does not sample and test to determine the relevant properties, shall be deemed:

(i)(A) Except as provided in paragraph (e)(1)(i)(B) of this section to have the following properties:

Sulfur content—970 ppm
Benzene content—5 vol %
RVP (summer)—11 psi
50% distillation—250 °F
90% distillation—375 °F
Oxygen content—0 wt %
Aromatics content—50 vol %
Olefins content—26 vol %

(B) To have the following properties in paragraph (e)(1)(i)(A) of this section unless the respective party or EPA demonstrates by reasonably specific showings, by direct or circumstantial evidence, different properties for the gasoline giving rise to the violations; and

(ii) In the case of reformulated gasoline, to have been designated as meeting all applicable standards on a pergallon basis.

(2) For the purposes of paragraph (e)(1) of this section, any refiner or importer that fails to meet the independent analysis requirements of § 80.65(f) may not use the results of sampling and testing that is carried out by that refiner or importer as direct or circumstantial evidence of the properties of the gasoline giving rise to the violations, unless this failure was not caused by the refiner or importer.

(f) Any violation of any affirmative requirement or prohibition not included in paragraph (c) or (d) of this section shall constitute a separate day of violation for each and every day such affirmative requirement is not properly accomplished, and/or for each and every day the prohibited activity continues. For those violations that may be ongoing under subparts D, E, and F of this part, each and every day the prohibited activity continues shall constitute a separate day of violation.

§ 80.81 Enforcement exemptions for California gasoline.

(a)(1) The requirements of subparts D, E, F and J of this part are modified in accordance with the provisions contained in this section in the case of California gasoline.

(2) For the purposes of this section, ''California gasoline'' means any gasoline that is sold, intended for sale, or made available for sale as a motor vehicle fuel in the State of California and that:

(i) Is manufactured within the State of California;

(ii) Is imported into the State of California from outside the United States; or

(iii) Is imported into the State of California from inside the United States and that is manufactured at a refinery that does not produce reformulated gasoline for sale in any covered area outside the State of California.

(b)(1) Any refiner, importer, or oxygenate blender of gasoline that is sold, intended for sale, or made available for sale as a motor fuel in the State of California is, with regard to such gasoline, exempt from the compliance survey provisions contained in § 80.68.

(2) Any refiner, importer, or oxygenate blender of California gasoline is, with regard to such gasoline, exempt from the independent analysis requirements contained in § 80.65(f).

(3) Any refiner, importer, or oxygenate blender of California gasoline that elects to meet any benzene content, oxygen content, or toxics emission reduction standard specified in § 80.41 on average for any averaging period specified in § 80.67 that is in part before March 1, 1996, and in part subsequent to such date, shall, with regard to such gasoline that is produced or imported prior to such date, demonstrate compliance with each of the standards specified in § 80.41 for each of the following averaging periods in lieu of those specified in § 80.67:

(i) January 1 through December 31, 1995; and

(ii) March 1, 1995, through February 29, 1996.

(4) The compliance demonstration required by paragraph (b)(3)(ii) of this section shall be submitted no later

than May 31, 1996, along with the report for the first quarter of 1996 required to be submitted under § 80.75(a)(1)(i).

(c) Any refiner, importer, or oxygenate blender of California gasoline that is manufactured or imported subsequent to March 1, 1996, and that meets the requirements of the California Phase 2 reformulated gasoline regulations, as set forth in Title 13, California Code of Regulations, sections 2260 et seq., is, with regard to such gasoline, exempt from the following requirements (in addition to the requirements specified in paragraph (b) of this section):

(1) The parameter value reconciliation requirements contained in § 80.65(e)(2);

(2) The designation of gasoline requirements contained in § 80.65(d), except in the case of RBOB that is designated as ''any renewable oxygenate,'' ''non-VOC controlled renewable ether only'', or ''renewable ether only'';

(3) The reformulated gasoline and RBOB compliance requirements contained in § 80.65(c);

(4) The marking of conventional gasoline requirements contained in §§ 80.65(g) and 80.82;

(5) The annual compliance audit requirements contained in § 80.65(h), except where such audits are required with regard to the renewable oxygenate requirements contained in § 80.83;

(6) The downstream oxygenate blending requirements contained in § 80.69, except where such requirements apply to the renewable oxygenate requirements contained in § 80.83;

(7) The record keeping requirements contained in §§ 80.74 and 80.104, except that records required to be maintained under Title 13, California Code of Regulations, section 2270, shall be maintained for a period of five years from the date of creation and shall be delivered to the Administrator or to the Administrator's authorized representative upon request;

(8) The reporting requirements contained in §§ 80.75 and 80.105;

(9) The product transfer documentation requirements contained in § 80.77; and

(10) The compliance attest engagement requirements contained in subpart F of this part, except where such requirements apply to the renewable oxygenate requirements contained in § 80.83.

(d) Any refiner, importer, or oxygenate blender that produces or imports gasoline that is sold, intended for sale, or made available for sale as a motor vehicle fuel in the State of California subsequent to March 1, 1996, shall demonstrate compliance with the standards specified in §§ 80.41 and 80.90 by excluding the volume and properties of such gasoline from all conventional gasoline and reformulated gasoline that it produces or imports that is not sold, intended for sale, or made available for sale as a motor vehicle fuel in the State of California subsequent to such date. The exemption provided in this section does not exempt any refiner or importer from demonstrating compliance with such standards for all gasoline that it produces or imports.

(e)(1) The exemption provisions contained in paragraphs (b)(2), (b)(3), (c), and (f) of this section shall not apply under the circumstances set forth in paragraphs (e)(2) and (e)(3) of this section.

(2) Such exemption provisions shall not apply to any refiner, importer, or oxygenate blender of California gasoline with regards to any gasoline formulation that it produces or imports is certified under Title 13, California Code of Regulations, section 2265 or section 2266 (as amended July 2, 1996), unless:

(i) *Written notification option.* (A) The refiner, importer, or oxygenate blender, within 30 days of the issuance of such certification:

(1) Notifies the Administrator of such certification;

(2) Submits to the Administrator copies of the applicable certification order issued by the State of California and the application for certification submitted by the regulated party to the State of California; and

(3) Submits to the Administrator a written demonstration that all gasoline formulations produced, imported or blended by the refiner, importer or oxygenate blender for use in California meets each of the complex model pergallon standards specified in § 80.41(c).

(B) If the Administrator determines that the written demonstration submitted under paragraph (e)(2)(i)(A) of this section does not demonstrate that all certified gasoline formulations meet each of the complex model pergallon standards specified in § 80.41(c), the Administrator shall provide notice to the party (by first class mail) of such determination and of the date on which the exemption provisions specified in paragraph (e)(1) of this section shall no longer be applicable, which date shall be no earlier than 90 days after the date of the Administrator's notification.

(ii) *Compliance survey option*. The compliance survey requirements of § 80.68 are met for each covered area in California for which the refiner, importer or oxygenate blender supplies gasoline for use in the covered area, except that:

(A) The survey series must determine compliance only with the oxygen content standard of 2.0 weight-percent;

(B) The survey series must consist of at least four surveys a year for each covered area;

(C) The surveys shall not be included in determining the number of surveys under § 80.68(b)(2);

(D) In the event a survey series conducted under this paragraph (e)(2)(ii) fails in accordance with § 80.68(c)(12), the provisions of §§ 80.41(o), (p) and (q) are applicable, except that if the survey series failure occurs in a year in which the applicable minimum oxygen content is 1.7 weight percent, the compliance survey option of this section shall not be applicable for any future year; and

(E) Not withstanding § 80.41(o), in the event a covered area passes the oxygen content series in a year, the minimum oxygen content standard for that covered area beginning in the year following the passed survey series shall be made less stringent by decreasing the minimum oxygen content standard by 0.1%, except that in no case shall the minimum oxygen content standard be less than that specified in § 80.41(d).

(3)(i) Such exemption provisions shall not apply to any refiner, importer, or oxygenate blender of California gasoline who has been assessed a civil, criminal or administrative penalty for a violation of subpart D, E or F of this part or for a violation of the California Phase 2 reformulated gasoline regulations set forth in Title 13, California Code of Regulations, sections 2260 et seq., effective 90 days after the date of final agency or district court adjudication of such penalty assessment.

(ii) Any refiner, importer, or oxygenate blender subject to the provisions of paragraph (e)(3)(i) of this section may submit a petition to the Administrator for relief, in whole or in part, from the applicability of such provisions, for good cause. Good cause may include a showing that the violation for which a penalty was assessed was not a substantial violation of the Federal or California reformulated gasoline regulations.

(f) In the case of any gasoline that is sold, intended for sale, or made available for sale as a motor vehicle fuel in the State of California subsequent to March 1, 1996, any person that manufactures, sells, offers for sale, dispenses, supplies, offers for supply, stores, transports, or causes the transportation of such gasoline is, with regard to such gasoline, exempt from the following prohibited activities provisions:

(1) The oxygenated fuels provisions contained in § 80.78(a)(1)(iii);

(2) The product transfer provisions contained in § 80.78(a)(1)(iv);

(3) The oxygenate blending provisions contained in § 80.78(a)(7); and

(4) The segregation of simple and complex model certified gasoline provision contained in § 80.78(a)(9).

(g)(1) Any refiner that operates a refinery located outside the State of California at which California gasoline (as defined in paragraph (a)(2)(iii) of this section) is produced shall, with regard to such gasoline, provide to any person to whom custody or title of such gasoline is transferred, and each transferee shall provide to any subsequent transferee, documents which include the following information:

(i) The name and address of the transferor;

(ii) The name and address of the transferee;

(iii) The volume of gasoline which is being transferred;

(iv) The location of the gasoline at the time of the transfer;

(v) The date and time of the transfer;

(vi) The identification of the gasoline as California gasoline; and

(vii) In the case of transferrors and transferrees who are refiners, importers or oxygenate blenders, the EPA- assigned registration number of such persons.

(2) Each refiner and transferee of such gasoline shall maintain copies of the product transfer documents required to be provided by paragraph (g)(1) of this section for a period of five years from the date of creation and shall deliver such documents to the Administrator or to the Administrator's authorized representative upon request.

(h)(1) For the purposes of the batch sampling and analysis requirements contained in §80.65(e)(1)and §80.101(i)(1)(i)(A), any refiner, importer or oxygenate blender of California gasoline may use a sampling and/or analysis methodology prescribed in Title 13, California Code of Regulations, sections 2260 *et seq.* (as amended July 2, 1996), in lieu of any applicable methodology specified in §80.46, with regards to

(i) Such gasoline; or

(ii) That portion of its gasoline produced or imported for use in other areas of the United States, provided that:

(A) The gasoline must be produced by a refinery that is located in the state of California that produces California gasoline, or imported into California from outside the United States as California Phase 2 gasoline;

(B) The gasoline must be classified as conventional gasoline upon exportation from the California; and

(C) The refiner or importer must correlate the results from the applicable sampling and /or analysis methodology prescribed in Title 13, California Code of Regulations, sections 2260 *et seq.* (as amended July 2, 1996), with the method specified at §80.46, and such correlation must be adequately demonstrated to EPA upon request.

(2) Nothwithstanding the requirements of §80.65(e)(1) regarding when the properties of a batch of reformulated gasoline must be determined, a refiner of California gasoline may determine the properties of gasoline as specified under §80.65(e)(1) at off site tankage provided that:

(i) The samples are properly collected under the terms of a current and valid protocol agreement between the refiner and the California Air Resources Board with regard to sampling at the off site tankage and consistent with requirements prescribed in Title 13, California Code of Regulations, sections 2260 *et seq.*(as amended July 2, 1996); and

(ii) The refiner provides a copy of the protocol agreement to EPA upon request.

[59 FR 7813, Feb. 16, 1994, as amended at 59 FR 36965, July 20, 1994; 59 FR 39289, Aug. 2, 1994; 59 FR 60715, Nov. 28, 1994; 63 FR 34825, June 26, 1998; 64 FR 49997, Sept. 15, 1999; 66 FR 17263, Mar. 29, 2001]

EFFECTIVE DATE NOTES: 1. At 59 FR 39289, Aug. 2, 1994, §80.81 was amended by revising paragraphs (c)(2), (c)(5), (c)(6), and (c)(10) effective September 1, 1994. At 59 FR 60715, Nov. 28, 1994, the amendment was stayed effective September 13, 1994.

§80.82 Conventional gasoline marker. [Reserved]

§80.83 Renewable oxygenate requirements.

(a) *Definition of renewable oxygenate.* For purposes of subparts D and F of this part, renewable oxygenate is defined as provided in this paragraph (a).

(1) In the case of oxygenate added to reformulated gasoline or RBOB that is not designated as VOC-controlled or that is not subject to the additional requirements associated with an extended non-commingling season pursuant to §80.83(i), renewable oxygenate shall be:

(i) An oxygenate that is derived from non-fossil fuel feedstocks; or

(ii) An ether that is produced using an oxygenate that is derived from non-fossil fuel feedstocks.

(2) In the case of oxygenate added to reformulated gasoline or RBOB that is designated as VOC-controlled or that is subject to the additional requirements associated with an extended non-commingling season pursuant to §80.83(i), renewable oxygenate shall be an ether that meets the requirements of paragraph (a)(1)(ii) or (a)(3) of this section.

(3) An oxygenate other than those ethers specified in paragraphs (a)(1) or (a)(2) of this section may be considered a renewable oxygenate if the Administrator approves a petition to that effect. The Administrator may approve such a petition if it is demonstrated to the satisfaction of the Administrator that the oxygenate does not cause volatility increases in gasoline that are non-linear in nature (i.e., a non-linear vapor pressure blending curve). The Administrator may approve a petition subject to any appropriate conditions or limitations.

(4)(i) Oxygenate shall be renewable only if the refiner, importer, or oxygenate blender who uses the oxygenate is able to establish in the form of documentation that the oxygenate was produced from a non-fossil fuel feedstock.

(ii)(A) Any person who produces renewable oxygenate, as defined in paragraph (a)(1) of this section, or who stores, transports, transfers, or sells such renewable oxygenate, and where such renewable oxygenate is intended to be used in the production of gasoline, shall maintain documents that state the renewable source of the oxygenate, and shall supply to any transferee of the oxygenate documents which state the oxygenate is from a renewable source.

(B) Any person who imports oxygenate that is represented by the importer to be renewable oxygenate, as defined in paragraph (a) of this section, shall maintain documents, obtained from the person who produced the oxygenate, that include a certification signed by the owner or chief executive officer of the company that produced the oxygenate that states:

(*1*) The nature of the feedstock for the oxygenate; and

(*2*) A description of the manner in which the oxygenate meets the renewable definition under paragraph (a) of this section.

(iii) No person may represent any oxygenate as renewable unless the oxygenate meets the renewable definition under paragraph (a) of this section.

(5) For purposes of this section, an oxygenate shall be considered to be derived from non-fossil fuel feedstocks only if the oxygenate is:

(i) Derived from a source other than petroleum, coal, natural gas, or peat; or

(ii) Derived from a product:

(A) That was produced using petroleum, coal, natural gas, or peat through a substantial transformation of the fossil fuel;

(B) When the product was initially produced, it was not commonly used to generate energy (e.g. automobile tires); and

(C) The product was sold or transferred for a use other than energy generation, and was later treated as a waste product.

(b) *Renewable oxygenate standard.* (1) The reformulated gasoline and reformulated gasoline produced using RBOB that is produced by any refiner at each refinery, or is imported by any importer, shall contain a volume of renewable oxygenate such that the reformulated gasoline and reformulated gasoline produced using RBOB, on average, has an oxygen content from such renewable oxygenate that is equal to or greater than 0.30 wt% for the period of December 1, 1994 through December 31, 1995, and 0.60 wt% beginning on January 1, 1996.

(2) The averaging period for the renewable oxygenate standard specified in paragraph (b)(1) of this section shall be:

(i) Each calendar year; except that

(ii)Any reformulated gasoline and RBOB that is produced or imported prior to January 1, 1995 shall be averaged with reformulated gasoline and RBOB produced or imported during 1995.

(3)(i) The oxygenate used to meet the standard under paragraph (b)(1) of this section may also be used to meet any oxygen standard under § 80.41; except that

(ii) The renewable oxygenate added by a downstream oxygenate blender shall not be used by any refiner or importer to meet the oxygen standard under § 80.41, except through the transfer of oxygen credits.

(c) *Downstream oxygenate blending using renewable oxygenate.* (1) In the case of any refiner that produces RBOB, or any importer that imports RBOB, the oxygenate that is blended with the RBOB may be included with

the refiner's or importer's compliance calculations under paragraph (d) of this section only if:

(i) The oxygenate meets the applicable renewable oxygenate definition under paragraph (a) of this section; and

(ii) The refiner or importer meets the downstream oxygenate blending oversight requirements specified in §§ 80.69(a)(6) and (7); or

(iii)(A) In the case of RBOB designated for ''any renewable oxygenate'' the refiner or importer assumes that ethanol will be blended with the RBOB;

(B) In the case of RBOB designated for ''renewable ether only'' or ''non-VOC controlled renewable ether only '', the refiner or importer assumes that ETBE will be blended with the RBOB; and

(C) In the case of ''any renewable oxygenate,'' ''non-VOC controlled renewable ether only'' and ''renewable ether only RBOB,'' the refiner or importer assumes that the volume of oxygenate added will be such that the resulting reformulated gasoline will have an oxygen content of 2.0 wt%.

(2)(i) No person may combine any oxygenate with RBOB designated as ''any renewable oxygenate'' unless the oxygenate meets the criteria specified in paragraph (a) of this section.

(ii) No person may combine any oxygenate with RBOB designated as ''renewable ether only'' or ''non-VOC controlled renewable ether only'' unless the oxygenate meets the criteria specified in paragraph (a) of this section.

(d) *Compliance calculation*. (1) Any refiner for each of its refineries, and any importer shall, for each averaging period, determine compliance with the renewable oxygenate standard by calculating:

(i) Prior to January 1, 1996, renewable oxygen compliance total using the following formula:

$$CT_{ro} = \left(\sum_{i=1}^{n} V_i \right) * 0.30$$

(ii) Beginning on January 1, 1996, the renewable oxygen compliance total using the following formula:

$$CT_{ro} = \left(\sum_{i=1}^{n} V_i \right) * 0.60$$

where

CT_{ro} = the compliance total for renewable oxygen

V_i = the volume of reformulated gasoline or RBOB batch i

n = the number of batches of reformulated gasoline and RBOB produced or imported during the averaging period

(iii) The renewable oxygen actual total using the following formula:

$$AT_{ro} = \sum_{i=1}^{n} \left(V_i * RO_i \right)$$

where

AT_{ro} = the actual total for renewable oxygen

V_i = the volume of gasoline or RBOB batch i

RO_i = the oxygen content, in wt%, in the form of renewable oxygenate of gasoline or RBOB batch i

n = the number of batches of gasoline or RBOB produced or imported during the averaging period

(iv) Compare the renewable oxygen actual total with the renewable oxygen compliance total.

(2)(i) The actual total must be equal to or greater than the compliance totals to achieve compliance, subject to the credit transfer provisions of paragraph (e) of this section.

(ii) If the renewable oxygen actual total is less than the renewable oxygen compliance total, renewable oxygen credits must be obtained from another refinery or importer in order to achieve compliance.

(iii) The total number of renewable oxygen credits required to achieve compliance is calculated by subtracting the renewable oxygen actual total from the renewable oxygen compliance total.

(iv) If the renewable oxygen actual total is greater than the renewable oxygen compliance total, renewable oxygen credits are generated.

(v) The total number of renewable oxygen credits which may be traded to a refiner for a refinery, or to another importer, is calculated by subtracting the renewable oxygen compliance total from the renewable oxygen actual total.

(e) *Credit transfers*. Compliance with the renewable oxygenate standard specified in paragraph (b)(1) of this section may be achieved through the transfer of renewable oxygen credits, provided that the credits meet the criteria specified in §§ 80.67(h)(1) (i) through (iv) and §§ 80.67(h) (2) and (3).

(f) *Recordkeeping*. Any refiner or importer, or any oxygenate blender who blends oxygenate with any RBOB designated as ''*any renewable oxygenate,*'' ''non VOC controlled renewable ether only'' or ''renewable ether only'' shall for a period of five years maintain the records specified in this paragraph (f) in a manner consistent with the requirements under § 80.74, and deliver such records to the Administrator upon request. The records shall contain the following information:

(1)(i) Documents demonstrating the renewable nature and source of the oxygenate used, consistent with the requirements of paragraph (a)(3) of this section;

(ii) The volume, type, and purity of any renewable oxygenate used; and

(iii) Product transfer documentation for all renewable oxygenate, reformulated gasoline, or RBOB for which the party is the transferor or transferee.

(2) The requirements of this paragraph (f) shall apply in addition to the recordkeeping requirements specified in § 80.74(e).

(g) *Reporting requirements*. (1) Any refiner for each refinery, or any importer, shall for each batch of reformulated gasoline and RBOB include in the quarterly reports for reformulated gasoline required by § 80.75(a) the total weight percent oxygen and the weight percent oxygen attributable to renewable oxygenate contained in the gasoline, or contained in the RBOB subsequent to oxygenate blending if allowed under paragraph (c) of this section.

(2) Any refiner for each refinery, or any importer, shall submit to the Administrator, with the fourth quarterly report required by § 80.75(a), a report for all reformulated gasoline and RBOB that was produced or imported during the previous calendar year averaging period, that includes the following information:

(i) The total volume of reformulated gasoline and RBOB;

(ii) The compliance total for renewable oxygen;

(iii) The actual total for renewable oxygen;

(iv) The number of renewable oxygen credits generated as a result of actual total renewable oxygen being greater than compliance total renewable oxygen;

(v) The number of renewable oxygen credits required as a result of actual total renewable oxygen being less than compliance total renewable oxygen;

(vi) The number of renewable oxygen credits transferred to another refinery or importer;

(vii) The number of renewable oxygen credits obtained from another refinery or importer; and

(viii) For any renewable oxygen credits that are transferred from or to another refinery or importer, for any such transfer:

(A) The names, EPA-assigned registration numbers and facility identification numbers of the transferor and transferee of the credits;

(B) The number of renewable oxygen credits that were transferred; and

(C) The date of the transaction.

(h) *Renewable oxygenate requirements for reformulated gasoline used in the State of California*. (1) Any refiner or importer of California gasoline, as defined in § 80.81, shall meet the renewable oxygenate standard specified in paragraph (a) of this section for all reformulated gasoline or RBOB used in any reformulated gasoline covered area as specified in § 80.70.

(2) Any California gasoline shall be presumed to be used in a reformulated gasoline covered area:

(i)(A) If the gasoline is produced at a refinery that is located within a reformulated gasoline covered area; or

(B) If the gasoline is transported to a facility that is located within a reformulated gasoline covered area, or to a facility from which gasoline is transported by truck into a reformulated gasoline covered area; unless

(ii) The refiner or importer is able to establish with documentation that the gasoline was used outside any reformulated gasoline covered area.

(3) Any California gasoline shall be considered to be designated as VOC-controlled (for purposes of paragraph

(a)(1) of this section) if the Reid vapor pressure of the gasoline, or RBOB subsequent to oxygenate blending, is intended to meet a standard of:

(i) 7.8 psi or less in the case of gasoline intended for use before March 1, 1996; or

(ii) 7.0 psi or less in the case of gasoline intended for use on or after March 1, 1996.

(i) *Special provisions for shoulder season.* (1) The Governor of any State may petition for an extension of the non-commingling season for any or all reformulated gasoline covered areas within the State pursuant to § 80.70.

(i) Such petition must satisfy the following criteria:

(A) Evidence showing an increase in the market share and/or use of oxygenates which produce commingling-related RVP increases in the area(s) that are covered by the petition;

(B) Evidence demonstrating a pattern of exceedances for the period for which the extension is sought, including ozone monitoring data for the preceding three(3) years of the reformulated gasoline program;

(C) An analysis showing that the pattern of ozone exceedances is likely to continue even with implementation of other ozone air quality control measures and/or programs currently planned by the State; and

(D) Evidence that the responsible State agency or authority has given the public an opportunity for a public hearing and the submission of written comments with respect to the petition.

(ii) Effective data and publication of decision.

(A) If the Administrator determines that the petition meets the requirements of paragraph (i)(1)(i) of this section, to the satisfaction of the Administrator, then EPA shall publish a notice in the FEDERAL REGISTER announcing its intention to establish the non-commingling season as requested by the Governor, and specifying a tentative effective date.

(*1*) The Administrator shall provide the public with an opportunity for a hearing and the submission of written comments.

(*2*) The tentative effective date will correspond with the first day of the next complete non-commingling season beginning not less than one year after receipt of the petition.

(B) If the Administrator receives adverse comments or information demonstrating to the satisfaction of the Administrator that the criteria of paragraph (i)(1)(i) of this section have not been met, that the tentative effective date is not reasonable, or that other good reasons exist to deny the petition, then the Administrator may reject the Governor's request for an extended non-commingling season, in whole or in part, or may delay the effective date by up to two (2) additional years. Absent receipt of such adverse comments or information, EPA shall publish a notice in the FEDERAL REGISTER announcing its approval of the petition and specifying an effective date for the extended non-commingling season.

(2) In the case of any refiner that produces RBOB, or any importer that imports RBOB, the oxygenate that is blended with the RBOB may be included with the refiner's or importer's compliance calculations under paragraph (d) of this section only if:

(i) The oxygenate meets the applicable renewable oxygenate definition under paragraph (a) of this section; and

(ii) In the case of RBOB designated for ''non VOC controlled ether only'' the refiner or importer assumes that ETBE or other oxygenate that does not exhibit volatility-related commingling effects when mixed with other gasolines and approved by the EPA Administrator under subparagraph (a)(3) of this section will be blended with the RBOB and so labels the transfer documentation.

[59 FR 39290, Aug. 2, 1994]

EFFECTIVE DATE NOTE: At 59 FR 39290, Aug. 2, 1994, § 80.83 was added effective September 1, 1994, except for paragraphs (g) and (h), which will not become effective until approval has been given by the Office of Management and Budget. At 59 FR 60715, Nov. 28, 1994, this section was stayed, effective September 13, 1994.

§§ 80.84–80.89 [Reserved]

Subpart E—Anti-Dumping

SOURCE: 59 FR 7860, Feb. 16, 1994, unless otherwise noted.

§ 80.90 Conventional gasoline baseline emissions determination.

(a) *Annual average baseline values.* For any facility of a refiner or importer of conventional gasoline, the annual average baseline values of the facility's exhaust benzene emissions, exhaust toxics emissions, NO_x emissions, sulfur, olefins and T90 shall be determined using the following equation:

$$\text{BASELINE} = \frac{\text{SUMRBASE} \times \text{SUMRVOL} + \text{WNTRBASE} \times \text{WNTRVOL}}{\text{SUMRVOL} + \text{WNTRVOL}}$$

where

BASELINE = annual average baseline value of the facility,

SUMRBASE = summer baseline value of the facility,

SUMRVOL = summer baseline gasoline volume of the facility, per § 80.91,

WNTRBASE = winter baseline value of the facility,

WNTRVOL = winter baseline gasoline volume of the facility, per § 80.91.

(b) *Baseline exhaust benzene emissions—simple model.* (1) Simple model exhaust benzene emissions of conventional gasoline shall be determined using the following equation:

$$\text{EXHBEN} = (1.884 + 0.949 \times \text{BZ} + 0.113 \times (\text{AR} - \text{BZ}))$$

where

EXHBEN = exhaust benzene emissions,

BZ = fuel benzene value in terms of volume percent (per § 80.91), and

AR = fuel aromatics value in terms of volume percent (per § 80.91).

(2) The simple model annual average baseline exhaust benzene emissions for any facility of a refiner or importer of conventional gasoline shall be determined as follows:

(i) The simple model baseline exhaust benzene emissions shall be determined separately for summer and winter using the facility's oxygenated individual baseline fuel parameter values for summer and winter (per § 80.91), respectively, in the equation specified in paragraph (b)(1) of this section.

(ii) The simple model annual average baseline exhaust benzene emissions of the facility shall be determined using the emissions values determined in paragraph (b)(2)(i) of this section in the equation specified in paragraph (a) of this section.

(c) *Baseline exhaust benzene emissions—complex model.* The complex model annual average baseline exhaust benzene emissions for any facility of a refiner or importer of conventional gasoline shall be determined as follows:

(1) The summer and winter complex model baseline exhaust benzene emissions shall be determined separately using the facility's oxygenated individual baseline fuel parameter values for summer and winter (per § 80.91), respectively, in the appropriate complex model for exhaust benzene emissions described in § 80.45.

(2) The complex model annual average baseline exhaust benzene emissions of the facility shall be determined using the emissions values determined in paragraph (c)(1) of this section in the equation specified in paragraph (a) of this section.

(d) *Baseline exhaust toxics emissions.* The annual average baseline exhaust toxics emissions for any facility of a refiner or importer of conventional gasoline shall be determined as follows:

(1) The summer and winter baseline exhaust emissions of benzene, formaldehyde, acetaldehyde, 1,3-butadiene, and polycyclic organic matter shall be determined using the oxygenated individual baseline fuel parameter values for summer and winter (per § 80.91), respectively, in the appropriate complex model for each exhaust toxic (per § 80.45).

(2) The summer and winter baseline total exhaust toxics emissions shall be determined separately by summing the summer and winter baseline exhaust emissions of each toxic (per paragraph (d)(1) of this section), respectively.

(3) The annual average baseline exhaust toxics emissions of the facility shall be determined using the emissions values determined in paragraph (d)(2) of this section in the equation specified in paragraph (a) of this section.

(e) *Baseline NO_X emissions*. The annual average baseline NO_X emissions for any facility of a refiner or importer of conventional gasoline shall be determined as follows:

(1) The summer and winter baseline NO_X emissions shall be determined using the baseline individual baseline fuel parameter values for summer and winter (per § 80.91), respectively, in the appropriate complex model for NO_X (per § 80.45).

(2) The annual average baseline NO_X emissions of the facility shall be determined using the emissions values determined in paragraph (e)(1) of this section in the equation specified in paragraph (a) of this section.

(3) The requirements specified in paragraphs (e) (1) and (2) of this section shall be determined separately using the oxygenated and nonoxygenated individual baseline fuel parameters, per § 80.91.

(f) *Applicability of Phase I and Phase II models*. The requirements of paragraphs (d) and (e) of this section shall be determined separately for the applicable Phase I and Phase II complex models specified in § 80.45.

(g) *Calculation accuracy*. Emissions values calculated per the requirements of this section shall be determined to four (4) significant figures. Sulfur, olefin and T90 values calculated per the requirements of this section shall be determined to the same number of decimal places as the corresponding value listed in § 80.91(c)(5).

[59 FR 7860, Feb. 16, 1994, as amended at 59 FR 36965, July 20, 1994]

§ 80.91 Individual baseline determination.

(a) *Baseline definition*. (1) The ''baseline'' or ''individual baseline'' of a refinery, refiner or importer, as applicable, shall consist of:

(i) An estimate of the quality, composition and volume of its 1990 gasoline, or allowable substitute, based on the requirements specified in §§ 80.91 through 80.93; and

(ii) Its baseline emissions values calculated per paragraph (f) of this section; and

(iii) Its 1990–1993 blendstock-to-gasoline ratios calculated per § 80.102.

(2)(i) The quality and composition of the 1990 gasoline of a refinery, refiner or importer, as applicable, shall be the set of values of the following fuel parameters: benzene content; aromatic content; olefin content; sulfur content; distillation temperature at 50 and 90 percent by volume evaporated; percent evaporated at 200 °F and 300 °F; oxygen content; RVP.

(ii) A refiner, per paragraph (b)(3)(i) of this section, shall also determine the API gravity of its 1990 gasoline.

(3) The methodology outlined in this section shall be followed in determining a baseline value for each fuel parameter listed in paragraph (a)(2) of this section.

(b) *Requirements for refiners, blenders and importers*—(1) *Requirements for producers of gasoline and gasoline blendstocks*. (i) A refinery engaged in the production of gasoline blendstocks from crude oil and/or crude oil derivatives, and the subsequent mixing of those blendstocks to form gasoline, shall have its baseline fuel parameter values determined from Method 1, 2 and/or 3-type data as described in paragraph (c) of this section, provided the refinery was in operation for at least 6 months in 1990.

(ii) A refinery which was in operation for at least 6 months in 1990, was shut down after 1990, and which restarts after June 15, 1994, and for which insufficient 1990 and post-1990 data was collected prior to January 1, 1995 from which to determine an individual baseline, shall have the values listed in paragraph (c)(5) of this section as its individual baseline parameters.

(iii) A refinery which was in operation for less than 6 months in 1990 shall have the values listed in paragraph (c)(5) of this section as its individual baseline parameters.

(2) *Requirements for producers or importers of gasoline blendstocks only*. A refiner or importer of gasoline blendstocks which did not produce or import gasoline in 1990 and which produces or imports post-1994 gasoline shall have the values listed in paragraph (c)(5) of this section as its individual baseline parameters.

(3) *Requirements for purchasers of gasoline and/or gasoline blendstocks*. (i) A refiner or refinery, as applicable, solely engaged in the production of gasoline from gasoline blendstocks and/or gasoline which are simply purchased and blended to form gasoline shall have its individual baseline determined using Method 1-type data (per paragraph (c) of this section) from every batch of 1990 gasoline.

(ii) If Method 1-type data on every batch of the refiner's or refinery's 1990 gasoline does not exist, that refiner or refinery shall have the values listed in paragraph (c)(5) of this section as its individual baseline parameters.

(4) *Requirements for importers of gasoline and/or gasoline blendstocks*. (i) An importer of gasoline shall determine an individual baseline value for each fuel parameter listed in paragraph (a)(2) of this section using Method 1-type data on every batch of gasoline imported by that importer into the United States in 1990.

(ii) An importer which is also a foreign refiner must determine its individual baseline using Method 1, 2 and/or 3-type data (per paragraph (c) of this section) if it imported at least 75 percent, by volume, of the gasoline produced at its foreign refinery in 1990 into the United States in 1990.

(iii) An importer which cannot meet the criteria of paragraphs (b)(4)(i) or (ii) of this section for baseline determination shall have the parameter values listed in paragraph (c)(5) of this section as its individual baseline parameter values.

(5) *Requirements for exporters of gasoline and/or gasoline blendstocks*. A refiner shall not include quality or volume data on its 1990 exports of gasoline blendstocks or gasoline in its baseline determination.

(c) *Data types*—(1) *Method 1-type data*. (i) Method 1-type data shall consist of quality (composition and property data) and volume records of gasoline produced in or shipped from the refinery in 1990, excluding exported gasoline. The measured fuel parameter values and volumes of batches, or shipments if not batch blended, shall be used except that data on produced gasoline which was also shipped shall be included only once.

(ii) Gasoline blendstock which left a facility in 1990 and which could become gasoline solely upon the addition of oxygenate shall be included in the baseline determination.

(A) Fuel parameter values of such blendstock shall be accounted for as if the gasoline blendstock were blended with ten (10.0) volume percent ethanol.

(B) If the refiner or importer can provide evidence that such gasoline blendstock was not blended per paragraph (c)(1)(ii)(A) of this section, and that such gasoline blendstock was blended with another oxygenate or a different volume of ethanol, the fuel parameter values of the final gasoline (including oxygenate) shall be included in the baseline determination.

(C) If the refiner or importer can provide evidence that such gasoline blendstock was not blended per paragraph (c)(1)(ii)(A) or (B) of this section, and that such gasoline blendstock was sold with out further changes downstream, the fuel parameter values of the original product shall be included in the baseline determination.

(iii) Data on 1990 gasoline purchased or otherwise received, including intracompany transfers, shall not be included in the baseline determination of a refiner's or importer's facility if the gasoline exited the receiving refinery unchanged from its arrival state.

(2) *Method 2-type data*. Method 2-type data shall consist of 1990 gasoline blendstock quality data and 1990 blendstock production records, specifically the measured fuel parameter values and volumes of blendstock used in the production of gasoline within the refinery. Blendstock data shall include volumes purchased or otherwise received, including intracompany transfers, if the volumes were blended as part of the refiner's or importer's 1990 gasoline. Henceforth in §§ 80.91 through 80.93, ''blendstock(s)'' or ''gasoline blendstock(s)'' shall include those

products or streams commercially blended to form gasoline.

(3) *Method 3-type data.* (i) Method 3-type data shall consist of post-1990 gasoline blendstock and/or gasoline quality data and 1990 blendstock and gasoline production records, specifically the measured fuel parameter values and volumes of blendstock used in the production of gasoline within the refinery. Blendstock data shall include volumes purchased or otherwise received, including intracompany transfers, if the volumes were blended as part of the refiner's or importer's 1990 gasoline.

(ii) In order to use Method 3-type data, the refiner or importer must do all of the following:

(A) Include a detailed discussion comparing its 1990 and post-1990 refinery operations and all other differences which would cause the 1990 and post-1990 fuel parameter values to differ; and

(B) Perform the appropriate calculations so as to adjust for the differences determined in paragraph (c)(3)(ii)(A) of this section; and

(C) Include a narrative, discussing the methodology and reasoning for the adjustments made per paragraph (c)(3)(ii)(B) of this section.

(iii) In order to use post-1990 gasoline data, either of the following must be shown for each blendstock-type included in 1990 gasoline, excluding butane:

(A) The post-1990 volumetric fraction of a blendstock is within (+/−)10.0 percent of the volumetric fraction of that blendstock in 1990 gasoline. For example, if a 1990 blendstock constituted 30 volume percent of 1990 gasoline, this criterion would be met if the post-1990 volumetric fraction of the blendstock in post-1990 gasoline was 27.0–33.0 volume percent.

(B) The post-1990 volumetric fraction of a blendstock is within (+/−)2.0 volume percent of the absolute value of the 1990 volumetric fraction. For example, if a 1990 blendstock constituted 5 volume percent of 1990 gasoline, this criterion would be met if the post-1990 volumetric fraction of the blendstock in post-1990 gasoline was 3–7 volume percent.

(iv) If using post-1990 gasoline data, post-1990 gasoline blendstock which left a facility and which could become gasoline solely upon the addition of oxygenate shall be included in the baseline determination, per the requirements specified in paragraph (c)(1)(ii) of this section.

(4) *Hierarchy of data use.* (i) A refiner or importer must determine a baseline fuel parameter value using only Method 1-type data if sufficient Method 1-type data is available, per paragraph (d)(1)(ii) of this section.

(ii) If a refiner has insufficient Method 1-type data for a baseline parameter value determination, it must supplement that data with all available Method 2-type data, until it has sufficient data, per paragraph (d)(1)(iii) of this section.

(iii) If a refiner has insufficient Method 1- and Method 2-type data for a baseline parameter value determination, it must supplement that data with all available Method 3-type data, until it has sufficient data, per paragraph (d)(1)(iii) of this section.

(iv) The protocol for the determination of baseline fuel parameter values in paragraphs (c)(4)(i) through (iii) of this section shall be applied to each fuel parameter one at a time.

(5) *Anti-dumping statutory baseline.* (i) The summer anti-dumping statutory baseline shall have the set of fuel parameter values identified as ''summer'' in § 80.45(b)(2). The anti-dumping summer API gravity shall be 57.4 °API.

(ii) The winter anti-dumping statutory baseline shall have the set of fuel parameter values identified as ''winter'' in § 80.45(b)(2), except that winter RVP shall be 8.7 psi. The anti-dumping winter API gravity shall be 60.2 API.

(iii) The annual average anti-dumping statutory baseline shall have the following set of fuel parameter values:

Benzene, volume percent—1.60
Aromatics, volume percent—28.6
Olefins, volume percent—10.8
RVP, psi—8.7
T50, degrees F—207
T90, degrees F—332
E200, percent—46
E300, percent—83
Sulfur, ppm—338
API Gravity, °API—59.1

(iv) The annual average anti-dumping statutory baseline shall have the following set of emission values:

Exhaust benzene emissions, simple model—6.45
Exhaust benzene emissions, complex model—33.03 mg/mile
Exhaust toxics emissions, Phase I—50.67 mg/mile
Exhaust toxics emissions, Phase II—104.5 mg/mile
NO_X emissions, Phase I—714.4 mg/mile
NO_X emissions, Phase II—1461. mg/mile

(d) *Data collection and testing requirements*—(1) *Minimum sampling requirements*—(i) *General requirements.* (A) Data shall have been obtained for at least three months of the refiner's or importer's production of summer gasoline and at least three months of its production of winter gasoline. When method 1 per batch RVP data is available, a month is considered equivalent to 4 weeks of seasonal data.

(*1*) Method 1, per batch, actual RVP data will be used to define that batch as either summer fuel or winter fuel. Summer fuel is defined as fuel produced and intended for sale to satisfy Federal summer volatility standards. When such per batch actual RVP data is not available, data is allocated per month as follows. A summer month is defined as any month during which more than 50 percent (by volume) of the gasoline produced by a refiner met the Federal summer gasoline volatility requirements. Winter shall be any month which could not be considered a summer month under this definition.

(*2*) The three months which compose the summer and the winter data do not have to be consecutive nor within the same year.

(*3*) If, in 1990, a refiner marketed all of its gasoline only in an area or areas which experience no seasonal changes relative to gasoline requirements, e.g., Hawaii, only 3 months of data are required.

(B) Once the minimum sampling requirements have been met, data collection may cease. Additional data may only be included for the remainder of the calendar year in which the minimum sampling requirements were met. In any case, all data collected through the date of collection of the last data point included in the determination of a baseline fuel parameter value must be utilized in the baseline determination of that fuel parameter.

(C) Less than the minimum requirements specified in paragraph (d)(1) of this section may be allowed, upon petition and approval (per § 80.93), if it can be shown that the available data is sufficient in quality and quantity to use in the baseline determination.

(ii) *Method 1 sampling requirements.* At least half of the batches, or shipments if not batch blended, in a calendar month shall have been sampled over a minimum of six months in 1990.

(iii) *Method 2 sampling requirements.* (A) Continuous blendstock streams shall have been sampled at least weekly over a minimum of six months in 1990.

(B) For blendstocks produced on a batch basis, at least half of all batches of a single blendstock type produced in a calendar month shall have been sampled over a minimum of six months in 1990.

(iv) *Method 3 sampling requirements*—(A) *Blendstock data.* (*1*) Post-1990 continuous blendstock streams shall have been sampled at least weekly over a minimum of six months.

(*2*) For post-1990 blendstocks produced on a batch basis, at least half of all batches of a single blendstock type produced in a calendar month shall have been sampled over a minimum of six months.

(B) *Gasoline data.* At least half of the post-1990 batches, or shipments if not batch blended, in a calendar month shall have been sampled over a minimum of six months in order to use post-1990 gasoline data.

(2) *Sampling beyond today's date.* The necessity and actual occurrence of data collection after today's date must be shown.

(3) *Negligible quantity sampling.* Testing of a blendstock stream for a fuel parameter listed in this paragraph (d)(3) is not required if the refiner can show that the fuel parameter exists in the stream at less than or equal to the amount, on average, shown in this paragraph (d)(3) for that fuel parameter. Any fuel parameter shown to exist in a refinery stream in negligible amounts shall be assigned a value of 0.0:

Aromatics, volume percent—1.0
Benzene, volume percent—0.15
Olefins, volume percent—1.0

Oxygen, weight percent—0.2
Sulfur, ppm—30.0

(4) *Sample compositing.* (i) Samples of gasoline or blendstock which have been retained, but not analyzed, may be mixed prior to analysis and analyzed, as described in paragraphs (d)(4)(iii) (A) through (H) of this section, for the required fuel parameters. Samples must be from the same season and year and must be of a single grade or of a single type of batch-produced blendstock.

(ii) Blendstock samples of a single blendstock type obtained from continuous processes over a calendar month may be mixed together in equal volumes to form one blendstock sample and the sample subsequently analyzed for the required fuel parameters.

(iii)(A) Samples shall have been collected and stored per the method normally employed at the refinery in order to prevent change in product composition with regard to baseline properties and to minimize loss of volatile fractions of the sample.

(B) Properties of the retained samples shall be adjusted for loss of butane by comparing the RVP measured right after blending with the RVP determined at the time that the supplemental properties are measured.

(C) The volume of each batch or shipment sampled shall have been noted and the sum of the volumes calculated to the nearest hundred (100) barrels.

(D) For each batch or shipment sampled, the ratio of its volume to the total volume determined in paragraph (d)(4)(iii)(C) of this section shall be determined to three (3) decimal places. This shall be the volumetric fraction of the shipment in the mixture.

(E) The total minimum volume required to perform duplicate analyses to obtain values of all of the required fuel parameters shall be determined.

(F) The volumetric fraction determined in paragraph (d)(4)(iii)(D) of this section for each batch or shipment shall be multiplied by the value determined in paragraph (d)(4)(iii)(E) of this section.

(G) The resulting value determined in paragraph (d)(4)(iii)(F) of this section for each batch or shipment shall be the volume of each batch or shipment's sample to be added to the mixture. This volume shall be determined to the nearest milliliter.

(H) The appropriate volumes of each shipment's sample shall be thoroughly mixed and the solution analyzed per the methods normally employed at the refinery.

(5) *Test methods.* (i) If the test methods used to obtain fuel parameter values of gasoline and gasoline blendstocks differ or are otherwise not equivalent in precision or accuracy to the corresponding test method specified in § 80.46, results obtained under those procedures will only be acceptable, upon petition and approval (per § 80.93), if the procedures are or were industry-accepted procedures for measuring the properties of gasoline and gasoline blendstocks at the time the measurement was made.

(ii) Oxygen content may have been determined analytically or from oxygenate blending records.

(A) The fuel parameter values, other than oxygen content, specified in paragraph (a) of this section, must be established as for any blendstock, per the requirements of this paragraph (d).

(B) All oxygen associated with allowable gasoline oxygenates per § 80.2(jj) shall be included in the determination of the baseline oxygen content, if oxygen content was determined analytically.

(C) Oxygen content shall be assumed to be contributed solely by the oxygenate which is indicated on the blending records, if oxygen content was determined from blending records.

(6) *Data quality.* Data may be excluded from the baseline determination if it is shown to the satisfaction of the Director of the Office of Mobile Sources, or designee, that it is not within the normal range of values expected for the gasoline or blendstock sample, considering unit configuration, operating conditions, etc.; due to:

(i) Improper labeling; or

(ii) Improper testing; or

(iii) Other reasons as verified by the auditor specified in § 80.92.

(e) *Baseline fuel parameter determination*—(1) *Closely integrated gasoline producing facilities.* Each refinery or blending facility must determine a set of baseline fuel parameter values per this paragraph (e). A single set of baseline

fuel parameters may be determined, upon petition and approval, for two or more facilities under either of the following circumstances:

(i) Two or more refineries or sets of gasoline blendstock-producing units of a refiner engaged in the production of gasoline per paragraph (b)(1) of this section which are geographically proximate to each other, yet not within a single refinery gate, and whose 1990 operations were significantly interconnected.

(ii) A gasoline blending facility operating per paragraph (b)(3) of this section received at least 75 percent of its 1990 blendstock volume from a single refinery, or from one or more refineries which are part of an aggregate baseline per §80.101(h). The blending facility and associated refinery(ies) must be owned by the same refiner.

(iii) For facilities determined to be closely integrated gasoline producing facilities and for which EPA has granted a single set of baseline fuel parameter values per this paragraph (e)(1)(i):

(A) All reformulated gasoline and anti-dumping standards shall be met by such closely integrated facilities on an aggregate basis;

(B) A combined facility registration shall be submitted under §§80.76 and 80.103; and

(C) Record keeping requirements under §§80.74 and 80.104 and reporting requirements under §§80.75 and 80.105 shall be met for such closely integrated facilities on an aggregate basis.

(2) *Equations*—(i) *Parameter determinations.* Average baseline fuel parameters shall be determined separately for summer and winter using summer and winter data (per paragraph (d)(1)(i)(A) of this section), respectively, in the applicable equation listed in paragraphs (e)(2) (ii) through (iv) of this section, except that average baseline winter RVP shall be 8.7 psi.

(ii) *Product included in parameter determinations.* In each of the equations listed in paragraphs (e)(2) (ii) through (iv) of this section, the following shall apply:

(A) All gasoline produced to meet EPA's 1990 summertime volatility requirements shall be considered summer gasoline. All other gasoline shall be considered winter gasoline.

(B)(*1*) Baseline total annual 1990 gasoline volume shall be the larger of the total volume of gasoline produced in or shipped from the refinery in 1990.

(*2*) Baseline summer gasoline volume shall be the total volume of low volatility gasoline which met EPA's 1990 summertime volatility requirements. Baseline summer gasoline volume shall be determined on the same basis (produced or shipped) as baseline total annual gasoline volume.

(*3*) Baseline winter gasoline volume shall be the baseline total annual gasoline volume minus the baseline summer gasoline volume.

(C) Fuel parameter values shall be determined in the same units and at least to the same number of decimal places as the corresponding fuel parameter listed in paragraph (c)(5) of this section.

(D) Volumes shall be reported to the nearest barrel or to the degree at which historical records were kept.

(iii) *Method 1.* Summer and winter Method 1-type data, per paragraph (c)(1) of this section, shall be evaluated separately according to the following equation:

$$X_{bs} = \sum_{g=1}^{p_s} \left(\frac{T_{gs}}{n_s} \times \frac{\sum_{i=1}^{n_{gs}} \left(X_{gis} \times V_{gis} \times SG_{gis} \right)}{\sum_{i=1}^{n_{gs}} \left(V_{gis} \times SG_{gis} \right)} \right)$$

where:

X_{bs} = summer or winter baseline value of fuel parameter X for the refinery

s = season, summer or winter, per paragraph (d)(1)(i)(A)(*1*) of this section
g = separate grade of season s gasoline produced by the refinery in 1990
p_s = total number of different grades of season s gasoline produced by the refinery in 1990
T_{gs} = total volume of season s grade g gasoline produced in 1990
N_s = total volume of season s gasoline produced by the refinery in 1990
i = separate batch or shipment of season s 1990 gasoline sampled
n_{gs} = total number of season s samples of grade g gasoline
X_{gis} = parameter value of grade g gasoline sample i in season s
V_{gis} = volume of season s grade g gasoline sample i
SG_{gis} = specific gravity of season s grade g gasoline sample i (used only for fuel parameters measured on a weight basis)

(iv) *Method 2.* Summer and winter Method 2-type data, per paragraph (c)(2) of this section, shall be evaluated separately according to the following equation:

$$X_{bs}^{m_s} = \sum_{j=1}^{T_{js}} \left\{ \frac{}{N_s} \times \left(\frac{\sum_{i=1}^{n_{js}} X_{ijs}}{n_{js}} + \frac{\sum_{i=1}^{p_{js}} \left(X_{ijs} \times V_{ijs} \times SG_{ijs} \right)}{\sum_{i=1}^{p_{js}} \left(V_{ijs} \times SG_{ijs} \right)} \right) \right\}$$

where
X_{bs} = Summer or winter baseline value of fuel parameter × for the refinery
s = season, summer or winter, per paragraph (d)(1)(i)(A)(*1*) of this section
j = type of blendstock (e.g., reformate, isomerate, alkylate, etc.)
m_s = total types of blendstocks in season s 1990 gasoline
T_{js} = total 1990 volume of blendstock j used in the refinery's season s gasoline
N_s = total volume of season s gasoline produced in the refinery in 1990
i = sample of blendstock j
n_{js} = number of samples of season s blendstock j from continuous process streams
X_{ijs} = parameter value of sample i of season s blendstock j
p_{js} = number of samples of season s batch-produced blendstock j
V_{ijs} = volume of batch of sample i of season s blendstock j
SG_{ijs} = specific gravity of sample i of season s blendstock j (used only for fuel parameters measured on a weight basis)

(v) *Method 3.* (A) Post-1990 Blendstock. Summer and winter Method 3-type data, per paragraph (c)(3) of this section, shall be evaluated separately according to the following equation:

$$X_{bs} = \sum_{j=1}^{m_s} \left(\frac{T_{js}}{N_s} \times \left(\frac{\sum_{i=1}^{n_{js}} X_{ijs}}{n_{js}} + \frac{\sum_{i=1}^{p_{js}} \left(X_{ijs} \times V_{ijs} \times SG_{ijs} \right)}{\sum_{i=1}^{p_{js}} \left(V_{ijs} \times SG_{ijs} \right)} \right) \right)$$

where
X_{bs} = Summer or winter baseline value of fuel parameter X for the refinery
s = season, summer or winter, per paragraph (d)(1)(i)(A)(*1*) of this section
j = type of blendstock (e.g., reformate, isomerate, alkylate, etc.)
m_s = total types of blendstocks in season s 1990 gasoline
T_{js} = total 1990 volume of blendstock j used in the refinery's season s gasoline
N_s = total volume of season s gasoline produced in the refinery in 1990
i=sample of post-1990 season s blendstock j

n_{js} = number of samples of post-1990 season s blendstock j from continuous process streams
X_{ijs} = parameter value of sample i of post-1990 season s blendstock j
p_{js} = number of samples of post-1990 season s batch-produced blendstock j
V_{ijs} = volume of post-1990 batch of sample i of season s blendstock j
SG_{ijs} = specific gravity of sample i of season s blendstock j (used only for fuel parameters measured on a weight basis)

(B) Post-1990 gasoline. Summer and winter Method 3-type gasoline data, per paragraph (c)(3) of this section, shall be evaluated separately according tothe following equation:

$$X_{bs} = \sum_{g=1}^{p_s} \left(\frac{T_{gs}}{N_s} \times \frac{\sum_{i=1}^{n_{gs}} \left(X_{gis} \times V_{gis} \times SG_{gis} \right)}{\sum_{i=1}^{n_{gs}} \left(V_{gis} \times SG_{gis} \right)} \right)$$

where:
X_{bs} = Summer or winter baseline value of fuel parameter X for the refinery
s = season, summer or winter, per paragraph (d)(1)(i)(A)(*1*) of this section
g = separate grade of season s gasoline produced by the refinery in 1990
p_s = total number of different grades of season s gasoline produced by the refinery in 1990
T_{gs} = total volume of season s grade g gasoline produced in 1990
N_s = total volume of season s gasoline produced by the refinery in 1990
i = separate batch or shipment of post-1990 season s gasoline sampled
n_{gs} = total number of samples of post-1990 season s grade g gasoline
X_{gis} = parameter value of post-1990 grade g season s gasoline sample i
V_{gis} = volume of post-1990 season s grade g gasoline sample i
SG_{gis} = specific gravity of post-1990 season s grade g gasoline sample i (used only for fuel parameters measured on a weight basis)

(3) *Percent evaporated determination.* (i) Baseline E200 and E300 values shall be determined directly from actual measurement data.

(ii) If the data per paragraph (e)(3)(i) of this section are unavailable, upon petition and approval, baseline E200 and E300 values shall be determined from the following equations using the baseline T50 and T90 values, if the baseline T50 and T90 values are otherwise acceptable:

$$E200 = 147.91 - (0.49 \times T50)$$
$$E300 = 155.47 - (0.22 \times T90)$$

(4) *Oxygen in the baseline.* Baseline fuel parameter values shall be determined on both an oxygenated and non-oxygenated basis.

(i) If baseline values are determined first on an oxygenated basis, per paragraph (e) of this section, the calculations in paragraphs (e)(4)(i) (A) through (C) of this section shall be performed to determine the value of each baseline parameter on a non-oxygenated basis.

(A) Benzene, aromatic, olefin and sulfur content shall be determined on a non-oxygenated basis according to the following equation:

$$UV = [AV/(100 - OV)] \times 100$$

where
UV = non-oxygenated parameter value
AV = oxygenated parameter value
OV = 1990 oxygenate volume as a percent of total production

(B) Reid vapor pressure (RVP) shall be determined on a non-oxygenated basis according to the following equation:

$$UR = \left[BR - \left\{ \sum_{i=1}^{n} \left(OV_i \times OR_i \right) \right\} / 100 \right] \Big/ \left[\left\{ 100 - \sum_{i=1}^{n} OV_i \right\} / 100 \right]$$

where

UR = non-oxygenated RVP (baseline value)
BR = oxygenated RVP
i = type of oxygenate used in 1990
n = total number of different types of oxygenates used in 1990
OV_i = 1990 volume, as a percent of total production, of oxygenate i
OR_i = blending RVP of oxygenate i

(C) Test data and engineering judgement shall be used to estimate T90, T50, E300 and E200 baseline values on a non-oxygenated basis. Allowances shall be made for physical dilution and distillation effects only, and not for refinery operational changes, e.g., decreased reformer severity required due to the octane value of oxygenate which would reduce aromatics.

(ii) If baseline values are determined first on a non-oxygenated basis, the calculations in paragraphs (e)(4)(ii) (A) through (C) of this section shall be performed to determine the value of each baseline parameter on an oxygenated basis.

(A) Benzene, aromatic, olefin and sulfur content shall be determined on an oxygenated basis according to the following equation:

$$AV = UV \times (100 - OV) / 100$$

where

AV = oxygenated parameter value
UV = non-oxygenated parameter value
OV = 1990 oxygenate volume as a percent of total production

(B) Reid vapor pressure (RVP) shall be determined on an oxygenated basis according to the following equation:

$$BR = \left\{ UR \times \left[100 - \sum_{i=1}^{n} (OV_i) \right] + \sum_{i=1}^{n} \left(OV_i \times OR_i \right) \right\} / 100$$

where

BR = oxygenated RVP
UR = non-oxygenated RVP
i = type of oxygenate
n = total number of different types of oxygenates
OV_i = 1990 volume, as a percent of total production, of oxygenate i
OR_i = blending RVP of oxygenate i

(C) Test data and engineering judgement shall be used to estimate T90, T50, E300 and E200 baseline values on an oxygenated basis. Allowances shall be made for physical dilution and distillation effects only, and not for refinery operational changes, e.g., decreased reformer severity required due to the octane value of oxygenate which would reduce aromatics.

(5) *Work-in-progress*. A refiner may, upon petition and approval (per § 80.93), be allowed to account for work- in-progress at one or more of its refineries in 1990 in the determination of that refinery's baseline fuel parameters using Method 1, 2 or 3-type data if it meets the requirements specified in this paragraph (e)(5).

(i) Work-in-progress shall include:

(A) Refinery modification projects involving gasoline blendstock or distillate producing units which were under construction in 1990; or

(B) Refinery modification projects involving gasoline blendstock or distillate producing units which were contracted for prior to or in 1990 such that the refiner was committed to purchasing materials and constructing the project.

(ii) The modifications discussed in paragraph (e)(5)(i) of this section must have been initiated with intent of complying with a legislative or regulatory environmental requirement enacted or promulgated prior to January 1, 1991.

(iii) When comparing emissions or parameter values determined with and without the anticipated work-in-progress adjustment, at least one of the following situations results when comparing annual average baseline values per § 80.90:

(A) A 2.5 percent or greater difference in exhaust benzene emissions (per § 80.90); or

(B) A 2.5 percent or greater difference in total exhaust toxics emissions (per § 80.90(d)); or

(C) A 2.5 percent or greater difference in NO_X emissions (per § 80.90(e)); or

(D) A 10.0 percent or greater difference in sulfur values; or

(E) A 10.0 percent or greater difference in olefin values; or

(F) A 10.0 percent or greater difference in T90 values.

(iv) The requirements of paragraph (e)(5)(iii) of this section shall be determined according to the following equation:

$$\text{Percent Difference} = \frac{|\text{Unadjusted Value} - \text{Adjusted Value}|}{\text{Unadjusted Value}} \times 100$$

(v) The capital involved in the work-in-progress is at least:

(A) 10.0 percent of the refinery's depreciated book value as of the work-in-progress start-up date; or

(B) $10 million.

(vi) Sufficient data shall have been obtained since reliable operation of the work-in-progress was achieved. Such data shall be used in the determination of the baseline value, due to the work-in-progress, of each of the fuel parameters specified in § 80.91(a)(2)(i) and as verification of the effect of the work-in-progress.

(A) The baseline value, due to the work-in-progress, of each of the fuel parameters specified in § 80.91(a)(2)(i) shall be used in the determination of the emissions specified in § 80.90.

(B) The baseline values of sulfur, olefins and E300, due to the work-in-progress, shall be used in the determination of the emissions specified in § 80.41(j)(3).

(vii) The annual average baseline values of exhaust benzene emissions, per § 80.90(b) and § 80.90(c), exhaust toxics emissions, per § 80.90(d), and NO_X emissions, per § 80.90(e), are the values resulting from the work-in-progress baseline adjustment, not to exceed the larger of:

(A) The unadjusted annual average baseline value of each emission specified in this paragraph (e)(5)(vii); or

(B) The following values:

(*1*) Exhaust benzene emissions, simple model, 6.77;

(*2*) Exhaust benzene emissions, complex model, 34.68 mg/mile;

(*3*) Exhaust toxics emissions, 53.20 mg/mile in Phase I, 109.7 mg/mile in Phase II;

(*4*) NO_X emissions, 750.1 mg/mile in Phase I, 1534. mg/mile in Phase II.

(viii) When compliance is achieved using the simple model, per § 80.41 and/or § 80.101, the baseline values of sulfur, olefins and T90 are the values resulting from the work-in-progress baseline adjustment, not to exceed the larger of:

(A) The unadjusted annual average baseline value of each fuel parameter specified in paragraph (e)(5)(viii) of this section; or

(B) The following values:

(*1*) Sulfur, 355 ppm;

(*2*) Olefins, 11.3 volume percent;

(*3*) T90, 349 °F; or

(C) An adjusted annual average baseline fuel parameter value for sulfur, olefins and T90 such that exhaust emissions of VOC, toxics, and NO_X do not exceed the complex model emission levels specified in paragraph (e)(5)(vii)(B) of this section. In the petition for a work-in-progress adjustment, the refiner shall specify sulfur, olefins and T90 values that meet these emission levels.

(ix) All work-in-progress adjustments must be accompanied by:

(A) Unadjusted and adjusted fuel parameters, emissions, and volumes; and

(B) A description of the current status of the work-in-progress (i.e., the refinery modification project) and the date on which normal operations were achieved; and

(C) A narrative describing the situation, the types of calculations, and the reasoning supporting the types of calculations done to determine the adjusted values.

(6) *Baseline adjustment for extenuating circumstances.* (i) Baseline adjustments may be allowed, upon petition and approval (per § 80.93), if a refinery had

downtime of a gasoline blendstock producing unit for 30 days or more in 1990 due to:

(A) Unplanned, unforeseen circumstances; or

(B) Non-annual maintenance (turnaround).

(ii) Fuel parameter and volume adjustments shall be made by assuming that the downtime did not occur in 1990.

(iii) All extenuating circumstance adjustments must be accompanied by:

(A) Unadjusted and adjusted fuel parameters, emissions, and volumes; and

(B) A description of the current status of the extenuating circumstance and the date on which normal operations were achieved; and

(C) A narrative describing the situation, the types of calculations, and the reasoning supporting the types of calculations done to determine the adjusted values.

(7) *Baseline adjustments for 1990 JP–4 production.* (i) Baseline adjustments may be allowed, upon petition and approval (per § 80.93), if a refinery produced JP–4 jet fuel in 1990 and all of the following requirements are also met:

(A) Refinery type.

(*1*) The refinery is the only refinery of a refiner such that it cannot form an aggregate baseline with another refinery (per § 80.101(h)); or

(*2*) The refinery is one refinery of a multi-refinery refiner for which all of the refiner's refineries produced JP–4 in 1990; or

(*3*) The refinery is one refinery of a multi-refinery refiner for which not all of the refiner's refineries produced JP–4 in 1990.

(B) No refinery of a given refiner produces reformulated gasoline. If any refinery of the refiner produces reformulated gasoline at any time in a calendar year, the compliance baselines of all the refiner's refineries receiving a baseline adjustment per this paragraph (e)(7) shall revert to the unadjusted baselines of each respective refinery for that year and all subsequent years.

(C) 1990 JP–4 to gasoline ratio.

(*1*) For a refiner per paragraph (e)(7)(i)(A)(*1*) of this section, the ratio of its refinery's 1990 JP–4 production to its 1990 gasoline production must be greater than or equal to 0.15.

(*2*) For a refiner per paragraph (e)(7)(i)(A)(*2*) of this section, the ratio of each of its refinery's 1990 JP–4 production to its 1990 gasoline production must be greater than or equal to 0.15.

(*3*) For a refiner per paragraph (e)(7)(i)(A)(*3*) of this section, the ratio of the refiner's 1990 JP–4 production to its 1990 gasoline production must be greater than or equal to 0.15, when determined across all of its refineries. Such a refiner must comply with its anti-dumping requirements on an aggregate basis, per § 80.101(h), across all of its refineries.

(ii) Fuel parameter and volume adjustments shall be made by assuming that no JP–4 was produced in 1990.

(iii) All adjustments due to 1990 JP–4 production must be accompanied by:

(A) Unadjusted and adjusted fuel parameters, emissions, and volumes; and

(B) A narrative describing the situation, the types of calculations, and the reasoning supporting the types of calculations done to determine the adjusted values.

(8) Baseline adjustments due to increasing crude sulfur content.

(i) Baseline adjustments may be allowed, upon petition and approval (per § 80.93), if a refinery meets all of the following requirements:

(A) The refinery does not produce reformulated gasoline. If the refinery produces reformulated gasoline at any time in a calendar year, its compliance baseline shall revert to its unadjusted baseline for that year and all subsequent years;

(B) Has an unadjusted baseline sulfur value which is less than or equal to 50 parts per million (ppm);

(C) Is not aggregated with one or more other refineries (per § 80.101(h)). If a refinery which received an adjustment per this paragraph (e)(8) subsequently is included in an aggregate baseline, its compliance baseline shall revert to its unadjusted baseline for that year and all subsequent years;

(D) Can show that installation of the refinery units necessary to process higher sulfur crude oil supplies to comply with the refinery's unadjusted baseline would cost at least $10 million

or be greater than or equal to 10 percent of the depreciated book value of the refinery as of January 1, 1995;

(E) Can show that it could not reasonably or economically obtain crude oil from an alternative source that would permit it to produce conventional gasoline which would comply with its unadjusted baseline;

(F) Has experienced an increase of greater than or equal to 25 percent in the average sulfur content of the crude oil used in the production of gasoline in the refinery since 1990, calculated as follows:

$$\frac{(\mathrm{CSHI} - \mathrm{CS90})}{\mathrm{CS90}} \times 100 = \mathrm{CS\%CHG}$$

where:

CSHI = highest annual average crude sulfur (in ppm), of the crude slates used in the production of gasoline, determined over the years 1991–1994;

CS90 = 1990 annual average crude slate sulfur (in ppm), of the crude slates used in the production of gasoline;

CS%CHG = percent change in average sulfur content of crude slate;

(G) Can show that gasoline sulfur changes are directly and solely attributable to the crude sulfur change, and not due to alterations in refinery operation nor choice of products.

(ii) The adjusted baseline sulfur value shall be the actual baseline sulfur value, in ppm, plus 100 ppm.

(iii) All adjustments made pursuant to this paragraph (e)(8) must be accompanied by:

(A) Unadjusted and adjusted fuel parameters and emissions; and

(B) A narrative describing the situation, the types of calculations, and the reasoning supporting the types of calculations done to determine the adjusted values.

(9) Baseline adjustment for low sulfur and olefins.

(i) Baseline adjustments may be allowed if a refinery meets all of the following requirements:

(A) The unadjusted annual average baseline sulfur value of the refinery is less than or equal to 30 parts per million (ppm);

(B) The unadjusted annual average baseline olefin value of the refinery is less than or equal to 1.0 percent by volume (vol%).

(ii) Adjusted baseline values.

(A) The adjusted baseline shall have an annual average sulfur value of 30 ppm, and an annual average olefin value of 1.0 vol%.

(B) The adjusted baseline shall have a summer sulfur value of 30 ppm, and a summer olefin value of 1.0 vol%.

(C) The adjusted baseline shall have a winter sulfur value of 30 ppm, and a winter olefin value of 1.0 vol%.

(f) *Baseline volume and emissions determination*—(1) *Individual baseline volume*. (i) The individual baseline volume of a refinery described in paragraph (b)(1)(i) of this section shall be the larger of the total gasoline volume produced in or shipped from the refinery in 1990, excluding gasoline blendstocks and exported gasoline, and including the oxygenate volume associated with any product meeting the requirements specified in paragraph (c)(1)(ii) of this section.

(ii) Gasoline brought into the refinery in 1990 which exited the refinery, in 1990, unchanged shall not be included in determining the refinery's baseline volume.

(iii) If a refiner is allowed to adjust its baseline per paragraphs (e)(5) through (e)(7) of this section, its individual baseline volume shall be the volume determined after the adjustment.

(iv) The individual baseline volume for facilities deemed closely integrated, per paragraph (e)(1) of this section, shall be the combined 1990 gasoline production of the facilities, so long as mutual volumes are not double-counted, i.e., volumes of blendstock sent from the refinery to the blending facility should not be included in the blending facility's volume.

(v) The baseline volume of a refiner, per paragraph (b)(3) of this section, shall be the larger of the total gasoline volume produced in or shipped from the refinery in 1990, excluding gasoline blendstocks and exported gasoline.

(vi) The baseline volume of an importer, per paragraph (b)(4) of this section, shall be the total gasoline volume imported into the U.S. in 1990.

(2) *Individual baseline emissions*. (i) Individual annual average baseline emissions (per §80.90) shall be determined

for every refinery, refiner or importer, as applicable.

(ii) If the baseline fuel value for aromatics, olefins, and/or benzene (determined per paragraph (e) of this section) is higher than the high end of the valid range limits specified in § 80.42(c)(1) if compliance is being determined under the Simple Model, or in § 80.45(f)(1)(ii) if compliance is being determined under the Complex Model, then the valid range limits may be extended for conventional gasoline in the following manner:

(A) The new high end of the valid range for aromatics is determined from the following equation:

NAROLIM = AROBASE + 5.0 volume percent

where

NAROLIM = The new high end of the valid range limit for aromatics, in volume percent

AROBASE = The seasonal baseline fuel value for aromatics, in volume percent

(B) The new high end of the valid range for olefins is determined from the following equation:

NOLELIM = OLEBASE + 3.0 volume percent

where

NOLELIM = The new high end of the valid range limit for olefins, in volume percent

OLEBASE = The seasonal baseline fuel value for olefins, in volume percent

(C) The new high end of the valid range for benzene is determined from the following equation:

NBENLIM = BENBASE + 0.5 volume percent

where

NBENLIM = The new high end of the valid range limit for benzene, in volume percent

BENBASE = The seasonal baseline fuel value for benzene, in volume percent

(D) The extension of the valid range is limited to the applicable summer or winter season in which the baseline fuel values for aromatics, olefins, and/or benzene exceed the high end of the valid range as described in paragraph (f)(2)(ii) of this section. Also, the extension of the valid range is limited to use by the refiner whose baseline value for aromatics, olefins, and/or benzene was higher than the valid range limits as described in paragraph (f)(2)(ii) of this section.

(E) Any extension of the Simple Model valid range limits is applicable only to the Simple Model. Likewise any extension of the Complex Model valid range limits is applicable only to the Complex Model.

(F) The valid range extensions calculated in paragraphs (f)(2)(ii)(A), (B), and (C) of this section are applicable to both the baseline fuel and target fuel for the purposes of determining the compliance status of conventional gasolines. The extended valid range limit represents the maximum value for that parameter above which fuels cannot be evaluated with the applicable compliance model.

(G) Under the Simple Model, baseline and compliance calculations shall subscribe to the following limitations:

(*1*) If the aromatics valid range has been extended per paragraph (f)(2)(ii)(A) of this section, an aromatics value equal to the high end of the valid range specified in § 80.42(c)(1) shall be used for the purposes of calculating the exhaust benzene fraction.

(*2*) If the fuel benzene valid range has been extended per paragraph (f)(2)(ii)(C) of this section, a benzene value equal to the high end of the valid range specified in § 80.42(c)(1) shall be used for the purposes of calculating the exhaust benzene fraction.

(H) Under the Complex Model, baseline and compliance calculations shall subscribe to the following limitations:

(*1*) If the aromatics valid range has been extended per paragraph (f)(2)(ii)(A) of this section, an aromatics value equal to the high end of the valid range specified in § 80.45(f)(1)(ii) shall be used for the purposes of calculating emissions performances.

(*2*) If the olefins valid range has been extended per paragraph (f)(2)(ii)(B) of this section, an olefins value equal to the high end of the valid range specified in § 80.45(f)(1)(ii) shall be used for the target fuel for the purposes of calculating emissions performances.

(*3*) If the benzene valid range has been extended per paragraph (f)(2)(ii)(C) of this section, a benzene value equal to the high end of the valid range specified in § 80.45(f)(1)(ii) shall

be used for the target fuel for the purposes of calculating emissions performances.

EDITORIAL NOTE: At 62 FR 68207, Dec. 31, 1997, § 80.91 was amended by adding paragraph (f)(2)(ii); however, (f)(2)(ii) already exists. The recently added subparagraph appears below.

(ii) [Reserved]

(iii) Facilities deemed closely integrated, per paragraph (e)(1) of this section, shall have a single set of annual average individual baseline emissions.

(iv) Aggregate baselines (per § 80.101(h)) must have the NO_X emissions of all refineries in the aggregate determined on the same basis, using either oxygenated or non-oxygenated baseline fuel parameters.

(3) *Geographic considerations requiring individual conventional gasoline compliance baselines.* (i) Anyone may petition EPA to establish separate baselines for refineries located in and providing conventional gasoline to an area with a limited gasoline distribution system if it can show that the area is experiencing increased toxics emissions due to an ozone nonattainment area opting into the reformulated gasoline program pursuant to section 211(k)(6) of the Act.

(ii) If EPA agrees with the finding of paragraph (f)(4)(i) of this section, it shall require that the baselines of such refineries be separate from refineries not located in the area.

(iii) If two (2) or more of a refiner's refineries are located in the geographic area of concern, the refiner may aggregate the baseline emissions and sulfur, olefin and T90 values of the refineries or have an individual baseline for one or more of the refineries, per paragraph (f)(3) of this section.

(4) *Baseline recalculations.* Aggregate baseline exhaust emissions (per § 80.90) and baseline sulfur, olefin and T90 values and aggregate baseline volumes shall be recalculated under the following circumstances:

(i) A refinery included in an aggregate baseline is entirely shutdown. If the shutdown refinery was part of an aggregate baseline, the aggregate baseline emissions, aggregate baseline sulfur, olefin and T90 values and aggregate volume shall be recalculated to account for the removal of the shutdown refinery's contributions to the aggregate baseline.

(ii) A refinery exchanges owners.

(A) All aggregate baselines affected by the exchange shall be recalculated to reflect the addition or subtraction of the baseline exhaust emissions, sulfur, olefin and T90 values and volumes of that refinery.

(B) The new owner may elect to establish an individual baseline for the refinery or to include it in an aggregate baseline.

(C) If the refinery was part of an aggregate of three or more refineries, the remaining refineries in the aggregate from which that refinery was removed will have a new aggregate baseline. If the refinery was part of an aggregate of only two refineries, the remaining refinery will have an individual baseline.

(g) *Inability to meet the requirements of this section.* If a refiner or importer is unable to comply with one or more of the requirements specified in paragraphs (a) through (f) of this section, it may, upon petition and approval, accommodate the lack of compliance in a reasonable, logical, technically sound manner, considering the appropriateness of the alternative. A narrative of the situation, as well as any calculations and results determined, must be documented.

[59 FR 7860, Feb. 16, 1994, as amended at 59 FR 36966, July 20, 1994; 60 FR 6032, Feb. 1, 1995; 60 FR 40008, Aug. 4, 1995; 62 FR 9883, Mar. 4, 1997; 62 FR 68207, Dec. 31, 1997]

EDITORIAL NOTE: At 62 FR 68207, Dec. 31, 1997, § 80.91 was amended by revising paragraph (e)(1)(iii); however, (e)(1)(iii) did not exist in the 1997 edition of this volume.

§ 80.92 Baseline auditor requirements.

(a) *General requirements.* (1) Each refiner or importer is required to have its individual baseline determination methodology, resulting baseline fuel parameter, volume and emissions values, and 1990–1993 blendstock-to-gasoline ratios (per § 80.102) verified by an auditor which meets the requirements described in this section. A refiner or importer which has the anti-dumping statutory baseline as its individual baseline is exempt from this requirement.

(2) An auditor may be an individual or organization, and may utilize contractors and subcontractors to assist in the verification of a baseline.

(3) If an auditor is an organization, one or more persons shall be designated as primary analyst(s). The primary analyst(s) shall meet the requirements described in paragraphs (c) (2) and (3) of this section and shall be responsible for the baseline audit per paragraph (f) of this section.

(b) *Independence*. The auditor, its contractors, subcontractors and their organizations shall be independent of the submitting organization. All of the criteria listed in paragraphs (b) (1) and (2) of this section must be met by every individual involved in substantive aspects of the baseline verification.

(1) *Previous employment criteria*. (i) None of the auditing personnel, including any contractor or subcontractor personnel, involved in the baseline verification for a refiner or importer shall have been employed by the refiner or importer at any time during the three (3) years preceding the date of hire of the auditor by the refiner or importer for baseline verification purposes.

(ii) Auditor personnel may have been a contractor or subcontractor to the refiner or importer, as long as all other criteria listed in this section are met.

(iii) Auditor personnel may also have developed the baseline of the refiner or importer whose baseline they are auditing, but not as an employee (per paragraph (b)(1)(i) of this section). Those involved only in the development of the baseline of the refiner or importer need not meet the requirements specified in this section.

(2) *Financial criteria*. Neither the primary analyst, nor the auditing organization nor any organization or individual which may be contracted or subcontracted to supply baseline verification expertise shall:

(i) Have received more than one quarter of its revenue from the refiner or importer during the year prior to the date of hire of the auditor by the refiner or importer for auditing purposes. Income received from the refiner or importer to develop the baseline being audited is excepted; nor

(ii) Have a total of more than 10 percent of its net worth with the refiner or importer; nor

(iii) Receive compensation for the audit which is dependent on the outcome of the audit.

(c) *Technical ability*. All of the following criteria must be met by the auditor in order to demonstrate its technical capability to perform the baseline audit:

(1) The auditor shall be technically capable of evaluating a baseline determination. It shall have personnel familiar with petroleum refining processes, including associated computational procedures, methods of product analysis and economics, and expertise in conducting the auditing process, including skills for effective data gathering and analysis.

(2) The primary analyst must understand all technical details of the entire baseline audit process.

(3)(i) The primary analyst shall have worked at least five (5) years in either refinery operations or as a consultant for the refining industry.

(ii) If one or more computer models designed for refinery planning and/or economic analysis are used in the verification of an individual baseline, the primary analyst must have at least three (3) years experience working with the model(s) utilized in the verification.

(iii) EPA may, upon petition, waive one or more of the requirements specified in paragraph (c)(3) of this section if the technical capability of the primary analyst is demonstrated to the satisfaction of the Director of the Office of Mobile Sources, or designee.

(d) *Auditor qualification statement*. A statement documenting the qualifications of the auditor, primary analyst(s), contractors, subcontractors and their organizations must be submitted to EPA (Fuel Studies and Standards Branch, Baseline Auditor, U.S. EPA, 2565 Plymouth Rd., Ann Arbor, MI 48105).

(1) *Timing*. (i) The auditor qualification statement may be submitted by the refiner or importer prior to baseline submission (per § 80.93) or by a potential auditor at any time. The auditor will be deemed certified when all

qualifications are met, to the satisfaction of the Director of the Office of Mobile Sources, or designee. If no response is received from EPA within 45 days of application or today's date, whichever is later, the auditor shall be deemed certified.

(ii) The auditor qualification statement may be submitted by the refiner or importer with its baseline submission (per § 80.93). If the auditor does not meet the criteria specified in this section, the baseline submission will not be accepted.

(2) *Content.* The auditor qualification statement must contain all of the following information and may contain additional information which may aid EPA's review of the qualification statement:

(i) The name and address of each person and organization involved in substantive aspects of the baseline audit, including the auditor, primary analyst(s), others within the organization, and contractors and subcontractors;

(ii) The refiners and/or importers for which the auditor, its contractors and subcontractors and their organizations do not meet the independence criteria described in paragraph (b) of this section; and

(iii) The technical qualifications and experience of each person involved in the baseline audit, including a showing that the requirements described in paragraph (c) of this section are met.

(e) *Refiner and importer responsibility.* (1) Each refiner and importer required to have its baseline verified by an auditor (per paragraph (a)(1) of this section) is responsible for utilizing an auditor for baseline verification which meets the requirements specified in paragraphs (b) and (c) of this section.

(2) A refiner's or importer's baseline submission will not be accepted until it has been verified using an auditor which meets the requirements specified in paragraphs (b) and (c) of this section.

(f) *Auditor responsibilities.* (1) The auditor must verify that all baseline submission requirements are fulfilled. This includes, but is not limited to, the following:

(i) Verifying that all data is correctly accounted for;

(ii) Verifying that all calculations are performed correctly;

(iii) Verifying that all adjustments to the data and/or calculations to account for post-1990 data, work-in-progress, and/or extenuating or other circumstances, as allowed per § 80.91, are valid and performed correctly.

(2) The primary analyst shall prepare and sign a statement, to be included in the baseline submission of the refiner or importer, stating that:

(i) He/she has thoroughly reviewed the sampling methodology and baseline calculations; and

(ii) To the best of his/her knowledge, the requirements and intentions of the rulemaking are met in the baseline determination; and

(iii) He/she agrees with the final baseline parameter, volume and emission values listed in the baseline submission.

(3) The auditor may be subject to debarment under U.S.C. 1001 if it displays gross incompetency, intentionally commits an error in the verification process or misrepresents itself or information in the baseline verification.

§ 80.93 Individual baseline submission and approval.

(a) *Submission timing.* (1) Each refiner, blender or importer shall submit two copies of its individual baseline to EPA (Fuel Studies and Standards Branch, Baseline Submission, U.S. EPA, 2565 Plymouth Rd., Ann Arbor, MI 48105) not later than June 1, 1994.

(2) If a refiner must collect data after December 15, 1993 (per § 80.91(d)(2)), it shall submit two copies of its individual baseline to EPA (per § 80.93(a)(1)) by September 1, 1994.

(3)(i) All petitions required for baseline adjustments or methodology deviations will be approved or disapproved by the Director of the Office of Mobile Sources, or designee. All instances where a ''showing'' or other proof is required are also subject to approval by the Director of the Office of Mobile Sources, or designee.

(ii) Petitions, ''showings,'' and other associated proof may be submitted to EPA prior to submittal of the individual baseline (per paragraphs (a)(1)

and (a)(2) of this section). EPA will attempt to review and approve, disapprove or otherwise comment on the petition, etc., prior to the deadline for baseline submittal.

(iii) In the event that EPA does not comment on the petition prior to the deadline for baseline submittal, the refiner or importer must still comply with the applicable baseline submittal deadline.

(iv) Petitions submitted prior to the deadline for baseline submittals shall be submitted to the EPA at the following address: Fuels Studies and Standards Branch, Baseline Petition, U.S. EPA, 2565 Plymouth Road, Ann Arbor, Michigan 48105.

(4) If a baseline recalculation is required per § 80.91(f), documentation and recalculation of all affected baselines shall be submitted to EPA within 30 days of the previous baseline(s) becoming inaccurate due to the circumstances outlined in § 80.91(f).

(b) *Submission content.* (1) Individual baseline submissions shall include, at minimum, the information specified in this paragraph (b).

(i) During its review and evaluation of the baseline submission, EPA may require a refiner or importer to submit additional information in support of the baseline determination.

(ii) Additional information which may assist EPA during its review and evaluation of the baseline may be included at the submitter's discretion.

(2) Administrative information shall include:

(i) Name and business address of the refiner or importer;

(ii) Name, business address and business phone number of the company contact;

(iii) Address and physical location of each refinery, terminal or import facility;

(iv) Address and physical location where documents which are supportive of the baseline determination for each facility are kept;

(3) The chief executive officer statement shall be:

(i) A statement signed by the chief executive officer of the company, or designee, which states that:

(A) The company is complying with the requirements as a refiner, blender or importer, as appropriate;

(B) The data used in the baseline determination is the extent of the data available for the determination of all required baseline fuel parameters;

(C) All calculations and procedures followed per §§ 80.90 through 80.93 have been done correctly;

(D) Proper adjustments have been made to the data or in the calculations, as applicable;

(E) The requirements and intentions of the rulemaking have been met in determining the baseline fuel parameters; and

(F) The baseline fuel parameter values determined for each facility represent that facility's 1990 gasoline to the fullest extent possible.

(ii) A refiner or importer which is permitted to utilize the parameter values specified in § 80.91(c)(5), and does so, shall submit a statement signed by the chief executive officer of the company, or designee, indicating that insufficient data exist for a baseline determination by the types of data allowed for that entity, as specified in § 80.91.

(4) The auditor-related requirements are:

(i) Name, address, telephone number and date of hire of each auditor hired for baseline verification, whether or not the auditor was retained through the baseline approval process.

(ii) Identification of the auditor responsible for the verification. A copy of this auditor's qualification statement, per § 80.92, must be included if the auditor has not been approved by EPA, per § 80.92;

(iii) Indication of the primary analyst(s) involved in each refinery's baseline verification; and

(iv) The signed auditor verification statement, per § 80.92.

(5) The following baseline information for each refinery, refiner or importer, as applicable, shall be provided:

(i) Individual baseline fuel parameter values, on an oxygenated and non-oxygenated basis, and on a summer and winter basis, per § 80.91;

(ii) Individual baseline exhaust emissions shall be shown separately, on a summer, winter and annual average basis (per § 80.90) as follows:

(A) Simple model exhaust benzene emissions;

(B) Complex model exhaust benzene emissions;

(C) Complex model exhaust toxics emissions, for Phase I;

(D) Complex model exhaust NO_X emissions, for Phase I, using oxygenated individual baseline fuel parameters;

(E) Complex model exhaust NO_X emissions, for Phase I, using non-oxygenated individual baseline fuel parameters;

(F) Complex model exhaust toxics emissions, for Phase II;

(G) Complex model exhaust NO_X emissions, for Phase II, using oxygenated individual baseline fuel parameters; and

(H) Complex model exhaust NO_X emissions, for Phase II, using non-oxygenated individual baseline fuel parameters;

(iii) Individual 1990 baseline gasoline volumes, per § 80.91, shall be shown separately on a summer, winter and annual average basis; and

(iv) Blendstock-to-gasoline ratios for each calendar year 1990 through to 1993, per § 80.102.

(6) *Confidential business information.*

(i) Upon approval of an individual baseline, EPA will publish the individual annualized baseline exhaust emissions, on an annual average basis, specified in paragraph (b)(5)(ii) of this section. Such individual baseline exhaust emissions shall not be considered confidential. In addition, the reporting information required under § 80.75(b)(2)(ii) (D), (G) and (J), and § 80.105(a)(4)(i) (E), (H) and (K) shall not be considered confidential.

(ii) Information in the baseline submission which the submitter desires to be considered confidential business information (per 40 CFR part 2, subpart B) must be clearly identified. If no claim of confidentiality accompanies a submission when it is received by EPA, the information may be made available to the public without further notice to the submitter pursuant to the provisions of 40 CFR part 2, subpart B.

(7) Information related to baseline determination as specified in § 80.91 and paragraph (c) of this section.

(c) *Additional baseline submission requirements when Method 1-, 2- and/or 3-type data is utilized.* All requirements of this paragraph shall be reported separately for each facility, unless the facilities are closely integrated, per § 80.91.

(1) *General.* The following information shall be provided:

(i) The number of months in 1990 during which the facility was operating;

(ii) 1990 summer gasoline production volume, per § 80.91, total and by grade, for all gasoline produced but not exported;

(iii) 1990 winter gasoline production volume, per § 80.91, total and by grade, for all gasoline produced, excluding gasoline exported; and

(iv) Whether this facility is actually two facilities which are closely integrated, per § 80.91.

(2) *Baseline values.* The following shall be included for each fuel parameter for which a baseline value is required, per § 80.91:

(i) Narrative of the development of the baseline value of the fuel parameter, including discussion of the sampling and calculation methodologies, technical judgment used, effects of petition results on calculated values, and any additional information which may assist EPA in its review of the baseline;

(ii) Identification of the data-type(s), per § 80.91, used in the determination of a given fuel parameter;

(iii) Identification of test method. If not per § 80.46, include a narrative, explain differences and describing adequacy, per § 80.91;

(iv) Documentation that the minimum sampling requirements per § 80.91 have been met;

(v) Petition and narrative, if needed, for use of less than the minimum required data, per § 80.91;

(vi) Identification of instances of sample compositing per § 80.91;

(vii) Identification of streams for which one or more parameter values were deemed negligible per § 80.91; and

(viii) Discussion of the calculation of oxygenated or non-oxygenated fuel parameter values from non-oxygenated or oxygenated values, respectively, per § 80.91.

(3) *Method 1.* If Method 1-type data is utilized in the baseline determination, the following information on 1990 batches of gasoline, or shipments if not batch blended, are required by grade shall be provided:

(i) First and last sampling dates;

(ii) The following shall be indicated separately on a summer and winter basis, by month:

(A) Number of months sampled;

(B) Number of 1990 batches, or shipments if not batch blended;

(C) Total volume of all batches or shipments;

(D) Number of batches or shipments sampled;

(E) Total volume of all batches or shipments sampled;

(F) Baseline fuel parameter value, per § 80.91; and

(iii) A showing that data was available on every batch of 1990 gasoline, if applicable, per § 80.91 (b)(3) or (b)(4).

(4) *Method 2.* If Method 2-type data is utilized in the baseline determination, the following information on each type of 1990 blendstock used in the refinery's gasoline are required, by blendstock type shall be provided:

(i) First and last sampling dates; and

(ii) The following shall be indicated separately on a summer and winter basis, by month:

(A) Number of months sampled;

(B) Each type of blendstock used in 1990 gasoline and total number of blendstocks. Include all blendstocks produced, purchased or otherwise received which were blended to produce gasoline within the facility. Identify all blendstocks not produced in the facility but used in the facility's 1990 gasoline;

(C) Total volume of each blendstock used in gasoline in 1990;

(D) Identification of blendstock streams as batch or continuous;

(E) Number of blendstock samples from continuous blendstock streams;

(F) Number of blendstock samples from batch processes, including volume of each batch sampled; and

(G) Baseline fuel parameter value, per § 80.91.

(5) *Method 3, blendstock data.* The following information on each type of post-1990 gasoline blendstock used in the refinery's gasoline are required, by blendstock type shall be provided:

(i) First and last sampling dates;

(ii) The following shall be indicated separately on a summer and winter basis, by month:

(A) Number of post-1990 months sampled;

(B) Each type of blendstock used in 1990 gasoline and total number of blendstocks. Include all blendstocks produced, purchased or otherwise received which were blended to produce gasoline within the facility. Identify all blendstocks not produced in the facility but used in the facility's 1990 gasoline;

(C) Total volume of each blendstock used in gasoline in 1990;

(D) Identification of post-1990 blendstock streams as batch or continuous;

(E) Number of post-1990 blendstock samples from continuous blendstock streams;

(F) Number of post-1990 blendstock samples from batch processes, including volume of each batch sampled; and

(G) Baseline fuel parameter value, per § 80.91; and

(iii) Support documentation showing that the criteria of § 80.91 for using Method 3-type blendstock data are met.

(6) *Method 3, post-1990 gasoline data.* The following information on post-1990 batches of gasoline, or shipments if not batch blended, are required by grade:

(i) First and last sampling dates;

(ii) The following shall be indicated separately for summer and winter production, by month:

(A) Number of post-1990 months sampled;

(B) Number of post-1990 batches, or shipments if not batch blended;

(C) Total volume of all post-1990 batches or shipments;

(D) Number of post-1990 batches or shipments sampled;

(E) Volume of each post-1990 batch or shipment sampled; and

(F) Baseline fuel parameter value, per § 80.91; and

(iii) Support documentation showing that the criteria of § 80.91 for using post-1990 gasoline data are met.

(7) *Work-in-progress (WIP).* All of the following must be included in support of a WIP adjustment (per § 80.91(e)(5)):

(i) Petition including identification of the specific baseline emission(s) or parameter for which the WIP adjustment is desired;

(ii) Showing that all WIP criteria, per § 80.91(e)(5), are met;

(iii) Unadjusted and adjusted baseline fuel parameters, emissions and volume for the facility; and

(iv) Narrative, per § 80.91 (e)(5).

(8) *Extenuating circumstances.* All of the following must be included in support of an extenuating circumstance adjustment (per § 80.91 (e)(6) through (e)(7)):

(i) Petition including identification of the allowable circumstance, per § 80.91 (e)(6) through (e)(7);

(ii) Showing that all applicable criteria, per § 80.91 (e)(6) through (e)(7), are met;

(iii) Unadjusted and adjusted baseline fuel parameters, emissions and volume for the facility; and

(iv) Narrative, per § 80.91.

(9) *Other baseline information.* Narrative discussing any aspects of the baseline determination not already indicated per the requirements of paragraph (c)(8) of this section shall be provided.

(10) *Refinery information.* The following information, on a summer or winter basis, shall be provided:

(i) Refinery block flow diagram, showing principal refining units;

(ii) Principal refining unit charge rates and capacities;

(iii) Crude types utilized (names, gravities, and sulfur content) and crude charge rates; and

(iv) Information on the following units, if utilized in the refinery:

(A) Catalytic Cracking Unit: conversion, unit yields, gasoline fuel parameter values (per § 80.91(a)(2));

(B) Hydrocracking Unit: unit yields, gasoline fuel parameter values (per § 80.91(a)(2));

(C) Catalytic Reformer: unit yields, severities;

(D) Bottoms Processing Units (including, but not limited to, coking, extraction and hydrogen processing): gasoline stream yields;

(E) Yield structures for other principal units in the refinery (including but not limited to Alkylation, Polymerization, Isomerization, Etherification, Steam Cracking).

(d) Requirements for petition applicable to Puerto Rico gasoline.

(1) Any refiner or importer with Puerto Rico gasoline, or Puerto Rico and U.S. Virgin Islands gasoline, in its individual baseline may petition EPA to use the summer Complex Model to evaluate its Puerto Rico and Virgin Islands gasoline for compliance under § 80.101.

(2) The petition must be sent to: U.S. EPA, Fuels and Energy Division, 2000 Traverwood, Ann Arbor, MI 48105.

(3) The petition must include the following:

(i) Identification of the refinery;

(ii) Identification of contact person;

(iii) A revised individual baseline determination, wherein the baseline Puerto Rico and U.S. Virgin Islands gasoline has been evaluated using the summer Complex Model. The calculations should be clearly and fully described and displayed.

(iv) Baseline auditor agreement with the revised baseline.

(4) EPA reserves the right to request additional information. If such information is not forthcoming in a timely manner, the petition will not be approved.

[59 FR 7860, Feb. 16, 1994, as amended at 59 FR 36968, July 20, 1994; 60 FR 65575, Dec. 20, 1995; 64 FR 30910, June 9, 1999]

§ 80.94 Requirements for gasoline produced at foreign refineries.

(a) *Definitions.* (1) A *foreign refinery* is a refinery that is located outside the United States, including the Commonwealth of Puerto Rico, the Virgin Islands, Guam, American Samoa, and the Commonwealth of the Northern Mariana Islands (collectively referred to in this section as ''the United States'').

(2) A *foreign refiner* is a person who meets the definition of refiner under § 80.2(i) for foreign refinery.

(3) *FRGAS* means gasoline produced at a foreign refinery that has been assigned an individual refinery baseline and that is imported into the United States.

(4) *Non-FRGAS* means gasoline that is produced at a foreign refinery that has not been assigned an individual refinery baseline, gasoline produced at a foreign refinery with an individual refinery baseline that is not imported into the United States, and gasoline produced at a foreign refinery with an individual baseline during a year when the foreign refiner has opted to not participate in the FRGAS program under paragraph (c)(3) of this section.

(5) *Certified FRGAS* means FRGAS the foreign refiner intends to include in the foreign refinery's NO_X and exhaust toxics compliance calculations under § 80.101(g), and does include in these compliance calculations when reported to EPA.

(6) *Non-certified FRGAS* means FRGAS that is not certified FRGAS.

(b) *Baseline establishment*. Any foreign refiner may submit to EPA a petition for an individual refinery baseline, under §§ 80.90 through 80.93.

(1) The provisions for baselines as specified in §§ 80.90 through 80.93 shall apply to a foreign refinery, except where provided otherwise in this section.

(2) The baseline for a foreign refinery shall reflect only the volume and properties of gasoline produced in 1990 that was imported into the United States.

(3) A baseline petition shall establish the volume of conventional gasoline produced at a foreign refinery and imported into the United States during the calendar year immediately preceding the year the baseline petition is submitted.

(4) In making determinations for foreign refinery baselines EPA will consider all information supplied by a foreign refiner, and in addition may rely on any and all appropriate assumptions necessary to make such a determination.

(5) Where a foreign refiner submits a petition that is incomplete or inadequate to establish an accurate baseline, and the refiner fails to cure this defect after a request for more information, then EPA shall not assign an individual refinery baseline.

(6) Baseline petitions under this paragraph (b) of this section must be submitted before January 1, 2002.

(c) *General requirements for foreign refiners with individual refinery baselines*. Any foreign refiner of a refinery that has been assigned an individual baseline under paragraph (b) of this section shall designate all gasoline produced at the foreign refinery that is exported to the United States as either certified FRGAS or as non-certified FRGAS, except as provided in paragraph (c)(3) of this section.

(1)(i) In the case of certified FRGAS, the foreign refiner shall meet all requirements that apply to refiners under 40 CFR part 80, subparts D, E and F.

(ii) If the foreign refinery baseline is assigned, or a foreign refiner begins early use of a refinery baseline under paragraph (r) of this section, on a date other than January 1, the compliance baseline for the initial year shall be calculated under § 80.101(f) using an adjusted baseline volume, as follows:

$$AV_{1990} = (D/365) \times V_{1990}$$

where:

AV_{1990} = Adjusted 1990 baseline volume

D = Number of days remaining in the year, beginning with the day the foreign refinery baseline is approved or the day the foreign refiner begins early use of a refinery baseline, whichever is later

V_{1990} = Foreign refinery's 1990 baseline volume.

(2) In the case of non-certified FRGAS, the foreign refiner shall meet the following requirements, except the foreign refiner shall substitute the name ''non-certified FRGAS'' for the names ''reformulated gasoline'' or ''RBOB'' wherever they appear in the following requirements:

(i) The designation requirements in § 80.65(d)(1);

(ii) The recordkeeping requirements in § 80.74 (a), and (b)(3);

(iii) The reporting requirements in § 80.75 (a), (m), and (n);

(iv) The registration requirements in § 80.76;

(v) The product transfer document requirements in § 80.77 (a) through (f), and (j);

(vi) The prohibition in § 80.78(a)(10), (b) and (c); and

(vii) The independent audit requirements in §§ 80.125 through 80.127, 80.128 (a) through (c), and (g) through (i), and 80.130.

(3)(i) Any foreign refiner that has been assigned an individual baseline for a foreign refinery under paragraph (b) of this section may elect to classify no gasoline imported into the United States as FRGAS, provided the foreign refiner notifies EPA of the election no later than November 1 of the prior calendar year.

(ii) An election under paragraph (c)(3)(i) of this section shall:

(A) Be for an entire calendar year averaging period and apply to all gasoline produced during the calendar year at the foreign refinery that is imported into the United States; and

(B) Remain in effect for each succeeding calendar year averaging period, unless and until the foreign refiner notifies EPA of a termination of the election. The change in election shall take effect at the beginning of the next calendar year.

(iii) A foreign refiner who has aggregated refineries under § 80.101(h) shall make the same election under paragraph (c)(3)(i) of this section for all refineries in the aggregation.

(d) *Designation, product transfer documents, and foreign refiner certification.* (1) Any foreign refiner of a foreign refinery that has been assigned an individual baseline shall designate each batch of FRGAS as such at the time the gasoline is produced, unless the foreign refiner has elected to classify no gasoline exported to the United States as FRGAS under paragraph (c)(3)(i) of this section.

(2) On each occasion when any person transfers custody or title to any FRGAS prior to its being imported into the United States, the following information shall be included as part of the product transfer document information in §§ 80.77 and 80.106:

(i) Identification of the gasoline as certified FRGAS or as non-certified FRGAS; and

(ii) The name and EPA refinery registration number of the refinery where the FRGAS was produced.

(3) On each occasion when FRGAS is loaded onto a vessel or other transportation mode for transport to the United States, the foreign refiner shall prepare a certification for each batch of the FRGAS that meets the following requirements:

(i) The certification shall include the report of the independent third party under paragraph (f) of this section, and the following additional information:

(A) The name and EPA registration number of the refinery that produced the FRGAS;

(B) The identification of the gasoline as certified FRGAS or non-certified FRGAS;

(C) The volume of FRGAS being transported, in gallons;

(D) A declaration that the FRGAS is being included in the compliance baseline calculations under § 80.101(f) for the refinery that produced the FRGAS; and

(E) In the case of certified FRGAS:

(*1*) The values for each parameter required to calculate NO_X and exhaust toxics emissions performance as determined under paragraph (f) of this section; and

(*2*) A declaration that the FRGAS is being included in the compliance calculations under § 80.101(g) for the refinery that produced the FRGAS.

(ii) The certification shall be made part of the product transfer documents for the FRGAS.

(e) *Transfers of FRGAS to non-United States markets.* The foreign refiner is responsible to ensure that all gasoline classified as FRGAS is imported into the United States. A foreign refiner may remove the FRGAS classification, and the gasoline need not be imported into the United States, but only if:

(1)(i) The foreign refiner excludes:

(A) The volume of gasoline from the refinery's compliance baseline calculations under § 80.101(h); and

(B) In the case of certified FRGAS, the volume and parameter values of the gasoline from the compliance calculations under § 80.101(g);

(ii) The exclusions under paragraph (e)(1)(i) of this section shall be on the basis of the parameter and volumes determined under paragraph (f) of this section; and

(2) The foreign refiner obtains sufficient evidence in the form of documentation that the gasoline was not imported into the United States.

(f) *Load port independent sampling, testing and refinery identification.* (1) On each occasion FRGAS is loaded onto a vessel for transport to the United

States a foreign refiner shall have an independent third party:

(i) Inspect the vessel prior to loading and determine the volume of any tank bottoms;

(ii) Determine the volume of FRGAS loaded onto the vessel (exclusive of any tank bottoms present before vessel loading);

(iii) Obtain the EPA-assigned registration number of the foreign refinery;

(iv) Determine the name and country of registration of the vessel used to transport the FRGAS to the United States; and

(v) Determine the date and time the vessel departs the port serving the foreign refinery.

(2) On each occasion certified FRGAS is loaded onto a vessel for transport to the United States a foreign refiner shall have an independent third party:

(i) Collect a representative sample of the certified FRGAS from each vessel compartment subsequent to loading on the vessel and prior to departure of the vessel from the port serving the foreign refinery;

(ii) Prepare a volume-weighted vessel composite sample from the compartment samples, and determine the values for sulfur, benzene, gravity, E200 and E300 using the methodologies specified in § 80.46, by:

(A) The third party analyzing the sample; or

(B) The third party observing the foreign refiner analyze the sample;

(iii) Determine the values for aromatics, olefins, RVP and each oxygenate specified in § 80.65(e)(2) for the gasoline loaded onto the vessel, by:

(A) Completing the analysis procedures under paragraph (f)(2)(ii) of this section for the additional parameters; or

(B) Obtaining from the foreign refiner the test results of samples collected from each shore tank containing gasoline that was loaded onto the vessel, and calculating the parameter values for the gasoline loaded onto the vessel from the tank parameter values and the gasoline volume from each such shore tank that was loaded;

(iv) Review original documents that reflect movement and storage of the certified FRGAS from the refinery to the load port, and from this review determine:

(A) The refinery at which the FRGAS was produced; and

(B) That the FRGAS remained segregated from:

(*1*) Non-FRGAS and non-certified FRGAS; and

(*2*) Other certified FRGAS produced at a different refinery, except that certified FRGAS may be combined with other certified FRGAS produced at refineries that are aggregated under § 80.101(h);

(3) The independent third party shall submit a report:

(i) To the foreign refiner containing the information required under paragraphs (f) (1) and (2) of this section, to accompany the product transfer documents for the vessel; and

(ii) To the Administrator containing the information required under paragraphs (f) (1) and (2) of this section, within thirty days following the date of the independent third party's inspection. This report shall include a description of the method used to determine the identity of the refinery at which the gasoline was produced, that the gasoline remained segregated as specified in paragraph (n)(1) of this section, and a description of the gasoline's movement and storage between production at the source refinery and vessel loading.

(4) A person may be used to meet the third party requirements in this paragraph (f) only if:

(i) The person is approved in advance by EPA, based on a demonstration of ability to perform the procedures required in this paragraph (f);

(ii) The person is independent under the criteria specified in § 80.65(f)(2)(iii); and

(iii) The person signs a commitment that contains the provisions specified in paragraph (i) of this section with regard to activities, facilities and documents relevant to compliance with the requirements of this paragraph (f).

(g) *Comparison of load port and port of entry testing.* (1)(i) Any foreign refiner and any United States importer of certified FRGAS shall compare the results from the load port testing under paragraph (f) of this section, with the port

of entry testing as reported under paragraph (o) of this section, for the volume of gasoline, for the parameter values for sulfur, benzene, gravity, E200 and E300, and for the NO_X and exhaust toxics emissions performance; except that

(ii) Where a vessel transporting certified FRGAS off loads this gasoline at more than one United States port of entry, and the conditions of paragraph (g)(2)(i) of this section are not met at the first United States port of entry, the requirements of paragraph (g)(1) and (g)(2) of this section do not apply at subsequent ports of entry if the United States importer obtains a certification from the vessel owner or his immediate designee that the vessel has not loaded any gasoline or blendstock between the first United States port of entry and the subsequent port of entry.

(2)(i) The requirements of paragraph (g)(2)(ii) apply if:

(A)(*1*) The temperature-corrected volumes determined at the port of entry and at the load port differ by more than one percent; or

(*2*) For any parameter specified in paragraph (f)(2)(ii) of this section, the values determined at the port of entry and at the load port differ by more than the reproducibility amount specified for the port of entry test result by the American Society of Testing and Materials (ASTM); unless

(B) The NO_X and exhaust toxics emissions performance, in grams per mile, calculated using the port of entry test results, are each equal to or less than the NO_X and exhaust toxics emissions performance calculated using the load port test results;

(ii) The United States importer and the foreign refiner shall treat the gasoline as non-certified FRGAS, and the foreign refiner shall:

(A) Exclude the gasoline volume and properties from its conventional gasoline NO_X and exhaust toxics compliance calculations under §80.101(g); and

(B) Include the gasoline volume in its compliance baseline calculation under §80.101(f), unless the foreign refiner establishes that the United States importer classified the gasoline only as conventional gasoline and not as reformulated gasoline.

(h) *Attest requirements.* The following additional procedures shall be carried out by any foreign refiner of FRGAS as part of the attest engagement for each foreign refinery under 40 CFR part 80, subpart F.

(1) Include in the inventory reconciliation analysis under §80.128(b) and the tender analysis under §80.128(c) non-FRGAS in addition to the gasoline types listed in §80.128 (b) and (c).

(2) Obtain separate listings of all tenders of certified FRGAS, and of non-certified FRGAS. Agree the total volume of tenders from the listings to the gasoline inventory reconciliation analysis in §80.128(b), and to the volumes determined by the third party under paragraph (f)(1) of this section.

(3) For each tender under paragraph (h)(2) of this section where the gasoline is loaded onto a marine vessel, report as a finding the name and country of registration of each vessel, and the volumes of FRGAS loaded onto each vessel.

(4) Select a sample from the list of vessels identified in paragraph (h)(3) of this section used to transport certified FRGAS, in accordance with the guidelines in §80.127, and for each vessel selected perform the following:

(i) Obtain the report of the independent third party, under paragraph (f) of this section, and of the United States importer under paragraph (o) of this section.

(A) Agree the information in these reports with regard to vessel identification, gasoline volumes and test results.

(B) Identify, and report as a finding, each occasion the load port and port of entry parameter and volume results differ by more than the amounts allowed in paragraph (g) of this section, and determine whether the foreign refiner adjusted its refinery calculations as required in paragraph (g) of this section.

(ii) Obtain the documents used by the independent third party to determine transportation and storage of the certified FRGAS from the refinery to the load port, under paragraph (f) of this section. Obtain tank activity records for any storage tank where the certified FRGAS is stored, and pipeline activity records for any pipeline used to transport the certified FRGAS, prior

to being loaded onto the vessel. Use these records to determine whether the certified FRGAS was produced at the refinery that is the subject of the attest engagement, and whether the certified FRGAS was mixed with any non-certified FRGAS, non-FRGAS, or any certified FRGAS produced at a different refinery that was not aggregated under § 80.101(h).

(5)(i) Select a sample from the list of vessels identified in paragraph (h)(3) of this section used to transport certified and non-certified FRGAS, in accordance with the guidelines in § 80.127, and for each vessel selected perform the following:

(ii) Obtain a commercial document of general circulation that lists vessel arrivals and departures, and that includes the port and date of departure of the vessel, and the port of entry and date of arrival of the vessel. Agree the vessel's departure and arrival locations and dates from the independent third party and United States importer reports to the information contained in the commercial document.

(6) Obtain separate listings of all tenders of non-FRGAS, and perform the following:

(i) Agree the total volume of tenders from the listings to the gasoline inventory reconciliation analysis in § 80.128(b).

(ii) Obtain a separate listing of the tenders under paragraph (h)(6) of this section where the gasoline is loaded onto a marine vessel. Select a sample from this listing in accordance with the guidelines in § 80.127, and obtain a commercial document of general circulation that lists vessel arrivals and departures, and that includes the port and date of departure and the ports and dates where the gasoline was off loaded for the selected vessels. Determine and report as a finding the country where the gasoline was off loaded for each vessel selected.

(7) In order to complete the requirements of this paragraph (h) an auditor shall:

(i) Be independent of the foreign refiner;

(ii) Be licensed as a Certified Public Accountant in the United States and a citizen of the United States, or be approved in advance by EPA based on a demonstration of ability to perform the procedures required in §§ 80.125 through 80.130 and this paragraph (h); and

(iii) Sign a commitment that contains the provisions specified in paragraph (i) of this section with regard to activities and documents relevant to compliance with the requirements of §§ 80.125 through 80.130 and this paragraph (h).

(i) *Foreign refiner commitments.* Any foreign refiner shall commit to and comply with the provisions contained in this paragraph (i) as a condition to being assigned an individual refinery baseline.

(1) Any United States Environmental Protection Agency inspector or auditor will be given full, complete and immediate access to conduct inspections and audits of the foreign refinery.

(i) Inspections and audits may be either announced in advance by EPA, or unannounced.

(ii) Access will be provided to any location where:

(A) Gasoline is produced;

(B) Documents related to refinery operations are kept;

(C) Gasoline or blendstock samples are tested or stored; and

(D) FRGAS is stored or transported between the foreign refinery and the United States, including storage tanks, vessels and pipelines.

(iii) Inspections and audits may be by EPA employees or contractors to EPA.

(iv) Any documents requested that are related to matters covered by inspections and audits will be provided to an EPA inspector or auditor on request.

(v) Inspections and audits by EPA may include review and copying of any documents related to:

(A) Refinery baseline establishment, including the volume and parameters, and transfers of title or custody, of any gasoline or blendstocks, whether FRGAS or non-FRGAS, produced at the foreign refinery during the period January 1, 1990 through the date of the refinery baseline petition or through the date of the inspection or audit if a baseline petition has not been approved, and any work papers related to refinery baseline establishment;

(B) The parameters and volume of FRGAS;

(C) The proper classification of gasoline as being FRGAS or as not being FRGAS, or as certified FRGAS or as non-certified FRGAS;

(D) Transfers of title or custody to FRGAS;

(E) Sampling and testing of FRGAS;

(F) Work performed and reports prepared by independent third parties and by independent auditors under the requirements of this section, including work papers; and

(G) Reports prepared for submission to EPA, and any work papers related to such reports.

(vi) Inspections and audits by EPA may include taking samples of gasoline or blendstock, and interviewing employees.

(vii) Any employee of the foreign refiner will be made available for interview by the EPA inspector or auditor, on request, within a reasonable time period.

(viii) English language translations of any documents will be provided to an EPA inspector or auditor, on request, within 10 working days.

(ix) English language interpreters will be provided to accompany EPA inspectors and auditors, on request.

(2) An agent for service of process located in the District of Columbia will be named, and service on this agent constitutes service on the foreign refiner or any officer, or employee of the foreign refiner for any action by EPA or otherwise by the United States related to the requirements of 40 CFR part 80, subparts D, E and F.

(3) The forum for any civil or criminal enforcement action related to the provisions of this section for violations of the Clean Air Act or regulations promulgated thereunder shall be governed by the Clean Air Act, including the EPA administrative forum where allowed under the Clean Air Act.

(4) United States substantive and procedural laws shall apply to any civil or criminal enforcement action against the foreign refiner or any employee of the foreign refiner related to the provisions of this section.

(5) Submitting a petition for an individual refinery baseline, producing and exporting gasoline under an individual refinery baseline, and all other actions to comply with the requirements of 40 CFR part 80, subparts D, E and F relating to the establishment and use of an individual refinery baseline constitute actions or activities covered by and within the meaning of 28 U.S.C. 1605(a)(2), but solely with respect to actions instituted against the foreign refiner, its agents, officers, and employees in any court or other tribunal in the United States for conduct that violates the requirements applicable to the foreign refiner under 40 CFR part 80, subparts D, E and F, including such conduct that violates Title 18 U.S.C. section 1001, Clean Air Act section 113(c)(2), or other applicable provisions of the Clean Air Act.

(6) The foreign refiner, or its agents, officers, or employees, will not seek to detain or to impose civil or criminal remedies against EPA inspectors or auditors, whether EPA employees or EPA contractors, for actions performed within the scope of EPA employment related to the provisions of this section.

(7) The commitment required by this paragraph (i) shall be signed by the owner or president of the foreign refiner business.

(8) In any case where FRGAS produced at a foreign refinery is stored or transported by another company between the refinery and the vessel that transports the FRGAS to the United States, the foreign refiner shall obtain from each such other company a commitment that meets the requirements specified in paragraphs (i) (1) through (7) of this section, and these commitments shall be included in the foreign refiner's baseline petition.

(j) *Sovereign immunity*. By submitting a petition for an individual foreign refinery baseline under this section, or by producing and exporting gasoline to the United States under an individual refinery baseline under this section, the foreign refiner, its agents, officers, and employees, without exception, become subject to the full operation of the administrative and judicial enforcement powers and provisions of the United States without limitation based on sovereign immunity, with respect to actions instituted against the foreign

refiner, its agents, officers, and employees in any court or other tribunal in the United States for conduct that violates the requirements applicable to the foreign refiner under 40 CFR part 80, subparts D, E and F, including such conduct that violates Title 18 U.S.C. section 1001, Clean Air Act section 113(c)(2), or other applicable provisions of the Clean Air Act.

(k) *Bond posting.* Any foreign refiner shall meet the requirements of this paragraph (k) as a condition to being assigned an individual refinery baseline.

(1) The foreign refiner shall post a bond of the amount calculated using the following equation:

$$\text{Bond} = G \times \$0.01$$

where:

Bond = amount of the bond in U.S. dollars

G = the largest volume of conventional gasoline produced at the foreign refinery and exported to the United States, in gallons, during a single calendar year among the most recent of the following calendar years, up to a maximum of five calendar years: the calendar year immediately preceding the date the baseline petition is submitted, the calendar year the baseline petition is submitted, and each succeeding calendar year

(2) Bonds shall be posted by:

(i) Paying the amount of the bond to the Treasurer of the United States;

(ii) Obtaining a bond in the proper amount from a third party surety agent that is payable to satisfy United States judicial judgments against the foreign refiner, provided EPA agrees in advance as to the third party and the nature of the surety agreement; or

(iii) An alternative commitment that results in assets of an appropriate liquidity and value being readily available to the United States, provided EPA agrees in advance as to the alternative commitment.

(3) If the bond amount for a foreign refinery increases the foreign refiner shall increase the bond to cover the shortfall within 90 days of the date the bond amount changes. If the bond amount decreases, the foreign refiner may reduce the amount of the bond beginning 90 days after the date the bond amount changes.

(4) Bonds posted under this paragraph (k) shall be used to satisfy any judicial judgment that results from an administrative or judicial enforcement action for conduct in violation of 40 CFR part 80, subparts D, E and F, including such conduct that violates Title 18 U.S.C. section 1001, Clean Air Act section 113(c)(2), or other applicable provisions of the Clean Air Act.

(5) On any occasion a foreign refiner bond is used to satisfy any judgment, the foreign refiner shall increase the bond to cover the amount used within 90 days of the date the bond is used.

(l) *Blendstock tracking.* For purposes of blendstock tracking by any foreign refiner under § 80.102 by a foreign refiner with an individual refinery baseline, the foreign refiner may exclude from the calculations required in § 80.102(d) the volume of applicable blendstocks for which the foreign refiner has sufficient evidence in the form of documentation that the blendstocks were used to produce gasoline used outside the United States.

(m) *English language reports.* Any report or other document submitted to EPA by any foreign refiner shall be in the English language, or shall include an English language translation.

(n) *Prohibitions.* (1) No person may combine certified FRGAS with any non-certified FRGAS or non-FRGAS, and no person may combine certified FRGAS with any certified FRGAS produced at a different refinery that is not aggregated under § 80.101(h), except as provided in paragraph (e) of this section.

(2) No foreign refiner or other person may cause another person to commit an action prohibited in paragraph (n)(1) of this section, or that otherwise violates the requirements of this section.

(o) *United States importer requirements.* Any United States importer shall meet the following requirements.

(1) Each batch of imported gasoline shall be classified by the importer as being FRGAS or as non-FRGAS, and each batch classified as FRGAS shall be further classified as certified FRGAS or as non-certified FRGAS.

(2) Gasoline shall be classified as certified FRGAS or as non-certified FRGAS according to the designation by the foreign refiner if this designation is supported by product transfer

documents prepared by the foreign refiner as required in paragraph (d) of this section, unless the gasoline is classified as non-certified FRGAS under paragraph (g) of this section.

(3) For each gasoline batch classified as FRGAS, any United States importer shall perform the following procedures.

(i) In the case of both certified and non-certified FRGAS, have an independent third party:

(A) Determine the volume of gasoline in the vessel;

(B) Use the foreign refiner's FRGAS certification to determine the name and EPA-assigned registration number of the foreign refinery that produced the FRGAS;

(C) Determine the name and country of registration of the vessel used to transport the FRGAS to the United States; and

(D) Determine the date and time the vessel arrives at the United States port of entry.

(ii) In the case of certified FRGAS, have an independent third party:

(A) Collect a representative sample from each vessel compartment subsequent to the vessel's arrival at the United States port of entry and prior to off loading any gasoline from the vessel;

(B) Prepare a volume-weighted vessel composite sample from the compartment samples; and

(C) Determine the values for sulfur, benzene, gravity, E200 and E300 using the methodologies specified in § 80.46, by:

(*1*) The third party analyzing the sample; or

(*2*) The third party observing the importer analyze the sample

(4) Any importer shall submit reports within thirty days following the date any vessel transporting FRGAS arrives at the United States port of entry:

(i) To the Administrator containing the information determined under paragraph (o)(3) of this section; and

(ii) To the foreign refiner containing the information determined under paragraph (o)(3)(ii) of this section.

(5)(i) Any United States importer shall meet the requirements specified for conventional gasoline in § 80.101 for any imported conventional gasoline that is not classified as certified FRGAS under paragraph (o)(2) of this section.

(ii) The baseline applicable to a United States importer who has not been assigned an individual importer baseline under § 80.91(b)(4) shall be the baseline specified in paragraph (p) of this section.

(p) *Importer Baseline.* (1) Each calendar year starting in 2000, the Administrator shall calculate the volume weighted average NO_X emissions of imported conventional gasoline for a multi-year period (MYA_{NOx}). This calculation:

(i) Shall use the Phase II Complex Model;

(ii) Shall include all conventional gasoline in the following categories:

(A) Imported conventional gasoline that is classified as conventional gasoline, and included in the conventional gasoline compliance calculations of importers for each year; and

(B) Imported conventional gasoline that is classified as certified FRGAS, and included in the conventional gasoline compliance calculations of foreign refiners for each year;

(iii)(A) In 2000 only, shall be for the 1998 and 1999 averaging periods and also shall include all conventional gasoline classified as FRGAS and included in the conventional gasoline compliance calculations of a foreign refiner for 1997, and all conventional gasoline batches not classified as FRGAS that are imported during 1997 beginning on the date the first batch of FRGAS arrives at a United States port of entry; and

(B) Starting in 2001, shall include imported conventional gasoline during the prior three calendar year averaging periods.

(2)(i) If the volume-weighted average NO_X emissions (MYA_{NOx}), calculated in paragraph (p)(1) of this section, is greater than 1,465 mg/mile, the Administrator shall calculate an adjusted baseline for NO_X according to the following equation:

$$AB_{NOx} = 1{,}465 \text{ mg/mile} - (MYA_{NOx} - 1{,}465 \text{ mg/mile})$$

where:

AB_{NOx} = Adjusted NO_X baseline, in mg/mile

MYA_{NOx} = Multi-year average NO_X emissions, in mg/mile

(ii) For the 1998 and 1999 multi-year averaging period only the value of AB_{NOx} shall not be larger than 1,480 mg/mile regardless of the calculation under paragraph (p)(2)(i) of this section.

(3)(i) Notwithstanding the provisions of § 80.91(b)(4)(iii), the baseline NO_X emissions values applicable to any United States importer who has not been assigned an individual importer baseline under § 80.91(b)(4) shall be the more stringent of the statutory baseline value for NO_X under § 80.91(c)(5), or the adjusted NO_X baseline calculated in paragraph (p)(2) of this section.

(ii) On or before June 1 of each calendar year, the Administrator shall announce the NO_X baseline that applies to importers under this paragraph (p). If the baseline is an adjusted baseline, it shall be effective for any conventional gasoline imported beginning 60 days following the Administrator's announcement. If the baseline is the statutory baseline, it shall be effective upon announcement. A baseline shall remain in effect until the effective date of a subsequent change to the baseline pursuant to this paragraph (p).

(q) *Withdrawal or suspension of a foreign refinery's baseline.* EPA may withdraw or suspend a baseline that has been assigned to a foreign refinery where:

(1) A foreign refiner fails to meet any requirement of this section;

(2) A foreign government fails to allow EPA inspections as provided in paragraph (i)(1) of this section;

(3) A foreign refiner asserts a claim of, or a right to claim, sovereign immunity in an action to enforce the requirements in 40 CFR part 80, subparts D, E and F; or

(4) A foreign refiner fails to pay a civil or criminal penalty that is not satisfied using the foreign refiner bond specified in paragraph (k) of this section.

(r) *Early use of a foreign refinery baseline.* (1) A foreign refiner may begin using an individual refinery baseline before EPA has approved the baseline, provided that:

(i) A baseline petition has been submitted as required in paragraph (b) of this section;

(ii) EPA has made a provisional finding that the baseline petition is complete;

(iii) The foreign refiner has made the commitments required in paragraph (i) of this section;

(iv) The persons who will meet the independent third party and independent attest requirements for the foreign refinery have made the commitments required in paragraphs (f)(3)(iii) and (h)(7)(iii) of this section; and

(v) The foreign refiner has met the bond requirements of paragraph (k) of this section.

(2) In any case where a foreign refiner uses an individual refinery baseline before final approval under paragraph (r)(1) of this section, and the foreign refinery baseline values that ultimately are approved by EPA are more stringent than the early baseline values used by the foreign refiner, the foreign refiner shall recalculate its compliance, *ab initio,* using the baseline values approved by EPA, and the foreign refiner shall be liable for any resulting violation of the conventional gasoline requirements.

(s) *Additional requirements for petitions, reports and certificates.* Any petition for a refinery baseline under paragraph (b) of this section, any report or other submission required by paragraphs (c), (f)(2), or (i) of this section, and any certification under paragraph (d)(3) or (g)(1)(ii) of this section shall be:

(1) Submitted in accordance with procedures specified by the Administrator, including use of any forms that may specified by the Administrator.

(2) Be signed by the president or owner of the foreign refiner company, or in the case of (g)(1)(ii) the vessel owner, or by that person's immediate designee, and shall contain the following declaration:

I hereby certify: (1) that I have actual authority to sign on behalf of and to bind [insert name of foreign refiner or vessel owner] with regard to all statements contained herein; (2) that I am aware that the information contained herein is being certified, or submitted to the United States Environmental Protection Agency, under the requirements of 40 CFR part 80, subparts D, E and F and that the information is material

for determining compliance under these regulations; and (3) that I have read and understand the information being certified or submitted, and this information is true, complete and correct to the best of my knowledge and belief after I have taken reasonable and appropriate steps to verify the accuracy thereof.

I affirm that I have read and understand that the provisions of 40 CFR part 80, subparts D, E and F, including 40 CFR 80.94 (i), (j) and (k), apply to [insert name of foreign refiner or vessel owner]. Pursuant to Clean Air Act section 113(c) and Title 18, United States Code, section 1001, the penalty for furnishing false, incomplete or misleading information in this certification or submission is a fine of up to $10,000, and/or imprisonment for up to five years.

[62 FR 45563, Aug. 28, 1997]

§§ 80.95–80.100 [Reserved]

§ 80.101 Standards applicable to refiners and importers.

Any refiner or importer of conventional gasoline shall meet the standards specified in this section over the specified averaging period, beginning on January 1, 1995.

(a) *Averaging period.* The averaging period for the standards specified in this section shall be January 1 through December 31, except as provided in paragraph (k) of this section.

(b) *Conventional gasoline compliance standards*—(1) *Simple model standards.* The simple model standards are the following:

(i) Annual average exhaust benzene emissions, calculated according to paragraph (g)(1)(i) of this section, shall not exceed the refiner's or importer's compliance baseline for exhaust benzene emissions;

(ii) Annual average levels of sulfur shall not exceed 125% of the refiner's or importer's compliance baseline for sulfur;

(iii) Annual average levels of olefins shall not exceed 125% of the refiner's or importer's compliance baseline for olefins; and

(iv) Annual average values of T–90 shall not exceed 125% of the refiner's or importer's compliance baseline for T–90.

(2) *Optional complex model standards.* Annual average levels of exhaust benzene emissions, weighted by volume for each batch and calculated using the applicable complex model under § 80.45, shall not exceed the refiner's or importer's 1990 average exhaust benzene emissions.

(3) *Complex model standards.* (i) Annual average levels of exhaust toxics emissions and NO_X emissions, weighted by volume for each batch and calculated using the applicable complex model under § 80.45, shall not exceed the refiner's or importer's compliance baseline for exhaust toxics and NO_X emissions, respectively.

(ii) Annual average levels of RVP, benzene, aromatics, olefins, sulfur, E200 and E300 shall not be greater than the conventional gasoline complex model valid range limits for the parameter under § 80.45(f)(1)(ii), or the refiner or importer's annual 1990 baseline for the parameter if outside the valid range limit, whichever is greater.

(c) *Applicability of standards.* (1) For each averaging period prior to January 1, 1998, a refiner or importer shall be subject to either the Simple Model or Optional Complex Model Standards, at their option, except that any refiner or importer shall be subject to:

(i) The Simple Model Standards if the refiner or importer uses the Simple Model Standards for reformulated gasoline; or

(ii) The Optional Complex Model Standards if the refiner or importer used the Complex Model Standards for reformulated gasoline.

(2) Beginning January 1, 1998, each refiner and importer shall be subject to the Complex Model Standards for each averaging period.

(d) *Product to which standards apply.* Any refiner for each refinery, or any importer, shall include in its compliance calculations:

(1) Any conventional gasoline produced or imported during the averaging period;

(2) Any non-gasoline petroleum products that are produced or imported and sold or transferred from the refinery or group of refineries or importer during the averaging period, if required pursuant to § 80.102(e)(2), unless the refiner or importer is able to establish in the form of documentation that the petroleum products were used for a purpose other than the production of gasoline within the United States;

(3) Any gasoline blending stock produced or imported during the averaging period which becomes conventional gasoline solely upon the addition of oxygenate;

(4)(i) Any oxygenate that is added to conventional gasoline, or gasoline blending stock as described in paragraph (d)(3) of this section, where such gasoline or gasoline blending stock is produced or imported during the averaging period;

(ii) In the case of oxygenate that is added at a point downstream of the refinery or import facility, the oxygenate may be included only if the refiner or importer can establish the oxygenate was in fact added to the gasoline or gasoline blendstock produced, by showing that the oxygenate was added by:

(A) The refiner or importer; or

(B) By a person other than the refiner or importer, provided that the refiner or importer:

(*1*) Has a contract with the oxygenate blender that specifies procedures to be followed by the oxygenate blender that are reasonably calculated to ensure blending with the amount and type of oxygenate claimed by the refiner or importer; and

(*2*) Monitors the oxygenate blending operation to ensure the volume and type of oxygenate claimed by the refiner or importer is correct, through periodic audits of the oxygenate blender designed to assess whether the overall volumes and type of oxygenate purchased and used by the oxygenate blender are consistent with the oxygenate claimed by the refiner or importer and that this oxygenate was blended with the refiner's or importer's gasoline or blending stock, periodic sampling and testing of the gasoline produced subsequent to oxygenate blending, and periodic inspections to ensure the contractual requirements imposed by the refiner or importer on the oxygenate blender are being met.

(e) *Product to which standards do not apply*. Any refiner for each refinery, or any importer, shall exclude from its compliance calculations:

(1) Gasoline that was not produced at the refinery or was not imported by the importer;

(2) Blendstocks that have been included in another refiner's compliance calculations, pursuant to § 80.102(e)(2) or otherwise;

(3) California gasoline as defined in § 80.81(a)(2); and

(4) Gasoline that is exported.

(f) *Compliance baseline determinations*. (1) In the case of any refiner or importer for whom an individual baseline has been established under § 80.91, the individual baseline for each parameter or emissions performance shall be the compliance baseline for that refiner or importer.

(2) In the case of any refiner or importer for whom the anti-dumping statutory baseline applies under § 80.91, the anti-dumping statutory baseline for each parameter or emissions performance shall be the compliance baseline for that refiner or importer.

(3) [Reserved]

(4) Any compliance baseline under paragraph (f)(1) of this section shall be adjusted for each averaging period as follows:

(i) If the total volume of the conventional gasoline, RBOB, reformulated gasoline, and California gasoline as defined in § 80.81(a)(2), produced or imported by any refiner or importer during the averaging period is equal to or less than that refiner's or importer's 1990 baseline volume as determined under § 80.91(f)(1), the compliance baseline for each parameter or emissions performance shall be that refiner's or importer's individual 1990 baseline; or

(ii) If the total volume of the conventional gasoline, RBOB, reformulated gasoline, and California gasoline as defined in § 80.81(a)(2), produced or imported by any refiner or importer during the averaging period is greater than that refiner's or importer's 1990 baseline volume as determined under § 80.91(f)(1), the compliance baseline for each parameter or emissions performance shall be calculated according to the following formula:

$$CB_i = \left(B_i * \left(\frac{V_{1990}}{V_a}\right)\right) + \left(DB_i * \left(1 - \frac{V_{1990}}{V_a}\right)\right)$$

Where:

CB_i = The compliance baseline value for parameter or emissions performance i.

B_i = The refiner's or importer's individual baseline value for parameter or emission performance i calculated according to the methodology in § 80.91.

DB_i = The anti-dumping statutory baseline value for parameter or emissions performance i, as specified at § 80.91(c)(5)(iii) or (c)(5)(iv), respectively.

V_{1990} = The 1990 baseline volume as determined under § 80.91(f)(1).

V_a = The total volume of reformulated gasoline, conventional gasoline, RBOB, and California gasoline as defined in § 80.81(a)(2) produced or imported by a refiner or importer during the averaging period.

(iii) Any refiner or importer with Puerto Rico gasoline, or Puerto Rico and U.S. Virgin Islands gasoline, in its individual baseline and which has met the requirements specified in paragraph (g)(1)(ii)(B) of this section, and whose total volume of conventional gasoline, RBOB, reformulated gasoline, and California gasoline, as defined in § 80.81(a)(2), produced or imported by the refiner or importer during the averaging period is greater than that refiner's or importer's 1990 baseline volume as determined under § 80.91(f)(1), must calculate the compliance baseline for each parameter or emissions performance according to the following formula:

$$CB_i = \left(B_i * \left(\frac{V_{1990} - V_{1990s}}{V_a}\right)\right) + \left(BS_i * \left(\frac{V_{1990s}}{V_a}\right)\right) + \left(DBA_i * \left(1 - \frac{V_{1990}}{V_a}\right) * \left(1 - \frac{V_{as}}{V_a}\right)\right) + \left(DBS_i * \left(1 - \frac{V_{1990}}{V_a}\right) * \left(\frac{V_{as}}{V_a}\right)\right)$$

where:

CB_i = the compliance baseline value for emissions performance i

B_i = the refiner's or importer's individual annual baseline for emissions performance i under § 80.91 for gasoline supplied to areas subject to volatility standards under § 80.27

BS_i = the refiner's or importer's individual baseline as determined under § 80.91 using the summer Complex Model, for gasoline supplied to Puerto Rico and the U.S. Virgin Islands, for emissions performance i

DBA_i = annual anti-dumping statutory baseline value for emissions performance i under § 80.91(c)(5)(iv)

DBS_i = the summer statutory baseline value for emissions performance i under § 80.45(b)(3), table 5

V_a = total volume of RFG, conventional gasoline, RBOB, oxygenates and California gasoline as defined under § 80.81(a)(2) produced or imported during the averaging period

V_{1990} = 1990 baseline volume under § 80.91(f)(1)

V_{1990s} = 1990 baseline volume of gasoline supplied to Puerto Rico and the U.S. Virgin Islands

V_{as} = volume of conventional gasoline supplied during the averaging period to Puerto Rico and the U.S. Virgin Islands

i = exhaust toxics or NO_X emissions performance

(4) Any compliance baseline under paragraph (f)(1) of this section shall be adjusted for each averaging period as follows:

(g) *Compliance calculations*—(1)(i) *Simple model calculations*. In the case of any refiner or importer subject to an individual refinery baseline, the annual average value for each parameter or emissions performance during the averaging period, calculated according to the following methodologies, shall be less than or equal to the refiner's or importer's standard under paragraph (b) of this section for that parameter.

(A) The average value for sulfur, T–90, olefin, benzene, and aromatics for an averaging period shall be calculated as follows:

$$APARM = \left(\frac{\sum_{i=1}^{n} \left(V_i \times PARM_i \times SG_i \right)}{\sum_{i=1}^{n} V_i \times SG_i} \right)$$

where

APARM = the average value for the parameter being evaluated

Vi = the volume of conventional gasoline or other products included under paragraph (d) of this section, in batch i

$PARM_i$ = the value of the parameter being evaluated for batch i as determined in accordance with the test methods specified in § 80.46

n = the number of batches of conventional gasoline and other products included under paragraph (d) of this section produced or imported during the averaging period

SG_i = specific gravity of batch i (only applicable for sulfur)

(B) Exhaust benzene emissions under the Simple Model for an averaging period are calculated as follows:

$$EXHBEN = 1.884 + (0.949 \times BZ) + (0.113 \times (AR - BZ))$$

where

EXHBEN = the average exhaust benzene emissions for the averaging period

BZ = the average benzene content for the averaging period, calculated per paragraph (g)(1)(i)(A) of this section

AR = the average aromatics content for the averaging period, calculated per paragraph (g)(1)(i)(A) of this section

(ii) Complex Model calculations.

(A) Exhaust benzene, exhaust toxics, and exhaust NO_X emissions performance for each batch shall be calculated in accordance with the applicable model under § 80.45.

(B) A refiner which has Puerto Rico gasoline, or Puerto Rico and U.S. Virgin Islands gasoline, in its baseline shall use the summer Complex Model to evaluate its averaging period Puerto Rico and U.S. Virgin Islands gasoline provided it has petitioned the Agency, per § 80.93(d), and has received Agency approval on the petition, and has revised its individual baseline, such that the Puerto Rico and U.S. Virgin Islands gasoline in its individual baseline has been evaluated using the summer Complex Model.

(2) In the case of any refiner or importer subject to the anti-dumping statutory baseline, the refiner or importer shall determine compliance using the following methodology:

(i) Calculate the compliance total for the averaging period for sulfur, T–90, olefins, exhaust benzene emissions, exhaust toxics and exhaust NO_X emissions, as applicable, based upon the anti-dumping statutory baseline value for that parameter using the formula specified at § 80.67.

(ii) Calculate the actual total for the averaging period for sulfur, T–90, olefins, exhaust benzene emissions, exhaust toxics and exhaust NO_X emissions, as applicable, based upon the value of the parameter for each batch of conventional gasoline and gasoline blendstocks, if applicable, using the formula specified at § 80.67.

(iii) The actual total for exhaust benzene emissions, exhaust toxics and exhaust NO_X emissions, shall not exceed the compliance total, and the actual totals for sulfur, olefins and T–90 shall not exceed 125% of the compliance totals, as required under the applicable model.

(3) Exhaust toxics and NO_X emissions performance of a blendstock batch shall be determined as follows:

(i) Determine the volume and properties of the blendstock.

(ii) Determine the blendstock volume fraction (F) based on the volume of blendstock, and the volume of gasoline with which the blendstock is blended, using the following equation:

$$F = \frac{V_b}{V_b + V_g}$$

where:

F = blendstock volume fraction

V_b = volume of blendstock

V_g = volume of gasoline with which the blendstock is blended

(iii) For each parameter required by the complex model, calculate the parameter value that would result by combining, at the blendstock volume fraction (F), the blendstock with a gasoline having properties equal to the refinery's or importer's baseline, using the following formula:

$$CP_j = \frac{\left(BAP_j \times V_g\right) + \left(BLP_j \times V_b\right)}{V_g + V_b}$$

where:

CP_j = calculated value for parameter j
BAP_j = baseline value for parameter j
BLP_j = value of parameter j for the blendstock or oxygenate
j = each parameter required by the complex model

(A) The baseline value shall be the refinery's ''summer'' or ''winter'' baseline, based on the ''summer'' or ''winter'' classification of the gasoline produced as determined under paragraphs (g)(5) or (g)(6) of this section. In the case of a refinery that is aggregated under paragraph (h) of this section, the refinery baseline shall be used, and not the aggregate baseline.

(B) The sulfur content and oxygen wt% computations under paragraph (g)(3)(iii) of this section shall be adjusted for the specific gravity of the gasoline and blendstock using specific gravities of 0.749 for ''summer'' gasoline and of 0.738 for ''winter'' gasoline.

(C) In the case of ''summer'' gasoline, where the blendstock is ethanol and the volume fraction calculated under paragraph (g)(3)(ii) is equal to or greater than 0.015, the value for RVP calculated under paragraph (g)(3)(iii) of this section shall be 1.0 psi greater than the RVP of the gasoline with which the blendstock is blended.

(iv) Using the summer or winter complex model, as appropriate, calculate the exhaust toxics and NO_X emissions performance, in mg/mi, of:

(A) A hypothetical gasoline having properties equal to those calculated in paragraph (g)(3)(iii) of this section (HEP); and

(B) A gasoline having properties equal to the refinery's or importer's baseline (BEP).

(v) Calculate the exhaust toxics and NO_X equivalent emissions performance (EEP) of the blendstock, in mg/mi, using the following equation:

$$EEP_j = \frac{HEP_j - \left(BEP_j * (1 - F)\right)}{F}$$

where:

EEP_j = equivalent emissions performance of the blendstock for emissions performance j
BEP_j = emissions performance j of a gasoline having the properties of the refinery's baseline
HEP_j = emissions performance j of a hypothetical blendstock/gasoline blend
F = blendstock volume fraction
j = exhaust toxics or NO_X emissions performance

(vi) For each blendstock batch, the volume, and exhaust toxics and NO_X equivalent emissions performance (EEP) shall be included in the refinery's compliance calculations.

(4) Compliance calculations under this subpart E shall be based on computations to the same degree of accuracy that are specified in establishing individual baselines under § 80.91.

(5) The emissions performance of gasoline that has an RVP that is equal to or less than the RVP required under § 80.27 (''summer gasoline'') shall be determined using the applicable summer complex model under § 80.45.

(6) The emissions performance of gasoline that has an RVP greater than the RVP required under § 80.27 (''winter gasoline'') shall be determined using the applicable winter complex model under § 80.45, using an RVP of 8.7 psi for compliance calculation purposes under this subpart E.

(7)(i) For the 1998 averaging period any refiner or importer may elect to determine compliance with the requirement for exhaust NO_X emissions performance either with or without the inclusion of oxygenates in its compliance calculations, in accordance with § 80.91(e)(4), provided that the baseline exhaust NO_X emissions performance is calculated using the same with- or without-oxygen approach.

(ii)(A) Any refiner or importer must use the with- or without-oxygen approach elected under paragraph (g)(7)(i) of this section for all subsequent averaging periods; except that

(B) In the case of any refiner or importer who elects to determines compliance for the calendar year 1998 averaging period without the inclusion of oxygenates, such refiner or importer may elect to include oxygenates in its compliance calculations for the 1999 averaging period.

(iii) Any refiner or importer who elects to use the with-oxygen approach under paragraph (g)(7)(ii)(B) of this section must use this approach for all subsequent averaging periods.

(8) *Emissions performance of conventional gasoline with parameters outside the complex model valid range limits.* Notwithstanding the provisions of § 80.45(f)(2), in the case of any parameter value that does not fall within the complex model range limit in § 80.45(f)(1)(ii), the refiner or importer shall determine the emissions performance of the batch using the following parameter values:

Parameter outside the range limit	Parameter value to use for calculating	
	Exhaust toxics	NO_X
Sulfur	Test value[1]	Test value.[1]
RVP (summer only):		
< 6.4 psi	6.4 psi	6.4 psi.
> 11.0 psi	Test value[1]	Test value.[1]
Aromatics	Test value[1]	Test value.[1]
Olefins	Test value[1]	Test value.[1]
Benzene	Test value[1]	Test value.[1]
E200:		
< 30%	Test value[1]	30%
> 70%	70%	Test value.[1]
E300 < 70%	Test value[1]	Test value.[1]

[1] Test value is the value for a parameter determined pursuant to paragraph 80.101(i)(1)(i) of this section.

(h) *Refinery grouping for determining compliance.* (1) Any refiner that operates more than one refinery may:

(i) Elect to achieve compliance individually for the refineries; or

(ii) Elect to achieve compliance on an aggregate basis for a group, or for groups, of refineries, some of which may be individual refineries; provided that

(iii) Compliance is achieved for each refinery separately or as part of a group; and

(iv) The data for any refinery is included only in one compliance calculation.

(2) Any election by a refiner to group refineries under paragraph (h)(1) of this section shall:

(i) Be made as part of the report for the 1995 averaging period required by § 80.105;

(ii) Apply for the 1995 averaging period and for each subsequent averaging period, and may not thereafter be changed; and

(iii) Apply for purposes of the blendstock tracking and accounting provisions under § 80.102.

(3)(i) Any standards under this section shall apply, and compliance calculations shall be made, separately for each refinery or refinery group; except that

(ii) Any refiner that produces conventional gasoline for distribution to a specified geographic area which is the subject of a petition approved by EPA pursuant to § 80.91(f)(3) shall achieve compliance separately for gasoline supplied to such specified geographic area.

(i) *Sampling and testing.* (1) Any refiner or importer shall for each batch of conventional gasoline, and other products if included in paragraph (d) of this section:

(i)(A) Determine the value of each of the properties required for determining compliance with the standards that are applicable to the refiner or importer, by collecting and analyzing a representative sample of gasoline or blendstock taken from the batch, using the methodologies specified in § 80.46; except that

(B) Any refiner that produces gasoline by combining blendstock with gasoline that has been included in the compliance calculations of another refiner or of an importer may for such gasoline meet this sampling and testing requirement by collecting and analyzing a representative sample of the blendstock used subsequent to each receipt of such blendstock if the compliance calculation method specified in paragraph (g)(3) of this section is used.

(ii) Assign a number to the batch (the ''batch number''), as specified in § 80.65(d)(3);

(2) For the purposes of meeting the sampling and testing requirements under paragraph (i)(1) of this section, any refiner or importer may, prior to analysis, combine samples of gasoline collected from more than one batch of gasoline or blendstock (''composite sample''), and treat such composite

sample as one batch of gasoline or blendstock provided that the refiner or importer:

(i) Meets each of the requirements specified in § 80.91(d)(4)(iii) for the samples contained in the composite sample;

(ii) Combines samples of gasoline that are produced or imported over a period no longer than one month;

(iii) Uses the total of the volumes of the batches of gasoline that comprise the composite sample, and the results of the analyses of the composite sample, for purposes of compliance calculations under paragraph (g) of this section; and

(iv) Does not combine summer and winter gasoline, as specified under paragraphs (g) (5) and (6) of this section, in a composite sample.

(j) *Evasion of standards through exporting and importing gasoline*. Notwithstanding the requirements of this section, no refiner or importer shall export gasoline and import the same or other gasoline for the purpose of evading a more stringent baseline requirement.

(k) *Petitions for an alternative anti-dumping averaging period*.

(1) *Eligibility for petition*. (i) The Administrator may grant an averaging period of two, three, four or five years upon petition of a refiner who:

(A) Activates or plans to activate conventional gasoline production at a refinery that has never produced gasoline subject to the anti-dumping requirements of subpart E of this part; and

(B) Faces substantial, demonstrated hardship in meeting the anti-dumping statutory baseline NO_X standard during the early years of production.

(ii) The Administrator will consider the refiner's or refinery's compliance with all applicable Federal, state, and local environmental statutes or requirements in evaluating the petition, including, but not limited to, any applicable stationary source requirement or standards.

(2) *Contents of a petition*. A petition for a four or five year averaging period must be submitted by June 1, 2001. A petition for a two or three year averaging period must be submitted by June 1, 2003. Regardless of the averaging period requested, the petition must include:

(i) The business name and address of the affected refinery and any location(s) where the refiner conducts operations.

(ii) The name, address, phone number, fax number, and e-mail address of the responsible corporate officer and contact person who can provide clarification and explanation with regard to any information in the petition.

(iii) A detailed explanation of why the refinery is eligible for an alternative anti-dumping compliance period under paragraph (k)(1) of this section, including:

(A) Documentation the refinery has never produced gasoline that was subject to the anti-dumping standards under subpart E of this part and

(B) Documentation demonstrating the hardship the refinery will experience meeting the anti-dumping statutory baseline NO_X standard.

(iv) The length of the averaging period requested and a justification for why that length of averaging period is required.

(v) An estimate as to when the refinery can produce gasoline that will meet the statutory baseline standard for NO_X.

(vi) The refinery's estimated gasoline production and annual average NO_X level for each of the years for which the alternative averaging period is requested.

(vii) A detailed description of the current refinery equipment and configuration.

(viii) A detailed description of changes to the refinery equipment the refiner intends to complete in order to begin producing gasoline that will allow the refinery to comply with the overall alternative averaging period NO_X standard, and for such changes the intended dates for events the refiner believes are appropriate for demonstrating reasonable progress towards completion of the changes, including the following events:

(A) Sign the design contract;

(B) Obtain necessary permits;

(C) Obtain construction financing commitments;

(D) Begin construction.

(E) Complete construction

(ix) The current nominal crude capacity of the refinery as reported to the Energy Information Administration (EIA) of the Department of Energy (DOE).

(x) A detailed explanation of the refiner's plans to finance capital improvements at the refinery in order to meet all current applicable EPA gasoline and diesel fuel quality standards.

(xi) A demonstration that the refiner has the funds and identified sources from which to purchase stationary source NO_X credits sufficient to offset the maximum projected NO_X deficit as calculated in accordance with paragraph (k)(4)(ii) of this section on a quarterly basis.

(xii) A full disclosure and explanation of any matters of non-compliance or violations of any environmental statutes or requirements for which the refiner has received notification by any state, local, or Federal agency.

(xiii) A signed agreement by any parent company or, in the case of a joint venture, individual partners, if applicable, acknowledging that they will be liable for any violations.

(xiv) Any other information the Administrator may require in order to fully evaluate the refiner's petition.

(xv) The signature of a responsible corporate officer, certifying that the information contained in the petition is true.

(3) *NO_X standards and other requirements applicable to refineries operating under an alternative anti-dumping averaging period*. If a petition by a refiner is approved, the standards described in this paragraph shall be the standards applicable to the refinery identified in the petition for purposes of the anti-dumping program during the period of the alternative averaging period. Except as specifically modified by this section, the refinery must continue to comply with all other standards applicable under the anti-dumping standards of subpart E of this part.

(i) A refinery shall meet the following deadlines for compliance with the statutory baseline, depending on the length of the alternative averaging period applicable to the refinery:

Length of compliance period in years	Compliance period must start no. later than January 1st of	Refinery must comply with the Statutory Baseline NO_X standard, on average, for gasoline produced beginning with the
2	2004	7th quarter and all subsequent quarters.
3	2003	10th quarter and all subsequent quarters.
4	2002	13th quarter and all subsequent quarters.
5	2001	20th quarter and all subsequent quarters.

(ii) By the end of the applicable alternative averaging period, the gasoline that the refinery has produced over the entire averaging period must result in a net NO_X benefit (compared to the statutory baseline) that is at least twice as large as the total NO_X deficit generated during the period of time during which the refinery produced gasoline that did not comply with the statutory baseline. For the purposes of this paragraph, the NO_X deficit and the NO_X benefit in tons shall be calculated in accordance with the following equations:

NO_X Deficit:

$$NO_{X_{Def}} = \left(NO_{X_{ad}} - 1461\right) * G_d * 2.7 \times 10^{-8}$$

Where:

NO_{XDef} = the NO_X deficit in tons for the quarter(s) the refiner's annual average NO_X performance exceeds the applicable NOx standard of 1461 mg/mile.

NO_{Xad} = the average volume weighted NOx emissions performance for the quarter(s) the refiner exceeds the applicable NO_X standard, measured in mg/mile.

G_d = the volume of gasoline produced during the quarter(s) the refiner exceeds the applicable NO_X standard, measured in gallons.

NO_X Benefit:

$$NO_{X_{Ben}} = \left(1461 - NO_{X_{ab}}\right) * G_b * 2.7 \times 10^{-8}$$

Where:

NO_{XBen} = the NO_X benefit in tons during the quarter(s) the refiner's annual average NO_X performance is below the applicable NO_X standard of 1461 mg/mile.

NO_{Xab} = the average volume weighted NO_X emissions performance for the quarter(s) the refiner is below the applicable NO_X standard, measured in mg/mile.

G_b = the volume of gasoline produced during the quarter(s) the refiner is below the applicable NO_X standard, measured in gallons.

(iii) For each quarter for which the refinery produces gasoline for which there is a NO_X deficit, the refiner shall purchase and bank stationary source NO_x credits that are equal to or greater than the amount of the NO_X deficit generated during the previous quarter, and provide written demonstration of such transaction to the Administrator. These NO_X credits are in addition to any credits purchased during any previous quarters. NO_X deficit is to be calculated on a quarterly basis in accordance with the equation in paragraph (k)(3)(ii) of this section. No NO_X credits purchased by the refiner may contribute to the refinery's compliance with the requirements of paragraphs (k)(3)(i) and (k)(3)(ii). The refinery may sell NO_X credits purchased under this paragraph once the standard in paragraph (k)(3)(i) is met and in an amount equal to the NO_X benefit generated, as calculated on a quarterly basis.

(iv) (A) The refinery shall not generate marketable credits or allotments under the Tier 2 gasoline program provisions of Subpart H of this part during the entire alternative averaging period and shall provide a written statement, on a quarterly basis, certifying that the refinery has not generated, produced, sold, or transferred any such marketable credits or allotments under Subpart H of this part.

(B) If the final quarter of the alternative averaging period ends on a date other than December 31, then the refiner may generate credits for that portion of the year that was not subject to the alternative averaging period.

(v) The refinery shall market any conventional gasoline it produces that is subject to the requirements of § 80.27 as 9.0 RVP gasoline until the standard in paragraph (k)(3)(i) of this section is met.

(vi) A refinery that has been granted an averaging period under this section must submit the following reports to the Administrator within 30 days of the end of each calendar quarter:

(A) Quarterly batch reports and anti-dumping averaging reports for gasoline produced during each quarter; and

(B)(*1*) Documents that demonstrate compliance with the requirements under paragraph (k)(3)(iii) and (k)(3)(iv) of this section. including a calculation of the NO_X deficit or benefit for that quarter and a current total, based upon all quarters, indicating the current NO_X deficit or NO_X benefit balance for the refinery; and

(*2*) A statement of the number of NO_X credits purchased or sold during the quarter and a current total, based upon all quarters, indicating the current balance of NO_X credits; and

(*3*) Any contractual documents, or other documents, evidencing the purchasing and banking of NO_X credits.

(vii) The Administrator may specify, as part of the approved petition, deadlines by which a refiner is obligated to take certain actions (including those listed in paragraph (k)(2)(viii) of this section) demonstrating reasonable progress toward completion of the refinery changes necessary to produce gasoline that will allow the refinery to comply with the overall alternative averaging period NO_X standard.

(viii) The refiner shall submit reports demonstrating compliance with deadline requirements under paragraph (k)(3)(vii) of this section no later than 30 days after the applicable deadline occurs. Upon failure to meet a deadline requirement under paragraph (k)(3)(vii) of this section, the Administrator may accelerate the date by which the refiner would have to produce gasoline that complies with the annual average statutory baseline NO_X standard under paragraph (k)(3)(i) of this section such that the gasoline produced by the refinery beginning with the quarter immediately following the quarter during which the failure occurred (and during each subsequent quarter) would have to meet that standard. The acceleration of the requirement under paragraph (k)(3)(i) of this section, regarding compliance with the annual average statutory baseline NO_X standard, does not affect the applicability of any other standard or requirement applicable to the refinery under this or any other section of the Act (*e.g.*, the refinery

must still comply with the overall alternative averaging period NO_X standard by producing gasoline that overcomplies with the annual average statutory NO_X standard by twice as much as the early NO_X deficit generated by the refinery).

(ix) The refiner shall comply with any condition or requirement prescribed by the Administrator as part of the petition approval.

(x) The refinery must comply with all standards in this paragraph and with all applicable anti-dumping standards in Subpart E of this section, except the NO_X standard.

(4) *Approval or disapproval of petitions.* The Administrator will approve or disapprove the petition within six months of receipt, in writing, and in the case of an approval will include any conditions or requirements to which the approval is subject.

(5) *Effective date for alternative averaging period.* (i) For an approved petition, the alternative averaging period shall become effective with the first day of the next calendar quarter, unless the first day of a later calendar quarter is requested.

(ii) If the final quarter of the alternative averaging period ends on a date other than December 31, then the refiner must demonstrate compliance with anti-dumping standards for gasoline produced during the remainder of that year and must demonstrate such compliance via the annual report as specified in § 80.105.

(6) *Refinery request for a change in alternative averaging period.* At any point during the pendency of an alternative conventional gasoline anti-dumping compliance period the Administrator may, upon application by a refiner, approve a different alternative compliance period for a refinery already operating subject to an alternative compliance period. In any such case:

(i) A refinery for which a change in the applicable alternative compliance period is approved shall thereafter operate as if the refinery had originally requested and received such alternative compliance period, and shall be subject to the standards and other requirements applicable under such alternative compliance period.

(ii) The Administrator will approve or disapprove any application for a different alternative compliance period, in writing, within six months of receipt, and in the case of an approval will include any conditions or other requirements to which the approval is subject;

(iii) Accept as specifically modified by this section, such refinery must continue to comply with all other standards and other requirements applicable under the conventional gasoline anti-dumping standards; and

(iv) No application may result in an alternative compliance period that extends beyond January 1, 2006.

(7) *Violations under this paragraph (k).* Any person who fails to meet a standard or other requirement under this paragraph (k) shall be liable for penalties under § 80.5. Additionally, in the event that the refiner fails to achieve the required NO_X benefit calculated under paragraph (k)(3)(ii) of this section, any NO_X credits still banked under paragraph (k)(3)(iii) of this section shall be forfeit.

[59 FR 7860, Feb. 16, 1994, as amended at 59 FR 36968, July 20, 1994; 60 FR 40008, Aug. 4, 1995; 62 FR 9884, Mar. 4, 1997; 62 FR 68207, Dec. 31, 1997; 64 FR 30910, June 9, 1999; 64 FR 37689, July 13, 1999; 65 FR 54431, Sept. 8, 2000]

§ 80.102 Controls applicable to blendstocks.

(a) For the purposes of this subpart E:

(1) All of the following petroleum products that are produced by a refiner or imported by an importer shall be considered ''applicable blendstocks'':

(i) Reformate;

(ii) Light coker naphtha;

(iii) FCC naphtha;

(iv) Benzene/toluene/xylene;

(v) Pyrolysis gas;

(vi) Aromatics;

(vii) Polygasoline; and

(viii) Dimate; and

(2) Any gasoline blendstock with properties such that, if oxygenate only is added to the blendstock the resulting blend meets the definition of gasoline under § 80.2(c), shall be considered gasoline.

(b)(1) Any refiner or importer of conventional gasoline or blendstocks shall determine the baseline blendstock-to-

gasoline ratio for each calendar year 1990 through 1993 according to the following formula:

$$BG_{by} = \frac{V_{bs}}{V_g}$$

where:

BG_{by} = Blendstock-to-gasoline ratio for base year

V_{bs} = Volume of applicable blendstock produced or imported and transferred to others during the calendar year, and used to produce gasoline

V_g = Volume of gasoline produced or imported during the calendar year

(2)(i) Only those volumes of applicable blendstocks for which the refiner is able to demonstrate the blendstock was used in the production of gasoline may be included in baseline blendstock-to-gasoline ratios under paragraph (b)(1) of this section.

(ii) The baseline volume data for applicable blendstocks and gasoline shall be confirmed through the baseline audit requirements specified in § 80.92 and submitted in accordance with the requirements of § 80.93.

(c) Any refiner or importer shall calculate the baseline cumulative blendstock-to-gasoline ratio according to the following formula:

$$BGC_{base} = \frac{\sum_{i=1}^{n} V_{bs,i}}{\sum_{i=1}^{n} V_{g,i}}$$

where:

BGC_{base} = Baseline cumulative blendstock-to-gasoline ratio

$V_{bs,i}$ = Volume of applicable blendstock produced or imported and transferred to others during calendar year i

$V_{g,i}$ = Volume of gasoline produced or imported during calendar year i

i = each year, 1990 through 1993, for which a blendstock-to-gasoline ratio is calculated under paragraph (b) of this section

(d)(1) For each averaging period, any refiner or importer shall:

(i) Determine the averaging period blendstock-to-gasoline ratio according to the following formula:

$$BG_a = \frac{V_{bs}}{V_g}$$

where:

BG_a = Blendstock-to-gasoline ratio for the current averaging period

V_{bs} = Volume of applicable blendstock produced or imported and subsequently transferred to others during the averaging period

V_g = Volume of conventional gasoline, reformulated gasoline and RBOB produced or imported during the averaging period, excluding California gasoline as defined in § 80.81(a)(2)

(ii) For each averaging period until January 1, 1998, calculate the peak year blendstock-to-gasoline ratio percentage change according to the following formula:

$$PC_p = \left(\frac{BG_a - BG_p}{BG_p}\right) \times 100$$

where:

PC_p = Peak year blendstock-to-gasoline ratio percentage change

BG_a = Blendstock-to-gasoline ratio for the averaging period calculated under paragraph (d)(1)(i) of this section

BG_p = Largest one year blendstock-to-gasoline ratio calculated under paragraph (b) of this section

(2) Beginning on January 1, 1998, for each averaging period any refiner or importer shall:

(i) Determine the running cumulative compliance period blendstock-to-gasoline ratio according to the following formula:

$$BGC_{comp} = \frac{\sum_{i=1}^{n} V_{bs,i}}{\sum_{i=1}^{n} V_{g,i}}$$

where:

BGC_{comp} = Running cumulative compliance period blendstock-to-gasoline ratio

$V_{bs,i}$ = Volume of applicable blendstock produced or imported and transferred to others during averaging period i

$V_{g,i}$ = Volume of conventional gasoline, reformulated gasoline and RBOB produced or

imported during averaging period i, excluding California gasoline as defined in § 80.81(a)(2)

i = The current averaging period, and each of the three immediately preceding averaging periods

(ii) Calculate the cumulative blendstock-to-gasoline ratio percentage change according to the following formula:

$$PC_c = \left(\frac{BGC_{comp} - BGC_{base}}{BGC_{base}} \right) \times 100$$

where:

PC_c = Cumulative blendstock-to-gasoline ratio percentage change

BGC_{comp} = Running cumulative compliance period blendstock-to-gasoline ratio as determined in paragraph (d)(2)(i) of this section

BGC_{base} = Baseline cumulative blendstock-to-gasoline ratio calculated under paragraph (c) of this section

(3) For purposes of this paragraph (d), all applicable blendstocks produced or imported shall be included, except those for which the refiner or importer has sufficient evidence in the form of documentation that the blendstocks were:

(i) Exported;

(ii) Used for other than gasoline blending purposes;

(iii) Transferred to a refiner that used the blendstock as a ''feedstock'' in a refining process during which the blendstock underwent a substantial chemical or physical transformation; or

(iv) Transferred between refineries which have been grouped pursuant to § 80.101(h) by a refiner for the purpose of determining compliance under this subpart; or

(v) Used to produce California gasoline as defined in § 80.81(a)(2).

(e)(1) Any refiner or importer shall have exceeded the blendstock-to-gasoline ratio percentage change threshold if:

(i) The peak year blendstock-to-gasoline ratio percentage change calculated under paragraph (d)(1)(ii) of this section is more than ten; or

(ii) Beginning on January 1, 1998, the cumulative blendstock-to-gasoline ratio percentage change calculated under paragraph (d)(2)(ii) of this section is more than ten.

(2) Any refiner or importer that exceeds the blendstock-to-gasoline ratio percentage change threshold shall, without further notification:

(i) Include all blendstocks produced or imported and transferred to others in its compliance calculations under § 80.101(g) for two averaging periods beginning on January 1 of the averaging period subsequent to the averaging period when the exceedance occurs;

(ii) Provide transfer documents to the recipient of such blendstock that contain the language specified at § 80.106(b); and

(iii) Transfer such blendstock in a manner such that the ultimate blender of such blendstocks has a reasonable basis to know that such blendstock has been accounted for.

(3) Any refiner or importer that has previously exceeded the blendstock-to-gasoline ratio percentage change threshold, and subsequently exceeds the threshold for an averaging period and is not granted a waiver pursuant to paragraph (f)(2)(i) of this section, shall, without further notification, meet the requirements specified in paragraphs (e)(2) (i) through (iii) of this section for four averaging periods, beginning on January 1 of the averaging period following the averaging period when the subsequent exceedance occurs.

(f)(1) The refiner or importer blendstock accounting requirements specified under paragraph (e) of this section shall not apply in the case of any refiner or importer:

(i) Whose 1990 baseline value for each regulated fuel property and emission performance, as determined in accordance with §§ 80.91 and 80.92, is less stringent than the anti-dumping statutory baseline value for that parameter or emissions performance;

(ii) Whose averaging period blendstock-to-gasoline ratio, calculated according to paragraph (d)(1)(i) of this section, is equal to or less than .0300; or

(iii) Who obtains a waiver from EPA, provided that a petition for such a waiver is filed no later than fifteen days following the end of the averaging

period for which the blendstock-to-gasoline ratio percentage change threshold is exceeded.

(2)(i) EPA may grant the waiver referred to in paragraph (f)(1)(iii) of this section if the level of blendstock production was the result of extreme or unusual circumstances (e.g., a natural disaster or act of God) which clearly are outside the control of the refiner or importer, and which could not have been avoided by the exercise of prudence, diligence, and due care.

(ii) Any petition filed under paragraph (f) of this section shall include information which describes the extreme or unusual circumstance which caused the increased volume of blendstock produced or imported, the steps taken to avoid the circumstance, and the steps taken to remedy or mitigate the effect of the circumstance.

(g) Notwithstanding the requirements of paragraphs (a) through (f) of this section, any refiner or importer that transfers applicable blendstock to another refiner or importer with a less stringent baseline requirement, either directly or indirectly, for the purpose of evading a more stringent baseline requirement, shall include such blendstock(s) in determining compliance with the applicable requirements of this subpart.

[59 FR 7860, Feb. 16, 1994, as amended at 59 FR 36969, July 20, 1994]

§ 80.103 Registration of refiners and importers.

Any refiner or importer of conventional gasoline must register with the Administrator in accordance with the provisions specified at § 80.76.

§ 80.104 Recordkeeping requirements.

Any refiner or importer shall maintain records containing the information as required by this section.

(a) Beginning in 1995, for each averaging period:

(1) Documents containing the information specified in paragraph (a)(2) of this section shall be obtained for:

(i) Each batch of conventional gasoline, and blendstock if blendstock accounting is required under § 80.102(e)(2); or

(ii) Each batch of blendstock received in the case of any refiner that determines compliance on the basis of blendstocks properties under § 80.101(g)(3).

(2)(i) The results of tests performed in accordance with § 80.101(i);

(ii) The volume of the batch;

(iii) The batch number;

(iv) The date of production, importation or receipt;

(v) The designation regarding whether the batch is summer or winter gasoline;

(vi) The product transfer documents for any conventional gasoline produced or imported;

(vii) The product transfer documents for any conventional gasoline received;

(viii) For any gasoline blendstocks received by or transferred from a refiner or importer, documents that reflect:

(A) The identification of the product;

(B) The date the product was transferred; and

(C) The volume of product;

(ix) In the case of any refinery-produced or imported products listed in § 80.102(a) that are excluded under § 80.102(d)(3), documents which demonstrate that basis for exclusion; and

(x) In the case of oxygenate that is added by a person other than the refiner or importer under § 80.101(d)(4)(ii)(B), documents that support the volume of oxygenate claimed by the refiner or importer, including the contract with the oxygenate blender and records relating to the audits, sampling and testing, and inspections of the oxygenate blender operation.

(xi) In the case of blendstocks that are included in refinery compliance calculations using the procedures under § 80.101(g)(3), documents that reflect the volume of blendstock and the volume of gasoline with which the blendstock is blended.

(b) Any refiner or importer shall retain the documents required in this section for a period of five years from the date the conventional gasoline or blendstock is produced or imported, and deliver such documents to the Administrator of EPA upon the Administrator's request.

[59 FR 7860, Feb. 16, 1994, as amended at 59 FR 36969, July 20, 1994; 62 FR 68208, Dec. 31, 1997]

§ 80.105 Reporting requirements.

(a) Beginning with the 1995 averaging period, and for each subsequent averaging period, any refiner for each refinery or group of refineries at which any conventional gasoline is produced, and any importer that imports any conventional gasoline, shall submit to the Administrator a report which contains the following information:

(1) The total gallons of conventional gasoline produced or imported;

(2)(i) The total gallons of applicable blendstocks produced or imported and transferred to others that are not excluded under § 80.102(d)(3); and

(ii) The total gallons of applicable blendstocks produced or imported and transferred to others that are excluded under § 80.102(d)(3);

(3) The total gallons of blendstocks included in compliance calculations pursuant to § 80.102(e)(2);

(4)(i) If using the simple model:

(A) The applicable exhaust benzene emissions standard under § 80.101(b)(1)(i);

(B) The average exhaust benzene emissions under § 80.101(g);

(C) The applicable sulfur content standard under § 80.101(b)(1)(ii) in parts per million;

(D) The average sulfur content under § 80.101(g) in parts per million;

(E) The difference between the applicable sulfur content standard under § 80.101(b)(1)(ii) in parts per million and the average sulfur content under paragraph (a)(4)(i)(D) of this section in parts per million, indicating whether the average is greater or lesser than the applicable standard;

(F) The applicable olefin content standard under § 80.101(b)(1)(iii) in volume percent;

(G) The average olefin content under § 80.101(g) in volume percent;

(H) The difference between the applicable olefin content standard under § 80.101(b)(1)(iii) in volume percent and the average olefin content under paragraph (a)(4)(i)(G) of this section in volume percent, indicating whether the average is greater or lesser than the applicable standard;

(I) The applicable T90 distillation point standard under § 80.101(b)(1)(iv) in degrees Fahrenheit;

(J) The average T90 distillation point under § 80.101(g) in degrees Fahrenheit; and

(K) The difference between the applicable T90 distillation point standard under § 80.101(b)(1)(iv) in degrees Fahrenheit and the average T90 distillation point under paragraph (a)(4)(i)(J) of this section in degrees Fahrenheit, indicating whether the average is greater or lesser than the applicable standard.

(ii) If using the optional complex model, the applicable exhaust benzene emissions standard and the average exhaust benzene emissions, under § 80.101(b)(2) and (g).

(iii) If using the complex model:

(A) The applicable exhaust toxics emissions standard and the average exhaust toxics emissions, under § 80.101(b)(3) and (g); and

(B) The applicable NO_X emissions standard and the average NO_X emissions, under § 80.101(b)(3) and (g).

(5) The following information for each batch of conventional gasoline or batch of blendstock included under paragraph (a) of this section:

(i) The batch number;

(ii) The date of production;

(iii) The volume of the batch;

(iv) The grade of gasoline produced (i.e., premium, mid-grade, or regular); and

(v) The properties, pursuant to § 80.101(i); and

(6) Such other information as EPA may require.

(b) The reporting requirements of paragraph (a) of this section do not apply in the case of any conventional gasoline or gasoline blendstock that is excluded from a refiner's or importer's compliance calculation pursuant to § 80.101(e).

(c) For each averaging period, each refiner and importer shall cause to be submitted to the Administrator of EPA, by May 30 of each year, a report in accordance with the requirements for the Attest Engagements of §§ 80.125 through 80.131.

(d) The report required by paragraph (a) of this section shall be:

(1) Submitted on forms and following procedures specified by the Administrator of EPA;

(2) Submitted to EPA by the last day of February each year for the prior calendar year averaging period; and

(3) Signed and certified as correct by the owner or a responsible corporate officer of the refiner or importer.

[59 FR 7860, Feb. 16, 1994, as amended at 59 FR 36969, July 20, 1994; 60 FR 65575, Dec. 20, 1995]

§ 80.106 Product transfer documents.

(a)(1) On each occasion when any person transfers custody or title to any conventional gasoline, the transferor shall provide to the transferee documents which include the following information:

(i) The name and address of the transferor;

(ii) The name and address of the transferee;

(iii) The volume of gasoline being transferred;

(iv) The location of the gasoline at the time of the transfer;

(v) The date of the transfer;

(vi) In the case of transferors or transferees who are refiners or importers, the EPA-assigned registration number of those persons; and

(vii) The following statement: ''This product does not meet the requirements for reformulated gasoline, and may not be used in any reformulated gasoline covered area.''

(2) The requirements of paragraph (a)(1) of this section apply to product that becomes gasoline upon the addition of oxygenate only.

(b) On each occasion when any person transfers custody or title to any blendstock that has been included in the refiner's or importer's compliance calculations under § 80.102(e)(2), the transferor shall provide to the transferee documents which include the following statement: ''For purposes of the Anti-Dumping requirements under 40 CFR part 80, subpart E, this blendstock has been accounted for by the refiner that produced it, and must be excluded from any subsequent compliance calculations.''

§§ 80.107–80.124 [Reserved]

Subpart F—Attest Engagements

SOURCE: 59 FR 7875, Feb. 16, 1994, unless otherwise noted.

§ 80.125 Attest engagements.

(a) Any refiner, importer, and oxygenate blender subject to the requirements of this subpart F shall engage an independent certified public accountant, or firm of such accountants (hereinafter referred to in this subpart F as ''CPA''), to perform an agreed-upon procedure attestation engagement of the underlying documentation that forms the basis of the reports required by §§ 80.75 and 80.105.

(b) The CPA shall perform the attestation engagements in accordance with the Statements on Standards for Attestation Engagements.

(c) The CPA may complete the requirements of this subpart F with the assistance of internal auditors who are employees or agents of the refiner, importer, or oxygenate blender, so long as such assistance is in accordance with the Statements on Standards for Attestation Engagements.

(d) Notwithstanding the requirements of paragraph (a) of this section, any refiner, importer, or oxygenate blender may satisfy the requirements of this subpart F if the requirements of this subpart F are completed by an auditor who is an employee of the refiner, importer, or oxygenate blender, provided that such employee:

(1) Is an internal auditor certified by the Institute of Internal Auditors, Inc. (hereinafter referred to in this subpart F as ''CIA''); and

(2) Completes the internal audits in accordance with the Codification of Standards for the Professional Practice of Internal Auditing.

(e) Use of a CPA or CIA who is debarred, suspended, or proposed for debarment pursuant to the Governmentwide Debarment and Suspension Regulations, 40 CFR part 32, or the Debarment, Suspension, and Ineligibility Provisions of the Federal Acquisition Regulations, 48 CFR part 9, subpart 9.4,

shall be deemed in noncompliance with the requirements of this section.

(f) The following documents are incorporated by reference: the Statements on Standards for Attestation Engagements, Codification of Statements on Auditing Standards, written by the American Institute of Certified Public Accountants, Inc., 1991, and published by the Commerce Clearing House, Inc., Identification Number 059021, and the Codification of Standards for the Professional Practice of Internal Auditing, written and published by the Institute of Internal Auditors, Inc., 1989, Identification Number ISBN 0–89413–207–5. These incorporations by reference were approved by the Director of the Federal Register in accordance with 5 U.S.C. 552(a) and 1 CFR part 51. Copies of the Statements on Standards for Attestation Engagements may be obtained from the American Institute of Certified Public Accountants, Inc., 1211 Avenue of the Americas, New York, New York 10036, and copies of the Codification of Standards for the Professional Practice of Internal Auditing may be obtained from the Institute of Internal Auditors, Inc., 249 Maitland Avenue, Altamonte Springs, Florida 32701–4201. Copies may be inspected at the U.S. Environmental Protection Agency, Office of the Air Docket, 401 M St., SW., Washington, DC., or at the Office of the Federal Register, 800 North Capitol Street, NW., suite 700, Washington DC.

[59 FR 7875, Feb. 16, 1994, as amended at 59 FR 36969, July 20, 1994]

§ 80.126 Definitions.

The following definitions shall apply for the purposes of this subpart F:

(a) *Averaging compliance records* shall include the calculations used to determine compliance with relevant standards on average, for each averaging period and for each quantity of gasoline for which standards must be achieved separately.

(b) *Credit trading records* shall include worksheets and EPA reports showing actual and complying totals for oxygen and benzene; credit calculation worksheets; contracts; letter agreements; and invoices and other documentation evidencing the transfer of credits.

(c) *Designation records* shall include laboratory analysis reports that identify whether gasoline meets the requirements for a given designation; operational and accounting reports of product storage; and product transfer documents.

(d) *Oxygenate blender records* shall include laboratory analysis reports; refiner, importer and oxygenate blender contracts; quality assurance program records; product transfer documents; oxygenate purchasing, inventory, and usage records; and daily tank inventory gauging reports, meter tickets, and product transfer documents.

(e) Product transfer documents shall include documents that reflect the transfer of ownership or physical custody of gasoline or blendstock, including invoices, receipts, bills of lading, manifests, and pipeline tickets.

(f) A *tender* means the physical transfer of custody of a volume of gasoline or other petroleum product all of which has the same identification (reformulated gasoline, conventional gasoline, RBOB, and other non-finished gasoline petroleum products), and characteristics (time and place of use restrictions for reformulated gasoline).

(g) *Volume records* shall include summaries of gasoline produced or imported that account for the volume of each type of gasoline produced or imported. The volumes shall be based on tank gauges or meter reports and temperature adjusted to 60 degrees Fahrenheit.

§ 80.127 Sample size guidelines.

In performing the attest engagement, the auditor shall sample relevant populations to which agreed-upon procedures will be applied using the methods specified in this section, which shall constitute a representative sample.

(a) Sample items shall be selected in such a way as to comprise a simple random sample of each relevant population; and

(b) Sample size shall be determined using one of the following options:

(1) *Option 1.* Determine the sample size using the following table:

SAMPLE SIZE, BASED UPON POPULATION SIZE

No. in population (N)	Sample size
66 and larger	29
41–65	25
26–40	20
0–25	N or 19, whichever is smaller.

(2) *Option 2*. Determine the sample size in such a manner that the sample size is equal to that which would result by using the following parameters and standard statistical methodologies:

Confidence Level—95%
Expected Error Rate—0%
Maximum Tolerable Error Rate—10%

(3) *Option 3*. The auditor may use some other form of sample selection and/or some other method to determine the sample size, provided that the resulting sample affords equal or better strength of inference and freedom from bias (as compared with paragraphs (b)(1) and (2) of this section), and that the auditor summarizes the substitute methods and clearly demonstrates their equivalence in the final report on the audit.

§ 80.128 Agreed upon procedures for refiners and importers.

The following are the minimum attest procedures that shall be carried out for each refinery and importer. Agreed upon procedures may vary from the procedures stated in this section due to the nature of the refiner's or importer's business or records, provided that any refiner or importer desiring to modify procedures obtains prior approval from EPA.

(a) Read the refiner's or importer's reports filed with EPA for the previous year as required by §§ 80.75, 80.83(g), and 80.105.

(b) Obtain a gasoline inventory reconciliation analysis for the current year from the refiner or importer which includes reformulated gasoline, RBOB, conventional gasoline, and non-finished-gasoline petroleum products.

(1) Test the mathematical accuracy of the calculations contained in the analysis.

(2) Agree the beginning and ending inventories to the refiner's or importer's perpetual inventory records.

(c) Obtain separate listings of all tenders during the current year of reformulated gasoline, RBOB, conventional gasoline, and non-finished-gasoline petroleum products.

(1) Test the mathematical accuracy of the calculations contained in the listings.

(2) Agree the listings of tenders' volumes to the gasoline inventory reconciliation in paragraph (b) of this section.

(3) Agree the listings of tenders' volumes, where applicable, to the EPA reports.

(d) Select a representative sample from the listing of reformulated gasoline tenders, and for this sample:

(1) Agree the volumes to the product transfer documents;

(2) Compare the product transfer documents designation for consistency with the time and place, and compliance model designations for the tender (VOC-controlled or non-VOC-controlled, VOC region for VOC-controlled, summer or winter gasoline, and simple or complex model certified); and

(3) Trace back to the batch or batches in which the gasoline was produced or imported. Obtain the refiner's or importer's internal laboratory analyses for each batch and compare such analyses for consistency with the analyses results reported to EPA and to the time and place designations for the tender's product transfer documents.

(e) Select a representative sample from the listing of RBOB tenders, and for this sample:

(1) Agree the volumes to the original product transfer documents;

(2) Determine that the requisite contract was in place with the downstream blender designating the required blending procedures, or that the refiner or importer accounted for the RBOB using the assumptions in § 80.69(a)(8) in the case of RBOB designated as ''any oxygenate,'' or ''ether only,'' or using the assumptions in §§ 80.83(c)(1)(ii) (A) and (B) in the case of RBOB designated as ''any renewable oxygenate,'' ''non VOC controlled renewable ether only,'' or ''renewable ether only'';

(3) Review the product transfer documents for the indication of the type and amount of oxygenate required to be added to the RBOB;

(4) Trace back to the batch or batches in which the RBOB was produced or imported. Obtain refiner's or importer's internal lab analysis for each batch and agree the consistency of the type and volume of oxygenate required to be added to the RBOB with that indicated in applicable tender's product transfer documents;

(5) Agree the sampling and testing frequency of the refiner's or importer's downstream oxygenated blender quality assurance program with the sampling and testing rates as required in § 80.69(a)(7); and

(6) In the case of RBOB designated as ''any renewable oxygenate,'' ''non VOC controlled renewable ether'' or ''renewable ether only'', review the documentation from the producer of the oxygenate to determine if the oxygenate meets the requirements of § 80.83(a).

(f) Select a representative sample of reformulated gasoline and RBOB batches produced by computerized inline blending, and for this sample:

(1) Obtain the composite sample internal laboratory analyses results; and

(2) Agree the results of the internal laboratory analyses to the quarterly batch information submitted to the EPA.

(g) Select a representative sample from the listing of the tenders of conventional gasoline and conventional gasoline blendstock that becomes gasoline through the addition of oxygenate only, and for this sample:

(1) Agree the volumes to the product transfer documents;

(2) For a representative sample of tenders, trace back to the batch or batches in which the gasoline was produced or imported. Obtain the refiner's or importer's internal laboratory analyses for each batch and compare such analyses for consistency with the analyses results reported to EPA; and

(3) Where the refiner or importer has included oxygenate that is blended downstream of the refinery or import facility in its compliance calculations in accordance with § 80.101(d)(4)(ii), obtain a listing of each downstream oxygenate blending operation from which the refiner or importer is claiming oxygenate for use in compliance calculations, and for each such operation:

(i) Determine if the refiner or importer had a contract in place with the downstream blender during the period oxygenate was blended;

(ii) Determine if the refiner or importer has records reflecting that it conducted physical inspections of the downstream blending operation during the period oxygenate was blended;

(iii) Obtain a listing from the refiner or importer of the batches of conventional gasoline or conventional sub-octane blendstock, and the compliance calculations which include oxygenate blended by the downstream oxygenate blender, and test the mathematical accuracy of the calculations contained in this listing;

(iv) Obtain a listing from the downstream oxygenate blender of the oxygenate blended with conventional gasoline or sub-octane blendstock that was produced or imported by the refiner or importer. Test the mathematical accuracy of the calculations in this listing. Agree the overall oxygenate blending listing obtained from the refiner or importer with the listing obtained from the downstream oxygenate blender. Select a representative sample of oxygenate blending listing obtained from the downstream oxygenate blender, and for this sample:

(A) Using product transfer documents, determine if the oxygenate was blended with conventional gasoline or conventional sub-octane blendstock that was produced by the refiner or imported by the importer; and

(B) Agree the oxygenate volume with the refiner's or importer's listing of oxygenate claimed for this gasoline;

(v) Obtain a listing of the sampling and testing conducted by the refiner or importer over the downstream oxygenate blending operation. Select a representative sample of the test results from this listing, and for this sample agree the tested oxygenate volume with the oxygenate use listings from the refiner or importer, and from the oxygenate blender; and

(vi) Obtain a copy of the records reflecting the refiner or importer audit over the downstream oxygenate blending operation. Review these records for indications that the audit included review of the overall volumes and type of oxygenate purchased and used by the

oxygenate blender to be consistent with the oxygenate claimed by the refiner or importer and that this oxygenate was blended with the refiner's or importer's gasoline or blending stock.

(h) In the case of a refiner or importer that is not exempt from blendstock tracking under § 80.102(f):

(1) Obtain listings for those tenders of non-finished-gasoline classified by the refiner or importer as:

(i) Applicable blendstock which is included in the refiner's or importer's blendstock tracking calculations pursuant to § 80.102(b) through (d);

(ii) Applicable blendstock which is exempt pursuant to § 80.102(d)(3) from inclusion in the refiner's or importer's blendstock tracking calculations pursuant to § 80.102 (b) through (d); and

(iii) All other non-finished-gasoline petroleum products.

(2) Test the mathematical accuracy of the calculations contained in the analysis.

(3) Agree the listings of tenders' volumes to the gasoline inventory reconciliation in paragraph (b) of this section.

(4) Agree the EPA report for the volume classified as applicable blendstock pursuant to the requirements of § 80.102.

(5) Select a representative sample from the listing of applicable blendstock which is reported to EPA, and for such sample:

(i) Agree the volumes to records supporting the transfer of the tender to another person; and

(ii) Trace back to the batch or batches in which the non-finished-gasoline petroleum product was produced or imported. Obtain the refiner's or importer's internal laboratory analysis for each batch and compare such analysis for consistency with the product type assigned by the refiner or importer (e.g., reformate, light coker naphtha, etc.), and that this product type is included in the applicable blendstock list at § 80.102(a).

(6) Select a representative sample from the listing of applicable blendstock which is exempt from inclusion in the blendstock tracking report to EPA, and for such sample:

(i) Agree the volumes to records supporting the transfer of the tender to another person;

(ii) Trace back to the batch or batches in which the non-finished-gasoline petroleum product was produced or imported. Obtain the refiner's or importer's internal laboratory analysis for each batch and compare such analysis for consistency with the product type assigned by the refiner or importer (e.g., reformate, light coker naphtha, etc.), and that this product type is included in the applicable blendstock list at § 80.102(a); and

(iii) Obtain the documents that demonstrate the purpose for which the product was used, and agree that the documented purpose is one of those specified at § 80.102(d)(3).

(7) Select a representative sample from the listing of all other non-finished-gasoline petroleum products, and for such sample:

(i) Agree the volumes to records supporting the transfer of the tender to another person;

(ii) Trace back to the batch or batches in which the non-finished-gasoline petroleum product was produced or imported. Obtain the refiner's or importer's internal laboratory analysis for each batch and compare such analysis for consistency with the product-type assigned by the refiner or importer (e.g., alkylate, isobutane, etc.), and agree that this product type is excluded from the applicable blendstock list at § 80.102(a).

(i) In the case of a refiner or importer required to account for blendstocks produced or imported under § 80.102(e)(2):

(1) Obtain listings for those tenders of non-finished-gasoline tenders classified by the refiner or importer as:

(i) Blendstock which is included in the compliance calculations for the refinery or importer; and

(ii) All other non-finished-gasoline petroleum products;

(2) Test the mathematical accuracy of the calculations contained in the listings under paragraph (i)(1) of this section;

(3) Agree the listings of tenders' volumes to the gasoline inventory reconciliation in paragraph (b) of this section;

(4) Select a representative sample from the listing of blendstock tenders which are included in the compliance calculations for the refinery or importer, and for such sample:

(i) Agree the volumes to records supporting the transfer of the tender to another person;

(ii) Review the product transfer documents for the statement indicating the blendstock has been accounted-for, and may not be included in another party's compliance calculations; and

(iii) Trace back to the batch or batches in which the blendstock was produced or imported. Obtain the refiner's or importer's internal laboratory analyses for each batch and compare such analyses for consistency with the analyses results reported to EPA; and

(5) Select a representative sample from the listing of tenders of non-finished-gasoline petroleum products that are excluded from the refiner's or importer's compliance calculations, and for such sample confirm that documents demonstrate the petroleum products were used for a purpose other than the production of gasoline within the United States.

[59 FR 7875, Feb. 16, 1994, as amended at 59 FR 36969, July 20, 1994; 59 FR 39292, Aug. 2, 1994; 62 FR 60136, Nov. 6, 1997]

EFFECTIVE DATE NOTE: At 59 FR 39292, Aug. 2, 1994, § 80.128 was amended by revising paragraphs (a) and (e)(2); removing ''and'' at the end of paragraph (e)(4); removing the period at the end of paragraph (e)(5) and adding ''; and'' in its place; and adding paragraph (e)(6) effective September 1, 1994. At 59 FR 60715, Nov. 28, 1994, the amendment was stayed effective September 13, 1994.

§ 80.129 Agreed upon procedures for downstream oxygenate blenders.

The following are the procedures to be carried out at each oxygenate blending facility that is subject to the requirements of this subpart F:

(a) Read the oxygenate blender's reports filed with the EPA for the previous year as required by §§ 80.75 and 80.83(g).

(b) Obtain a material balance analysis summarizing receipts of RBOB and oxygenate to the blender, and the deliveries of reformulated gasoline from the blender.

(1) Test the mathematical accuracy of the calculations contained in the analysis.

(2) Agree the beginning and ending inventory to the blender's perpetual inventory records.

(3) Agree the analysis, where applicable, to the EPA reports.

(c) Obtain a listing of all RBOB receipts for the previous year.

(1) Test the mathematical accuracy of the volumetric calculations contained in the listing.

(2) Agree the volumetric calculations of RBOB receipts to the calculations contained in the material balance analysis.

(3) Select a representative sample of RBOB receipts from the listing. Review the product transfer documents for the indication of the type and volume of oxygenate required to be added to the RBOB.

(d) Obtain a listing of all reformulated gasoline batches produced by the blender during the previous year.

(1) Test the mathematical accuracy of the volumetric calculations contained in the listing.

(2) Agree the volumetric calculations contained in the listing to the calculations contained in the material balance analysis.

(3) Select a representative sample of the batches from the listing, and for these batches:

(i) Obtain the blender's records that indicate the volume and type of oxygenate that was blended, the volume of RBOB that was blended and the product transfer documents for the RBOB, and the internal lab analysis where applicable;

(ii) Agree the consistency of the type and volume of oxygenate added to the RBOB with that indicated to be added in the RBOB's product transfer documents;

(iii) In the case of RBOB designated as ''any renewable oxygenate,'' ''non VOC controlled renewable ether only,'' or ''renewable ether only,'' review the documentation from the producer of the oxygenate to determine if the oxygenate meets the requirements of § 80.83(a);

(iv) Recalculate the actual oxygen content based on the volumes blended

and agree to the report to EPA on oxygen; and

(v) Review the time and place designations in the product transfer documents prepared for the batch by the blender, for consistency with the time and place designations in the product transfer documents for the RBOB (e.g. VOC-controlled or non-VOC-controlled, VOC region for VOC-controlled, and simple or complex model).

(e) Agree the sampling and testing frequency of the blender's quality assurance program with the sampling and testing rates required in § 80.69.

[59 FR 7875, Feb. 16, 1994, as amended at 59 FR 36969, July 20, 1994; 59 FR 39292, Aug. 2, 1994; 62 FR 60136, Nov. 6, 1997]

EFFECTIVE DATE NOTE: At 59 FR 39292, Aug. 2, 1994, § 80.129 was amended by revising paragraphs (a), (d)(3)(iii) and (d)(3)(iv), and adding paragraph (d)(3)(v) effective September 1, 1994. At 59 FR 60715, Nov. 28, 1994, the amendment was stayed effective September 13, 1994.

§ 80.130 Agreed upon procedures reports.

(a) *Reports*. (1) The CPA or CIA shall issue to the refiner, importer, or blender a report summarizing the procedures performed and the findings in accordance with the attest engagement or internal audit performed in compliance with this subpart.

(2) The refiner, importer or blender shall provide a copy of the auditor's report to the EPA within the time specified in § 80.75(m).

(b) *Record retention*. The CPA or CIA shall retain all records pertaining to the performance of each agreed upon procedure and pertaining to the creation of the agreed upon procedures report for a period of five years from the date of creation and shall deliver such records to the Administrator upon request.

§§ 80.131–80.135 [Reserved]

Subpart G—Detergent Gasoline

SOURCE: 59 FR 54706, Nov. 1, 1994, unless otherwise noted.

§ 80.140 Definitions.

The definitions in this section apply only to subpart G of this part. Any terms not defined in this subpart shall have the meaning given them in 40 CFR part 80, subpart A, or, if not defined in 40 CFR part 80, subpart A, shall have the meaning given them in 40 CFR part 79, subpart A.

Additization means the addition of detergent to gasoline or post-refinery component in order to create detergent-additized gasoline or detergent-additized post-refinery component.

Automated detergent blending facility means any facility (including, but not limited to, a truck or individual storage tank) at which detergent is blended with gasoline or post-refinery component, by means of an injector system calibrated to automatically deliver a prescribed amount of detergent.

Base gasoline means any gasoline that does not contain detergent.

Carburetor deposits means the deposits formed in the carburetor during operation of a carburetted gasoline engine which can disrupt the ability of the carburetor to maintain the proper air/fuel ratio.

Carrier of detergent means any distributor of detergent who transports or stores or causes the transportation or storage of detergent without taking title to or otherwise having any ownership of the detergent, and without altering either the quality or quantity of the detergent.

Deposit control effectiveness means the ability of a detergent additive package to prevent the formation of deposits in gasoline engines.

Deposit control efficiency means the degree to which a detergent additive package at a given concentration in gasoline is effective in limiting the formation of deposits. The addition of inactive ingredients to a detergent additive package, to the extent that this addition dilutes the concentration of the detergent-active components, reduces the deposit control efficiency of the package.

Detergent additive package means any chemical compound or combination of chemical compounds, including carrier oils, that may be added to gasoline, or to post-refinery component blended with gasoline, in order to control deposit formation. Carrier oil means an oil that may be added to the package to mediate or otherwise enhance the detergent chemical's ability to control

deposits. A detergent additive package may contain non-detergent-active components such as corrosion inhibitors, antioxidants, metal deactivators, and handling solvents.

Detergent blender means any person who owns, leases, operates, controls or supervises the blending operation of a detergent blending facility, or imports detergent-additized gasoline or detergent-additized post-refinery component.

Detergent blending facility means any facility (including, but not limited to, a truck or individual storage tank) at which detergent is blended with gasoline or post-refinery component.

Detergent-active components means the components of a detergent additive package which act to prevent the formation of deposits, including, but not necessarily limited to, the actual detergent chemical and any carrier oil (if present) that acts to enhance the detergent's ability to control deposits.

Detergent-additized gasoline (also called *detergent gasoline*) means any gasoline that contains base gasoline and detergent.

Detergent-additized post-refinery component means any post-refinery component that contains detergent.

Distributor of detergent means any person who transports or stores or causes the transportation or storage of detergent at any point between its manufacture and its introduction into gasoline.

Fuel injector deposits (also known as *port fuel injector deposits* or *PFID*) means the deposits formed on fuel injector(s) during and after operation of a gasoline engine, as evaluated by the reduction in the gasoline flow rate through the fuel injector(s).

Gasoline means any fuel for use in motor vehicles and motor vehicle engines, including both highway and off-highway vehicles and engines, and commonly or commercially known or sold as gasoline. The term ''gasoline'' is inclusive of base gasoline, detergent gasoline, and base gasoline or detergent gasoline that has been commingled with post-refinery component.

Hand blending detergent facility means any facility (including, but not limited to, a truck or individual storage tank) at which detergent is blended with gasoline or post-refinery component by the manual addition of detergent, or at which detergent is blended with these substances by any means that is not automated.

Intake valve deposits (*IVD*) means the deposits formed on the intake valve(s) during operation of a gasoline engine, as evaluated by weight.

Leaded gasoline means gasoline which is produced with the use of any lead additive or which contains more than 0.05 gram of lead per gallon or more than 0.005 gram of phosphorus per gallon.

Manufacturer of detergent means any person who owns, leases, operates, controls, or supervises a facility that manufactures detergent. Pursuant to the definition in 40 CFR 79.2(f), a manufacturer of detergent is also considered an additive manufacturer.

Post-refinery component means any gasoline blending stock or any oxygenate which is blended with gasoline subsequent to the gasoline refining process.

Repeatability of a test method means the amount of random error which is expected to affect the results obtained for a given test substance, when the test is replicated by a single operator in a given laboratory within a short period of time, using the same apparatus under constant operating conditions. Quantitatively, it is the difference between two such single results that would be exceeded in the long run in only one out of twenty normal and correct replications of the test method.

[59 FR 54706, Nov. 1, 1994, as amended at 61 FR 35356, July 5, 1996]

§ 80.141 Interim detergent gasoline program.

(a) *Effective dates of requirements.* (1) Until June 30, 1997, the products listed in paragraphs (a)(1)(i) through (iii) of this section must comply with either the interim program requirements described in this section or the certification program requirements described in § 80.161. Beginning July 1, 1997, the listed products must comply with the requirements in § 80.161. These dates and requirements apply to:

(i) All gasoline sold or transferred to a party who sells or transfers gasoline to the ultimate consumer;

(ii) All additized post-refinery component (PRC); and

(iii) All detergent additives sold or transferred for use in gasoline or PRC for compliance with the requirements of this subpart.

(2) Until July 31, 1997, all gasoline sold or transferred to the ultimate consumer must contain detergent additive(s) meeting either the interim requirements of this § 80.141 or the certification program requirements of § 80.161. Beginning August 1, 1997, such gasoline must contain detergent additive(s) meeting the certification requirements of § 80.161.

(b) *Applicability of gasoline and PRC detergency requirement; responsible parties.* (1) Except as specifically exempted in § 80.160, the detergency requirements of this subpart apply to all gasoline, whether intended for on-highway or nonroad use, including conventional, reformulated, oxygenated, and leaded gasolines, as well as the gasoline component of fuel mixtures of gasoline and alcohol fuels, gasoline used as marine fuel, gasoline service accumulation fuel (as described in § 86.113–94(a)(1) of this chapter), the gasoline component of fuel mixtures of gasoline and methanol used for service accumulation in flexible fuel vehicles (as described in § 86.113–94(d) of this chapter), gasoline used for factory fill purposes, and all additized PRC.

(2) Pursuant to paragraphs (c) through (f) of this section, compliance with these requirements is the responsibility of parties who directly or indirectly sell or dispense gasoline to the ultimate consumer as well as parties who manufacture, supply, or transfer detergent additives or detergent-additized post-refinery components.

(c) *Detergent registration requirements.* To be eligible for use by fuel manufacturers in complying with the gasoline detergency requirements of this subpart, a detergent additive package must be registered by its manufacturer under 40 CFR part 79 according to the specifications in paragraphs (c) (1) through (3) of this section. After evaluating the adequacy of registration data provided by the detergent manufacturer pursuant to these requirements, if EPA finds the data to be deficient, EPA may disqualify the detergent package for use in complying with the gasoline detergency requirements of this subpart, under the provisions of paragraph (g) of this section.

(1) *Compositional data.* The compositional data supplied to EPA by the additive manufacturer for purpose of registering a detergent additive package under § 79.21(a) of this chapter must include:

(i) A complete listing of the components of the detergent additive package, using standard chemical nomenclature when possible or providing the chemical structure of any component for which the standard chemical name is not precise. Polymeric components may be reported as the product of other chemical reactants, provided that the supporting data specified in § 80.162(b) is also reported for such components.

(ii) The weight and/or volume percent (as applicable) of each component of the package, with variability in these amounts restricted according to the provisions of paragraph (c)(2) of this section.

(iii) For each detergent-active component of the package, classification into one of the following designations:

(A) Polyalkyl amine;

(B) Polyether amine;

(C) Polyalkylsuccinimide;

(D) Polyalkylaminophenol;

(E) Detergent-active carrier oil; and

(F) Other detergent-active component.

(2) *Allowable variation in compositional data.* (i) A single detergent additive registration may contain no variation in the identity of any of the detergent-active components identified pursuant to paragraph (c)(1)(iii) of this section.

(ii) A single detergent additive registration may specify a range of concentrations for identified detergent-active components, provided that, if each such component were present in the detergent additive package at the lower bound of its reported range of concentration, the minimum recommended concentration reported in accordance with the requirements of paragraph (c)(3) of this section would still provide the deposit control effectiveness claimed by the detergent registrant.

(iii) The identity or concentration of non-detergent-active components of the detergent additive package may

vary under a single registration, provided that the range of such variation is specified in the registration, and that such variability does not reduce the deposit control effectiveness of the additive package as compared with the level of effectiveness claimed by the detergent registrant pursuant to the requirements of paragraph (c)(3) of this section.

(iv) Except as provided in paragraph (c)(2)(v) of this section, detergent additive packages which do not satisfy these restrictions must be separately registered. EPA may disqualify an additive for use in satisfying the requirements of this subpart if EPA determines that the variability included within a given detergent additive registration may reduce the deposit control effectiveness of the detergent package such that it could invalidate the minimum recommended concentration reported in accordance with the requirements of paragraph (c)(3) of this section.

(v) A change in minimum concentration requirements resulting from a modification of detergent additive composition shall not require a new detergent additive registration or a change in existing registration if:

(A) The modification is effected by a detergent blender only for its own use or for the use of parties which are subsidiaries of, or share common ownership with, the blender, and the modified detergent is not sold or transferred to other parties; and

(B) The modification is a dilution of the additive for the purpose of ensuring proper detergent flow in cold weather; and

(C) Gasoline is the only diluting agent used; and

(D) The diluted detergent is subsequently added to gasoline at a rate that attains the detergent's registered minimum recommended concentration, taking into account the dilution; and

(E) EPA is notified, either before or within seven days after the dilution action, of the identity of the detergent, the identity of the diluting material, the amount or percentage of the dilution, the change in treat rate necessitated by the dilution, and the locations and time period of diluted detergent usage. The notification shall be sent or faxed to the address in § 80.174(c).

(3) *Minimum recommended concentration.* (i) The lower boundary of the recommended range of concentration for the detergent additive package in gasoline, which the additive manufacturer must report pursuant to the registration requirements in § 79.21(d) of this chapter, must equal or exceed the minimum concentration which the manufacturer has determined to be necessary for the control of deposits in the associated fuel type, pursuant to paragraph (e) of this section. The minimum recommended concentration shall be provided to EPA in units of gallons of detergent additive package per thousand gallons of gasoline or PRC, reported to four digits. This concentration is the lowest additive concentration (LAC) referred to elsewhere in this subpart.

(ii) The minimum concentration reported in the detergent registration according to the provisions of paragraph (c)(3)(i) of this section must also be communicated in writing by the additive manufacturer to each fuel manufacturer who purchases the subject detergent for purpose of compliance with the gasoline detergency requirements of this subpart, and to any additive manufacturer who purchases the subject additive with the intent of reselling it to a fuel manufacturer for this purpose.

(iii) Pursuant to the requirements of paragraph (e) of this section, EPA may require the additive manufacturer to submit data to support the deposit control effectiveness of the detergent package at the specified minimum effective concentration. EPA may disqualify an additive for use in satisfying the requirements of this subpart upon finding that the supporting data is inadequate. Manufacturers may be subject to the liabilities and enforcement actions in §§ 80.156 and 80.159 if such a finding is made.

(iv) Once included in the registration for a detergent additive package, the minimum concentration recommended by the detergent manufacturer to detergent blenders and other users of the detergent additive, pursuant to paragraph (c)(3)(ii) of this section, may not be changed without first notifying

EPA. The notification must be sent by certified mail to the address specified in § 80.174(b). Changes to the minimum recommended concentration must be supported by available test data pursuant to paragraph (c)(3)(iii) of this section.

(v) A manufacturer may use a single set of test data to demonstrate the deposit control effectiveness of more than one registered detergent additive product, provided that:

(A) The additive products contain all of the same detergent-active components and no detergent-active components other than those contained in common; and

(B) The minimum concentration recommended for the use of each such additive product is specified such that, when each additive product is mixed in gasoline at the recommended concentration, each of its detergent-active components will be present at a final concentration no less than the lowest concentration for that component shown to be effective by the data available for the tested additive product.

(d) The rate at which a detergent blender treats gasoline with a detergent additive package must be no less than the minimum recommended concentration reported for the subject detergent additive pursuant to paragraph (c)(3) of this section, except under the following conditions:

(1) If a detergent blender believes that the minimum treat rate recommended by the manufacturer of a detergent additive exceeds the amount of detergent actually required for effective deposit control, and possesses substantiating data consistent with the guidelines in paragraph (e) of this section, then, upon informing EPA in writing of these circumstances, the detergent blender may use the detergent at a lower concentration.

(2) The notification to EPA must clearly specify the name of the detergent product and its manufacturer, the concentration recommended by the detergent manufacturer, and the lower concentration which the detergent blender intends to use. The notification must also attest that data are available to substantiate the deposit control effectiveness of the detergent at the intended lower concentration. The notification must be sent by certified mail to the address specified in § 80.174(b).

(3) At its discretion, EPA may require that the detergent blender submit the test data purported to substantiate the claimed effectiveness of the lower concentration of the detergent additive. EPA may also require the manufacturer of the subject detergent additive to submit test data substantiating the minimum recommended concentration specified in the detergent additive registration. In either case, EPA will send a letter to the appropriate party, and the supporting data will be due to EPA within 30 days of receipt of EPA's letter.

(i) If the detergent blender fails to submit the required supporting data to EPA in the allotted time period, or if EPA judges the submitted data to be inadequate to support the detergent blender's claim that the lower concentration provides a level of deposit control consistent with the requirements of this section, then EPA will disapprove the use of the detergent at the lower concentration. Further, the detergent blender may be subject to applicable liabilities and penalties pursuant to §§ 80.156 and 80.159 for any gasoline or PRC it has additized at the lower concentration.

(ii) If the detergent manufacturer fails to submit the required test data to EPA within the allotted time period, EPA will proceed on the assumption that data are not available to substantiate the minimum recommended concentration specified in the detergent registration, and the subject additive may be disqualified for use in complying with the requirements of this subpart, pursuant to the procedures in paragraph (g) of this section. The detergent manufacturer may also be subject to applicable liabilities and penalties pursuant to §§ 80.156 and 80.159.

(iii) If both parties submit the required information, EPA will evaluate the quality and results of both sets of test data in relation to each other and to industry-consensus test practices and standards, in a manner consistent with the guidelines described in paragraph (e) of this section. EPA will approve or disapprove the use of the detergent at the lower concentration, and will inform both the detergent blender

and the detergent manufacturer of the results of its analysis within 60 days of receipt of both sets of data.

(e) *Demonstration of deposit control efficiency*. At its discretion, EPA may require a detergent additive registrant to provide test data to support the deposit control effectiveness of a detergent at the minimum concentration recommended, pursuant to paragraph (c)(3) of this section and § 79.21(d) of this chapter. The required supporting data must be submitted to EPA within 30 days of receipt of EPA's request. EPA will notify the submitter, within 60 days after receiving the supporting data, whether the data is adequate to support the deposit control efficiency claimed. Subject to the procedures specified in paragraph (g) of this section, if the supporting data are not submitted or if EPA finds the data insufficient, the detergent may be disqualified for use by fuel manufacturers in complying with the requirements of this subpart. EPA will use the following guidelines in determining the adequacy of the supporting data:

(1) *CARB-based supporting test data*. For detergent additives which are certified by the California Air Resources Board (CARB) for use in the State of California (pursuant to Title 13, section 2257 of the California Code of Regulations), the CARB certification data constitutes adequate support of the detergent's effectiveness under this section, with the exception that CARB detergent certification data specific to California Phase II reformulated gasoline (pursuant to Title 13, Chapter 5, Article 1, Subarticle 2, California Code of Regulations, Standards for Gasoline Sold Beginning March 1, 1996) will not be considered adequate support for detergent effectiveness in gasolines that do not conform to the compositional specifications for California's Phase II reformulated gasoline. For CARB-based supporting data to be used to demonstrate detergent performance, the minimum recommended concentration reported in the detergent additive registration must be no less than the concentration of the detergent-active components reported in the subject CARB detergent certification.

(2) EPA will evaluate the adequacy of other supporting data according to the following guidelines:

(i) Test fuel guidelines.

(A) The gasoline used in the supporting tests must contain the detergent-active components of the subject detergent additive package in an amount which corresponds to the minimum recommended concentrations recorded in the respective detergent registration, or less than this amount.

(B) The test fuels must not contain any detergent-active components other than those recorded in the subject detergent registration.

(C) The test fuels used must be reasonably typical of in-use fuels in their tendency to form deposits. Test fuel taken directly from commercial refinery production stock is acceptable. Specially refined low-deposit-forming fuels such as indolene are not acceptable. Other specially blended test fuels will be evaluated by EPA for acceptability based on the extent to which such fuels adequately represent the deposit-forming tendency of typical (average) in-use fuels, as reflected in the levels of the following fuel parameters: sulfur content, aromatic content, olefin content, T–90, and oxygenate content.

(D) The composition of the blended test fuel(s) used in carburetor deposit control testing, conducted to support the claimed effectiveness of detergents used in leaded gasoline, should be reasonably typical of in-use gasoline in its tendency to form carburetor deposits (or more severe than typical in-use fuels) as defined by the olefin and sulfur content. Test data using leaded fuels is preferred for this purpose, but data collected using unleaded fuels may also be acceptable provided that some correlation with additive performance in leaded fuels is available.

(ii) Test procedure guidelines.

(A) To be acceptable, test data submitted to support the deposit control effectiveness of a detergent additive must derive from testing conducted in conformity with good engineering practices.

(B) For demonstration of fuel injector and intake valve deposit control performance, the tests specified in §§ 80.165, or other vehicle-based tests

using generally accepted industry procedures and standards, are preferred. Engine-based tests may also be acceptable, assuming a reasonable correlation with vehicle-based tests and standards can be demonstrated. Bench test data may be acceptable to demonstrate fuel injector deposit control performance, assuming the results can be correlated with vehicle- or engine-based tests and standards. Bench testing will not be considered acceptable for demonstration of IVD control performance. Examples of acceptable test procedures are contained in the following references:

(*1*) Intake Valve Deposit Test Procedures:

(*i*) ''Intake Valve Deposits—Fuel Detergency Requirements Revisited'', Bill Bitting et al., Society of Automotive Engineers, SAE Technical Paper No. 872117, 1987.[1]

(*ii*) ''BMW—10,000 Miles Intake Valve Test Procedure'', March 1, 1991, Section 2257, Title 13, California Code of Regulations.

(*iii*)

(*iv*) ''Effect on Intake Valve Deposits of Ethanol and Additives Common to the Available Ethanol Supply'', Clifford Shilbolm et al., SAE Technical Paper Series No. 902109, 1990.

(*2*) Fuel Injector Deposit Test Procedures:

(*i*) ''Test Method for Evaluating Port Fuel Injector (PFI) Deposits in Vehicle Engines'', March 1, 1991, Section 2257, Title 13, California Code of Regulations.

(*ii*) ''A Vehicle Test Technique for Studying Port Fuel Injector Deposits—A Coordinating Research Council Program'', Robert Tupa et al., SAE Technical paper No. 890213, 1989.

(*iii*) ''The Effects of Fuel Composition and Additives on Multiport Fuel Injector Deposits'', Jack Benson et al., SAE Technical Paper Series No. 861533, 1986.

(*iv*) ''Injector Deposits—The Tip of Intake System Deposit Problems'', Brian Taneguchi, et al., SAE Technical Paper Series No. 861534, 1986.

(C) For demonstration of carburetor deposit control performance, any generally accepted vehicle, engine, or bench test procedure for carburetor deposit control will be considered adequate. Port and throttle body fuel injector deposit control test data will also be considered to be adequate demonstration of an additive's ability to control carburetor deposits. Examples of acceptable test procedures for demonstration of carburetor deposit control, in addition to the fuel injector test procedures listed above in paragraph (e)(2)(ii)(B)(*2*) of this section, are contained in the following references:

(*1*) ''Fuel Injector, Intake Valve, and Carburetor Detergency Performance of Gasoline Additives'', C.H. Jewitt et al., SAE Technical Paper No. 872114, 1987.

(*2*) ''Carburetor Cleanliness Test Procedure, State-of-the-Art Summary, Report: 1973–1981'', Coordinating Research Council, CRC Report No. 529.[3]

(f) *Detergent identification test procedure.* (1) At its discretion, EPA may require the additive registrant to submit an analytical procedure capable of identifying the detergent additive in its pure state. The test procedure will be due to EPA within 30 days of the registrant's receipt of the request. Subject to the provisions in paragraph (g) of this section, if the registrant fails to submit an analytical procedure, or if EPA judges a submitted procedure to be inadequate, EPA may deny or withdraw the detergent's eligibility to be used to satisfy the detergency requirements in this section.

(2) The analytical procedure submitted by the registrant must be able to both qualitatively and quantitatively identify each component of the detergent additive package. To be acceptable, the procedure must provide results that conform to reasonable and customary standards of repeatability and reproducibility, and reasonable and customary limits of detection and accuracy, for the type of test in question.

(3) A fourier transform infrared spectroscopy (FTIR)-based procedure, including an actual infrared spectrum of the detergent additive package and each component part of the detergent

[1] Society of Automotive Engineers (SAE), 400 Commonwealth Drive, Warrendale, PA 15096–0001.

[2] [Reserved]

[3] Coordinating Research Council Inc. (CRC), 219 perimeter Center Parking, Atlanta, Georgia, 30346.

package obtained from this test method, is preferred.

(g) *Disqualification of a detergent additive package.* (1) When EPA makes a preliminary determination that a detergent additive registrant has failed to comply with the requirements of paragraph (c), (d)(3)(ii), (e), or (f) of this section, either by failing to submit required information for a subject detergent additive or by submitting information which EPA deems inadequate, EPA shall notify the additive registrant by certified mail, return receipt requested, setting forth the basis for that determination and informing the registrant that the detergent may lose its eligibility to be used to comply with the detergency requirements of this section.

(2) If EPA determines that the detergent registration was created by fraud or other misconduct, such as a negligent disregard for the truthfulness or accuracy of the required information or of the application, the detergent registration will be considered void *ab initio* and the revocation of qualification will be retroactive to January 1, 1995 or the date on which the additive product was first registered, whichever is later.

(3) The registrant will be afforded 60 days from the date of receipt of the notice of intent of detergent disqualification to submit written comments concerning the notice, and to demonstrate or achieve compliance with the specific data requirements which provide the basis for the proposed disqualification. If the registrant does not respond in writing within 60 days from the date of receipt of the notice of intent of disqualification, the detergent disqualification shall become final by operation of law and the Administrator shall notify the registrant of such disqualification. If the registrant responds in writing within 60 days from the date of receipt of the notice of intent to disqualify, the Administrator shall review and consider all comments submitted by the registrant before taking final action concerning the proposed disqualification. All correspondence regarding a disqualification must be sent to the address specified in § 80.174(b).

(4) As part of a written response to a notice of intent to disqualify, a registrant may request an informal hearing concerning the notice. Any such request shall state with specificity the information the registrant wishes to present at such a hearing. If an informal hearing is requested, EPA shall schedule such a hearing within 90 days from the date of receipt of the request. If an informal hearing is held, the subject matter of the hearing shall be confined solely to whether or not the registrant has complied with the specific data requirements which provide the basis for the proposed disqualification. If an informal hearing is held, the designated presiding officer may be any EPA employee, the hearing procedures shall be informal, and the hearing shall not be subject to or governed by 40 CFR part 22 or by 5 U.S.C. 554, 556, or 557. A verbatim transcript of each informal hearing shall be kept and the Administrator shall consider all relevant evidence and arguments presented at the hearing in making a final decision concerning a proposed cancellation.

(5) If a registrant who has received a notice of intent to disqualify submits a timely written response, and the Administrator decides after reviewing the response and the transcript of any informal hearing to disqualify the detergent for use in complying with the requirements of this subpart, the Administrator shall issue a final disqualification order, forward a copy of the disqualification order to the registrant by certified mail, and promptly publish the disqualification order in the FEDERAL REGISTER. Any disqualification order issued after receipt of a timely written response by the registrant shall become legally effective five days after it is published in the FEDERAL REGISTER.

(6) Upon making a final decision to disqualify a detergent additive package pursuant to this paragraph (g), EPA shall inform all fuel manufacturers and secondary additive manufacturers whose product registrations report the potential use of the disqualified detergent that such detergent is no longer eligible for compliance with the requirements of this subpart. Such fuel manufacturers and secondary additive manufacturers shall have 45 days in

which to stop using the ineligible detergent additive package and substitute an eligible detergent additive. When applicable, EPA shall also notify such parties that the detergent registration had been created by fraud or other misconduct, pursuant to paragraph (g)(2) of this section.

[59 FR 54706, Nov. 1, 1994, as amended at 61 FR 35356, July 5, 1996; 61 FR 58747, Nov. 18, 1996]

§§ 80.142–80.154 [Reserved]

§ 80.155 Interim detergent program controls and prohibitions.

(a)(1) No person shall sell, offer for sale, dispense, supply, offer for supply, transport, or cause the transportation of gasoline to the ultimate consumer for use in motor vehicles or in any off-road engines (except as provided in § 80.160), or to a gasoline retailer or wholesale purchaser-consumer, and no person shall detergent-additize gasoline, unless such gasoline is additized in conformity with the requirements of § 80.141. No person shall cause the presence of any gasoline in the gasoline distribution system unless such gasoline is additized in conformity with the requirements of § 80.141.

(2) Gasoline has been additized in conformity with the requirements of § 80.141 when the detergent component satisfies the requirements of § 80.141 and when:

(i) The gasoline has been additized in conformity with the detergent composition and purpose-in-use specifications of an applicable detergent registered under 40 CFR part 79, and in accordance with at least the minimum concentration specifications of that detergent as registered under 40 CFR part 79 or as otherwise provided under § 80.141(d); or

(ii) The gasoline is composed of two or more commingled gasolines and each component gasoline has been additized in conformity with the detergent composition and purpose-in-use specifications of a detergent registered under 40 CFR part 79, and in accordance with at least the minimum concentration specifications of that detergent as registered under 40 CFR part 79 or as otherwise provided under § 80.141(d); or

(iii) The gasoline is composed of a gasoline commingled with a post-refinery component (PRC), and both of these components have been additized in conformity with the detergent composition and use specifications of a detergent registered under 40 CFR part 79, and in accordance with at least the minimum concentration specifications of that detergent as registered under 40 CFR part 79 or as otherwise provided under § 80.141(d).

(b) No person shall blend detergent into gasoline or PRC unless such person complies with the volumetric additive reconciliation requirements of § 80.157.

(c) No person shall sell, offer for sale, dispense, supply, offer for supply, store, transport, or cause the transportation of any gasoline, detergent, or detergent-additized PRC unless the product transfer document for the gasoline, detergent or detergent-additized PRC complies with the requirements of § 80.158.

(d) No person shall refine, import, manufacture, sell, offer for sale, dispense, supply, offer for supply, store, transport, or cause the transportation of any detergent that is to be used as a component of detergent-additized gasoline or detergent-additized PRC, unless such detergent conforms with the composition specifications of a detergent registered under 40 CFR part 79 and the detergent otherwise complies with the requirements of § 80.141. No person shall cause the presence of any detergent in the detergent, PRC, or gasoline distribution systems unless such detergent complies with the requirements of § 80.141.

(e)(1) No person shall sell, offer for sale, dispense, supply, offer for supply, transport, or cause the transportation of detergent-additized PRC, unless the PRC has been additized in conformity with the requirements of § 80.141. No person shall cause the presence in the PRC or gasoline distribution systems of any detergent-additized PRC that fails to conform to the requirements of § 80.141.

(2) PRC has been additized in conformity with the requirements of § 80.141 when the detergent component satisfies the requirements of § 80.141 and:

(i) The PRC has been additized in accordance with the detergent composition and use specifications of a detergent registered under 40 CFR part 79, and in accordance with at least the minimum concentration specifications of that detergent as registered under 40 CFR part 79 or as otherwise provided under § 80.141(d); or

(ii) The PRC is composed of two or more commingled PRCs, and each component has been additized in accordance with the detergent composition and use specifications of a detergent registered under 49 CFR part 79, and in accordance with at least the minimum concentration specifications of that detergent as registered under 40 CFR part 79 or as otherwise provided under § 80.141(d).

[61 FR 35358, July 5, 1996]

§ 80.156 Liability for violations of the interim detergent program controls and prohibitions.

(a) *Persons liable*—(1) *Gasoline nonconformity*. Where gasoline contained in any storage tank at any facility owned, leased, operated, controlled or supervised by any gasoline refiner, importer, carrier, distributor, reseller, retailer, wholesale purchaser-consumer, oxygenate blender, or detergent blender, is found in violation of any of the prohibitions specified in § 80.155(a), the following persons shall be deemed in violation:

(i) Each gasoline refiner, importer, carrier, distributor, reseller, retailer, wholesale purchaser-consumer, oxygenate blender, or detergent blender, who owns, leases, operates, controls or supervises the facility (including, but not limited to, a truck or individual storage tank) where the violation is found;

(ii) Each gasoline refiner, importer, distributor, reseller, retailer, wholesale purchaser-consumer, oxygenate blender, detergent manufacturer, distributor, or blender, who refined, imported, manufactured, sold, offered for sale, dispensed, supplied, offered for supply, stored, detergent additized, transported, or caused the transportation of the detergent-additized gasoline (or the base gasoline component, the detergent component, or the detergent-additized post-refinery component of the gasoline) that is in violation, and each such party that caused the gasoline that is in violation to be present in the gasoline distribution system; and

(iii) Each gasoline carrier who dispensed, supplied, stored, or transported any gasoline in the storage tank containing gasoline found to be in violation, and each detergent carrier who dispensed, supplied, stored, or transported the detergent component of any post-refinery component or gasoline in the storage tank containing gasoline found to be in violation, provided that the EPA demonstrates, by reasonably specific showings by direct or circumstantial evidence, that the gasoline or detergent carrier caused the violation.

(2) *Post-refinery component non-conformity*. Where detergent-additized PRC contained in any storage tank at any facility owned, leased, operated, controlled or supervised by any gasoline refiner, importer, carrier, distributor, reseller, retailer, wholesale purchaser-consumer, oxygenate blender, detergent manufacturer, carrier, distributor, or blender, is found in violation of the prohibitions specified in § 80.155(e), the following persons shall be deemed in violation:

(i) Each gasoline refiner, importer, carrier, distributor, reseller, retailer, wholesale-purchaser consumer, oxygenate blender, detergent manufacturer, carrier, distributor, or blender, who owns, leases, operates, controls or supervises the facility (including, but not limited to, a truck or individual storage tank) where the violation is found;

(ii) Each gasoline refiner, importer, distributor, reseller, retailer, wholesale-purchaser consumer, oxygenate blender, detergent manufacturer, distributor, or blender, who sold, offered for sale, dispensed, supplied, offered for supply, stored, detergent additized, transported, or caused the transportation of the detergent-additized PRC (or the detergent component of the PRC) that is in violation, and each such party that caused the PRC that is in violation to be present in the PRC or gasoline distribution systems; and

(iii) Each carrier who dispensed, supplied, stored, or transported any detergent-additized post-refinery component

in the storage tank containing post-refinery component in violation, and each detergent carrier who dispensed, supplied, stored, or transported the detergent component of any detergent-additized post-refinery component which is in the storage tank containing detergent-additized post-refinery component found to be in violation, provided that the EPA demonstrates by reasonably specific showings by direct or circumstantial evidence, that the gasoline or detergent carrier caused the violation.

(3) *Detergent non-conformity*. Where the detergent (prior to additization) contained in any storage tank or container found at any facility owned, leased, operated, controlled or supervised by any gasoline refiner, importer, carrier, distributor, reseller, retailer, wholesale purchaser-consumer, oxygenate blender, detergent manufacturer, carrier, distributor, or blender, is found in violation of the prohibitions specified in § 80.155(d), the following persons shall be deemed in violation:

(i) Each gasoline refiner, importer, carrier, distributor, reseller, retailer, wholesale-purchaser consumer, oxygenate blender, detergent manufacturer, carrier, distributor, or blender, who owns, leases, operates, controls or supervises the facility (including, but not limited to, a truck or individual storage tank) where the violation is found;

(ii) Each gasoline refiner, importer, distributor, reseller, retailer, wholesale purchaser-consumer, oxygenate blender, detergent manufacturer, distributor, or blender, who sold, offered for sale, dispensed, supplied, offered for supply, stored, transported, or caused the transportation of the detergent that is in violation, and each such party that caused the detergent that is in violation to be present in the detergent, gasoline, or PRC distribution systems; and

(iii) Each gasoline or detergent carrier who dispensed, supplied, stored, or transported any detergent which is in the storage tank or container containing detergent found to be in violation, providing that EPA demonstrates, by reasonably specific showings by direct or circumstantial evidence, that the gasoline or detergent carrier caused the violation.

(4) *Volumetric additive reconciliation*. Where a violation of the volumetric additive reconciliation requirements established by § 80.155(b) has occurred, the following persons shall be deemed in violation:

(i) Each detergent blender who owns, leases, operates, controls or supervises the facility (including, but not limited to, a truck or individual storage tank) where the violation has occurred; and

(ii) Each gasoline refiner, importer, carrier, distributor, reseller, retailer, wholesale purchaser-consumer, or oxygenate blender, and each detergent manufacturer, carrier, distributor, or blender, who refined, imported, manufactured, sold, offered for sale, dispensed, supplied, offered for supply, stored, transported, or caused the transportation of the detergent-additized gasoline, the base gasoline component, the detergent component, or the detergent-additized post-refinery component, of the gasoline that is in violation, provided that the EPA demonstrates, by reasonably specific showings by direct or circumstantial evidence, that such person caused the violation.

(5) *Product transfer document*. Where a violation of § 80.155(c) is found at a facility owned, leased, operated, controlled, or supervised by any gasoline refiner, importer, carrier, distributor, reseller, retailer, wholesale purchaser-consumer, oxygenate blender, detergent manufacturer, carrier, distributor, or blender, the following persons shall be deemed in violation: each gasoline refiner, importer, carrier, distributor, reseller, retailer, wholesale-purchaser consumer, oxygenate blender, detergent manufacturer, carrier, distributor, or blender, who owns, leases, operates, control or supervises the facility (including, but not limited to, a truck or individual storage tank) where the violation is found.

(b) *Branded refiner vicarious liability*. Where any violation of the prohibitions specified in § 80.155 has occurred, with the exception of violations of § 80.155(c), a refiner will also be deemed liable for violations occurring at a facility operating under such refiner's corporate, trade, or brand name or that of any of its marketing subsidiaries. For purposes of this section, the word facility

includes, but is not limited to, a truck or individual storage tank.

(c) *Defenses.* (1) In any case in which a gasoline refiner, importer, distributor, carrier, reseller, retailer, wholesale-purchaser consumer, oxygenate blender, detergent distributor, carrier, or blender, is in violation of any of the prohibitions of § 80.155, pursuant to paragraphs (a) or (b) of this section as applicable, the regulated party shall be deemed not in violation if it can demonstrate:

(i) That the violation was not caused by the regulated party or its employee or agent (unless otherwise provided in this paragraph (c));

(ii) That product transfer documents account for the gasoline, detergent, or detergent-additized post-refinery component in violation and indicate that the gasoline, detergent, or detergent-additized post-refinery component satisfied relevant requirements when it left their control; and

(iii) That the party has fulfilled the requirements of paragraphs (c) (2) or (3) of this section, as applicable.

(2) *Branded refiner.* (i) Where a branded refiner, pursuant to paragraph (b) of this section, is in violation of any of the prohibitions of § 80.155 as a result of violations occurring at a facility (including, but not limited to, a truck or individual storage tank) which is operating under the corporate, trade or brand name of a refiner or that of any of its marketing subsidiaries, the refiner shall be deemed not in violation if it can demonstrate, in addition to the defense requirements stated in paragraph (c)(1) of this section, that the violation was caused by:

(A) An act in violation of law (other than these regulations), or an act of sabotage or vandalism, whether or not such acts are violations of law in the jurisdiction where the violation of the prohibitions of § 80.155 occurred; or

(B) The action of any gasoline refiner, importer, reseller, distributor, oxygenate blender, detergent manufacturer, distributor, blender, or retailer or wholesale purchaser-consumer supplied by any of these persons, in violation of a contractual undertaking imposed by the refiner designed to prevent such action, and despite the implementation of an oversight program, including, but not limited to, periodic review of product transfer documents by the refiner to ensure compliance with such contractual obligation; or

(C) The action of any gasoline or detergent carrier, or other gasoline or detergent distributor not subject to a contract with the refiner but engaged by the refiner for transportation of gasoline, post-refinery component, or detergent, to a gasoline or detergent distributor, oxygenate blender, detergent blender, gasoline retailer or wholesale purchaser consumer, despite specification or inspection of procedures or equipment by the refiner which are reasonably calculated to prevent such action.

(ii) In this paragraph (c)(2), to show that the violation ''was caused'' by any of the specified actions, the party must demonstrate by reasonably specific showings, by direct or circumstantial evidence, that the violation was caused or must have been caused by another.

(3) *Detergent blender.* In any case in which a detergent blender is liable for violating any of the prohibitions of § 80.155, the detergent blender shall not be deemed in violation if it can demonstrate, in addition to the defense requirements stated in paragraph (c)(1) of this section, the following:

(i) That it obtained or supplied, as appropriate, prior to the detergent blending, accurate written instructions from the detergent manufacturer or other party with knowledge of such instructions, specifying the detergent's minimum recommended concentration (lowest additive concentration) pursuant to § 80.141(c)(3) and, if applicable, the limitations of this concentration for use in leaded product.

(ii) That it has implemented a quality assurance program that includes, but is not limited to, a periodic review of its supporting product transfer and volume measurement documents to confirm the correctness of its product transfer and volumetric additive reconciliation documents created for all products it additized.

(4) *Detergent manufacturer*—(i) *Presumptive liability affirmative defense.* Notwithstanding the provisions of paragraph (c)(1) of this section, in any case in which a detergent manufacturer is liable for violating any of the

prohibitions of § 80.155, the detergent manufacturer shall be deemed not in violation if it can demonstrate each of the following:

(A) Product transfer documents which account for the detergent component of the product in violation and which indicate that such detergent satisfied all relevant requirements when it left the detergent manufacturer's control; and

(B) Written blending instructions which, pursuant to § 80.141(c)(3)(ii), were supplied by the detergent manufacturer to its customer who purchased or obtained from the manufacturer the detergent component of the product determined to be in violation. The written blending instructions must have been supplied by the manufacturer prior to the customer's use or sale of the detergent. The instructions must accurately identify the minimum recommended concentration (lowest additive concentration) specified in the detergent's 40 CFR part 79 registration, and must also accurately identify if the detergent, at that concentration, is only registered as effective for use in leaded gasoline.

(C) If the detergent batch used in the noncomplying product was produced less than one year before the manufacturer was notified by EPA of the possible violation, then the manufacturer must provide FTIR or other test results for the batch of detergent used in the noncomplying product, performed in accordance with the detergent testing procedure submitted by the manufacturer, or available for submission, pursuant to § 80.141(f).

(*1*) The analysis may have been conducted on the subject detergent batch at the time it was manufactured, or may be conducted on a sample of that batch which the manufacturer retained for such purpose at the time the batch was manufactured.

(*2*) The test results must accurately establish that, when it left the manufacturer's control, the detergent component of the product determined to be in violation was in conformity with the chemical composition and concentration specifications reported pursuant to § 80.141(c)(1);

(D) If the detergent batch used in the noncomplying product was produced more than one year prior to the manufacturer's notification by EPA of the possible violation, then the manufacturer must provide either:

(*1*) Test results for the batch in question as specified in the paragraph (c)(4)(i)(C) of this section; or

(*2*) The following materials:

(*i*) Documentation of the measured viscosity, density, and basic nitrogen content of the detergent batch in question, or any other such physical parameters which the manufacturer normally uses to ensure production quality control, which establishes conformity with the manufacturer's quality control standards for such parameters; and

(*ii*) If the detergent registration identifies polymeric component(s) of the detergent package as the product(s) of other chemical reactants, documentation that the reagents used to synthesize the detergent batch in question were the same as those specified in the registration and that they met the manufacturer's normal acceptance criteria for such reagents, reported pursuant to § 80.162(b)(1).

(ii) *Detergent manufacturer causation liability*. In any case in which a detergent manufacturer is liable for a violation of § 80.155, and the manufacturer establishes an affirmative defense to such liability pursuant to paragraph (c)(4)(i) of this section, the detergent manufacturer will nonetheless be deemed liable for the violation of § 80.155 if EPA can demonstrate, by reasonably specific showings by direct or circumstantial evidence, that the detergent manufacturer caused the violation.

(5) *Defense against liability where more than one party may be liable for VAR violations*. In any case in which a party is presumptively or vicariously liable for a violation of § 80.155 due to a failure to meet the VAR requirements § 80.157, except for the VAR record requirements pursuant to § 80.157(g), such party shall not be deemed liable if it can establish the following:

(i) Prior to the violation it had entered into a written contract with another potentially liable detergent blender party (''the assuming party''), under which that other party assumed legal responsibility for fulfilling the

VAR requirement that had been violated;

(ii) The contract included reasonable oversight provisions to ensure that the assuming party fulfilled its VAR responsibilities (including, but not limited to, periodic review of VAR records) and the oversight provision was actually implemented by the party raising the defense;

(iii) The assuming party is fiscally sound and able to pay its penalty for the VAR violation; and

(iv) The employees or agents of the party raising the defense did not cause the violation.

(6) *Defense to liability for gasoline nonconformity violations caused solely by the addition of misadditized ethanol or other PRC to the gasoline.* In any case in which a party is presumptively or vicariously liable for a gasoline non-conformity violation of § 80.155(a) caused solely by another party's addition of misadditized ethanol or other PRC to the gasoline, the former party shall not be deemed liable for the violation provided that it can establish that is has fulfilled the requirements of paragraphs (c)(1)(i) and (ii) of this section.

(7) *Detergent tank transitioning defenses.* The commingling of two detergents in the same detergent storage tank will not be deemed to violate or cause violations of any of the provisions of this subpart, provided the following conditions are met:

(i) The commingling must occur during a legitimate detergent transitioning event, *i.e.*, a shift from the use of one detergent to another through the delivery of the new detergent into the same tank that contains the original detergent; and

(ii) If the new detergent is restricted to use in leaded gasoline, then such restriction must be applied to the combined detergents; and

(iii) The commingling event must be documented, either on the VAR formula record or on attached supporting records; and

(iv) Notwithstanding any contrary provisions in § 80.157, a VAR formula record must be created for the combined detergents. The VAR compliance period must begin no later than the time of the commingling event. However, at the blender's option, the compliance period may begin earlier, thus including use of the uncombined original detergent within the same period, provided that the 31-day limitation pursuant to § 80.157(a)(6) is not exceeded; and

(v) The VAR formula record must also satisfy the requirements in one of the following paragraphs (c)(7)(v)(A) through (C) of this section, whichever applies to the commingling event. If neither paragraph (c)(7)(v)(A) nor (B) of this section initially applies, then the blender may drain and subsequently redeliver the original detergent into the tank in restricted amounts, in order to meet the conditions of paragraph (c)(7)(v)(A) or (B) of this section. Otherwise, the blender must comply with paragraph (c)(7)(v)(C) of this section.

(A) If both detergents have the same LAC, and the original detergent accounts for no more than 20 percent of the tank's total delivered volume after addition of the new detergent, then the VAR formula record is required to identify only the use of the new detergent.

(B) If the two detergents have different LACs and the original detergent accounts for 10 percent or less of the tank's total delivered volume after addition of the new detergent, then the VAR formula record is required to identify only the use of the new detergent, and must attain the LAC of the new detergent. If the original detergent's LAC is greater than that of the new detergent, then the compliance period may begin earlier than the date of the commingling event (pursuant to paragraph (c)(7)(iv) of this section) only if the original detergent does not exceed 10 percent of the total detergent used during the compliance period.

(C) If neither of the preceding paragraphs (c)(7)(v)(A) or (B) of this section applies, then the VAR formula record must identify both of the commingled detergents, and must use and attain the higher LAC of the two detergents. Once the commingled detergent has been depleted by an amount equal to the volume of the original detergent in the tank at the time the new detergent was added, subsequent VAR formula records must identify and use the LAC of only the new detergent.

(8) *Defense to liability for noncompliance with leaded-only use restrictions.* A party shall not be deemed liable for violations of § 80.155(a) or (e) caused solely by the additization or use of gasoline or PRC in violation of leaded-only use restrictions, provided that the conditions specified in § 80.169(c)(9) are met.

(d) *Detergent manufacturer causation liability.* In any case in which a detergent manufacturer is liable for a violation of § 80.155 pursuant to paragraph (a) of this section, and the manufacturer establishes affirmative defense to such liability pursuant to paragraph (c) of this section, the detergent manufacturer will be liable for the violation of § 80.155 pursuant to this paragraph (d) of this section, provided that EPA can demonstrate, by reasonably specific showings by direct or circumstantial evidence, that the detergent manufacturer caused the violation.

[59 FR 54706, Nov. 1, 1994, as amended at 61 FR 35358, July 5, 1996]

§ 80.157 Volumetric additive reconciliation ("VAR"), equipment calibration, and recordkeeping requirements.

This section contains requirements for automated detergent blending facilities and hand-blending detergent facilities. All gasolines and all PRC intended for use in gasoline must be additized, unless otherwise noted in supporting VAR records, and must be accounted for in VAR records. The VAR reconciliation standard is attained under this section when the actual concentration of detergent used per VAR formula record equals or exceeds the lowest additive concentration (LAC) specified for that detergent pursuant to § 80.141(c)(3), or, if appropriate, under § 80.141(d). A separate VAR formula record must be created for leaded gasoline additized with a detergent registered for use only with leaded gasoline, or used at a concentration that is registered as effective for leaded gasoline only. Detergent so used must be accurately and separately measured, either through the use of a separate storage tank, a separate meter, or some other measurement system that is able to accurately distinguish its use. Recorded volumes of gasoline, detergent, and PRC must be expressed to the nearest gallon (or smaller units), except that detergent volumes of five gallons or less must be expressed to the nearest tenth of a gallon (or smaller units). However, if the blender's equipment cannot accurately measure to the nearest tenth of a gallon, then such volumes must be rounded downward to the next lower gallon. PRC included in the reconciliation must be identified. Each VAR formula record must also contain the following information:

(a) *Automated blending facilities.* In the case of an automated detergent blending facility, for each VAR period, for each detergent storage system and each detergent in that storage system, the following must be recorded:

(1) The manufacturer and commercial identifying name of the detergent additive package being reconciled, and the LAC specified in the detergent registration for use with the applicable type of gasoline (i.e., unleaded or leaded). The LAC must be expressed in terms of gallons of detergent per thousand gallons of gasoline or PRC, and expressed to four digits. If the specified LAC is only effective for use with leaded gasoline, the record must so indicate. If the detergent storage system which is the subject of the VAR formula record is a proprietary system under the control of a customer, this fact must be indicated on the record.

(2) The total volume of detergent blended into gasoline and PRC, in accordance with one of the following paragraphs, as applicable.

(i) For a facility which uses in-line meters to measure detergent usage, the total volume of detergent measured, together with supporting data which includes one of the following: the beginning and ending meter readings for each meter being measured, the metered batch volume measurements for each meter being measured, or other comparable metered measurements. The supporting data may be supplied on the VAR formula record or in the form of computer printouts or other comparable VAR supporting documentation.

(ii) For a facility which uses a gauge to measure the inventory of the detergent storage tank, the total volume of

detergent shall be calculated from the following equation:

Detergent Volume = (A) − (B) + (C) − (D)

where:

A = Initial detergent inventory of the tank
B = Final detergent inventory of the tank
C = Sum of any additions to detergent inventory
D = Sum of any withdrawals from detergent inventory for purposes other than the additization of gasoline or PRC.

The value of each variable in this equation must be separately recorded on the VAR formula record. In addition, a list of each detergent addition included in variable C and a list of each detergent withdrawal included in variable D must be provided, either on the formula record or as VAR supporting documentation.

(3) The total volume of gasoline plus PRC to which detergent has been added, together with supporting data which includes one of the following: The beginning and ending meter measurements for each meter being measured, the metered batch volume measurements for each meter being measured, or other comparable metered measurements. The supporting data may be supplied on the VAR formula record or in the form of computer printouts or other comparable VAR supporting documentation. If gasoline has intentionally been overadditized in anticipation of the later addition of unadditized PRC, then the total volume of gasoline plus PRC recorded must include the expected amount of unadditized PRC to be added later. In addition, the amount of gasoline which was overadditized for this purpose must be specified.

(4) The actual detergent concentration, calculated as the total volume of detergent added (pursuant to paragraph (a)(2) of this section), divided by the total volume of gasoline plus PRC (pursuant to paragraph (a)(3) of this section). The concentration must be calculated and recorded to four digits.

(5) A list of each detergent concentration rate initially set for the detergent that is the subject of the VAR record, together with the date and description of each adjustment to any initially set concentration. The concentration adjustment information may be supplied on the VAR formula record or in the form of computer printouts or other comparable VAR supporting documentation. No concentration setting is permitted below the applicable LAC, except as may be modified pursuant to § 80.141(d) or as described in paragraph (a)(7) of this section.

(6) The dates of the VAR period, which shall be no longer than thirty-one days. If the VAR period is contemporaneous with a calendar month, then specifying the month will fulfill this requirement; if not, then the beginning and ending dates and times of the VAR period must be listed. The times may be supplied on the VAR formula record or in supporting documentation. Any adjustment to any detergent concentration rate more than 10 percent over the concentration rate initially set in the VAR period shall terminate that VAR period and initiate a new VAR period, except as provided in paragraph (a)(7) of this section.

(7) The concentration setting for a detergent injector may be set below the applicable LAC, or it may be adjusted more than 10 percent above the concentration initially set in the VAR period without terminating that VAR period, provided that:

(i) The purpose of the change is to correct a batch misadditization prior to the end of the VAR period and prior to the transfer of the batch to another party, or to correct an equipment malfunction; and

(ii) The concentration is immediately returned after the correction to a concentration that fulfills the requirements of paragraphs (a)(5) and (6) of this section; and

(iii) The blender creates and maintains documentation establishing the date and adjustments of the correction; and

(iv) If the correction is initiated only to rectify an equipment malfunction, and the amount of detergent used in this procedure is not added to gasoline in the compliance period, then this amount is subtracted from the detergent volume listed on the VAR formula record.

(8) If unadditized gasoline has been transferred from the facility, other

than bulk transfers from refineries or pipelines to non-retail outlets or non-WPC facilities, the total amount of such gasoline must be specified.

(b) *Non-automated facilities.* In the case of a facility in which hand blending or any other non-automated method is used to blend detergent, for each detergent and for each batch of gasoline and each batch of PRC to which the detergent is being added, the following shall be recorded:

(1) The manufacturer and commercial identifying name of the detergent additive package being reconciled, and the LAC specified in the detergent registration for use with the applicable type of gasoline (i.e., unleaded or leaded). The LAC must be expressed in terms of gallons of detergent per thousand gallons of gasoline or PRC, and expressed to four digits. If the specified LAC is only effective for use with leaded gasoline, the record must so indicate.

(2) The date of the additization that is the subject of the VAR formula record.

(3) The volume of added detergent.

(4) The volume of the gasoline and/or PRC to which the detergent has been added. If gasoline has intentionally been overadditized in anticipation of the later addition of unadditized PRC, then the total volume of gasoline plus PRC recorded must include the expected amount of unadditized PRC to be added later. In addition, the amount of gasoline which was overadditized for this purpose must be specified.

(5) The brand (if known), grade, and leaded/unleaded status of gasoline, and/or the type of PRC.

(6) The actual detergent concentration, calculated as the volume of added detergent (pursuant to paragraph (b)(3) of this section), divided by the volume of gasoline and/or PRC (pursuant to paragraph (b)(4) of this section). The concentration must be calculated and recorded to four digits.

(c) Every VAR formula record created pursuant to paragraphs (a) and (b) of this section shall contain the following:

(1) The signature of the creator of the VAR record;

(2) The date of the creation of the VAR record; and

(3) A certification of correctness by the creator of the VAR record.

(d) *Electronically-generated VAR formula and supporting records.* (1) Electronically-generated records are acceptable for VAR formula records and supporting documentation (including PTDs), provided that they are complete, accessible, and easily readable. VAR formula records must also be stored with access and audit security, which must restrict to a limited number of specified people those who have the ability to alter or delete the records. In addition, parties maintaining records electronically must make available for EPA use the hardware and software necessary to review the records.

(2) Electronically-generated VAR formula records may use an electronic user identification code to satisfy the signature requirements of paragraph (c)(1) of this section, provided that:

(i) The use of the ID is limited to the record creator; and

(ii) A paper record is maintained, which is signed and dated by the VAR formula record creator, acknowledging that the use of that particular user ID on a VAR formula record is equivalent to his/her signature on the document.

(e) Automated detergent blenders must calibrate their detergent equipment once in each calendar half year, with the acceptable calibrations being no less than one hundred twenty days apart. Equipment recalibration is also required each time the detergent package is changed, unless written documentation indicates that the new detergent package has the same viscosity as the previous detergent package. Detergent package change calibrations may be used to satisfy the semiannual requirement provided that the calibrations occur in the appropriate half calendar year and are no less than one hundred twenty days apart.

(f) The following VAR supporting documentation must also be created and maintained:

(1) For all automated detergent blending facilities, documentation reflecting performance of the calibrations required by paragraph (e) of this section, and any associated adjustments of the automated detergent equipment;

(2) For all hand-blending facilities which are terminals, a record specifying, for each calendar month, the total volume in gallons of transfers from the facility of unadditized base gasoline;

(3) For all detergent blending facilities, product transfer documents for all gasoline, detergent and detergent-additized PRC transferred into or out of the facility; in addition, bills of lading, transfer, or sale for all unadditized PRC transferred into the facility;

(4) For all automated detergent blending facilities, documentation establishing the brands (if known) and grades of the gasoline which is the subject of the VAR formula record;

(5) For all hand blending detergent blenders, the documentation, if in the party's possession, supporting the volumes of gasoline, PRC, and detergent reported on the VAR formula record; and

(6) For all detergent blending facilities, documentation establishing the curing of a batch or amount of misadditized gasoline or PRC, or the curing of a use restriction on the additized gasoline or PRC, and providing at least the following information: the date of the curing procedure; the problem that was corrected; the amount, name, and LAC of the original detergent used; the amount, name, and LAC of the added curing detergent; and the actual detergent concentration attained in, and the volume of, the total cured product.

(g) *Document retention and availability*. All detergent blenders shall retain the documents required under this section for a period of five years from the date the VAR formula records and supporting documentation were created, and shall deliver them upon request to the EPA Administrator or the Administrator's authorized representative.

(1) Except as provided in paragraph (g)(3) of this section, automated detergent blender facilities and hand-blender facilities which are terminals, which physically blend detergent into gasoline, must make immediately available to EPA, upon request, the preceding twelve months of VAR formula records plus the preceding two months of VAR supporting documentation.

(2) Except as provided in paragraph (g)(3) of this section, other hand-blending detergent facilities which physically blend detergent into gasoline must make immediately available to EPA, upon request, the preceding two months of VAR formula records and VAR supporting documentation.

(3) Facilities which have centrally maintained records at other locations, or have customers who maintain their own records at other locations for their proprietary detergent systems, and which can document this fact to the Agency, may have until the start of the next business day after the request to supply VAR supporting documentation, or longer if approved by the Agency.

(4) In this paragraph (g) of this section, the term immediately available means that the records must be provided, electronically or otherwise, within approximately one hour of EPA's request, or within a longer time frame as approved by EPA.

[59 FR 54706, Nov. 1, 1994, as amended at 61 FR 35360, July 5, 1996]

§ 80.158 Product transfer documents (PTDs).

(a) *Contents*. For each occasion when any gasoline refiner, importer, reseller, distributor, carrier, retailer, wholesale purchaser-consumer, oxygenate blender, detergent manufacturer, distributor, carrier, or blender, transfers custody or title to any gasoline, detergent, or detergent-additized PRC other than when detergent-additized gasoline is sold or dispensed at a retail outlet or wholesale purchaser-consumer facility to the ultimate consumer, the transferor shall provide to the transferee, and the transferee shall acquire from the transferor, documents which accurately include the following information:

(1) The names and addresses of the transferee and transferor; the address requirement may be fulfilled, in the alternative, through separate documentation which establishes said addresses and is maintained by the parties and made available to EPA for the same length of time as required for the PTDs, provided that the normal business procedure of these parties is not to identify addresses on PTDs.

(2) The date of the transfer.

(3) The volume of product transferred.

(4)(i) The identity of the product being transferred (i.e., its identity as base gasoline, detergent, detergent-additized gasoline, or specified detergent-additized oxygenate or detergent-additized gasoline blending stock that comprises a detergent-additized PRC). PTDs for detergent-additized gasoline or PRC are not required to identify the particular detergent used to additize the product.

(ii) If the product being transferred consists of two or more different types of product subject to this regulation, i.e., base gasoline, detergent-additized gasoline, or specified detergent-additized PRC, then the PTD for the commingled product must identify each such type of component contained in the commingled product.

(5) If the product being transferred is base gasoline, then in addition to the base gasoline identification, the following warning must be stated on the PTD: ''Not for sale to the ultimate consumer''. If, pursuant to §80.160(a), the product being transferred is exempt base gasoline to be used for research, development, or test purposes only, the following warning must also be stated on the PTD: ''For use in research, development, and test programs only.''

(6) The name of the detergent additive as reported in its registration must be used to identify the detergent package on its PTD.

(7) If the product being transferred is leaded gasoline, then the PTD must disclose that the product contains lead and/or phosphorous, as applicable.

(8) If the product being transferred is detergent that is only authorized for the control of carburetor deposits, then the following must be stated on the detergent's transfer document: ''For use with leaded gasoline only.''

(9) If the product being transferred is detergent-additized gasoline that has been overadditized in anticipation of the later (or earlier) addition of PRC, then the PTD must include a statement that the product has been overadditized to account for a specified volume in gallons, or a specified percentage of the product's total volume, of additional, specified PRC.

(b) Gasoline may not be additized with a detergent authorized only for the control of carburetor deposits and whose product transfer document states ''For use with leaded gasoline only'', and gasoline may not be additized at the lower concentration specified for a detergent authorized at a lower concentration for the control of carburetor deposits only, unless the product transfer document for the gasoline to be additized identifies it as leaded gasoline.

(c) *Use of product codes and other non-regulatory language.* (1) Product codes and other non-regulatory language may not be used as a substitute for the specified PTD warning language specified in paragraph (a)(6) of this section for base gasoline, except that:

(i) The specified warning language may be omitted for bulk transfers of base gasoline from a refinery to a pipeline if there is a prior written agreement between the parties specifying that all such gasoline is unadditized and will not be transferred to the ultimate consumer;

(ii) Product codes may be used as a substitute for the specified warning language provided that the PTD is an electronic data interchange (EDI) document being used solely for the transfer of title to the base gasoline, and provided that the product codes otherwise comply with the requirements of this section.

(2) Product codes and other language not specified in this section may otherwise be used to comply with PTD information requirements, provided that they are clear, accurate, and not misleading.

(3) If product codes are used, they must be standardized throughout the distribution system in which they are used, and downstream parties must be informed of their full meaning.

(d) *PTD exemption for small transfers of additized gasoline.* Transfers of additized gasoline are exempt from the PTD requirements of this section provided all the following conditions are followed:

(1) The product is being transferred by a distributor who is not the product's detergent blender; and

(2) The recipient is a wholesale purchaser-consumer (WPC) or other ultimate consumer of gasoline, for its own use only or for that of its agents or employees; and

(3) The volume of additized gasoline being transferred is not greater than 550 gallons.

(e) *Recordkeeping period.* Any person creating, providing or acquiring product transfer documentation for gasoline, detergent, or detergent-additized PRC, except as provided in paragraph (d) of this section, shall retain the documents required by this section for a period of five years from the date the product transfer documentation was created, received or transferred, as applicable, and shall deliver such documents to EPA upon request. WPCs are not required to retain PTDs of additized gasoline received by them.

[61 FR 35362, July 5, 1996, as amended at 62 FR 60001, Nov. 6, 1997]

§ 80.159 Penalties.

(a) *General.* Any person who violates any prohibition or affirmative requirement of § 80.155 shall be liable to the United States for a civil penalty of not more than the sum of $25,000 for every day of such violation and the amount of economic benefit or savings resulting from the violation.

(b) *Gasoline non-conformity.* Any violation of § 80.155(a) shall constitute a separate day of violation for each and every day the gasoline in violation remains at any place in the gasoline distribution system, beginning on the day that the gasoline is in violation of the respective prohibition and ending on the last day that such gasoline is offered for sale or is dispensed to any ultimate consumer.

(c) *Detergent non-conformity.* Any violation of § 80.155(d) shall constitute a separate day of violation for each and every day the detergent in violation remains at any place in the gasoline or detergent distribution system, beginning on the day that the detergent is in violation of the prohibition and ending on the last day that detergent-additized gasoline, containing the subject detergent as a component thereof, is offered for sale or is dispensed to any ultimate consumer.

(d) *Post-refinery component non-conformity.* Any violation of § 80.155(e) shall constitute a separate day of violation for each and every day the post-refinery component in violation remains at any place in the post-refinery component or gasoline distribution system, beginning on the day that the post-refinery component is in violation of the respective prohibition and ending on the last day that detergent-additized gasoline containing the post-refinery component is offered for sale or is dispensed to any ultimate consumer.

(e) *Product transfer document non-conformity.* Any violation of § 80.155(c) shall constitute a separate day of violation for every day the product transfer document is not fully in compliance. This is to begin on the day that the product transfer document is created or should have been created and to end at the later of the following dates: Either the day that the document is corrected and comes into compliance, or the day that gasoline not additized in conformity with interim detergent program requirements, as a result of the product transfer document non-conformity, is offered for sale or is dispensed to the ultimate consumer.

(f) *Volumetric additive reconciliation (VAR) record keeping non-conformity.* Any VAR recordkeeping violation of § 80.155(b) shall constitute a separate day of violation for every day that VAR recordkeeping is not fully in compliance. Each element of the VAR record keeping program that is not in compliance shall constitute a separate violation for purposes of this section.

(g) *Volumetric additive reconciliation (VAR) compliance standard non-conformity.* Any violation of the VAR compliance standard established in § 80.157 shall constitute a separate day of violation for each and every day of the VAR compliance period in which the standard was violated.

(h) *Volumetric additive reconciliation (VAR) equipment calibration non-conformity.* Any VAR equipment calibration violation of § 80.155(b) shall constitute a separate day of violation for every day a VAR equipment calibration requirement is not met.

§ 80.160 Exemptions.

(a) *Research, development, and testing exemptions.* Any detergent that is either in a research, development, or test status, or is sold to petroleum, automobile, engine, or component manufacturers for research, development, or test purposes, or any gasoline to be used by, or under the control of, petroleum, additive, automobile, engine, or component manufacturers for research, development, or test purposes, is exempted from the provisions of the interim detergent program, provided that:

(1) The detergent (or fuel containing the detergent), or the gasoline, is kept segregated from non-exempt product, and the party possessing the product maintains documentation identifying the product as research, development, or testing detergent or fuel, as applicable, and stating that it is to be used only for research, development, or testing purposes; and

(2) The detergent (or fuel containing the detergent), or the gasoline, is not sold, dispensed, or transferred, or offered for sale, dispensing, or transfer from a retail outlet. It shall also not be sold, dispensed, or transferred, or offered for sale, dispensing, or transfer from a wholesale purchaser-consumer facility, unless such facility is associated with detergent, fuel, automotive, or engine research, development or testing; and

(3) The party using the product for research, development, or testing purposes, or the party sponsoring this usage, notifies the EPA, on at least an annual basis and prior to the use of the product, of the purpose(s) of the program(s) in which the product will be used and the anticipated volume of the product to be used. The information must be submitted to the address or fax number provided in § 80.174(c).

(b) *Racing fuel and aviation fuel exemptions.* Any fuel that is refined, sold, dispensed, transferred, or offered for sale, dispensing, or transfer as automotive racing fuel or as aircraft engine fuel, is exempted from the provisions of this subpart, provided that:

(1) The fuel is kept segregated from non-exempt fuel, and the party possessing the fuel for the purposes of refining, selling, dispensing, transferring, or offering for sale, dispensing, or transfer as automotive racing fuel or as aircraft engine fuel, maintains documentation identifying the product as racing fuel, restricted for non-highway use in racing motor vehicles, or as aviation fuel, restricted for use in aircraft, as applicable;

(2) Each pump stand at a regulated party's facility, from which such fuel is dispensed, is labeled with the applicable fuel identification and use restrictions described in paragraph (b)(1) of this section; and

(3) The fuel is not sold, dispensed, transferred, or offered for sale, dispensing, or transfer for highway use in a motor vehicle.

(c) *California gasoline exemptions.* (1) Gasoline or PRC which is additized in the State of California is exempt from the VAR provisions in §§ 80.155(b) and (e) and 80.157, provided that:

(i) For all such gasoline or PRC, whether intended for sale within or outside of California, records of the type required for California gasoline (specified in title 13, California Code of Regulations, section 2257) are maintained; and

(ii) Such records, with the exception of daily additization records, are maintained for a period of five years from the date they were created and are delivered to EPA upon request.

(2) Gasoline or PRC that is transferred and/or sold solely within the State of California is exempt from the PTD provisions of the interim detergent program, specified in §§ 80.155(c) and 80.158.

(3) Nothing in this paragraph (c) exempts such gasoline or PRC from the requirements of § 80.155(a) and (e), as applicable. EPA will base its determination of California gasoline's conformity with the detergent's LAC on the additization records required by CARB, or records of the same type.

[61 FR 35363, July 5, 1996]

§ 80.161 Detergent additive certification program.

(a) *Effective dates and applicability of requirements.* (1) As of July 1, 1997:

(i) Detergent additives for the control of port fuel injector deposits (PFID) and/or intake valve deposits (IVD) in gasoline engines may not be

transferred or sold for use in compliance with this subpart unless such additives have been certified according to the requirements of this section.

(ii) Except as provided in § 80.169(c)(8), PFID and IVD control additives may not be added to gasoline or post-refinery component (PRC) for compliance with this subpart unless such additives have been certified according to the requirements of this section.

(iii) Gasoline may not be sold or transferred to a party who sells or transfers gasoline to the ultimate consumer unless such gasoline contains detergent additives which have been certified according to the requirements of this section.

(2) Beginning August 1, 1997, all gasoline sold or transferred to the ultimate consumer must contain detergent additive(s) which have been certified, according to the requirements of this section, to be effective for the control of PFID and IVD in gasoline engines.

(3) Except as specifically exempted in § 80.173, these detergency requirements apply to all gasoline, whether intended for on-highway or nonroad use, including conventional, oxygenated, reformulated, and leaded gasolines, as well as the gasoline component in mixtures of petroleum and alcohol fuels, gasoline used as marine fuel, gasoline service accumulation fuel (as described in § 86.113–94(a)(1) of this chapter), the gasoline component of fuel mixtures of petroleum and methanol used for service accumulation in flexible fuel vehicles (as described in § 86.113–94(d) of this chapter), the gasoline used for factory fill purposes, and all additized PRC.

(4) The specific controls and prohibitions applicable to persons subject to these regulations are set forth in § 80.168.

(b) *Detergent additive certification requirements.* For a detergent additive package to be certified as eligible for use by detergent blenders in complying with the gasoline detergency requirements of this subpart, the requirements listed in this paragraph (b) must be satisfied for such detergent. Subject to the provisions of paragraph (e) of this section, if the certifier fails to conduct the specified tests or to submit the specified materials, or if EPA judges the testing or materials to be inadequate, or if the detergent fails EPA confirmatory deposit control performance testing pursuant to § 80.167, the Administrator may deny or withdraw the detergent's eligibility to be used to satisfy the detergency requirements of this subpart.

(1) The detergent additive manufacturer must properly register the detergent additive under 40 CFR part 79. For this purpose:

(i) The compositional data required under § 79.21(a) of this chapter shall include the information specified in § 80.162.

(ii) The minimum recommended additive concentration required under § 79.21(d) of this chapter shall be reported to EPA in units of gallons of detergent additive package per 1000 gallons of gasoline or PRC, provided to four digits. This concentration is the lowest additive concentration (LAC) referred to in § 80.170, and shall be reported as follows:

(A) For a detergent additive registered for use in unleaded gasoline, the minimum concentration must be determined and reported for each certification option under which the manufacturer wishes to certify the additive pursuant to § 80.163.

(*1*) In the case of a detergent certified for use in California gasoline based on an existing certification granted by the California Air Resources Board (CARB), pursuant to § 80.163(d), the minimum recommended concentration must equal or exceed the amount specified in the CARB certification.

(*2*) In the case of any other detergent certification option, the minimum recommended concentration must equal or exceed the amount mixed into the associated test fuel specified in § 80.164, which was shown to satisfy the PFID and IVD deposit control performance tests and standards specified in § 80.165.

(B) For a detergent registered for use in leaded gasoline, the minimum recommended concentration must be no less than the amount shown to be needed for control of carburetor deposits, pursuant to the test procedure and test fuel guidelines in § 80.166.

(C) Once it has been registered by EPA, the minimum recommended concentration specified by a detergent

manufacturer to detergent blenders and other users of the additive, pursuant to paragraph (c) of this section, may not be changed without first notifying EPA. Such notification should be sent by certified mail to the address specified in § 80.174(b). The change in minimum concentration must be supported by existing certification data or else the notification to EPA must be accompanied by new certification information which demonstrates that the modification is consistent with the requirements of paragraphs (b)(1)(ii)(A) and (B) of this section.

(D) A manufacturer may use a single set of certification test data to demonstrate the deposit control effectiveness of more than one registered detergent additive product, provided that:

(*1*) The additive products contain all of the same detergent-active components and no detergent-active components other than those contained in common; and

(*2*) The minimum concentration recommended for the use of each such additive product is specified such that, when each additive product is mixed in gasoline at the recommended concentration, each of its detergent-active components will be present at a final concentration no less than the lowest concentration of that component which was present when the tested additive product met the PFID and IVD performance standards specified in § 80.165.

(2) The detergent additive manufacturer (or other certifying party) must submit to EPA a sample of the actual detergent additive package which was used in the certification testing specified in § 80.164 or, if such sample is not available, then a sample which has the same composition as the package used in certification testing.

(i) The sample volume shall be between 250 ml and 500 ml.

(ii) The sample shall be packaged in a container which has a resealable closure and which will maintain sample integrity for at least one year. The container shall be labeled with the name and address of the manufacturer and the name of the detergent additive package.

(iii) Any known shelf life limitations, and any available information on optimal temperature, light exposure, or other conditions to prolong sample shelf life, shall be provided.

(iv) If the certifying party wishes to claim that the sample or any accompanying documents are entitled to special handling for reasons of business confidentiality, the party must clearly identify the sample or documents as such. EPA will handle any samples or documents with such claims according to the regulations at 40 CFR part 2.

(v) The sample shall be submitted to EPA, at the address provided in § 80.174(a), within seven days of the date on which the certification letter for the detergent package is sent to EPA as required by paragraph (b)(3) of this section.

(3) The detergent additive manufacturer (or other certifying party) shall submit a certification letter for the detergent additive package to the address in § 80.174(b). The party must use certified or express mail with return receipt service. The letter shall be signed by a person legally authorized to represent the certifying party and shall contain the following information:

(i) Identifying information.

(A) The name and address of the detergent additive manufacturer.

(B) In any case where the certifier is not the detergent additive manufacturer, such as in the case of a fuel-specific certification pursuant to § 80.163(c), the name and address of the certifier.

(C) The commercial identifying name of the detergent additive product as registered under the requirements of § 79.21 of this chapter.

(ii) A statement attesting that:

(A) The detergent package which is the subject of this certification has been tested according to applicable procedural and test fuel requirements in this subpart and has met the applicable performance standards; and

(B) The testing was conducted in a manner consistent with good engineering practices; and

(C) Complete documentation of the test fuel formulation and IVD demonstration procedures, detergent performance test procedures, and test results are available for EPA's inspection upon request.

(iii) The name and location of the laboratory(ies) at which the certification testing was conducted and the dates during which the testing was conducted.

(iv) For each option under which certification is sought pursuant to § 80.163, specifications of the test fuel(s) in which the detergent underwent performance testing. These fuel specifications must include:

(A) The sulfur content in weight percent.

(B) The T–90 distillation point in degrees Fahrenheit.

(C) The olefin content in volume percent.

(D) The aromatic content in volume percent.

(E) The identity and volume percent of any oxygenate compound.

(F) The source of the test fuel(s) and/or fuel blend stocks used to formulate the test fuel(s).

(v) In the case of a national or PADD certification (pursuant to § 80.163 (a) or (b)) for which the test fuel was specially formulated from refinery blend stocks, the results of the IVD demonstration test, pursuant to § 80.164(b)(3).

(vi) In the case of a fuel-specific detergent certification, pursuant to § 80.163(c), the definition of the segregated gasoline pool, including any permitted PRC, for which the certification is sought, and the fuel parameter percentile distributions determined for the subject gasoline pool, as specified in § 80.164(c). The percentile distributions must include all of the fuel parameters listed in paragraph (b)(3)(iv) (A) through (D) of this section, along with any other fuel parameter(s) which the certifier wishes to use to define the certification fuel. As specified in § 80.164(c)(1)(iv), the procedures used to measure the additional parameters must be identified, as well as the levels of these additional parameters present in the test fuel(s).

(vii) In the case of a certification for California gasoline based on an existing certification granted by CARB, pursuant to § 80.163(d), a copy of the CARB certificate.

(viii) The test concentration(s) of the subject detergent additive in each test fuel, and the corresponding test results (percent flow restriction demonstrated in the PFID test and milligrams of deposit per valve demonstrated in the IVD test).

(ix) For each option under which certification of the detergent is sought, the minimum recommended concentration which the certifying party seeks to establish for the detergent additive package, pursuant to paragraph (b)(1)(ii) of this section.

(4) EPA will acknowledge receipt of the detergent certification letter. The effective date of certification will be the sooner of 60 days from the date on which EPA receives the certification letter, or the certifier's receipt of EPA's acknowledgement of the certification letter. However, neither the passage of 60 days nor EPA's acknowledgement will signify acceptance by EPA of the validity of the information in the certification letter or the adequacy or potency of the detergent sample submitted pursuant to paragraph (b)(2) of this section. EPA may elect at any time to review the detergent certification data, analyze the submitted detergent additive sample, or subject the detergent additive package to confirmatory testing as described in § 80.167 and, where appropriate, may disqualify a detergent certification according to the provisions in paragraph (e) of this section.

(c) The minimum concentration reported in the detergent registration according to the provisions of paragraph (b)(1)(ii) of this section, plus any restrictions in use associated with that concentration, must be accurately communicated in writing by the additive manufacturer to each fuel manufacturer or detergent blender who purchases the subject detergent for purpose of compliance with the gasoline detergency requirements of this subpart, and to any additive manufacturer who purchases the subject additive with the intent of reselling it to a fuel manufacturer for this purpose.

(d) The rate at which a detergent blender treats gasoline with a detergent additive package must be no less than the minimum recommended concentration reported for the subject detergent additive pursuant to paragraph (b)(1)(ii) of this section, except under the following conditions:

(1) If a detergent blender possesses deposit control performance test results as specified in § 80.165 or § 80.166 which show that the minimum treat rate recommended by the manufacturer of a detergent additive product exceeds the amount of that detergent actually required for effective deposit control, then, upon informing EPA in writing of these circumstances, the detergent blender may use the detergent at the lower concentration substantiated by these test results.

(2) The notification to EPA must clearly specify the name of the detergent product and its manufacturer, the concentration recommended by the detergent manufacturer, and the lower concentration which the detergent blender intends to use. The notification must also attest that the required data are available to substantiate the deposit control effectiveness of the detergent at the intended lower concentration. The notification must be sent by certified mail to the address specified in § 80.174(b).

(3) At its discretion, EPA may require that the detergent blender submit the test data purported to substantiate the claimed effectiveness of the lower concentration of the detergent additive. In addition, EPA may require the manufacturer of the subject detergent additive to submit test data substantiating the minimum recommended concentration specified in the detergent additive registration. In either case, EPA will send a letter to the appropriate party; the supporting data will be due to EPA within 30 days of receipt of EPA's letter.

(i) If the detergent blender fails to submit the required supporting data to EPA in the allotted time period, or if EPA judges the submitted data to be inadequate to support the detergent blender's claim that the lower concentration provides a level of deposit control consistent with the requirements of this section, then EPA will disapprove the use of the detergent at the lower concentration. Further, the detergent blender may be subject to applicable liabilities and penalties pursuant to §§ 80.169 and 80.172 for any gasoline or PRC it has additized at the lower concentration.

(ii) If the detergent manufacturer fails to submit the required test data to EPA within the allotted time period, EPA will proceed on the assumption that data are not available to substantiate the minimum recommended concentration specified in the detergent registration, and the subject additive may be disqualified for use in complying with the requirements of this subpart, pursuant to the procedures in paragraph (e) of this section. The detergent manufacturer may also be subject to applicable liabilities and penalties in §§ 80.169 and 80.172.

(iii) If both parties submit the required information, EPA will evaluate the quality and results of both sets of test data, and will either approve or disapprove the use of the lower treat rate submitted by the detergent blender. EPA will inform both parties of the results of its analysis.

(e) *Disqualification of a detergent additive package.* (1) When EPA makes a preliminary determination that a detergent additive certifier has failed to comply with the detergent certification requirements of this section, including a failure to submit required materials for a detergent additive or submission of materials which EPA deems inadequate, or if a detergent additive fails confirmatory testing conducted pursuant to § 80.167, EPA shall notify the additive certifier by certified mail, return receipt requested, setting forth the basis for that determination and informing the certifier that the detergent may lose its eligibility to be used to comply with the detergency requirements of this section.

(2) If EPA determines that the detergent certification was created by fraud or other misconduct, such as a negligent disregard for the truthfulness or accuracy of the required information, the detergent certification will be considered void *ab initio* and the disqualification will be retroactive to July 1, 1997 or the date on which the additive product was first certified, whichever is later.

(3) The certifier will be afforded 60 days from the date of receipt of the notice of intent of detergent disqualification to submit written comments concerning the notice, and to demonstrate or achieve compliance with the specific

requirements which provide the basis for the proposed disqualification. If the certifier does not respond in writing within 60 days from the date of receipt of the notice of intent of disqualification, the detergent disqualification shall become final and the Administrator shall notify the certifier of such final disqualification order. If the certifier responds in writing within 60 days from the date of receipt of the notice of intent to disqualify, the Administrator shall review and consider all comments submitted by the certifier before taking final action concerning the proposed disqualification. All correspondence regarding a disqualification must be sent to the address provided in § 80.174(b).

(4) As part of a written response to a notice of intent to disqualify, a certifier may request an informal hearing concerning the notice. Any such request shall state with specificity the information the certifier wishes to present at such a hearing. If an informal hearing is requested, EPA shall schedule such a hearing within 90 days from the date of receipt of the request. If an informal hearing is held, the subject matter of the hearing shall be confined solely to whether or not the certifier has complied with the specific requirements which provide the basis for the proposed disqualification. If an informal hearing is held, the designated presiding officer may be any EPA employee, the hearing procedures shall be informal, and the hearing shall not be subject to or governed by 40 CFR part 22 or by 5 U.S.C. 554, 556, or 557. A verbatim transcript of each informal hearing shall be kept and the Administrator (or designee) shall consider all relevant evidence and arguments presented at the hearing in making a final decision concerning a proposed disqualification.

(5) If a certifier who has received a notice of intent to disqualify submits a timely written response, and the Administrator (or designee) decides after reviewing the response and the transcript of any informal hearing to disqualify the detergent for use in complying with the requirements of this subpart, the Administrator (or designee) shall issue a final disqualification order and forward a copy of the disqualification order to the certifier by certified mail. Notice of the disqualification order will also be published in the FEDERAL REGISTER. The disqualification will become effective as of the date on which the copy of the order is received by the certifier. If the certifier is also a blender of the disqualified additive, then the certifier must stop using the ineligible detergent upon receipt of the disqualification order.

(6) Within 10 days of receipt of EPA's notification of the final decision to disqualify a detergent additive package pursuant to this paragraph (e), the detergent certifier must submit to EPA, at the address specified in § 80.174(b), a list of its customers who use the disqualified detergent. Failure to do so may subject the certifier to liabilities for violations of § 80.168 that result from the use of the uncertified detergent. EPA shall inform the certifier's customers by certified mail that the detergent is no longer eligible for compliance with the requirements of this subpart. These parties must stop using the ineligible detergent additive package and substitute an eligible detergent additive within 45 days of receiving the notification, or within 45 days of publication of the disqualification notice in the FEDERAL REGISTER, whichever occurs sooner.

[61 FR 35364, July 5, 1996, as amended at 61 FR 58747, Nov. 18, 1996]

§ 80.162 Additive compositional data.

For a detergent additive product to be eligible for use by detergent blenders in complying with the gasoline detergency requirements of this subpart, the compositional data to be supplied to EPA by the additive manufacturer for the purpose of registering a detergent additive package under § 79.21(a) of this chapter must include the items listed in this section. In the case of items requiring measurement or other technical analysis, and for which a specific test procedure is not stipulated herein, the procedure must conform to reasonable and customary standards of repeatability and reproducibility, and reasonable and customary limits of detection and accuracy for the type of test procedure or analytic procedure in question. At EPA's request, detailed

documentation of any such test procedure must be submitted within 10 days of the registrant's receipt of EPA's request.

(a) A complete listing of the components of the detergent additive package and the weight and/or volume percent (as applicable) of each component of the package.

(1) When possible, standard chemical nomenclature shall be used or the chemical structure of the component shall be given. Polymeric components may be reported as the product of other chemical reactants, provided that the supporting data specified in paragraph (b) of this section is also reported.

(2) Each detergent-active component of the package shall be classified into one of the following designations:

(i) Polyalkyl amine;

(ii) Polyether amine;

(iii) Polyalkylsuccinimide;

(iv) Polyalkylaminophenol;

(v) Detergent-active petroleum-based carrier oil;

(vi) Detergent-active synthetic carrier oil; and

(vii) Other detergent-active component (identify category, if feasible.)

(3) Composition variability.

(i) The composition of a detergent additive reported in a single additive registration (and the detergent additive product sold under a single additive registration) may not:

(A) Include detergent-active components which differ in identity from those contained in the detergent additive package at the time of certification testing; or

(B) Include a range of concentration for any detergent-active component such that, if the component were present in the detergent additive package at the lower bound of the reported range, the deposit control effectiveness of the additive package would be reduced as compared with the level of effectiveness demonstrated during certification testing.

(ii) The identity or concentration of non-detergent-active components of the detergent additive package may vary under a single registration, provided that the range of such variation is specified in the registration and that such variability does not reduce the deposit control effectiveness of the additive package as compared with the level of effectiveness demonstrated during certification testing.

(iii) Except as provided in paragraph (a)(3)(iv) of this section, detergent additive packages which do not satisfy the restrictions in this paragraph (a)(3) must be separately registered. EPA may disqualify an additive for use in satisfying the requirements of this subpart if EPA determines that the variability included within a given detergent additive registration may reduce the deposit control effectiveness of the detergent package such that it may invalidate the minimum recommended concentration reported in accordance with the applicable requirements of § 80.161(b)(1)(ii).

(iv) A change in minimum concentration requirements resulting from a modification of detergent additive composition shall not require a new detergent additive registration or a change in existing registration if:

(A) The modification is effected by a detergent blender only for its own use or for the use of parties which are subsidiaries of, or share common ownership with, the blender, and the modified detergent is not sold or transferred to other parties; and

(B) The modification is a dilution of the additive for the purpose of ensuring proper detergent flow in cold weather; and

(C) Gasoline is the only diluting agent used; and

(D) The diluted detergent is subsequently added to gasoline at a rate that attains the detergent's registered minimum recommended concentration, taking into account the dilution; and

(E) EPA is notified, either before or within seven days after the dilution action, of the identity of the detergent, the identity of the diluting material, the amount or percentage of the dilution, the change in treat rate necessitated by the dilution, and the locations and time period of diluted detergent usage. The notification shall be sent or faxed to the address in § 80.174(c).

(b) For detergent-active polymers and detergent-active carrier oils which are reported as the product of other chemical reactants:

(1) Identification of the reactant materials and the manufacturer's acceptance criteria for determining that these materials are suitable for use in synthesizing detergent components. The manufacturer must maintain documentation, and submit it to EPA upon request, demonstrating that the acceptance criteria reported to EPA are the same criteria which the manufacturer specifies to the suppliers of the reactant materials.

(2) A Gel Permeation Chromatograph (GPC), providing the molecular weight distribution of the polymer or detergent-active carrier oil components and the concentration of each chromatographic peak representing more than one percent of the total mass. For these results to be acceptable, the GPC test procedure must include equipment calibration with a polystyrene standard or other readily attainable and generally accepted calibration standard. The identity of the calibration standard must be provided, together with the GPC characterization of the standard.

(c) For non-detergent-active carrier oils, the following parameters:

(1) T10, T50, and T90 distillation points, and end boiling point, measured according to applicable test procedures cited in § 80.46.

(2) API gravity and viscosity

(3) Concentration of oxygen, sulfur, and nitrogen, if greater than or equal to 0.5 percent (by weight) of the carrier oil

(d) Description of an FTIR-based method appropriate for identifying the detergent additive package and its detergent-active components (polymers, carrier oils, and others) both qualitatively and quantitatively, together with the actual infrared spectra of the detergent additive package and each detergent-active component obtained by this test method.

(e) To provide a basis for establishing an affirmative defense to presumptive liability pursuant to § 80.169(c)(4)(i)(D)(*2*)(*i*), specific physical parameters must be identified which the manufacturer considers adequate and appropriate, in combination with other information and sampling requirements under this subpart, for identifying the detergent additive package and monitoring its production quality control.

(1) Such parameters shall include (but need not be limited to) viscosity, density, and basic nitrogen content, unless the additive manufacturer specifically requests, and EPA approves, the substitution of other parameter(s) which the manufacturer considers to be more appropriate for a particular additive package. The request must be made in writing and must include an explanation of how the requested physical parameter(s) are helpful as indicator(s) of detergent production quality control. EPA will respond to such requests in writing; the additional parameters are not approved until the certifier receives EPA's written approval.

(2) The manufacturer shall identify a standardized measurement method, consistent with the chemical and physical nature of the detergent product, which will be used to measure each parameter. The documented ASTM repeatability for the method shall also be cited. The manufacturer's target value for each parameter in the detergent package, and the expected range of production values for each parameter, shall be specified.

(3) EPA will consider the parameter measurements to be an acceptable basis for establishing an affirmative defense to presumptive liability, if the expected range of variability differs from the target value by an amount no greater than five times the standard repeatability of the test procedure, or by no more than 10 percent of the target value, whichever is less. However, in the case of nitrogen analysis or other procedures for measuring concentrations of specific chemical compounds or elements, when the target value is less than 10 parts per million, a range of variability up to 50 percent of the target value will be considered acceptable.

(4) If a manufacturer wishes to rely on measurement methods or production variability ranges which do not conform to the above limitations, then the manufacturer must receive prior written approval from EPA in order to be assured that any related parameter

measurements will be considered an acceptable basis for establishing an affirmative defense. A request for such allowance must be made in writing. It must fully justify the adequacy of the test procedure, explain why a broader range of variability is required, and provide evidence that the production detergent will perform adequately throughout the requested range of variability.

[61 FR 35366, July 5, 1996]

§ 80.163 Detergent certification options.

To be used to satisfy the detergency requirements under § 80.161(a), a detergent additive must be certified in accordance with the requirements of one or more of the options and suboptions described in this section. Where a certification option makes an additive eligible for use in a particular gasoline, that additive is also eligible for use in PRC which will be added to the particular gasoline. Under each option, the lowest additive concentration (LAC) or minimum recommended concentration registered for a detergent additive package, pursuant to § 80.161(b)(1)(ii), must equal or exceed the lowest detergent treat rate shown to be needed in the designated test fuel in order to meet the deposit control performance requirements specified in § 80.165.

(a) *National certification*. A detergent certified under a national certification option is eligible for use in gasoline which can be sold or dispensed anywhere within the United States or its territories (subject to approved State programs).

(1) *National generic certification option*. To be certified under this option, a candidate detergent must meet the deposit control performance test requirements and standards specified in § 80.165 using test fuels that conform to the requirements in § 80.164(b)(1), Table 1, Line 1. A detergent certified under this option is eligible to be used at a conforming LAC in any grade of gasoline, with or without an oxygenate component.

(i) *National nonoxygenate suboption*. The requirements for certification under this suboption are the same as those in paragraph (a)(1) of this section, except that, pursuant to § 80.164(a)(2)(ii), the certification test fuel shall contain no ethanol or other oxygenate. A detergent certified under this suboption is eligible to be used at a conforming LAC only in gasoline that does not contain an oxygenate component.

(ii) *National oxygenate-specific suboption*. The requirements for certification under this suboption are the same as those in paragraph (a)(1) of this section, except that, pursuant to § 80.164(a)(2)(iii), the certification test fuel shall contain an oxygenate compound other than ethanol. A detergent certified under this suboption is eligible to be used at a conforming LAC only in gasoline that contains no oxygenate component other than the one present in the test fuel.

(2) *National premium certification option*. To be certified under this option, a candidate detergent must meet the deposit control performance test requirements and standards specified in § 80.165 using test fuels that conform to the requirements in § 80.164(b)(1), Table 1, Line 2. A detergent certified under this option is eligible to be used at a conforming LAC only in premium grade gasoline, with or without an oxygenate component.

(i) *National premium nonoxygenate suboption*. The requirements for certification under this suboption are the same as those in paragraph (a)(2) of this section, except that, pursuant to § 80.164(a)(2)(ii), the certification test fuel shall contain no ethanol or other oxygenate. A detergent certified under this suboption is eligible to be used at a conforming LAC only in premium grade gasoline that does not contain an oxygenate component.

(ii) *National premium oxygenate-specific suboption*. The requirements for certification under this suboption are the same as those in paragraph (a)(2) of this section, except that, pursuant to § 80.164(a)(2)(iii), the certification test fuel shall contain an oxygenate compound other than ethanol. A detergent certified under this suboption is eligible to be used at a conforming LAC only in gasoline that is premium grade and contains no oxygenate component other than the one present in the test fuel.

(b) *Petroleum Administrative Defense District (PADD) Certification.* A detergent certified under a PADD certification option is eligible for use in gasoline which can be sold or dispensed to the ultimate purchaser, or to those parties who sell or dispense to the ultimate consumer, only within the PADD for which the certification was granted. The States and jurisdictions included within each PADD are specified in § 79.59(b)(3)(i) through (v), except that, for purposes of PADD certification, the State of California is excluded from PADD V.

(1) *PADD generic certification option.* To be certified under this option, a candidate detergent must meet the deposit control performance test requirements and standards specified in § 80.165 using test fuels that conform to the requirements in § 80.164(b)(1), Table 2, for a selected PADD. A detergent certified under this option is eligible to be used at a conforming LAC in any grade of gasoline, with or without an oxygenate component, provided that the gasoline is ultimately dispensed in the selected PADD.

(i) *PADD nonoxygenate suboption.* The requirements for certification under this suboption are the same as those in paragraph (b)(1) of this section, except that, pursuant to § 80.164(a)(2)(ii), the certification test fuel shall contain no ethanol or other oxygenate. A detergent certified under this suboption is eligible to be used at a conforming LAC only in gasoline that is nonoxygenated and is ultimately dispensed in the selected PADD.

(ii) *PADD oxygenate-specific suboption.* The requirements for certification under this suboption are the same as those in paragraph (b)(1) of this section, except that, pursuant to § 80.164(a)(2)(iii), the certification test fuel shall contain an oxygenate compound other than ethanol. A detergent certified under this suboption is eligible to be used at a conforming LAC only in gasoline that contains no oxygenate component other than the one present in the test fuel and is ultimately dispensed in the selected PADD.

(2) *PADD premium certification option.* To be certified under this option, a candidate detergent must meet the deposit control performance test requirements and standards specified in § 80.165 using test fuels that conform to the requirements in § 80.164(b)(1), Table 2, for a selected PADD. A detergent certified under this option is eligible to be used at a conforming LAC only in gasoline that is premium grade (with or without an oxygenate component) and is ultimately dispensed in the selected PADD.

(i) *PADD premium nonoxygenate suboption.* The requirements for certification under this suboption are the same as those in paragraph (b)(2) of this section, except that, pursuant to § 80.164(a)(2)(ii), the certification test fuel shall contain no ethanol or other oxygenate. A detergent certified under this suboption is eligible to be used at a conforming LAC only in gasoline that is premium grade, contains no oxygenate component, and is ultimately dispensed in the selected PADD.

(ii) *PADD premium oxygenate-specific suboption.* The requirements for certification under this suboption are the same as those in paragraph (b)(2) of this section, except that, pursuant to § 80.164(a)(2)(iii), the certification test fuel shall contain an oxygenate compound other than ethanol. A detergent certified under this suboption is eligible to be used at a conforming LAC only in gasoline that is premium grade, contains no oxygenate component other than the one present in the test fuel, and is ultimately dispensed in the selected PADD.

(c) *Fuel-specific certification.* Except as provided in paragraph (c)(3) of this section, to be certified under the fuel-specific certification option, a candidate detergent must meet the deposit control performance test requirements and standards specified in § 80.165 using test fuels that conform to the requirements of § 80.164(c).

(1) A detergent certified under this option is eligible to be used at a conforming LAC only in the defined gasoline pool reported in the certification letter pursuant to § 80.161(b)(3).

(i) The gasoline pool may only include gasoline produced or distributed from the facilities covered by the fuel survey which was used to define the fuel-specific certification test fuels, pursuant to § 80.164(c)(1).

(ii) The gasoline pool must be kept segregated from any other gasoline prior to blending with the detergent additive.

(iii) Depending on the oxygenate components added to the test fuel pursuant to § 80.164(a)(2), the gasoline pool may be inclusive of all grades and all oxygenate blending characteristics (i.e., generic), or may be restricted to non-oxygenated gasoline, or to gasoline containing a specific oxygenate compound. The certification may also be restricted to premium grade gasoline. Any such use restrictions must be specified in the certification letter. Provisions in §§ 80.168 and 80.171(a)(9) through (12) related to such use restrictions also apply.

(2) Detergent certification under this option entails special initial and annual reporting requirements, specified under §§ 80.161(b)(3)(vi) and 80.164(c)(3), which necessitate that the responsible party have control over and access to the segregated gasoline pool for which the detergent is certified. For this reason, the certifying party under this option is likely to be (but is not required to be) a fuel manufacturer or detergent blender, rather than the additive manufacturer.

(3) If a certifier demonstrates that the required test fuel representing a segregated pool of gasoline meets the deposit control performance standards specified in § 80.165 in the absence of a detergent additive, or using a detergent additive which has only PFID-control activity, then this gasoline pool (and PFID detergent, if applicable) can be certified accordingly under the fuel-specific option.

(4) Gasoline properly additized with a detergent certified under the fuel-specific option may be transferred or sold anywhere within the United States and its territories (subject to approved State programs).

(d) *CARB-Based Certification*. A valid certification under section 2257 of Title 13, California Code of Regulations (CARB certification) may be the basis for a certification under the following restrictions and conditions:

(1) A detergent certified under this option may be used at the LAC specified in the CARB certification only in gasoline that meets the requirements of California Phase II reformulated gasoline (pursuant to Title 13, Chapter 5, Article 1, Subarticle 2, California Code of Regulations, Standards for Gasoline Sold Beginning March 1, 1996). The grade(s) of California gasoline which may be so additized, and the oxygenate(s) which may be present, are as specified in the CARB certification for the detergent in question.

(2) The gasoline must be either: Additized in California; or sold or dispensed to the ultimate consumer in California (or to parties who sell or dispense to the ultimate consumer in California); or both additized and ultimately dispensed in California.

(3) A certification under this option will continue to be valid only as long as the CARB certification remains valid. The certifier must cease selling or using a detergent immediately upon being notified by CARB that the CARB certification for this detergent has been invalidated, and must notify EPA within 7 days of receipt of this notification.

[61 FR 35368, July 5, 1996]

§ 80.164 Certification test fuels.

(a) *General requirements*. This section provides specifications for the test fuels required in conjunction with the certification options described in § 80.163. For each such certification option, the associated test fuel must meet or exceed the levels of four basic fuel parameters (aromatics, fuel sulfur, olefins, and T–90) prescribed here and may also contain specified oxygenate compounds. In addition, pursuant to paragraph (b)(3) of this section, some fuels must undergo an IVD demonstration test before they are eligible to be used as test fuels under this certification program. Test fuel characteristics must be reported to EPA in the detergent certification letter required pursuant to § 80.161(b)(3).

(1) Quantitative specifications for the four basic fuel parameters, provided in paragraphs (b) and (c) of this section, refer to the levels of these parameters in the base gasoline prior to the addition of any oxygenate. The levels of the basic fuel parameters must be measured in accordance with applicable procedures in § 80.46.

(2) Oxygenate components of certification test fuels must be of fuel grade quality. The type and amount of oxygenate to be blended into the test fuel (if any) shall be as follows:

(i) To certify a detergent for generic use (i.e., for use in gasoline containing any oxygenate compound, as well as for use in nonoxygenated gasoline), the finished test fuel shall contain ethanol at 10 volume percent.

(ii) To certify a detergent specifically for use in nonoxygenated gasoline, no oxygenate compounds shall be added to the test fuel.

(iii) To certify a detergent specifically for use in gasoline blended with a specified oxygenate compound other than ethanol, the specified oxygenate must be added to the test fuel in an amount such that the finished fuel contains the oxygenate at the highest concentration at which the specific oxygenate may be used in in-use gasoline.

(3) No detergent-active substance other than the detergent additive package undergoing testing may be added to a certification test fuel. Typical nondetergent additives, such as antioxidants, corrosion inhibitors, and metal deactivators, may be present in the test fuel at the discretion of the additive certifier. In addition, any nondetergent additives (other than oxygenate compounds) which are commonly blended into gasoline and which are known or suspected to affect IVD or PFID formation, or to reduce the ability of the detergent in question to control such deposits, should be added to the test fuel for certification testing.

(4) Certification test requirements may be satisfied for a detergent additive using more than one batch of test fuel, provided that each batch satisfies all applicable test fuel requirements under this section.

(5) Unless otherwise required by this section, finished test fuels must conform to the requirements for commercial gasoline described in ASTM D 4814–95c, ''Standard Specification for Automotive Spark-IgnitionEngine Fuel'', which is incorporated by reference. This incorporation by reference was approved by the Director of the Federal Register in accordance with 5 U.S.C. 552(a) and 1 CFR part 51. Copies may be inspected at U.S. EPA, OAR, 401 M St., SW., Washington, DC 20460, or at the Office of the Federal Register, 800 North Capitol Street, NW., suite 700, Washington, DC. Copies of this material may be obtained from ASTM, 1916 Race St., Philadelphia, PA 19103.

(b) *National and PADD certification test fuels.*(1) Test fuels for the national generic and premium certification options must contain levels of the designated fuel parameters which meet or exceed the applicable values in Table 1. Test fuels for the PADD generic certification options must contain levels of the designated fuel parameters which meet or exceed the applicable values in Table 2. Test fuels for the PADD premium certification options must contain levels of the designated fuel parameters which meet or exceed the applicable values in Table 3. Oxygenate requirements for the respective nonoxygenate and oxygenate-specific suboptions are specified in paragraph (a)(2) of this section.

TABLE 1—NATIONAL CERTIFICATION TEST FUELS

Certification option	Required minimum fuel parameter values				
	Sulfur (weight %)	T–90 (F)	Olefins (volume %)	Aromatics (volume %)	Oxygenate (volume %)
1. National Generic	0.034	339	11.4	31.1	10% Ethanol.
2. National Premium	0.016	332	6.5	35.9	

TABLE 2—PADD-SPECIFIC GENERIC CERTIFICATION TEST FUELS

Certification option	Required minimum fuel parameter values				
	Sulfur (weight %)	T–90 (F)	Olefins (volume %)	Aromatics (volume %)	Oxygenate (volume %)
PADD 1 Generic	0.039	343	15.4	32.1	
PADD 2 Generic	0.034	338	10.3	29.3	

TABLE 2—PADD-SPECIFIC GENERIC CERTIFICATION TEST FUELS—Continued

Certification option	Required minimum fuel parameter values				
	Sulfur (weight %)	T–90 (F)	Olefins (volume %)	Aromatics (volume %)	Oxygenate (volume %)
PADD 3 Generic	0.032	343	12.9	29.8	10% Ethanol.
PADD 4 Generic	0.050	326	10.0	27.1	
PADD 5 Generic	0.021	337	7.6	34.5	

TABLE 3—PADD-SPECIFIC PREMIUM-GRADE CERTIFICATION TEST FUELS

Certification option	Required minimum fuel parameter values				
	Sulfur (weight %)	T–90 (F)	Olefins (volume %)	Aromatics (volume %)	Oxygenate (volume %)
PADD 1 Premium	0.018	332	9.2	38.6	
PADD 2 Premium	0.014	333	6.0	34.3	
PADD 3 Premium	0.015	334	6.0	34.6	10% Ethanol.
PADD 4 Premium	0.040	319	6.0	22.3	
PADD 5 Premium	0.011	332	4.3	36.7	

(2) National and PADD certification test fuels must either be formulated to specification from normal refinery blend stocks, or drawn from finished gasoline supplies. The source of such samples must be normally-operating gasoline production or distribution facilities located in the U.S. Samples must not be drawn from a segregated gasoline pool that is or will be covered by a fuel-specific certification under § 80.163(c) on the date when the certification information under this option is submitted to EPA.

(3) To be eligible for use in detergent additive certification testing, in addition to the specifications above, national and PADD test fuels which are specially formulated from refinery blend stocks must themselves undergo testing to demonstrate their deposit-forming tendency. For this purpose, the unadditized, nonoxygenated test fuel must be subjected to the IVD control test procedure described in § 80.165(b). At the discretion of the tester, the duration of the demonstration test may be less than 10,000 miles, provided the results satisfy the standard of this paragraph. In order to qualify for use in certification testing, the formulated fuel's test results must meet or exceed the values shown in Table 4 for the relevant certification option. If the demonstration test results do not meet these criteria, then the formulated fuel may not be used for detergent certification testing.

TABLE 4—IVD DEMONSTRATION TEST CRITERIA

Certification option	Minimum required deposit level in IVD demonstration test (mg/valve, average)					
	National	PADD 1	PADD 2	PADD 3	PADD 4	PADD 5
Generic	290	290	260	290	260	260
Premium	260	260	235	260	235	235

(c) *Fuel-specific certification test fuels.* (1) Test fuels required for fuel-specific certification must contain levels of each of the four basic fuel parameters (aromatics, olefins, T–90, and fuel sulfur) at no less than their respective 65th percentile values in the segregated gasoline pool for which the detergent certification is sought in accordance with § 80.163(c). These values must be determined by the certifier as follows:

(i) At least once monthly for at least one complete year prior to the certification, the certifier must measure the levels of the required parameters in representative fuel samples contributed to the segregated gasoline pool by each participating refinery, terminal,

or other fuel production or distribution facility. The fuel parameters must be measured in accordance with the test procedures in § 80.46. If the applicability of the fuel-specific certification is to be limited to premium gasoline, then the required fuel compositional data must be collected only from samples of premium gasoline.

(ii) The fuel composition survey results, weighted according to the percentage of gasoline contributed to the segregated gasoline pool from each participating facility, shall be used to construct a percentile distribution of the measured values for each of the fuel parameters.

(iii) Data from more than one year may be used to construct the required statistical distribution provided that only the total data from complete consecutive years is used and that all survey data must have been collected within three years of the date the certification information is submitted to EPA.

(iv) At the discretion of the certifier, other fuel parameters may be used to define the certification test fuels in addition to the four required parameters. To be taken into account by EPA in case of confirmatory testing pursuant to § 80.167, such additional parameters must be surveyed and analyzed according to the same requirements applicable to the four standard parameters. In addition, any optional parameters must be measured using test procedures which conform to reasonable and customary standards of repeatability and reproducibility, and reasonable and customary limits of detection and accuracy for the type of test procedure or analytic procedure in question.

(v) Using the percentile distributions calculated from the survey data for the four required parameters and any additional discretionary parameters, the 65th percentile value for each such parameter shall be determined. Prior to the addition of any oxygenate compound, the fuel-specific certification test fuel shall contain each specified parameter at a level or concentration no less than this 65th percentile value. Test fuel oxygenate requirements for generic, nonoxygenate, and oxygenate-specific certification suboptions are specified in paragraph (a)(2) of this section.

(2) Fuel-specific certification test fuels must either be formulated to specification from the same refinery blend stocks which are normally used to blend the gasolines included in the subject gasoline pool, or drawn from the finished fuel supplies which contribute to this pool of gasoline. Fuel-specific certification test fuels need not undergo an IVD demonstration test prior to use in certification testing.

(3) The certifier must submit an annual report to EPA within 30 days of the anniversary of the initial certification effective date. Failure to submit the annual report by the required date will invalidate the fuel-specific certification and may subject the certifier to liability and penalties under §§ 80.169 and 80.172. The purpose of the annual report is to update the information on the composition of the segregated gasoline pool that was characterized by the initial fuel survey.

(i) For this purpose, the same fuel survey and statistical analysis requirements that were conducted pursuant to paragraphs (c)(1)(i),(ii), and (iv) of this section must be repeated, using data for the most current twelve-month period from each of the production/distribution facilities that contributed to the original fuel survey.

(ii) The annual report must present the percentile distributions for each fuel parameter as determined from the new survey data and, for each measured fuel parameter, must compare the newly determined 50th percentile value with the 60th percentile value for that parameter as determined in the original fuel survey.

(iii) If the new 50th percentile level for any fuel parameter is greater than or equal to the 60th percentile level reported in the initial certification, then the fuel-specific certification is no longer valid. In such instance, the certifier must immediately discontinue the sale and use of the subject detergent under the conditions of the fuel-specific certification and must immediately notify any downstream customers/recipients of the subject detergent that the certification is no longer valid and that their use of the detergent must discontinue within seven

days. To avoid liability and penalties under §§ 80.169 and 80.172, the certifier must take these remedial steps within 45 days of the anniversary of the original fuel-specific certification. Downstream customers/recipients must discontinue usage of the detergent within seven days of receipt of notification of the detergent's invalidity to avoid such liability.

(4) The fuel composition survey results which support the original test fuel specifications and the annual statistical analyses, along with related documentation on test methods and statistical procedures, shall be retained by the certifier for a period of at least five years, and shall be made available to EPA upon request.

[61 FR 35369, July 5, 1996]

§ 80.165 Certification test procedures and standards.

This section specifies the deposit control test requirements and performance standards which must be met in order to certify detergent additives for use in unleaded gasoline, pursuant to § 80.161(b)(1)(ii)(A)(*2*). These standards must be met in the context of the specific test procedures identified in paragraphs (a) and (b) of this section, except as provided in paragraph (c) of this section. In any case, the testing must be conducted and the performance standards met when the subject detergent additive is mixed in a test fuel meeting all relevant requirements of § 80.164, including the deposit-forming tendency demonstration specified in § 80.164(b)(3), if applicable. Complete test documentation must be submitted by the certifying party within 30 days of receipt of a written request from EPA for such records.

(a) *Fuel injector deposit control testing.* (1) The required test fuel must produce no more than 5% flow restriction in any one injector when tested in accordance with ASTM D 5598–94, ''Standard Test Method for Evaluating Unleaded Automotive Spark-Ignition Engine Fuel for Electronic Port Fuel Injector Fouling,'' 1994, which is incorporated by reference. This incorporation by reference was approved by the Director of the Federal Register in accordance with 5 U.S.C. 552(a) and 1 CFR part 51. Copies may be inspected at U.S. EPA, OAR, 401 M St., SW., Washington, DC 20460, or at the Office of the Federal Register, 800 North Capitol Street, NW., suite 700, Washington, DC. Copies of this material may be obtained from ASTM, 1916 Race St., Philadelphia, PA 19103.

(2) At the option of the certifier, fuel injector flow may be measured at intervals during the 10,000 mile test cycle described in ASTM D 5598–94, in addition to the flow measurements required at the completion of the test cycle, but not more than every 1,000 miles.

(b) *Intake valve deposit control testing.* The required test fuel must produce the accumulation of less than 100 mg of intake valve deposits on average when tested in accordance with ASTM D 5500–94, ''Standard Test Method for Vehicle Evaluation of Unleaded Automotive Spark-Ignition Engine Fuel for Intake Valve Deposit Formation,'' 1994, which is incorporated by reference. This incorporation by reference was approved by the Director of the Federal Register in accordance with 5 U.S.C. 552(a) and 1 CFR part 51. Copies may be inspected at U.S. EPA, OAR, 401 M St., SW., Washington, DC 20460, or at the Office of the Federal Register, 800 North Capitol Street, NW., suite 700, Washington, DC. Copies of this material may be obtained from ASTM, 1916 Race St., Philadelphia, PA 19103.

(c) If conducted using test fuels meeting all relevant requirements of § 80.164, and completed prior to September 3, 1996, then the PFID and IVD control test procedures required for detergent certification in California (specified in section 2257 of Title 13, California Code of Regulations) will also be considered acceptable. California Air Resources Board, ''Test Method for Evaluating Port Fuel Injector (PFI) Deposits in Vehicle Engines'', March 1, 1991, and California Air Resources Board, ''BMW—10,000 Miles Intake Valve Test Procedure'', March 1, 1991, are incorporated by reference. This incorporation by reference was approved by the Director of the Federal Register in accordance with 5 U.S.C. 552(a) and 1 CFR part 51. Copies may be inspected at U.S. EPA, OAR, 401 M St., SW., Washington, DC 20460, or at the Office of the Federal Register, 800 North Capitol Street, NW., suite 700,

Washington, DC. Copies of this material may be obtained from the California Air Resource Board, Stationary Source Division, 2020 L Street, PO Box 2815, Sacramento, CA, 95814.

[61 FR 35371, July 5, 1996]

§ 80.166 Carburetor deposit control performance test and test fuel guidelines.

EPA will use the guidelines in this section to evaluate the adequacy of carburetor deposit control test data, used to support the minimum concentration recommended for detergents used in leaded gasoline pursuant to § 80.161(b)(1)(ii)(B).

(a) *Carburetor Deposit Control Test Procedure and Performance Standard Guidelines*. For demonstration of carburetor deposit control performance, any generally accepted vehicle, engine, or bench test procedure and associated performance standard for carburetor deposit control will be considered adequate. Port and throttle body fuel injector deposit control test data will also be considered to be adequate demonstration of an additive's ability to control carburetor deposits. Examples of acceptable test procedures for demonstration of carburetor deposit control, in addition to the fuel injector test procedure listed in § 80.165(a), are contained in the following references:

(1) ''Test Method for Evaluating Port Fuel Injector (PFI) Deposits in Vehicle Engines'', March 1, 1991, Section 2257, Title 13, California Code of Regulations.

(2) ''A Vehicle Test Technique for Studying Port Fuel Injector Deposits—A Coordinating Research Council Program'', Robert Tupa et al., SAE Technical paper No. 890213, 1989.

(3) ''The Effects of Fuel Composition and Additives on Multiport Fuel Injector Deposits'', Jack Benson et al., SAE Technical Paper Series No. 861533, 1986.

(4) ''Injector Deposits—The Tip of Intake System Deposit Problems'', Brian Taneguchi, et al., SAE Technical Paper Series No. 861534, 1986.

(5) ''Fuel Injector, Intake Valve, and Carburetor Detergency Performance of Gasoline Additives'', C.H. Jewitt et al., SAE Technical Paper No. 872114, 1987.

(6) ''Carburetor Cleanliness Test Procedure, State-of-the-Art Summary, Report: 1973–1981'', Coordinating Research Council, CRC Report No. 529, Coordinating Research Council Inc. (CRC), 219 perimeter Center Parking, Atlanta, Georgia, 30346.

(b) *Carburetor Deposit Control Test Fuel Guidelines*. (1) The gasoline used in the tests described in paragraph (a) of this section must contain the detergent-active components of the subject detergent additive package in an amount which corresponds to the minimum recommended concentration recorded in the respective detergent registration, or less than this amount.

(2) The test fuel must not contain any detergent-active components other than those recorded in the subject detergent certification.

(3) The composition of the test fuel used in carburetor deposit control testing, conducted to support the claimed effectiveness of detergents used in leaded gasoline, should be reasonably typical of in-use gasoline in its tendency to form carburetor deposits (or more severe than typical in-use fuels) as defined by the olefin and sulfur content. A test fuel conforming to these compositional guidelines may be sampled directly from finished gasolines or may be blended to specification using typical refinery blend stocks. Test data using leaded fuels is preferred for this purpose, but data collected using unleaded fuels may also be acceptable provided that some correlation with additive performance in leaded fuels is available.

[61 FR 35372, July 5, 1996]

§ 80.167 Confirmatory testing.

EPA may test a detergent to confirm that the required performance levels are met. Based on the findings of this confirmatory testing, a detergent certification may be denied or revoked under the provisions of § 80.161(e).

(a) Confirmatory testing conducted to evaluate the validity of detergent certifications under the national, PADD, or fuel-specific options will generally entail a single vehicle test using the procedures detailed in § 80.165. The test fuel(s) used in conducting confirmatory certification testing will contain the specified fuel parameters at or below the minimum levels specified in § 80.164, and will otherwise conform to

the applicable certification test fuel specifications therein.

(b) Confirmatory certification testing conducted to evaluate the validity of CARB-based detergent certifications will use the subject detergent in test fuel(s) containing the relevant fuel parameters at levels no greater than the maximum levels for which the CARB certification was granted. The test procedures will be conducted pursuant to the procedures specified under section 2257 of Title 13, California Code of Regulations.

(c) Confirmatory testing conducted to evaluate the validity of registration and certification information specific to detergent use in leaded gasoline will use the subject detergent in a test fuel containing the test fuel parameters at levels no greater than those prescribed in § 80.164. EPA will make all reasonable efforts to use the same test procedure for confirmatory testing purposes as was used by the certifier in conducting deposit control performance testing.

(d) When EPA decides to conduct confirmatory testing on a fuel or additive which is not readily available in the open market, EPA may request that the detergent certifier and/or manufacturer of such fuel or additive furnish a sample in the needed quantity. If testing is conducted to evaluate the validity of a detergent certification under the fuel-specific option, the detergent blender must supply EPA with test fuel, or with blend stocks with which to formulate such test fuel, in sufficient quantity to conduct the specified deposit control performance testing. The fuel or additive manufacturer shall comply with a sample request made pursuant to this paragraph within 30 days of receipt of the request.

[61 FR 35372, July 5, 1996]

§ 80.168 Detergent certification program controls and prohibitions.

(a)(1) No person shall sell, offer for sale, dispense, supply, offer for supply, transport, or cause the transportation of gasoline to the ultimate consumer for use in motor vehicles or in any off-road engines (except as provided in § 80.173), or to a gasoline retailer or wholesale purchaser-consumer, and no person shall detergent-additize gasoline, unless such gasoline is additized in conformity with the requirements of § 80.161. No person shall cause the presence of any gasoline in the gasoline distribution system unless such gasoline is additized in conformity with the requirements of § 80.161.

(2) Gasoline has been additized in conformity with the requirements of § 80.161 when the detergent component satisfies the requirements of § 80.161 and when:

(i) The gasoline has been additized in conformity with the detergent composition and purpose-in-use specifications of a detergent certified in accordance with this subpart, and in accordance with at least the minimum concentration specifications of that detergent as certified or as otherwise provided under § 80.161(d); or

(ii) The gasoline is composed of two or more commingled gasolines and each component gasoline has been additized in conformity with the detergent composition and purpose-in-use specifications of a detergent certified in accordance with this subpart, and in accordance with at least the minimum concentration specifications of that detergent as certified or as otherwise provided under § 80.161(d); or

(iii) The gasoline is composed of a gasoline commingled with a post-refinery component (PRC), and both of these components have been additized in conformity with the detergent composition and use specifications of a detergent certified in accordance with this subpart, and in accordance with at least the minimum concentration specifications of that detergent as certified or as otherwise provided under § 80.161(d).

(b) No person shall blend detergent into gasoline or PRC unless such person complies with the volumetric additive reconciliation requirements of § 80.170.

(c) No person shall sell, offer for sale, dispense, supply, offer for supply, store, transport, or cause the transportation of any gasoline, detergent, or detergent-additized PRC, unless the product transfer document for the gasoline, detergent or detergent-additized PRC complies with the requirements of § 80.171.

(d) No person shall refine, import, manufacture, sell, offer for sale, dispense, supply, offer for supply, store, transport, or cause the transportation of any detergent that is to be used as a component of detergent-additized gasoline or detergent-additized PRC unless such detergent conforms with the composition specifications of a detergent certified in accordance with this subpart and the detergent otherwise complies with the requirements of § 80.161. No person shall cause the presence of any detergent in the detergent, PRC, or gasoline distribution systems unless such detergent complies with the requirements of § 80.161.

(e)(1) No person shall sell, offer for sale, dispense, supply, offer for supply, transport, or cause the transportation of detergent-additized PRC unless the PRC has been additized in conformity with the requirements of § 80.161. No person shall cause the presence in the PRC or gasoline distribution systems of any detergent-additized PRC that fails to conform to the requirements of § 80.161.

(2) PRC has been additized in conformity with the requirements of § 80.161 when the detergent component satisfies the requirements of § 80.161 and when:

(i) The PRC has been additized in accordance with the detergent composition and use specifications of a detergent certified in accordance with this subpart and in conformity with at least the minimum concentration specifications of that detergent as certified or as otherwise provided under § 80.161(d), or

(ii) The PRC is composed of two or more commingled PRCs, and each component has been additized in accordance with the detergent composition and use specifications of a detergent certified in accordance with this subpart, and in conformity with at least the minimum concentration specifications of that detergent as certified or as otherwise provided under § 80.161(d).

[61 FR 35373, July 5, 1996]

§ 80.169 Liability for violations of the detergent certification program controls and prohibitions.

(a) *Persons Liable*—(1) *Gasoline nonconformity*. Where gasoline contained in any storage tank at any facility owned, leased, operated, controlled or supervised by any gasoline refiner, importer, carrier, distributor, reseller, retailer, wholesale purchaser-consumer, oxygenate blender, or detergent blender, is found in violation of any of the prohibitions specified in § 80.168(a), the following persons shall be deemed in violation:

(i) Each gasoline refiner, importer, carrier, distributor, reseller, retailer, wholesale purchaser-consumer, oxygenate blender, or detergent blender, who owns, leases, operates, controls or supervises the facility (including, but not limited to, a truck or individual storage tank) where the violation is found;

(ii) Each gasoline refiner, importer, distributor, reseller, retailer, wholesale purchaser-consumer, oxygenate blender, detergent manufacturer, distributor, or blender, who refined, imported, manufactured, sold, offered for sale, dispensed, supplied, offered for supply, stored, detergent additized, transported, or caused the transportation of the detergent-additized gasoline (or the base gasoline component, the detergent component, or the detergent-additized post-refinery component of the gasoline) that is in violation, and each such party that caused the gasoline that is in violation to be present in the gasoline distribution system; and

(iii) Each gasoline carrier who dispensed, supplied, stored, or transported any gasoline in the storage tank containing gasoline found to be in violation, and each detergent carrier who dispensed, supplied, stored, or transported the detergent component of any PRC or gasoline in the storage tank containing gasoline found to be in violation, provided that EPA demonstrates, by reasonably specific showings by direct or circumstantial evidence, that the gasoline or detergent carrier caused the violation.

(2) *Post-refinery component non-conformity*. Where detergent-additized PRC contained in any storage tank at any facility owned, leased, operated, controlled or supervised by any gasoline refiner, importer, carrier, distributor, reseller, retailer, wholesale purchaser-

consumer, oxygenate blender, detergent manufacturer, carrier, distributor, or blender, is found in violation of the prohibitions specified in § 80.168(e), the following persons shall be deemed in violation:

(i) Each gasoline refiner, importer, carrier, distributor, reseller, retailer, wholesale-purchaser consumer, oxygenate blender, detergent manufacturer, carrier, distributor, or blender, who owns, leases, operates, controls or supervises the facility (including, but not limited to, a truck or individual storage tank) where the violation is found;

(ii) Each gasoline refiner, importer, distributor, reseller, retailer, wholesale purchaser-consumer, oxygenate blender, detergent manufacturer, distributor, or blender, who sold, offered for sale, dispensed, supplied, offered for supply, stored, detergent additized, transported, or caused the transportation of the detergent-additized PRC (or the detergent component of the PRC) that is in violation, and each such party that caused the PRC that is in violation to be present in the PRC or gasoline distribution systems; and

(iii) Each carrier who dispensed, supplied, stored, or transported any detergent-additized PRC in the storage tank containing PRC that is in violation, and each detergent carrier who dispensed, supplied, stored, or transported the detergent component of any detergent-additized PRC which is in the storage tank containing detergent-additized PRC found to be in violation, provided that EPA demonstrates by reasonably specific showings by direct or circumstantial evidence, that the gasoline or detergent carrier caused the violation.

(3) *Detergent non-conformity*. Where the detergent (prior to additization) contained in any storage tank or container found at any facility owned, leased, operated, controlled or supervised by any gasoline refiner, importer, carrier, distributor, reseller, retailer, wholesale purchaser-consumer, oxygenate blender, detergent manufacturer, carrier, distributor, or blender, is found in violation of the prohibitions specified in § 80.168(d), the following persons shall be deemed in violation:

(i) Each gasoline refiner, importer, carrier, distributor, reseller, retailer, wholesale purchaser-consumer, oxygenate blender, detergent manufacturer, carrier, distributor, or blender, who owns, leases, operates, controls or supervises the facility (including, but not limited to, a truck or individual storage tank) where the violation is found;

(ii) Each gasoline refiner, importer, distributor, reseller, retailer, wholesale purchaser-consumer, oxygenate blender, detergent manufacturer, distributor, or blender, who sold, offered for sale, dispensed, supplied, offered for supply, stored, transported, or caused the transportation of the detergent that is in violation, and each such party that caused the detergent that is in violation to be present in the detergent, gasoline, or PRC distribution systems; and

(iii) Each gasoline or detergent carrier who dispensed, supplied, stored, or transported any detergent which is in the storage tank or container containing detergent found to be in violation, provided that EPA demonstrates, by reasonably specific showings by direct or circumstantial evidence, that the gasoline or detergent carrier caused the violation.

(4) *Volumetric additive reconciliation*. Where a violation of the volumetric additive reconciliation requirements established by § 80.168(b) has occurred, the following persons shall be deemed in violation:

(i) Each detergent blender who owns, leases, operates, controls or supervises the facility (including, but not limited to, a truck or individual storage tank) where the violation has occurred; and

(ii) Each gasoline refiner, importer, carrier, distributor, reseller, retailer, wholesale purchaser-consumer, or oxygenate blender, and each detergent manufacturer, carrier, distributor, or blender, who refined, imported, manufactured, sold, offered for sale, dispensed, supplied, offered for supply, stored, transported, or caused the transportation of the detergent-additized gasoline, the base gasoline component, the detergent component, or the detergent-additized PRC of the gasoline that is in violation, provided that EPA demonstrates, by reasonably specific showings by direct or circumstantial evidence, that such person caused the violation.

(5) *Product transfer document*. Where a violation of § 80.168(c) is found at a facility owned, leased, operated, controlled, or supervised by any gasoline refiner, importer, carrier, distributor, reseller, retailer, wholesale purchaser-consumer, oxygenate blender, detergent manufacturer, carrier, distributor, or blender, the following persons shall be deemed in violation: each gasoline refiner, importer, carrier, distributor, reseller, retailer, wholesale purchaser-consumer, oxygenate blender, detergent manufacturer, carrier, distributor, or blender, who owns, leases, operates, control or supervises the facility (including, but not limited to, a truck or individual storage tank) where the violation is found.

(b) *Branded Refiner Vicarious Liability*. Where any violation of the prohibitions specified in § 80.168 has occurred, with the exception of violations of § 80.168(c), a refiner will also be deemed liable for violations occurring at a facility operating under such refiner's corporate, trade, or brand name or that of any of its marketing subsidiaries. For purposes of this section, the word facility includes, but is not limited to, a truck or individual storage tank.

(c) *Defenses*. (1) In any case in which a gasoline refiner, importer, distributor, carrier, reseller, retailer, wholesale purchaser-consumer, oxygenate blender, detergent distributor, carrier, or blender, is in violation of any of the prohibitions of § 80.168, pursuant to paragraph (a) or (b) of this section as applicable, the regulated party shall be deemed not in violation if it can demonstrate:

(i) That the violation was not caused by the regulated party or its employee or agent (unless otherwise provided in this paragraph (c));

(ii) That product transfer documents account for the gasoline, detergent, or detergent-additized PRC in violation and indicate that the gasoline, detergent, or detergent-additized PRC satisfied relevant requirements when it left the party's control; and

(iii) That the party has fulfilled the requirements of paragraphs (c) (2) or (3) of this section, as applicable.

(2) *Branded refiner*. Where a branded refiner is in violation of any of the prohibitions of § 80.168 as a result of violations occurring at a facility (including, but not limited to, a truck or individual storage tank) which is operating under the corporate, trade or brand name of a refiner or that of any of its marketing subsidiaries, the refiner shall be deemed not in violation if it can demonstrate, in addition to the defense requirements stated in paragraph (c)(1) of this section, that the violation was caused by:

(i) An act in violation of law (other than these regulations), or an act of sabotage or vandalism, whether or not such acts are violations of law in the jurisdiction where the violation of the prohibitions of § 80.168 occurred; or

(ii) The action of any gasoline refiner, importer, reseller, distributor, oxygenate blender, detergent manufacturer, distributor, blender, or retailer or wholesale purchaser-consumer supplied by any of these persons, in violation of a contractual undertaking imposed by the refiner designed to prevent such action, and despite the implementation of an oversight program, including, but not limited to, periodic review of product transfer documents by the refiner to ensure compliance with such contractual obligation; or

(iii) The action of any gasoline or detergent carrier, or other gasoline or detergent distributor not subject to a contract with the refiner but engaged by the refiner for transportation of gasoline, PRC, or detergent, to a gasoline or detergent distributor, oxygenate blender, detergent blender, gasoline retailer or wholesale purchaser consumer, despite specification or inspection of procedures or equipment by the refiner which are reasonably calculated to prevent such action.

(iv) In this paragraph (c)(2), to show that the violation ''was caused'' by any of the specified actions, the party must demonstrate by reasonably specific showings, by direct or circumstantial evidence, that the violation was caused or must have been caused by another.

(3) *Detergent blender*. In any case in which a detergent blender is liable for violating any of the prohibitions of § 80.168, the detergent blender shall not be deemed in violation if it can demonstrate, in addition to the defense requirements stated in paragraph (c)(1) of this section, the following:

(i) That it obtained or supplied, as appropriate, prior to the detergent blending, accurate written instructions from the detergent manufacturer or other party with knowledge of such instructions, specifying the appropriate LAC for the detergent, as specified in § 80.161(b)(1)(ii), together with any use restrictions which pertain to this LAC pursuant to the detergent's certification; and

(ii) That it has implemented a quality assurance program that includes, but is not limited to, a periodic review of its supporting product transfer and volume measurement documents to confirm the correctness of its product transfer and volumetric additive reconciliation documents created for all products it additized.

(4) *Detergent manufacturer*. (i) *Presumptive Liability Affirmative Defense.* Notwithstanding the provisions of paragraph (c)(1) of this section, in any case in which a detergent manufacturer is liable for violating any of the prohibitions of § 80.168, the detergent manufacturer shall be deemed not in violation if it can demonstrate each of the following:

(A) Product transfer documents which account for the detergent component of the product in violation and which indicate that such detergent satisfied all relevant requirements when it left the detergent manufacturer's control.

(B) Written blending instructions which, pursuant to § 80.161(c), were supplied by the detergent manufacturer to its customer who purchased or obtained from the manufacturer the detergent component of the product determined to be in violation. The written blending instructions must have been supplied by the manufacturer prior to the customer's use or sale of the detergent. The instructions must accurately specify both the appropriate LAC for the detergent, pursuant to § 80.161(b)(1)(ii), plus any use restrictions which may pertain to this LAC pursuant to the detergent's certification.

(C) If the detergent batch used in the noncomplying product was produced less than one year before the manufacturer was notified by EPA of the possible violation, then the manufacturer must provide FTIR test results for the batch in question.

(*1*) The FTIR analysis may have been conducted on the subject detergent batch at the time it was manufactured, or may be conducted on a sample of that batch which the manufacturer retained for such purpose at the time the batch was manufactured.

(*2*) To establish that, when it left the manufacturer's control, the detergent component of the noncomplying product was in conformity with the chemical composition and concentration specifications reported pursuant to § 80.161(b), the FTIR test results for the detergent batch used in the noncomplying product must, in EPA's judgment, be consistent with the FTIR results submitted at the time of registration pursuant to § 80.162(d).

(D) If the detergent batch used in the noncomplying product was produced more than one year prior to the manufacturer's notification by EPA of the possible violation, then the manufacturer must provide either:

(*1*) FTIR test results for the batch in question as specified in the preceding paragraph (c)(4)(i)(C) of this § 80.169(c); or

(*2*) The following materials:

(*i*) Documentation for the batch in question, showing that its measured viscosity, density, and basic nitrogen content, or any other such physical parameter(s) which EPA may have approved for monitoring production quality control, were within the acceptable range of production values specified in the certification pursuant to § 80.162(e); and

(*ii*) If the detergent registration identifies polymeric component(s) of the detergent package as the product(s) of other chemical reactants, documentation that the reagents used to synthesize the detergent batch in question were the same as those specified in the registration and that they met the manufacturer's normal acceptance criteria reported pursuant to § 80.162(b)(1).

(ii) *Detergent manufacturer causation liability*. In any case in which a detergent manufacturer is liable for a violation of § 80.168, and the manufacturer establishes an affirmative defense to such liability pursuant to

§ 80.169(c)(4)(i), the detergent manufacturer will nonetheless be deemed liable for the violation of § 80.168 if EPA can demonstrate, by reasonably specific showings by direct or circumstantial evidence, that the detergent manufacturer caused the violation.

(5) *Defense against liability where more than one party may be liable for VAR violations.* In any case in which a party is presumptively or vicariously liable for a violation of § 80.170, except for the VAR record requirements pursuant to § 80.170(g), such party shall not be deemed liable if it can establish the following:

(i) Prior to the violation it had entered into a written contract with another potentially liable detergent blender party (''the assuming party''), under which that other party assumed legal responsibility for fulfilling the VAR requirement that had been violated;

(ii) The contract included reasonable oversight provision to ensure that the assuming party fulfilled its VAR responsibilities (including, but not limited to, periodic review of VAR records) and the oversight provision was actually implemented by the party raising the defense;

(iii) The assuming party is fiscally sound and able to pay its penalty for the VAR violation; and

(iv) The employees or agents of the party raising the defense did not cause the violation.

(6) *Defense to liability for gasoline nonconformity violations caused solely by the addition of misadditized ethanol or other PRC to the gasoline.* In any case in which a party is presumptively or vicariously liable for a gasoline non-conformity violation of § 80.168(a) caused solely by another party's addition of misadditized ethanol or other PRC to the gasoline, the former party shall not be deemed liable for the violation, provided that it can establish that it has fulfilled the defense requirements of paragraphs (c)(1) (i) and (ii) of this section.

(7) *Detergent tank transitioning defenses.* The commingling of two detergents in the same detergent storage tank will not be deemed to violate or cause violations of any of the provisions of this subpart, provided the following conditions are met:

(i) The commingling must occur during a legitimate detergent transitioning event, *i.e.*, a shift from the use of one detergent to another through the delivery of the new detergent into the same tank that contains the original detergent; and

(ii) Any use restrictions applicable to the new detergent's certification also apply to the combined detergents; and

(iii) The commingling event must be documented, either on the VAR formula record or on attached supporting records; and

(iv) Notwithstanding any contrary provisions in § 80.170, a VAR formula record must be created for the combined detergents. The VAR compliance period must begin no later than the time of the commingling event. However, at the blender's option, the compliance period may begin earlier, thus including use of the uncombined original detergent within the same period, provided that the 31-day limitation pursuant to § 80.170(a)(6) is not exceeded; and

(v) The VAR formula record must also satisfy the requirements in one of the following paragraphs (c)(7)(v) (A) through (C) of this section, whichever applies to the commingling event. If neither paragraph (c)(7)(v) (A) nor (B) of this section initially applies, then the blender may drain and subsequently redeliver the original detergent into the tank in restricted amounts, in order to meet the conditions of paragraph (c)(7)(v) (A) or (B) of this section. Otherwise, the blender must comply with paragraph (c)(7)(v)(C) of this section.

(A) If both detergents have the same LAC, and the original detergent accounts for no more than 20 percent of the tank's total delivered volume after addition of the new detergent, then the VAR formula record is required to identify only the use of the new detergent.

(B) If the two detergents have different LACs and the original detergent accounts for 10 percent or less of the tank's total delivered volume after addition of the new detergent, then the VAR formula record is required to

identify only the use of the new detergent, and must attain the LAC of the new detergent. If the original detergent's LAC is greater than that of the new detergent, then the compliance period may begin earlier than the date of the commingling event (pursuant to paragraph (c)(7)(iv) of this section) only if the original detergent does not exceed 10 percent of the total detergent used during the compliance period.

(C) If neither of the preceding paragraphs (c)(7)(v) (A) or (B) of this section applies, then the VAR formula record must identify both of the commingled detergents, and must use and attain the higher LAC of the two detergents. Once the commingled detergent has been depleted by an amount equal to the volume of the original detergent in the tank at the time the new detergent was added, subsequent VAR formula records must identify and use the LAC of only the new detergent.

(8) *Transition from noncertified to certified detergent*. Notwithstanding the prohibitions in §§ 80.161(a)(3) and 80.168, after June 30, 1997, the addition to gasoline or PRC of a detergent which has not been certified pursuant to § 80.161 shall not be deemed to violate or cause violations of provisions of this subpart, provided that all of the following conditions are met:

(i) The detergent was received by the detergent blender prior to July 1, 1997 and is used prior to January 1, 1998. Documentation which supports these dates must be maintained for at least five years and must be available for EPA's inspection upon request;

(ii) The detergent is added to gasoline or PRC only in combination with a certified detergent and, at any one time, accounts for no more than 10 percent of the detergent tank's delivered volume;

(iii) The total volume of detergent added to the gasoline or PRC is sufficient to attain the LAC of the certified detergent; and

(iv) Use restrictions associated with the certified detergent are adhered to.

(9) *Procedures for curing use restrictions*. In the case of a fuel product which has been additized with a detergent under the conditions of a use-restricted certification (pursuant to § 80.163), the use restriction can be negated (''cured'') by application of the procedures in this paragraph (c)(9). A party shall not be liable for violations of § 80.168(a) or (e) caused solely by the additization or subsequent use of gasoline or PRC in violation of such use restriction, provided that the following steps and conditions are applied before EPA has identified the nonconformity and prior to the sale or transfer of nonconforming product to the ultimate consumer:

(i) Additional detergent must be added in sufficient quantity to provide effective deposit control, taking into account both the amount of detergent previously added and the final anticipated volume and composition of the subject fuel product.

(ii) The additional detergent may be either the original detergent or a different detergent, so long as the additional detergent has been separately certified both for use with the subject fuel product and for use with the type of fuel product associated with the restriction which the party wishes to negate by the curing procedure. Detergents which have not been separately certified for both types of fuel products are not eligible to be used for this curing procedure.

(iii) If a fuel product has been detergent additized under the conditions of a use-restricted certification which would preclude the addition of an oxygenate or other PRC, then such oxygenate or other PRC may nevertheless be added to that fuel product under this curing procedure, provided that additional eligible detergent is added, in an amount which equals or exceeds the number of gallons (D_A) derived from the following equation:

$$\text{Additional Detergent Volume} = D_A = Vp(LAC_2 - LAC_1) + V(1 - p)LAC_2$$

where:

V = Final volume of fuel product (in gallons)

p = Fraction of final fuel product composed of the original (uncombined) fuel product

LAC_2 = Detergent's LAC certified for the final combined fuel product (in gallons of detergent per 1,000 gallons of fuel product)

LAC_1 = Detergent's LAC certified for the original (uncombined) fuel product (in gallons of detergent per 1,000 gallons of fuel product)

(iv) In other instances in which gasoline or PRC has been additized in violation of a detergent use restriction, and no additional fuel components are to be added, such use restriction can be cured by the addition of eligible detergent in an amount which equals or exceeds the number of gallons (DA) derived from the following equation, which is a simplified version of the previous equation:

$$\text{Additional Detergent Volume} = D_A = V(LAC_2 - LAC_1)$$

where:

V = Volume of fuel product (in gallons) to be cured of the use restriction

LAC_2 = Detergent's LAC certified for the fuel product without the use restriction (in gallons of detergent per 1,000 gallons of fuel product)

LAC_1 = Detergent's LAC certified for the fuel product with the use restriction to be cured (in gallons of detergent per 1,000 gallons of fuel product)

(v) In all such instances, a curing VAR must be created and maintained, which documents the use of the appropriate equation as specified above, and otherwise complies with the requirements of § 80.170(f)(6).

[61 FR 35373, July 5, 1996, as amended at 61 FR 58747, Nov. 18, 1996]

§ 80.170 Volumetric additive reconciliation (VAR), equipment calibration, and recordkeeping requirements.

This section contains requirements for automated detergent blending facilities and hand-blending detergent facilities. All gasoline and all PRC intended for use in gasoline must be additized unless otherwise noted in supporting VAR records, and must be accounted for in VAR records. The VAR reconciliation standard is attained under this section when the actual concentration of detergent used per VAR formula record equals or exceeds the applicable LAC certified for that detergent pursuant to § 80.161(b)(3)(ix) or, if appropriate, § 80.161(d). If a given detergent package has been certified under more than one certification option pursuant to § 80.163, then a separate VAR formula record must be created for gasoline or PRC additized on the basis of each certification and its respective LAC. In such cases, the amount of the detergent used under different certification options must be accurately and separately measured, either through the use of a separate storage tank, a separate meter, or some other measurement system that is able to accurately distinguish its use. Recorded volumes of gasoline, detergent, and PRC must be expressed to the nearest gallon (or smaller units), except that detergent volumes of five gallons or less must be expressed to the nearest tenth of a gallon (or smaller units). However, if the blender's equipment cannot accurately measure to the nearest tenth of a gallon, then such volumes must be rounded downward to the next lower gallon. PRC included in the reconciliation must be identified. Each VAR formula record must also contain the following information:

(a) *Automated blending facilities.* In the case of an automated detergent blending facility, for each VAR period, for each detergent storage system and each detergent in that storage system, the following must be recorded:

(1) The manufacturer and commercial identifying name of the detergent additive package being reconciled, the LAC, and any use restriction applicable to the LAC. The LAC must be expressed in terms of gallons of detergent per thousand gallons of gasoline or PRC, and expressed to four digits. If the detergent storage system which is the subject of the VAR formula record is a proprietary system under the control of a customer, this fact must be indicated on the record.

(2) The total volume of detergent blended into gasoline and PRC, in accordance with one of the following paragraphs (a)(2)(i) or (ii) of this section, as applicable.

(i) For a facility which uses in-line meters to measure detergent usage, the total volume of detergent measured, together with supporting data which includes one of the following: the beginning and ending meter readings for each meter being measured, the metered batch volume measurements for each meter being measured, or other comparable metered measurements. The supporting data may be supplied on the VAR formula record or in the form of computer printouts or other

comparable VAR supporting documentation.

(ii) For a facility which uses a gauge to measure the inventory of the detergent storage tank, the total volume of detergent shall be calculated from the following equation:

Detergent Volume = (A) − (B) + (C) − (D)

where:

A = Initial detergent inventory of the tank
B = Final detergent inventory of the tank
C = Sum of any additions to detergent inventory
D = Sum of any withdrawals from detergent inventory for purposes other than the additization of gasoline or PRC.

The value of each variable in this equation must be separately recorded on the VAR formula record. In addition, a list of each detergent addition included in variable C and a list of each detergent withdrawal included in variable D must be provided, either on the formula record or as VAR supporting documentation.

(3) The total volume of gasoline plus PRC to which detergent has been added, together with supporting data which includes one of the following: the beginning and ending meter measurements for each meter being measured, the metered batch volume measurements for each meter being measured, or other comparable metered measurements. The supporting data may be supplied on the VAR formula record or in the form of computer printouts or other comparable VAR supporting documentation. If gasoline has intentionally been overadditized in anticipation of the later addition of unadditized PRC, then the total volume of gasoline plus PRC recorded must include the expected amount of unadditized PRC to be added later. In addition, the amount of gasoline which was overadditized for this purpose must be specified.

(4) The actual detergent concentration, calculated as the total volume of detergent added (pursuant to paragraph (a)(2) of this section), divided by the total volume of gasoline plus PRC (pursuant to paragraph (a)(3) of this section). The concentration must be calculated and recorded to four digits.

(5) A list of each detergent concentration rate initially set for the detergent that is the subject of the VAR record, together with the date and description of each adjustment to any initially set concentration. The concentration adjustment information may be supplied on the VAR formula record or in the form of computer printouts or other comparable VAR supporting documentation. No concentration setting is permitted below the applicable certified LAC, except as may be modified pursuant to § 80.161(d) or as described in paragraph (a)(7) of this section.

(6) The dates of the VAR period, which shall be no longer than thirty-one days. If the VAR period is contemporaneous with a calendar month, then specifying the month will fulfill this requirement; if not, then the beginning and ending dates and times of the VAR period must be listed. The times may be supplied on the VAR formula record or in supporting documentation. Any adjustment to any detergent concentration rate more than 10 percent over the concentration rate initially set in the VAR period shall terminate that VAR period and initiate a new VAR period, except as provided in paragraph (a)(7) of this section.

(7) The concentration setting for a detergent injector may be set below the applicable LAC, or it may be adjusted more than 10 percent above the concentration initially set in the VAR period without terminating that VAR period, provided that:

(i) The purpose of the change is to correct a batch misadditization prior to the end of the VAR period and prior to the transfer of the batch to another party, or to correct an equipment malfunction; and

(ii) The concentration is immediately returned after the correction to a concentration that fulfills the requirements of paragraphs (a) (5) and (6) of this section; and

(iii) The blender creates and maintains documentation establishing the date and adjustments of the correction; and

(iv) If the correction is initiated only to rectify an equipment malfunction, and the amount of detergent used in this procedure is not added to gasoline

within the compliance period, then this amount is subtracted from the detergent volume listed on the VAR formula record.

(8) If unadditized gasoline has been transferred from the facility, other than bulk transfers from refineries or pipelines to non-retail outlets or non-WPC facilities, the total amount of such gasoline must be specified.

(b) *Non-automated facilities.* In the case of a facility in which hand blending or any other non-automated method is used to blend detergent, for each detergent and for each batch of gasoline and each batch of PRC to which the detergent is being added, the following shall be recorded:

(1) The manufacturer and commercial identifying name of the detergent additive package being reconciled, the LAC, and any use restriction applicable to the LAC. The LAC must be expressed in terms of gallons of detergent per thousand gallons of gasoline or PRC, and expressed to four digits.

(2) The date of the additization that is the subject of the VAR formula record.

(3) The volume of added detergent.

(4) The volume of the gasoline and/or PRC to which the detergent has been added. If gasoline has intentionally been overadditized in anticipation of the later addition of unadditized PRC, then the total volume of gasoline plus PRC recorded must include the expected amount of unadditized PRC to be added later. In addition, the amount of gasoline which was overadditized for this purpose must be specified.

(5) The brand (if known), grade, and leaded/unleaded status of gasoline, and/or the type of PRC.

(6) The actual detergent concentration, calculated as the volume of added detergent (pursuant to paragraph (b)(3) of this section), divided by the volume of gasoline and/or PRC (pursuant to paragraph (b)(4) of this section). The concentration must be calculated and recorded to four digits.

(c) Every VAR formula record created pursuant to paragraphs (a) and (b) of this section shall contain the following:

(1) The signature of the creator of the VAR record;

(2) The date of the creation of the VAR record; and

(3) A certification of correctness by the creator of the VAR record.

(d) Electronically-generated VAR formula and supporting records.

(1) Electronically-generated records are acceptable for VAR formula records and supporting documentation (including PTDs), provided that they are complete, accessible, and easily readable. VAR formula records must also be stored with access and audit security, which must restrict to a limited number of specified people those who have the ability to alter or delete the records. In addition, parties maintaining records electronically must make available to EPA the hardware and software necessary to review the records.

(2) Electronically-generated VAR formula records may use an electronic user identification code to satisfy the signature requirements of paragraph (c)(1) of this section, provided that:

(i) The use of the ID is limited to the record creator; and

(ii) A paper record is maintained, which is signed and dated by the VAR formula record creator, acknowledging that the use of that particular user ID on a VAR formula record is equivalent to his/her signature on the document.

(e) Automated detergent blenders must calibrate their detergent equipment once in each calendar half year, with the acceptable calibrations being no less than one hundred twenty days apart. Equipment recalibration is also required each time the detergent package is changed, unless written documentation indicates that the new detergent package has the same viscosity as the previous detergent package. Detergent package change calibrations may be used to satisfy the semiannual requirement provided that the calibrations occur in the appropriate half calendar year and are no less than one hundred twenty days apart.

(f) The following VAR supporting documentation must also be created and maintained:

(1) For all automated detergent blending facilities, documentation reflecting performance of the calibrations required by paragraph (e) of this

section, and any associated adjustments of the automated detergent equipment;

(2) For all hand-blending facilities which are terminals, a record specifying, for each VAR period, the total volume in gallons of transfers from the facility of unadditized base gasoline;

(3) For all detergent blending facilities, product transfer documents for all gasoline, detergent and detergent-additized PRC transferred into or out of the facility; in addition, bills of lading, transfer, or sale for all unadditized PRC transferred into the facility;

(4) For all automated detergent blending facilities, documentation establishing the brands (if known) and grades of the gasoline which is the subject of the VAR formula record; and

(5) For all hand blending detergent blenders, the documentation, if in the party's possession, supporting the volumes of gasoline, PRC, and detergent reported on the VAR formula record.

(6) For all detergent blending facilities, documentation establishing the curing of a batch or amount of misadditized gasoline or PRC, or the curing of a use restriction on the additized gasoline or PRC, and providing at least the following information: the date of the curing procedure; the problem that was corrected; the amount, name, and LAC of the original detergent used; the amount, name, and LAC of the added curing detergent; and the actual detergent concentration attained in, and the volume of, the total cured product.

(g) Document retention and availability. All detergent blenders shall retain the documents required under this section for a period of five years from the date the VAR formula records and supporting documentation are created, and shall deliver them upon request to the EPA Administrator or the Administrator's authorized representative.

(1) Except as provided in paragraph (g)(3) of this section, automated detergent blender facilities and hand-blender facilities which are terminals, which physically blend detergent into gasoline, must make immediately available to EPA, upon request, the preceding twelve months of VAR formula records plus the preceding two months of VAR supporting documentation.

(2) Except as provided in paragraph (g)(3) of this section, other hand-blending detergent facilities which physically blend detergent into gasoline must make immediately available to EPA, upon request, the preceding two months of VAR formula records and VAR supporting documentation.

(3) Facilities which have centrally maintained records at other locations, or have customers who maintain their own records at other locations for their proprietary detergent systems, and which can document this fact to the Agency, may have until the start of the next business day after the EPA request to supply VAR supporting documentation, or longer if approved by the Agency.

(4) In this paragraph (g) of this section, the term *immediately available* means that the records must be provided, electronically or otherwise, within approximately one hour of EPA's request, or within a longer time frame as approved by EPA.

[61 FR 35377, July 5, 1996]

§ 80.171 Product transfer documents (PTDs).

(a) *Contents*. For each occasion when any gasoline refiner, importer, reseller, distributor, carrier, retailer, wholesale purchaser-consumer, oxygenate blender, detergent manufacturer, distributor, carrier, or blender, transfers custody or title to any gasoline, detergent, or detergent-additized PRC other than when detergent-additized gasoline is sold or dispensed at a retail outlet or wholesale purchaser-consumer facility to the ultimate consumer, the transferor shall provide to the transferee, and the transferee shall acquire from the transferor, documents which accurately include the following information:

(1) The name and address of the transferee and transferor; the address requirement may be fulfilled, in the alternative, through separate documentation which establishes said addresses and is maintained by the parties and made available to EPA for the same length of time as required for the PTDs, provided that the normal business procedure of these parties is not to identify addresses on PTDs.

(2) The date of the transfer.

(3) The volume of product transferred.

(4)(i) The identity of the product being transferred (*i.e.*, its identity as base gasoline, detergent, detergent-additized gasoline, or specified detergent-additized oxygenate or detergent-additized gasoline blending stock that comprises a detergent-additized PRC). PTDs for detergent-additized gasoline or PRC are not required to identify the particular detergent used to additize the product.

(ii) If the product being transferred consists of two or more different types of product subject to this regulation, *i.e.*, base gasoline, detergent-additized gasoline, or specified detergent-additized PRC, component, then the PTD for the commingled product must identify each such type of component contained in the commingled product.

(5) If the product being transferred is base gasoline, then in addition to the base gasoline identification, the following warning must be stated on the PTD: ''Not for sale to the ultimate consumer''. If, pursuant to § 80.173(a), the product being transferred is exempt base gasoline to be used for research, development, or test purposes only, the following warning must also be stated on the PTD: ''For use in research, development, and test programs only''.

(6) The name of the detergent additive as reported in its registration must be used to identify the detergent package on its PTD.

(7) If the product being transferred is leaded gasoline, then the PTD must disclose that the product contains lead and/or phosphorous, as applicable.

(8) If the product being transferred is gasoline or PRC that has been additized with detergent under a PADD-specific or CARB-based certification, or under a certification option which creates an oxygenate or PRC use restriction, then the PTD for the additized product must identify the applicable use restriction. The PTD for commingled additized gasolines or PRCs containing such restrictions must indicate the applicable restriction(s) from each component.

(9) If the product being transferred is detergent-additized gasoline or PRC that has been overadditized in anticipation of the later (or earlier) addition of PRC, then the PTD must include a statement that the product has been overadditized to account for a specified volume in gallons, or a specified percentage of the product's total volume, of additional, specified PRC.

(10) If a detergent package has been certified under only one certification option, and that option places a use restriction on the respective LAC, then the PTD must identify the detergent as use-restricted; the PTD for a detergent package certified with more than one LAC must identify that the detergent has special use options available.

(11) Base gasoline designated for fuel-specific certification.

(i) The PTD for segregated base gasoline intended for additization with a specific fuel-specific detergent pursuant to § 80.163(c) must indicate that it is for use with the designated, fuel-specific detergent.

(ii) A PTD for base gasoline may not indicate that the product is for use with a designated, fuel-specific detergent, unless the entire quantity of base gasoline is from the segregated fuel supply specified in the detergent's certification and the gasoline contains only those oxygenates or PRCs, if any, specified and approved in the detergent's certification.

(iii) If, pursuant to § 80.163(c)(3), the fuel-specific certification for the segregated pool of gasoline has established that no detergent additives are necessary for such gasoline to comply with this subpart, then the PTD must identify this gasoline as detergent-equivalent gasoline.

(b) *Use of product codes and other non-regulatory language*. (1) Product codes and other non-regulatory language may not be used as a substitute for the specified PTD warning language specified in paragraph (a)(6) of this section for base gasoline, except that:

(i) The specified warning language may be omitted for bulk transfers of base gasoline from a refinery to a pipeline if there is a prior written agreement between the parties specifying that all such gasoline is unadditized and will not be transferred to the ultimate consumer;

(ii) Product codes may be used as a substitute for the specified warning language provided that the PTD is an

electronic data interchange (EDI) document being used solely for the transfer of title to the base gasoline, and provided that the product codes otherwise comply with the requirements of this section.

(2) Product codes and other non-regulatory language may not be used in place of the PTD language specified in paragraph (a)(11) of this section regarding detergent package use restrictions.

(3) Product codes and other language not specified in this section may otherwise be used to comply with PTD information requirements, provided that they are clear, accurate, and not misleading.

(4) If product codes are used, they must be standardized throughout the distribution system in which they are used, and downstream parties must be informed of their full meaning.

(c) *PTD exemption for small transfers of additized gasoline.* Transfers of additized gasoline are exempt from the PTD requirements of this section provided all the following conditions are satisfied:

(1) The product is being transferred by a distributor who is not the product's detergent blender; and

(2) The recipient is a wholesale purchaser-consumer (WPC) or other ultimate consumer of gasoline, for its own use only or for that of its agents or employees; and

(3) The volume of additized gasoline being transferred is no greater than 550 gallons.

(d) *Recordkeeping Period.* Any person creating, providing or acquiring product transfer documentation for gasoline, detergent, or detergent-additized PRC shall retain the documents required by this section for a period of five years from the date the product transfer documentation was created, received or transferred, as applicable, and shall deliver such documents to EPA upon request. WPCs are not required to retain PTDs of additized gasoline received by them.

[61 FR 35379, July 5, 1996, as amended at 62 FR 60001, Nov. 6, 1997]

§ 80.172 Penalties.

(a) *General.* Any person who violates any prohibition or affirmative requirement of § 80.168 shall be liable to the United States for a civil penalty of not more than the sum of $25,000 for every day of such violation and the amount of economic benefit or savings resulting from the violation.

(b) *Gasoline non-conformity.* Any violation of § 80.168(a) shall constitute a separate day of violation for each and every day the gasoline in violation remains at any place in the gasoline distribution system, beginning on the day that the gasoline is in violation of the respective prohibition and ending on the last day that such gasoline is offered for sale or is dispensed to any ultimate consumer.

(c) *Detergent non-conformity.* Any violation of § 80.168(d) shall constitute a separate day of violation for each and every day the detergent in violation remains at any place in the gasoline or detergent distribution system, beginning on the day that the detergent is in violation of the prohibition and ending on the last day that detergent-additized gasoline, containing the subject detergent as a component thereof, is offered for sale or is dispensed to any ultimate consumer.

(d) *Post-refinery component non-conformity.* Any violation of § 80.168(e) shall constitute a separate day of violation for each and every day the PRC in violation remains at any place in the PRC or gasoline distribution system, beginning on the day that the PRC is in violation of the respective prohibition and ending on the last day that detergent-additized gasoline containing the PRC is offered for sale or is dispensed to any ultimate consumer.

(e) *Product transfer document non-conformity.* Any violation of § 80.168(c) shall constitute a separate day of violation for every day the PTD is not fully in compliance. This is to begin on the day that the PTD is created or should have been created and to end at the later of the following dates:

(1) The day that the document is corrected and comes into compliance; or

(2) The day that gasoline not additized in conformity with detergent certification program requirements, as a result of the PTD non-conformity, is offered for sale or is dispensed to the ultimate consumer.

(f) *Volumetric additive reconciliation recordkeeping non-conformity.* Any VAR

recordkeeping violation of § 80.168(b) shall constitute a separate day of violation for every day that VAR recordkeeping is not fully in compliance. Each element of the VAR record keeping program that is not in compliance shall constitute a separate violation for purposes of this section.

(g) *Volumetric additive reconciliation compliance standard non-conformity.* Any violation of the VAR compliance standard established in § 80.170 shall constitute a separate day of violation for each and every day of the VAR compliance period in which the standard was violated.

(h) *Volumetric additive reconciliation equipment calibration non-conformity.* Any VAR equipment calibration violation of § 80.168(b) shall constitute a separate day of violation for every day a VAR equipment calibration requirement is not met.

[61 FR 35380, July 5, 1996, as amended at 61 FR 58747, Nov. 18, 1996]

§ 80.173 Exemptions.

(a) *Research, development, and testing exemptions.* Any detergent that is either in a research, development, or test status, or is sold to petroleum, automobile, engine, or component manufacturers for research, development, or test purposes, or any gasoline to be used by, or under the control of, petroleum, additive, automobile, engine, or component manufacturers for research, development, or test purposes, is exempted from the provisions of the detergent certification program, provided that:

(1) The detergent (or fuel containing the detergent), or the gasoline, is kept segregated from non-exempt product, and the party possessing the product maintains documentation identifying the product as research, development, or testing detergent or fuel, as applicable, and stating that it is to be used only for research, development, or testing purposes; and

(2) The detergent (or fuel containing the detergent), or the gasoline, is not sold, dispensed, or transferred, or offered for sale, dispensing, or transfer, from a retail outlet. It shall also not be sold, dispensed, or transferred or offered for sale, dispensing, or transfer from a wholesale purchaser-consumer facility, unless such facility is associated with detergent, fuel, automotive, or engine research, development or testing; and

(3) The party using the product for research, development, or testing purposes, or the party sponsoring this usage, notifies the EPA, on at least an annual basis and prior to the use of the product, of the purpose(s) of the program(s) in which the product will be used and the anticipated volume of the product to be used. The information must be submitted to the address or fax number specified in § 80.174(c).

(b) *Racing fuel and aviation fuel exemptions.* Any fuel that is refined, sold, dispensed, transferred, or offered for sale, dispensing, or transfer as automotive racing fuel or as aircraft engine fuel, is exempted from the provisions of this subpart, provided that:

(1) The fuel is kept segregated from non-exempt fuel, and the party possessing the fuel for the purposes of refining, selling, dispensing, transferring, or offering for sale, dispensing, or transfer as automotive racing fuel or as aircraft engine fuel, maintains documentation identifying the product as racing fuel, restricted for non-highway use in racing motor vehicles, or as aviation fuel, restricted for use in aircraft, as applicable;

(2) Each pump stand at a regulated party's facility, from which such fuel is dispensed, is labeled with the applicable fuel identification and use restrictions described in paragraph (b)(1) of this section; and

(3) The fuel is not sold, dispensed, transferred, or offered for sale, dispensing, or transfer for highway use in a motor vehicle.

(c) *California gasoline exemptions.* (1) Gasoline or PRC which is additized in the State of California is exempt from the VAR provisions in §§ 80.168 (b) and (e) and 80.170, provided that:

(i) For all such gasoline or PRC, whether intended for sale within or outside of California, records of the type required for California gasoline (specified in title 13, California Code of Regulations, section 2257) are maintained; and

(ii) Such records, with the exception of daily additization records, are maintained for a period of five years from

the date they were created and are delivered to EPA upon request.

(2) Gasoline or PRC that is transferred and/or sold solely within the State of California is exempt from the PTD provisions of the detergent certification program, specified in §§ 80.168(c) and 80.171.

(3) Nothing in this paragraph (c) exempts such gasoline or PRC from the requirements of § 80.168 (a) and (e), as applicable. EPA will base its determination of California gasoline's conformity with the detergent's LAC on the additization records required by CARB, or records of the same type.

[61 FR 35380, July 5, 1996]

§ 80.174 Addresses.

(a) The detergent additive sample required under § 80.161(b)(2) shall be sent to: Manager, Fuels and Technical Analysis Group, Testing Services Division, U.S. Environmental Protection Agency, National Vehicle and Fuel Emissions Laboratory, 2565 Plymouth Road, Ann Arbor, Michigan 48105.

(b) Other detergent registration and certification data, and certain other information which may be specified in this subpart, shall be sent to: Detergent Additive Certification, Director, Fuels and Energy Division, U.S. Environmental Protection Agency (6406J), 1200 Pennsylvania Ave., NW., Washington, DC 20460.

(c) Notifications to EPA regarding program exemptions, detergent dilution and commingling, and certain other information which may be specified in this subpart, shall be sent to: Detergent Enforcement Program, U.S. Environmental Protection Agency, Suite 214, 12345 West Alameda Parkway, Denver, CO 80228, (FAX 303–969–6490).

[61 FR 35381, July 5, 1996]

Subpart H—Gasoline Sulfur

SOURCE: 65 FR 6823, Feb. 10, 2000, unless otherwise noted.

GENERAL INFORMATION

§§ 80.180–80.185 [Reserved]

§ 80.190 Who must register with EPA under the sulfur program?

(a) Refiners and importers who are registered by EPA under § 80.76 are deemed to be registered for purposes of this subpart.

(b) Refiners and importers subject to the standards in § 80.195 who are not registered by EPA under § 80.76 must provide to EPA the information required by § 80.76 by November 1, 2003, or not later than three months in advance of the first date that such person produces or imports gasoline, whichever is later.

(c) Refiners with any refinery subject to the small refiner standards under § 80.240, or refiners subject to the geographic phase-in area (GPA) standards under § 80.216, who are not registered by EPA under § 80.76 must provide to EPA the information required under § 80.76 by December 31, 2000.

(d) Any refiner who plans to generate credits or allotments under § 80.305 or § 80.275 in any year prior to 2004 who is not registered by EPA under § 80.76 must register under § 80.76 no later than September 30 of the year prior to the first year of credit generation. Any refiner who plans to generate credits in 2000 who is not registered by EPA under § 80.76 must register under § 80.76 no later than May 10, 2000.

GASOLINE SULFUR STANDARDS

§ 80.195 What are the gasoline sulfur standards for refiners and importers?

(a)(1) The gasoline sulfur standards for refiners and importers, excluding gasoline produced by small refiners subject to the standards at § 80.240, and gasoline designated as GPA gasoline under § 80.219(a), are as follows:

	Gasoline sulfur standards for the averaging period beginning:		
	January 1, 2004	January 1, 2005	January 1, 2006 and subsequent
Refinery or Importer Average	(1)	30.00	30.00
Corporate Pool Average	120.00	90.00	(1)
Per-Gallon Cap	300	300	80

[1] Not applicable.

(2) The sulfur standards and all compliance calculations for sulfur under this subpart are in parts per million (ppm) and volumes are in gallons.

(3) The averaging period is January 1 through December 31 of each year.

(4) The standards under this paragraph (a) for all imported gasoline shall be met by the importer.

(b)(1) The refinery or importer annual average gasoline sulfur standard is the maximum average sulfur level allowed for gasoline produced at a refinery or imported by an importer during each calendar year starting January 1, 2005.

(2) The annual average sulfur level is calculated in accordance with § 80.205.

(3) The refinery or importer annual average gasoline sulfur standard may be met using credits as provided under § 80.275 or § 80.315.

(4) In 2005 only, the refinery or importer annual average sulfur standard may be met using credits or allotments as provided under § 80.275 or credits as provided under § 80.315.

(c)(1) The corporate pool average gasoline sulfur standards applicable in 2004 and 2005 are the maximum average sulfur levels allowed for a refiner's or importer's gasoline production from all of the refiner's refineries or all gasoline imported by an importer in a calendar year. The corporate pool average standards for a party that is both a refiner and an importer are the maximum average sulfur levels allowed for all the party's combined gasoline production from all refineries and imported gasoline in a calendar year.

(2) The corporate pool average is calculated in accordance with the provisions of § 80.205.

(3) The corporate pool average standard may be met using sulfur allotments under § 80.275.

(4) The corporate pool average standards do not apply to approved small refiners subject to the small refiner gasoline sulfur standards under § 80.240.

(5)(i) Joint ventures, in which two or more parties collectively own and operate one or more refineries, will be treated as a separate refiner under this section.

(ii) One partner to a joint venture may include one or more joint venture refineries in its corporate pool for purposes of complying with the corporate pool average standards. The joint venture will be in compliance for such joint venture refinery(ies) if the partner's corporate pool average meets the corporate pool average standards. The joint venture entity must demonstrate compliance with the corporate pool average standards for any refinery(ies) owned by the joint venture that are not included in one partner's corporate pool.

(d)(1) The per-gallon cap standard is the maximum sulfur level allowed for each batch of gasoline produced or imported starting January 1, 2004.

(2) In 2004 only, a refiner or importer may produce or import gasoline with a per-gallon sulfur content greater than 300 ppm, to a maximum of 350 ppm, provided the following conditions are met:

(i) The refinery or importer becomes subject to an adjusted per-gallon cap standard in 2005, calculated using the following formula:

$$ACS = 300 - (S_{max} - 300)$$

Where:

ACS=Adjusted cap standard.

S_{max}=Maximum sulfur content of any gasoline produced at a refinery or imported by an importer during 2004.

(ii) The adjusted cap standard calculated under paragraph (d)(2)(i) of this section applies to all gasoline produced

at a refinery or imported by an importer during 2005.

(iii) The refinery or importer remains subject to the 30.00 average standard under paragraph (a) of this section for 2005.

(iv) The provisions of this paragraph (d)(2) apply to gasoline designated as GPA gasoline under § 80.219(a).

(v) The provisions of this paragraph (d)(2) do not apply to small refiners as defined in § 80.225.

[65 FR 6823, Feb. 10, 2000; 65 FR 10598, Feb. 28, 2000]

§ 80.200 What gasoline is subject to the sulfur standards and requirements?

For the purpose of this subpart, all reformulated and conventional gasoline and RBOB, collectively called ''gasoline'' unless otherwise specified, is subject to the standards and requirements under this subpart, with the following exceptions:

(a) Gasoline that is used to fuel aircraft, racing vehicles or racing boats that are used only in sanctioned racing events, provided that:

(1) Product transfer documents associated with such gasoline, and any pump stand from which such gasoline is dispensed, identify the gasoline either as gasoline that is restricted for use in aircraft, or as gasoline that is restricted for use in racing motor vehicles or racing boats that are used only in sanctioned racing events;

(2) The gasoline is completely segregated from all other gasoline throughout production, distribution and sale to the ultimate consumer; and

(3) The gasoline is not made available for use as motor vehicle gasoline, or dispensed for use in motor vehicles, except for motor vehicles used only in sanctioned racing events.

(b) California gasoline as defined in § 80.375.

(c) Gasoline that is exported for sale outside the U.S.

§ 80.205 How is the annual refinery or importer average and corporate pool average sulfur level determined?

(a) The annual refinery or importer average and corporate pool average gasoline sulfur level is calculated as follows:

$$S_a = \frac{\sum_{i=1}^{n}(V_i \times S_i)}{\sum_{i=1}^{n} V_i}$$

Where:

S_a=The refinery or importer annual average sulfur value, or corporate pool average sulfur value, as applicable.

V_i=The volume of gasoline produced or imported in batch i.

S_i=The sulfur content of batch i determined under § 80.330.

n=The number of batches of gasoline produced or imported during the averaging period.

i=Individual batch of gasoline produced or imported during the averaging period.

(b) All annual refinery or importer average or corporate pool average calculations shall be conducted to two decimal places.

(c) A refiner or importer may include oxygenate added downstream from the refinery or import facility when calculating the sulfur content, provided the following requirements are met:

(1) For oxygenate added to conventional gasoline, the refiner or importer must comply with the requirements of § 80.101(d)(4)(ii).

(2) For oxygenate added to RBOB, the refiner or importer must comply with the requirements of § 80.69(a).

(d) Refiners and importers must exclude from compliance calculations all of the following:

(1) Gasoline that was not produced at the refinery;

(2) In the case of an importer, gasoline that was imported as Certified Sulfur-FRGAS;

(3) Blending stocks transferred to others;

(4) Gasoline that has been included in the compliance calculations for another refinery or importer; and

(5) Gasoline exempted from standards under § 80.200.

(e)(1) A refiner or importer may exceed the refinery or importer annual average sulfur standard specified in § 80.195 for a given averaging period for any calendar year through 2010, creating a compliance deficit, provided

that in the calendar year following the year the standard is not met, the refinery or importer shall:

(i) Achieve compliance with the refinery or importer annual average sulfur standard specified in § 80.195; and

(ii) Use additional sulfur credits sufficient to offset the compliance deficit of the previous year.

(2) No refiner or importer may have a compliance deficit in any year after 2010. Any deficit that exists in 2010 must be made up in 2011.

(f) For refiners subject to the corporate pool average who produce some GPA gasoline, the refinery average sulfur value for its GPA gasoline shall be the average sulfur value after applying credits.

§ 80.210 What sulfur standards apply to gasoline downstream from refineries and importers?

The sulfur standard for gasoline at any point in the gasoline distribution system downstream from refineries and import facilities, including gasoline at facilities of distributors, carriers, oxygenate blenders, retailers and wholesale purchaser-consumers (''downstream location''), shall be determined in accordance with the provisions of this section.

(a) *Definition. S–RGAS* means gasoline that is subject to the standards under § 80.240 or § 80.270, including Certified Sulfur-FRGAS as defined in § 80.410, except that no batch of gasoline may be classified as S–RGAS if the actual sulfur content is less than the applicable per-gallon refinery cap standard specified in § 80.195.

(b) *Standards for gasoline that does not qualify for S–RGAS downstream standards.* The following standards apply to any gasoline that does not qualify for S–RGAS downstream standards under in paragraph (d) of this section:

(1) Starting February 1, 2004 the sulfur content of gasoline at any downstream location other than at a retail outlet or wholesale purchaser-consumer facility, and starting March 1, 2004 the sulfur content of gasoline at any downstream location, shall not exceed 378 ppm.

(2) Except as provided in § 80.220(a), starting February 1, 2005 the sulfur content of gasoline at any downstream location other than at a retail outlet or wholesale purchaser-consumer facility, and starting March 1, 2005 the sulfur content of gasoline at any downstream location, shall not exceed 326 ppm.

(3) Except as provided in § 80.220(a), starting February 1, 2006 the sulfur content of gasoline at any downstream location other than at a retail outlet or wholesale purchaser-consumer facility, and starting March 1, 2006 the sulfur content of gasoline at any downstream location, shall not exceed 95 ppm.

(c) *Standards for gasoline that qualifies for S–RGAS downstream standards.* In the case of any gasoline that qualifies for S–RGAS downstream standards under paragraph (d) of this section, the sulfur standard shall be the downstream standard for the gasoline calculated under paragraph (f) of this section. In the case of mixtures of gasoline that qualify for different S–RGAS downstream standards, the sulfur standard shall be the highest downstream standard applicable to any of the S–RGAS in the mixture.

(d) *Gasoline that qualifies for S–RGAS downstream standards.* Gasoline qualifies for S–RGAS downstream standards if all of the following conditions are met:

(1) The gasoline must be comprised in whole or part of S–RGAS.

(2) Product transfer documents applicable to the gasoline when received at that location must represent that the gasoline contains S–RGAS.

(3) Except as provided in paragraph (d)(4) of this section, the gasoline must have been sampled and tested at that location subsequent to the most recent receipt of gasoline at that location, and the test result must show a sulfur content greater than:

(i) 350 ppm starting February 1, 2004;

(ii) 300 ppm starting February 1, 2005; and

(iii) 80 ppm (or in the GPA, 300 ppm) starting February 1, 2006.

(4) This sampling and testing condition does not apply for gasoline at any retail outlet, wholesale purchaser-consumer facility, or contained in any transport truck.

(e) *Product transfer document information for S–RGAS.* (1) On each occasion

when any refiner or importer of S–RGAS transfers custody or title to such gasoline, the refiner or importer shall provide to the transferee documents that include the following information:

(i) Identification of the gasoline as being S–RGAS; and

(ii) The downstream standard applicable to the batch of gasoline under paragraph (f) of this section.

(2) Where gasoline in whole or part is classified as S–RGAS when received by the transferor, and where the gasoline transferred meets the conditions under paragraph (d) of this section, the transferor shall provide to the transferee, on each occasion when custody or title to gasoline is transferred, documents that include the following information:

(i) Identification of the gasoline as S–RGAS; and

(ii) The applicable downstream standard under paragraph (c) of this section. This does not apply when gasoline is sold or dispensed for use in motor vehicles at a retail outlet or wholesale purchaser-consumer facility.

(3) No person shall classify gasoline as being S–RGAS except as provided in paragraphs (e)(1) and (e)(2) of this section.

(4) Product codes may be used to convey the information required by paragraphs (e)(1) and (e)(2) of this section if such codes are clearly understood by each transferee.

(f) *Downstream standards applicable to S–RGAS when produced or imported.* (1) The downstream standard applicable to any gasoline classified as S–RGAS when produced or imported shall be calculated using the following equation:

$$D=S+105\times((S+2)/10^4)^{0.4}$$

Where:

D=Downstream sulfur standard.

S=The sulfur content of the refiner's batch determined under § 80.330.

(2) Where more than one S–RGAS batch is combined, prior to shipment, at the refinery or import facility where the S–RGAS is produced or imported, the downstream standard applicable to the mixture shall be the highest downstream standard, calculated under paragraph (f)(1) of this section, for any S–RGAS contained in the mixture.

§ 80.211 [Reserved]

§ 80.212 What requirements apply to oxygenate blenders?

Effective January 1, 2004, oxygenate blenders who blend oxygenate into gasoline downstream of the refinery that produced the gasoline or the import facility where the gasoline was imported, are not subject to the requirements of this subpart applicable to refiners for this gasoline, but are subject to the requirements and prohibitions applicable to downstream parties and the prohibition specified in § 80.385(e).

§§ 80.213–80.214 [Reserved]

GEOGRAPHIC PHASE-IN PROGRAM

§ 80.215 What is the scope of the geographic phase-in program?

(a) *Geographic phase-in area.* (1) The following states comprise the geographic phase-in area (GPA) subject to the provisions of the geographic phase-in program: North Dakota, Montana, Idaho, Wyoming, Utah, Colorado, New Mexico, and Alaska.

(2) In addition, the following counties within the states identified in paragraph (a)(2)(i) of this section and the following Federal Indian reservations in paragraph (a)(2)(ii) of this section are included in the GPA:

(i) The list of counties follows:

Arizona

Apache
Coconino
Gila
Greenlee
Navajo

Nebraska

Banner
Box Butte
Cheyenne
Dawes
Deuel
Garden
Keith
Kimball
Morrill
Scotts Bluff
Sheridan
Sioux

Nevada

Elko
Eureka
Humboldt
Lander
Lincoln
White Pine

Oregon

Baker
Crook
Gilliam
Grant
Harney
Malheur
Morrow
Sherman
Umatilla
Union
Wallowa
Wheeler

South Dakota

Bennett
Butte
Corson
Custer
Dewey
Fall River
Haakon
Harding
Jackson
Jones
Lawrence
Meade
Mellette
Pennington
Perkins
Shannon
Stanley
Todd
Ziebach

Washington

Adams
Asotin
Benton
Chelan
Columbia
Douglas
Ferry
Franklin
Garfield
Grant
Kittitas
Lincoln
Okanogan
Pend Oreille
Spokane
Stevens
Walla Walla
Whitman
Yakima

(ii) The list of Federal Indian reservations follows: Burns Paiute, Cheyenne River, Colville, Duck Valley, Ely Colony, Fort Apache, Fort McDermitt, Goshute, Haulapai, Havasupai, Hopi, Kalispel, Navajo, Pine Ridge, Rosebud, Yakama, San Carlos, Spokane, Standing Rock, Summit Lake, Te-Moak, Umatilla, Winnemucca.

(3) Contiguous tribal reservations of a particular tribe are included in the GPA if a portion of the tribal reservation is within the GPA state or county.

(4) Any dispensing facility located partially within a GPA county or tribal reservation land shall be considered fully within the GPA for purposes of this program.

(b) *Duration of the program.* (1) The geographic phase-in program applies to the 2004, 2005, and 2006 annual averaging periods, except as provided in paragraph (b)(2) of this section.

(2) Subject to the provisions of § 80.540, the geographic phase-in program shall also apply to the 2007 and 2008 annual averaging period for refiners approved for GPA standards in 2007 and 2008 under § 80.540.

(c) *Persons eligible.* Any refiner or importer who produces or imports gasoline for use in the geographic area under paragraph (a) of this section is eligible to apply for the geographic phase-in program. The provisions of the geographic phase-in program shall apply to imported gasoline through the importer.

[65 FR 6823, Feb. 10, 2000, as amended at 66 FR 5136, Jan. 18, 2001; 66 FR 19306, Apr. 13, 2001]

EFFECTIVE DATE NOTE: At 66 FR 19306, Apr. 13, 2001, § 80.215 was amended by revising paragraphs (a)(2) and (a)(3) and by adding paragraph (a)(4), effective July 12, 2001. For the convenience of the user, the superseded text is set forth as follows.

§ 80.215 What is the scope of the geographic phase-in program?

(a) * * *

(2) Additional counties or tribal lands in states adjacent to the states identified in paragraph (a) of this section will be included

in the GPA if any of the following criteria is met:

(i) Approximately 50% or more of the total volume of gasoline in the county or tribal land in 1999, as measured at the terminal(s) and bulk station(s) in the county or tribal land, was received from a refinery or refineries located in the area specified in paragraph (a)(1) of this section; or

(ii) Approximately 50% or more of the total volume of gasoline dispensed in the county or tribal land in 1999 was received from a refinery or refineries located in the area specified in paragraph (a)(1) of this section; or

(iii) Approximately 50% or more of the total commercial and private dispensing outlets in the county or tribal land in 1999 were supplied by gasoline produced by a refinery or refineries located in the area specified in paragraph (a)(1) of this section.

(3) The criteria of paragraphs (a)(2)(i), (ii) and (iii) of this section are without regard to the method of gasoline delivery (e.g, pipeline, truck, rail or barge). The criteria of paragraphs (a)(2)(ii) and (a)(2)(iii) of this section are without regard to whether the gasoline was transported directly from the refinery to the dispensing outlet or distributed through a terminal or bulk station.

* * * * *

§ 80.216 What standards apply to gasoline produced or imported for use in the GPA?

(a)(1) The refinery or importer annual average sulfur standard for gasoline produced or imported for use in the geographic area under § 80.215 shall be the lesser of:

(i) 150.00 ppm; or

(ii) The refinery's or importer's 1997/1998 average sulfur level, calculated in accordance with § 80.295, plus 30 ppm.

(2) In the case of any refinery whose actual annual sulfur average decreases to a level lower than the refinery's annual average sulfur standard established under paragraph (a)(1) of this section during the period 2000 through 2003, the standard applicable to that refinery from 2004 through 2006 shall be the lowest average sulfur content for any year in which the refinery generated allotments or credits under § 80.275(a) or § 80.305 plus 30 ppm, not to exceed 150.00 ppm.

(b) The per-gallon cap standard for gasoline produced or imported for use in the GPA under paragraph (a) of this section shall be 300 ppm, except as specified in § 80.195(d).

(c) The refinery or importer annual average sulfur level is calculated in accordance with the provisions of § 80.205.

(d) The refinery or importer annual average standard under paragraph (a) of this section may be met using sulfur allotments or credits as provided under §§ 80.275 and 80.315.

(e) Gasoline produced by approved small refiners subject to the standards under § 80.240 is not subject to the standards under paragraphs (a) and (b) of this section.

(f)(1) A refiner or importer whose gasoline production or volume of imported gasoline in 2004 or 2005 is comprised of ≥50% of gasoline designated as GPA gasoline under § 80.219 shall not be required to meet the corporate pool average standards under § 80.195 for its gasoline production or imported gasoline during the applicable averaging period.

(2) A refiner or importer whose gasoline production or volume of imported gasoline in 2004 or 2005 is comprised of less than 50% of gasoline designated as GPA gasoline under § 80.219 must meet the corporate pool average standards under § 80.195 for all the refiner's gasoline production or the importer's volume of imported gasoline during the applicable averaging period.

(g) The provisions for compliance deficits under § 80.205(e) do not apply to gasoline subject to the standards under paragraphs (a) and (b) of this section.

[38 FR 1255, Jan. 10, 1973, as amended at 66 FR 19306, Apr. 13, 2001]

EFFECTIVE DATE NOTE: At 66 FR 19306, Apr. 13, 2001, § 80.216 was amended by revising paragraphs (a)(1)(i) and (a)(2), effective July 12, 2001. For the convenience of the user, the superseded text is set forth as follows.

§ 80.216 What standards apply to gasoline produced or imported for use in the GPA?

(a)(1) * * *

(i) 150 ppm; or

* * * * *

(2) In the case of any refinery whose actual annual sulfur average decreases to a level lower than the refinery's annual average sulfur standard established under paragraph (a)(1) of this section during the period 2000 through 2003, the standard applicable to that refinery from 2004 through 2006 shall be the lowest average sulfur content for any year in which the refinery generated allotments or

credits under § 80.275(a) or § 80.305 plus 30 ppm, not to exceed 150 ppm.

* * * * *

§ 80.217 How does a refiner or importer apply for the GPA standards?

(a) To apply for the GPA standards under § 80.216, a refiner or importer must submit an application in accordance with the provisions of § 80.290.

(b) Applications under paragraph (a) of this section must be submitted by May 1, 2001.

(c)(1) If approved, EPA will notify the refiner or importer of each refinery's or the importer's annual average sulfur standard for gasoline produced for use in the GPA for the 2004 through 2006 annual averaging periods.

(2) If disapproved, the refiner or importer must comply with the standards in § 80.195 for gasoline produced for use in the GPA.

(d) If EPA finds that a refiner or importer provided false or inaccurate information on its application under this section, upon notice from EPA, the refiner's or importer's application will be void *ab initio*.

[38 FR 1255, Jan. 10, 1973, as amended at 66 FR 19306, Apr. 13, 2001]

EFFECTIVE DATE NOTE: At 66 FR 19306, Apr. 13, 2001, § 80.217 was amended by revising paragraph (b), effective July 12, 2001. For the convenience of the user, the superseded text is set forth as follows.

§ 80.217 How does a refiner or importer apply for the GPA standards?

* * * * *

(b) Applications under paragraph (a) of this section must be submitted by December 31, 2000.

* * * * *

§ 80.218 [Reserved]

§ 80.219 Designation and downstream requirements for GPA gasoline.

The requirements and prohibitions specified in this section apply during the period January 1, 2004 through December 31, 2006.

(a) *Designation*. Any refiner or importer shall designate any gasoline produced or imported that is subject to the standards under § 80.216 as ''GPA'' gasoline.

(b) *Product transfer documents*. (1) On each occasion that any person transfers custody or title to gasoline designated as GPA gasoline, other than when gasoline is sold or dispensed for use in motor vehicles at a retail outlet or wholesale purchaser-consumer facility, the transferor shall provide to the transferee documents that include the following information:

(i) Identification of the gasoline as being GPA gasoline;

(ii) A statement that the gasoline may not be distributed or sold for use outside the geographic phase-in area.

(2) Except for transfers to truck carriers, retailers and wholesale purchaser-consumers, product codes may be used to convey the information required by paragraph (b)(1) of this section if such codes are clearly understood by each transferee.

(3) The requirements under paragraph (b)(1) of this section are in addition to the requirement under § 80.210(e), where appropriate, to identify gasoline as being S–RGAS.

(c) *GPA gasoline use prohibitions*. (1) All parties in the distribution system, including refiners, importers, distributors, carriers, oxygenate blenders, retailers and wholesale purchaser-consumers, are prohibited from:

(i) Selling, offering for sale, dispensing, distributing, storing or transporting GPA gasoline for use outside the geographic phase-in area; and

(ii) Commingling GPA gasoline with gasoline not designated as GPA gasoline unless the mixture is classified as GPA gasoline.

(2) Gasoline not designated as GPA gasoline may be distributed or sold for use in the geographic phase-in area.

§ 80.220 What are the downstream standards for GPA gasoline?

(a) *GPA gasoline*. (1) During the period February 1, 2004 through January 31, 2005, the sulfur content of GPA gasoline at any downstream location other than at a retail outlet or wholesale purchaser-consumer facility, and during the period March 1, 2004 through February 28, 2005, the sulfur content of

GPA gasoline at any downstream location shall not exceed 378 ppm.

(2) During the period February 1, 2005 through January 31, 2007, the sulfur content of GPA gasoline at any downstream location other than at a retail outlet or wholesale purchaser-consumer facility, and during the period March 1, 2005 through February 28, 2007, the sulfur content of GPA gasoline at any downstream location shall not exceed 326 ppm.

(b) *GPA gasoline mixed with S–RGAS.* Notwithstanding the requirements in paragraph (a) of this section, the sulfur standard applicable to a mixture of GPA gasoline and S–RGAS gasoline at a downstream location shall be the greater of the standard under paragraph (a) of this section or the standard determined under § 80.210.

(c) Notwithstanding paragraph (a) of this section, the sulfur content standard of 326 ppm at any downstream location may be extended as provided under § 80.540(m).

[65 FR 6823, Feb. 10, 2000, as amended at 66 FR 5136, Jan. 18, 2001]

HARDSHIP PROVISIONS

§ 80.225 What is the definition of a small refiner?

(a) A *small refiner* is defined as any person, as defined by 42 U.S.C. 7602(e), who: (1)(i) Produces gasoline at a refinery by processing crude oil through refinery processing units;

(ii) Employed an average of no more than 1,500 people, based on the average number of employees for all pay periods from January 1, 1998, to January 1, 1999; and

(iii) Had an average crude capacity less than or equal to 155,000 barrels per calendar day (bpcd) for 1998.

(2) For the purpose of determining the number of employees and crude capacity under paragraph (a)(1) of this section, the refiner shall include the employees and crude capacity of any subsidiary companies, any parent company and subsidiaries of the parent company, and any joint venture partners.

(b) The definition under paragraph (a) of this section applies to domestic and foreign refiners. For any refiner owned by a governmental entity, the number of employees as specified in paragraph (a) of this section shall include all employees of the governmental entity.

(c) If, without merger with, or acquisition of, another business unit, a company with approved small refiner status under § 80.235 exceeds 1,500 employees, or a corporate crude capacity of 155,000 bpcd after January 1, 1999, it will be considered a small refiner for the duration of the small refiner program.

(d) Notwithstanding the definition in paragraph (a) of this section, refiners who acquire and/or reactivate a refinery that was shutdown or was non-operational between January 1, 1998, and January 1, 1999, may apply for small refiner status in accordance with the provisions of § 80.235. The employee (1500 annual average) and crude oil capacity criteria (155,000 bpcd) for small refiner status for such refineries will be determined in accordance with the provisions of § 80.235(f).

[38 FR 1255, Jan. 10, 1973, as amended at 66 FR 19306, Apr. 13, 2001]

EFFECTIVE DATE NOTE: At 66 FR 19306, Apr. 13, 2001, § 80.225 was amended by revising paragraph (d), effective July 12, 2001. For the convenience of the user, the superseded text is set forth as follows.

§ 80.225 What is the definition of a small refiner?

* * * * *

(d) Notwithstanding the definition in paragraph (a) of this section, refiners who acquire a refinery after January 1, 1999, or reactivate a refinery that was shutdown or was non-operational between January 1, 1998, and January 1, 1999, may apply for small refiner status in accordance with the provisions of § 80.235.

§ 80.230 Who is not eligible for the hardship provisions for small refiners?

(a) The following are not eligible for the hardship provisions for small refiners:

(1) Refiners with refineries built after January 1, 1999;

(2) Refiners who exceed the employee or crude oil capacity criteria under § 80.225(a) on January 1, 1999, but who meet these criteria after that date, regardless of whether the reduction in

employees or crude capacity is due to operational changes at the refinery or a company sale or reorganization;

(3) Importers; and

(4) Refiners who produce gasoline other than by processing crude oil through refinery processing units.

(b)(1) Refiners who qualify as small under § 80.225, and subsequently employ more than 1,500 people as a result of merger with or acquisition of or by another entity, are disqualified as small refiners. If this occurs the refiner shall notify EPA in writing no later than 20 days following this disqualifying event.

(2) Any refiner who qualifies as small under § 80.225 may elect to meet the standards under § 80.195 by notifying EPA in writing no later than November 15 prior to the year the change will occur.

(3) Any refiner whose status changes under paragraph (b)(1) or (2) of this section shall meet the standards under § 80.195 beginning with the first averaging period subsequent to the status change.

[38 FR 1255, Jan. 10, 1973, as amended at 66 FR 19307, Apr. 13, 2001]

EFFECTIVE DATE NOTE: At 66 FR 19307, Apr. 13, 2001, § 80.230 was amended by revising paragraph (a)(1), effective July 12, 2001. For the convenience of the user, the superseded text is set forth as follows.

§ 80.230 Who is not eligible for the hardship provisions for small refiners?

(a) * * *

(1) Refiners of refineries built after January 1, 1999;

* * * * *

§ 80.235 How does a refiner obtain approval as a small refiner?

(a) Applications for small refiner status must be submitted to EPA by December 31, 2000, except for applications submitted pursuant to § 80.225(d), which must be submitted by June 1, 2002.

(b) Applications for small refiner status must be sent to: U.S. EPA, Attn: Sulfur Program (6406J), 1200 Pennsylvania Ave., NW., Washington, DC 20460. For commercial delivery: U.S. EPA, Attn: Sulfur Program (6406J), 501 3rd Street, NW, Washington, DC 20001.

(c) The small refiner status application must contain the following information for the company seeking small refiner status, plus any subsidiary companies, any parent company and subsidiaries of the parent company, and any joint venture partners:

(1)(i) A listing of the name and address of each location where any employee worked during the 12 months preceding January 1, 1999; the average number of employees at each location based upon the number of employees for each pay period for the 12 months preceding January 1, 1999; and the type of business activities carried out at each location; or

(ii) In the case of a refiner who acquires a refinery after January 1, 1999, or reactivates a refinery that was shutdown between January 1, 1998, and January 1, 1999, a listing of the name and address of each location where any employee of the refiner worked since the refiner acquired or reactivated the refinery; the average number of employees at any such acquired or reactivated refinery during each calendar year since the refiner acquired or reactivated the refinery; and the type of business activities carried out at each location.

(2) The total corporate crude oil capacity of each refinery as reported to the Energy Information Administration (EIA) of the U.S. Department of Energy (DOE), or, in the case of a foreign refiner, a comparable reputable source, such as a professional publication or trade journal. The information submitted to EIA or the comparable reputable source is presumed to be correct. In cases where a company, domestic or foreign, disagrees with this information, the company may petition EPA with appropriate data to correct the record within 60 days after the company submits its application for small refiner status.

(3) A letter signed by the president, chief operating or chief executive officer of the company, or his/her designee, stating that the information contained in the application is true to the best of his/her knowledge.

(4) Name, address, phone number, facsimile number and E-mail address (if available) of a corporate contact person.

(d) For joint ventures, the total number of employees includes the combined

employee count of all corporate entities in the venture.

(e) For government-owned refiners, the total employee count includes all government employees.

(f) Approval of small refiner status for refiners who apply under § 80.225(d) will be based on all information submitted under paragraph (c) of this section. The information submitted must show that the refiner employed an average of no more than 1500 people and had an average crude oil capacity less than or equal to 155,000 bpcd. Where appropriate, the employee and crude oil capacity criteria for such refiners will be based on the most recent 12 months of operation.

(g) EPA will notify a refiner of approval or disapproval of small refiner status by letter.

(1) If approved, EPA will notify the refiner of each refinery's applicable annual average sulfur standard, baseline volume, and per-gallon cap standard under § 80.240 for the 2004–2007 averaging periods.

(2) If disapproved, the refiner must comply with the standards in § 80.195.

(h) If EPA finds that a refiner provided false or inaccurate information on its application for small refiner status, upon notice from EPA the refiner's small refiner status will be void ab initio.

(i) Upon notification to EPA, an approved small refiner may withdraw its status as a small refiner. Effective on January 1 of the year following such notification, the small refiner will become subject to the standards at § 80.195.

[38 FR 1255, Jan. 10, 1973, as amended at 66 FR 19307, Apr. 13, 2001]

EFFECTIVE DATE NOTE: At 66 FR 19307, Apr. 13, 2001, § 80.235 was amended by revising paragraphs (c)(2), (f), and (g)(1), effective July 12, 2001. For the convenience of the user, the superseded text is set forth as follows.

§ 80.235 How does a refiner obtain approval as a small refiner?

* * * * *

(c) * * *

(2) The total corporate crude capacity of each refinery as reported to the Energy Information Administration (EIA) of the U.S. Department of Energy (DOE). The information submitted to EIA is presumed to be correct. In cases where a company disagrees with this information, the company may petition EPA with appropriate data to correct the record within 60 days after the company submits its application for small refiner status.

* * * * *

(f) Approval of small refiner status for refiners who apply under § 80.225(d) will be based on all information submitted under paragraph (c) of this section. Where appropriate, the employee and crude oil capacity criteria for such refiners will be based on the most recent 12 months of operation.

(g) * * *

(1) If approved, EPA will notify the refiner of each refinery's applicable baseline standard and volume, and per-gallon cap under § 80.240.

* * * * *

§ 80.240 What are the small refiner gasoline sulfur standards?

(a) The gasoline sulfur standards for an approved small refiner are as follows:

Refinery baseline sulfur level	Temporary sulfur standards for small refiners applicable from January 1, 2004 through December 31, 2007	
	Annual average	Per gallon cap
0 to 30	30.00	300
31 to 200	Baseline level	300
201 to 400	200.00	300
401 to 600	50% of baseline	Factor of 1.5 times the average standard.
601 and above	300.00	450

(b) The refinery annual average sulfur standards must be met on an annual calendar year basis for each refinery owned by a small refiner. The refinery annual average sulfur level is calculated in accordance with the provisions of § 80.205.

(c)(1) The refinery annual average standards specified in paragraph (a) of this section apply to the volume of gasoline produced by a small refiner's refinery up to the lesser of:

(i) 105% of the baseline gasoline volume as determined under § 80.250(a)(1); or

(ii) The volume of gasoline produced at that refinery during the averaging period by processing crude oil.

(2) If a refiner exceeds the volume limitation in paragraph (c)(1) of this section during any averaging period, the annual average sulfur standard applicable to the refiner for that averaging period is calculated as follows:

$$S_{sr} = \frac{(V_b \times S_b) + (AF \times (V_a - V_b))}{V_a}$$

Where:

S_{sr}=Small refiner annual average sulfur standard.

V_b=Applicable volume under paragraph (c)(1) of this section.

V_a=Averaging period gasoline volume.

S_b=Small refiner sulfur baseline as determined under § 80.250.

AF=Adjustment factor (120 in 2004; 90 in 2005; and 30 in 2006 and thereafter).

(3) The small refiner average standards under paragraph (a) of this section may be met using sulfur allotments or credits as provided under § 80.275 or § 80.315.

(4) The provisions for compliance deficits under § 80.205(e) do not apply to small refiners subject to the standards under this section.

(d) In the case of any refiner with small refiner status who generates sulfur allotments or credits pursuant to § 80.275(a) or § 80.305, the baseline applicable to that refiner's refinery for purposes of establishing the standard for the refinery under paragraph (a) of this section beginning in 2004 shall be the lowest annual average sulfur content for any year during the period in which the refiner generated allotments or credits.

(e) Notwithstanding paragraph (a) of this section, the temporary sulfur standards for small refiners may be extended as provided under § 80.553.

[65 FR 6823, Feb. 10, 2000, as amended at 66 FR 5136, Jan. 18, 2001]

§ 80.245 How does a small refiner apply for a sulfur baseline?

(a) Any refiner seeking small refiner status must apply for a refinery sulfur baseline by the deadline under § 80.235 for each of the refiner's refineries by providing the following information:

(1) A sulfur baseline and baseline volume for every refinery calculated in accordance with § 80.250.

(2) The following information for each batch of gasoline produced in 1997–1998:

(i) Batch number assigned to the batch under § 80.65(d) or § 80.101(i);

(ii) Volume; and

(iii) Sulfur content.

(3) For any refiner that acquires and/or reactivates a refinery that was shut down or non-operational between January 1, 1997, and December 31, 1998, the average sulfur level and average volume of gasoline produced during each annual averaging period that the refinery was in operation after the refinery was acquired and/or reactivated. EPA will evaluate all of the information and data submitted by the refiner in determining the appropriate sulfur baseline for the refinery. Where EPA concludes that the data submitted reasonably reflects current sulfur levels, the refinery's baseline will be determined based on the average sulfur content of gasoline produced by the refinery during the most recent annual averaging period in which the refinery was in operation.

(b) The sulfur baseline application must be submitted to the address specified in § 80.235(b).

(c)(1) Foreign refiners who do not have an approved individual refinery baseline under § 80.94 must follow the procedures specified in § 80.410(b).

(2) Foreign refiners who have an approved individual refinery baseline under § 80.94, but one that was not in effect for purposes of anti-dumping compliance during the 1997–1998 annual

averaging periods, must comply with the requirements of this section for the gasoline produced at the refinery and imported into the United States during each of the annual averaging periods in which the refinery was subject to its individual anti-dumping baseline. EPA will evaluate all of the information and data submitted under this section in determining the foreign refinery's sulfur baseline pursuant to this paragraph. Where EPA concludes that the data submitted reasonably reflects current sulfur levels, the refinery's baseline will be determined based on the annual average sulfur level and volume of gasoline produced by the foreign refinery and imported into the U.S. during the most recent annual averaging period in which the refinery was subject to its individual anti-dumping baseline.

[38 FR 1255, Jan. 10, 1973, as amended at 66 FR 19307, April 13, 2001]

EFFECTIVE DATE NOTE: At 66 FR 19307, Apr. 13, 2001, § 80.245 was amended by revising paragraphs (a)(3) and by adding paragraph (c), effective July 12, 2001. For the convenience of the user, the superseded text is set forth as follows.

§ 80.245 How does a small refiner apply for a sulfur baseline?

(a) * * *

(3) For any refiner who acquires a refinery after January 1, 1999, or reactivates a refinery that was shut down or non-operational between January 1, 1998, and January 1, 1999, the average sulfur level and average volume of gasoline produced during each year the refinery was in operation after the refinery was acquired or reactivated. Where appropriate, the baseline sulfur level and volume for such refineries will be determined based on the annual average for the most recent year of operation.

* * * * *

§ 80.250 How is the small refiner sulfur baseline and volume determined?

(a)(1) The small refiner baseline volume is determined for each refinery as follows:

$$V_b = \frac{\sum_{i=1}^{n}(V_i)}{2}$$

Where:

V_B=Baseline volume.

V_I=Volume of gasoline batch i.

n = Total number of batches of gasoline produced from January 1, 1997, through December 31, 1998 (or the total number of batches of gasoline pursuant to § 80.245(a)(3); or, for a foreign refinery, the total number of batches of gasoline produced and imported into the U.S. from January 1, 1997, through December 31, 1998, or the total number of batches of gasoline produced and imported into the U.S. pursuant to § 80.245(c)(2)).

i = Individual batch of gasoline produced from January 1, 1997, through December 31, 1998 (or individual batch of gasoline pursuant to § 80.245(a)(3); or, for a foreign refinery, individual batch of gasoline produced and imported into the U.S. from January 1, 1997, through December 31, 1998, or individual batch of gasoline produced and imported into the U.S. pursuant to § 80.245(c)(2)).

(2) The small refiner sulfur baseline is determined for each refinery as follows:

$$S_b = \frac{\sum_{i=1}^{n}(V_i \times S_i)}{\sum_{i=1}^{n} V_i}$$

Where:

S_b=Small refiner sulfur baseline.

V_i=Volume of gasoline batch i.

S_i=Sulfur content of batch i.

n = Total number of batches of gasoline produced from January 1, 1997, through December 31, 1998 (or the total number of batches of gasoline pursuant to § 80.245(a)(3); or, for a foreign refinery, the total number of batches of gasoline produced and imported into the U.S. from January 1, 1997, through December 31, 1998, or the total number of batches of gasoline produced and imported into the U.S. pursuant to § 80.245(c)(2)).

i = Individual batch of gasoline produced from January 1, 1997, through December 31, 1998 (or individual batch of gasoline produced pursuant to § 80.245(a)(3); or, for a foreign refinery, individual batch of gasoline produced and imported into the U.S. from January 1, 1997, through December 31, 1998, or individual batch of gasoline produced and imported into the U.S. pursuant to § 80.245(c)(2)).

(3) Any refiner who, under § 80.69 or § 80.101(d)(4), included oxygenate blended downstream in compliance calculations for 1997–1998 must include this oxygenate in the baseline calculations for sulfur content under this section.

(4) Sulfur baseline calculations under this section shall be conducted to two decimal places.

(b) [Reserved]

(c) If at any time a small refinery baseline is determined to be incorrect, the corrected baseline applies ab initio and the annual average standards and cap standards are deemed to be those applicable under the corrected information.

[38 FR 1255, Jan. 10, 1973, as amended at 66 FR 19307, Apr. 13, 2001]

EFFECTIVE DATE NOTE: At 66 FR 19307, Apr. 13, 2001, § 80.250 was amended by revising the definitions of ''n'' and ''i'' following the equations in paragraphs (a)(1) and (a)(2), by adding paragraphs (a)(3) and (a)(4), and by removing and reserving paragraph (b), effective July 12, 2001. For the convenience of the user, the superseded text is set forth as follows.

§ 80.250 How is the small refiner sulfur baseline and volume determined?

(a) (1) * * *

n=Total number of batches of gasoline produced from January 1, 1997, through December 31, 1998.

i=Individual batch of gasoline produced from January 1, 1997, through December 31, 1998.

(2) * * *

n=Total number of batches of gasoline produced from January 1, 1997, through December 31, 1998.

i=Individual batch of gasoline produced from January 1, 1997, through December 31, 1998.

* * * * *

(b) Foreign refiners who do not have an approved refinery baseline under § 80.94 must follow the procedures specified in § 80.410(b).

* * * * *

§ 80.255 Compliance plans and demonstration of commitment to produce low sulfur gasoline.

The requirements of this section apply to any refiner approved for small refiner standards who wishes to be eligible for a hardship extension under § 80.260.

(a) *Compliance commitment.* By no later than June 1, 2004, any refiner who is approved for small refinery standards must submit a preliminary report to EPA which outlines the refiner's timeline for compliance and a project plan which discusses permits, capital commitments and engineering plans for making the necessary modifications to produce gasoline that meets the 30 ppm refinery average and 80 ppm per-gallon cap sulfur standards under § 80.195 on or before January 1, 2008. Documents showing activities and progress in these areas should be provided, if available.

(b) *Demonstration of Progress.* (1)(i) By no later than June 1, 2005, the small refiner must submit a report to EPA that states in detail the progress toward compliance with the 30 ppm refinery average and 80 ppm cap sulfur standards to date based on their timeline and project plan. The report must include:

(A) Copies of approved permits for construction of the equipment, or the permit application if approval is still pending;

(B) Copies of contracts for design and construction; and

(C) Any available evidence of having secured the necessary financing to complete the required construction;

(ii) If the refiner anticipates any difficulties in meeting its compliance commitments under this section, the refiner must submit a detailed report of all efforts made to date and the factors that may cause delay, including costs, specification of engineering or other design work needed and reasons for delay, specification of equipment needed and any reasons for delay, potential equipment suppliers and history of negotiations, and any other relevant information. If unavailability of equipment is a factor, the report must include a discussion of other options considered and the reasons these other options are not feasible.

(2) By no later than June 1, 2006, the small refiner must submit to EPA evidence that on-site construction has begun and that, absent unforeseen difficulties, the small refiner will be producing complying gasoline by January

1, 2008. If construction has not begun, the refiner must demonstrate that it has made all reasonable efforts to begin construction, that substantial progress is being made to begin construction as soon as possible, and that construction can be completed in time to begin production of gasoline that complies with the standards of § 80.195 by January 1, 2008.

(c) *Additional information*. The Administrator may request any additional information necessary to determine a refiner's commitment and/or progress toward meeting the standards in § 80.195 by 2008.

(d) *Failure to comply with requirements*. Any small refiner who fails to submit the progress reports required under this section will not be eligible for a hardship extension under § 80.260.

§ 80.260 What are the procedures and requirements for obtaining a hardship extension?

(a) An approved small refiner who has filed the reports specified in § 80.255 may apply to EPA for a hardship extension of the small refiner standards for calendar years 2008 and 2009. The application must be submitted in writing no later than January 1, 2007, to U.S. EPA, Attn: Sulfur Program (6406J), 1200 Pennsylvania Ave., NW., Washington, DC 20460. For commercial (non-postal) delivery: U.S. EPA, Attn: Sulfur Program, 501 3rd Street NW, Washington, DC 20001.

(b) The application must specify the factors that demonstrate a significant economic hardship and must provide a detailed discussion regarding the inability of the refinery to produce gasoline meeting the requirements of § 80.195. Such an application must include, at a minimum, the following information:

(1) Documentation of efforts made to obtain necessary financing, including:

(i) Copies of loan applications for the necessary financing of the construction of appropriate sulfur reduction technology and other equipment procurements or improvements; and

(ii) If financing has been disapproved or is otherwise unsuccessful, documents supporting the basis for that disapproval and evidence of efforts to pursue other means of financing;

(2) A detailed analysis of the reasons the refinery is unable to produce gasoline meeting the standards of § 80.195 in 2008, including costs, specification of equipment still needed, potential equipment suppliers, and efforts already completed to obtain the necessary equipment;

(3) If unavailability of equipment is part of the reason for the inability to comply, a discussion of other options considered, and the reasons these other options are not feasible;

(4) If relevant, a demonstration that a needed or lower cost technology is immediately unavailable, but will be available in the near future, and full information regarding when and from what sources it will be available;

(5) Schematic drawings of the refinery configuration as of January 1, 1999, and as of the date of the hardship extension application, and any planned future additions or changes;

(6) If relevant, a demonstration that a temporary unavailability exists of engineering or construction resources necessary for design or installation of the needed equipment;

(7) If sources of crude oil lower in sulfur than what the refiner is currently using are available, full information regarding the availability of these different crude sources, the sulfur content of those crude sources, the cost of the different crude sources over the past five years, and an estimate of gasoline sulfur levels achievable by the refinery if the lower sulfur crude sources were used;

(8) A discussion of any sulfur reductions that can be achieved from current levels;

(9) The date the refiner anticipates compliance with the standards in § 80.195 can be achieved at its refinery;

(10) An analysis of the economic impact of compliance on the refiner's business (including financial statements from the last 5 years, or for any time period up to 10 years, at EPA's request); and

(11) Any other information regarding other strategies considered, including strategies or components of strategies that do not involve installation of equipment, and why meeting the standards in § 80.195 beginning in 2008 is infeasible.

(c) The hardship extension application must contain a letter signed by the president or the chief operating or chief executive officer of the company, or his/her designee, stating that the information contained in the application is true to the best of his/her knowledge.

§ 80.265 How will the EPA approve or disapprove a hardship extension application?

(a) EPA will evaluate each application for hardship extension on a case-by-case basis. The factors considered for a hardship extension may include: The refiner's financial position and efforts to obtain capital funding; the refiner's efforts to procure necessary equipment, obtain design and engineering services and construction contractors; the availability of desulfurization equipment; and any other relevant factor. An extension will be granted for a refinery for the 2008 averaging period if the small refiner who owns the refinery adequately demonstrates that severe economic hardship would result if compliance with the standards in § 80.195 is required in 2008, or that compliance with the standard in 2008 is not feasible for reasons beyond the refiner's control, and that the refiner has made the best efforts possible to achieve compliance with the national standards by January 1, 2008. Upon reapplication by the refiner, if EPA determines that further relief is appropriate, EPA may grant a further extension through the 2009 averaging period. In no case will a further extension for the 2009 averaging period be granted unless the refiner demonstrates conclusively that it has financing in place and that it will be able to complete construction and meet the national gasoline sulfur standards no later than December 31, 2009.

(b) EPA may request more information, if necessary, for evaluation of the application. If requested information is not submitted within the time specified in EPA's request, or any extensions granted, the application may be denied.

(c) EPA will notify the refiner of approval or disapproval of hardship extension by letter.

(1) If approved, EPA will also notify the refiner of the date that full compliance with the standards specified at § 80.195 must be achieved or what interim sulfur levels or schedules apply, if any.

(2) If disapproved, beginning January 1, 2008, the refinery is subject to the requirements in § 80.195. Refiners who receive an extension for the 2008 averaging period shall meet the standards in § 80.195 beginning on January 1, 2009, unless EPA grants an extension of the hardship relief for an additional year. If such an additional extension is granted, the refiner shall meet the standards in § 80.195 on January 1, 2010.

(d) Refiners who receive a hardship extension may be required to meet more stringent standards than those which apply to them during 2007, and/or could be required to offset excess sulfur levels. EPA may impose reasonable conditions on an extension, such as requiring segregation of the small refiner's gasoline or requiring the gasoline to be sold for use in older vehicles only.

§ 80.270 Can a refiner seek temporary relief from the requirements of this subpart?

(a) EPA may permit a refiner to produce and distribute gasoline which does not meet the requirements of this subpart if the refiner demonstrates that:

(1) Unusual circumstances exist that impose extreme hardship and significantly affect ability to comply by the applicable date; and

(2) It has made best efforts to comply with the requirements of this subpart (including making efforts to obtain credits and/or allotments).

(b) Applications must be submitted to EPA by September 1, 2000. Relief may be granted from some or all of the requirements of this subpart, at EPA's discretion; however, EPA reserves the right to deny applications for appropriate reasons, including unacceptable environmental impact. Approval to distribute gasoline which does not meet the requirements of this subpart may be granted for such time period as EPA determines is appropriate, but shall not extend beyond January 1, 2008.

(c)(1) Applications must include a plan demonstrating how the refiner will comply with the requirements of

this subpart as expeditiously as possible. The plan shall include a showing that contracts are or will be in place for engineering and construction of desulfurization equipment, a plan for applying for and obtaining any permits necessary for construction, a description of plans to obtain necessary capital, and a detailed estimate of when the requirements of this subpart will be met.

(2) Applications must include a detailed description of the refinery configuration and operations, including, at a minimum, the following information:

(i) The portion of gasoline production that is produced using an FCC unit;

(ii) The refinery's hydrotreating capacity;

(iii) The refinery's total reformer unit throughput capacity;

(iv) The refinery's total crude capacity;

(v) Total crude capacity of any other refineries owned by the same entity;

(vi) Total volume of gasoline production at the refinery;

(vii) Total volume of other refinery products; and

(viii) Geographic location(s) in which gasoline will be sold.

(3) Applications must include, at a minimum, the following information:

(i) Detailed description of efforts to obtain capital for refinery investments;

(ii) Bond rating of entity that owns the refinery; and

(iii) Estimated capital investment needed to comply with the requirements of this subpart by the applicable date.

(4) Applicants must also provide any other relevant information requested by EPA.

(d) EPA may impose any reasonable conditions on waivers granted under this section.

ALLOTMENT TRADING PROGRAM

§ 80.275 How are allotments generated and used?

(a) *Generation of allotments and credits in 2003.* (1) During 2003 only, any domestic or foreign refiner may have the option to generate credits in accordance with the provisions of § 80.305 or generate allotments and credits under paragraph (a)(2) of this section.

(2) If the average sulfur content of the gasoline produced at a refinery is less than the refinery's baseline as determined under § 80.295 and is 60 ppm or less, allotments and credits may be generated using the following procedures. This paragraph (a) does not apply to importers.

(i) If the average sulfur content of the gasoline produced at a refinery is less than or equal to 30, and the refinery's sulfur baseline is greater than 120, the following procedures apply:

$SA_{TypeB} = (30 - Sa_a) \times V$

$SA_{TypeA} = (V \times 90) \times 0.8$

$CR = (S_{Base} - 120) \times V$

(ii) If the average sulfur content of the gasoline produced at a refinery is less than or equal to 30, and the refinery's sulfur baseline is greater than 30 but less than or equal to 120, the following procedures apply:

$SA_{TypeB} = (30 - S_a) \times V$

$SA_{TypeA} = ((S_{Base} - 30) \times V) \times 0.8$

(iii) If the average sulfur content of the gasoline produced at a refinery is less than or equal to 30, and the refinery's sulfur baseline is less than or equal to 30, the following procedures apply:

$SA_{TypeB} = (S_{Base} - S_a) \times V$

(iv) If the average sulfur content of the gasoline produced at a refinery is greater than 30, and the refinery's sulfur baseline is greater than 120, the following procedures apply:

$SA_{TypeA} = ((120 - S_a) \times V) \times 0.8$

$CR = (S_{Base} - 120) \times V$

(v) If the average sulfur content of the gasoline produced at a refinery is greater than 30, and the refinery's sulfur baseline is less than or equal to 120, the following procedures apply:

$SA_{TypeA} = ((S_{Base} - Sa) \times V) \times 0.8$

(vi) For purposes of the equations under paragraphs (a)(2)(i) through (v) of this section, the following definitions apply:

SA_{TypeB} = Type B sulfur allotments generated.

SA_{TypeA} = Type A sulfur allotments generated.

CR = Credits generated.

S_{Base} = Refinery's sulfur baseline value under § 80.295.

S_a = Average sulfur content of the gasoline produced at the refinery during 2003 (or for a foreign refinery, all gasoline produced during 2003 that was imported into the U.S.).

V = Volume of gasoline produced at the refinery during 2003 (or for a foreign refinery, all gasoline produced during 2003 that was imported into the U.S.).

(b) *Generation of allotments in 2004 and 2005.* During 2004 and 2005 only, refiners and importers that have corporate pool average sulfur levels below the corporate pool average standards under § 80.195 may generate sulfur allotments separately for each year using the following procedures.

(1) If the average sulfur content of the gasoline produced or imported is less than 30 the following procedures apply:

$$SA_{TypeB} = (30 - S_a) \times V_a$$
$$SA_{TypeA} = (S_{PS} - 30) \times V_a$$

(2) If the average sulfur content of the gasoline produced or imported is equal to or greater than 30 the following procedures apply:

$$SA_{TypeA} = (S_{PS} - S_a) \times V_a$$

(3) For purposes of the equations under paragraphs (b)(1) and (2) of this section, the following definitions apply:

SA_{TypeB} = Type B sulfur allotments generated.

SA_{TypeA} = Type A sulfur allotments generated.

S_a = Corporate pool average sulfur level for the year.

S_{PS} = Corporate pool average standard (120 in 2004; 90 in 2005).

V_a = Total volume of gasoline produced and/or imported during the year.

(c) *Use of sulfur allotments to meet standards.* (1) Refiners and importers may use Type A and Type B sulfur allotments to meet the corporate pool average standards under § 80.195, except that if allotments generated in 2003 or 2004 are used to meet the corporate pool standard in 2005 the allotments generated in 2003 or 2004 shall be reduced in value by 50%.

(2) Small refiners subject to the standards under § 80.240, and refiners and importers of gasoline designated as GPA gasoline under § 80.219(a), may use sulfur allotments to meet their annual average refinery or importer standards.

(d) *Transfers of sulfur allotments.* Sulfur allotments generated under this section may be transferred, provided that:

(1) No allotment may be transferred more than twice: The first transfer by the refiner or importer who generated the allotment may only be made to a refiner or importer who intends to use the allotment; if the transferee cannot use the allotment, it may make the second, and final, transfer only to a refiner or importer who intends to use the allotment. In no case may an allotment be transferred more than twice before being used or terminated.

(2) The allotment transferor must apply any allotments necessary to meet the transferor's corporate pool average standard before transferring allotments to any other refiner or importer or before converting allotments into credits.

(3) The transferor must supply to the transferee records indicating the year of generation and type of the allotments, the identity of the refiner or importer who generated the allotments, and the identity of the transferring party, if it is not the same part that generated the allotments.

(4) The transferor must inform the transferee whether any transferred allotments are Type A allotments or Type B allotments, as defined in paragraphs (a) and (b) of this section.

(5) In the case of allotments that have been calculated or created improperly, or are otherwise determined to be invalid, the following provisions apply:

(i) Invalid allotments cannot be used to achieve compliance with the transferee's corporate pool average standard or be converted to credits, regardless of the transferee's good faith belief that the allotments were valid.

(ii) The refiner or importer who used the allotments, and any transferor of the allotments, must adjust their allotment records and reports and sulfur calculations as necessary to reflect the proper allotments.

(iii) Any allotments remaining after correcting for the improperly created allotments must first be applied to correct the invalid transfers before the

transferor may transfer any other allotments or before converting allotments into credits.

(e) *Conversion of allotments into credits.* A refiner or importer may convert allotments into credits using the following procedures:

(1) Type A allotments may be converted into credits with the same requirements and limitations on use that apply under § 80.315 to credits generated in 2000 through 2003.

(2) Type B allotments may be converted into credits with the same requirements and limitations on use that apply under § 80.315 to credits generated in 2004 and later, based on the year of creation of the allotment.

(f) *Small refiners.* Small refiners subject to the standards under § 80.240 may not generate sulfur allotments under paragraph (b) of this section.

(g) *GPA gasoline.* GPA gasoline that is included in the refiner's or importer's corporate pool average under § 80.216(f)(2) must be included in the calculations under paragraph (b) of this section. No refiner or importer may generate allotments in 2004 or 2005 who is not required to meet the corporate pool average standards.

AVERAGING, BANKING AND TRADING (ABT) PROGRAM—GENERAL INFORMATION

§ 80.280 [Reserved]

§ 80.285 Who may generate credits under the ABT program?

(a) *Credit generation in 2000 through 2003.* (1) Credits may be generated in 2000 through 2003 under § 80.305 by refiners who produce gasoline from crude oil, and are:

(i) Refiners who establish a sulfur baseline under § 80.295 for a refinery;

(ii) Foreign refiners for refineries with an approved baseline under § 80.94, or refineries with baselines established in accordance with § 80.290(d); or

(iii) Small refiners for any refinery subject to the standards under § 80.240, using their small refiner baseline established under § 80.250 for that refinery.

(2) Importers and oxygenate blenders may not generate credits under § 80.305.

(b) *Credit generation beginning in 2004.* (1) Credits may be generated beginning in 2004 under § 80.310 by:

(i) Refiners for any refinery, and importers subject to the standards under § 80.195;

(ii) Refiners and importers of gasoline designated as GPA gasoline under § 80.219, using the refinery's annual average sulfur standard for GPA gasoline established under § 80.216(a)(for any party generating credits under both paragraph (b)(1)(i) of this section and this paragraph (b)(1)(ii), such credits must be calculated separately); or

(iii) Small refiners for any refinery subject to the standards under § 80.240, using refinery's standard established under § 80.240.

(2) Generation of credits under § 80.310 for all imported gasoline shall be through the importer.

(3) Oxygenate blenders may not generate credits under § 80.310.

[38 FR 1255, Jan. 10, 1973, as amended at 66 FR 19307, Apr. 13, 2001]

EFFECTIVE DATE NOTE: At 66 FR 19307, Apr. 13, 2001, § 80.285 was amended by revising paragraphs (a)(1)(i), (a)(1)(ii), (a)(1)(iii), (b)(1)(i), (b)(1)(ii) and (b)(2), effective July 12, 2001. For the convenience of the user, the superseded text is set forth as follows.

§ 80.285 Who may generate credits under the ABT program?

(a) * * *

(1) * * *

(i) Refiners who establish a sulfur baseline under § 80.295;

(ii) Foreign refiners with approved baselines under § 80.94, or baselines established in accordance with § 80.410; or

(iii) Small refiners for any refinery subject to the standards under § 80.240, using their small refiner baseline established under § 80.250.

* * * * *

(b) * * *

(1) * * *

(i) Refiners and importers subject to the standards under § 80.195;

(ii) Refiners and importers of gasoline designated as GPA gasoline under § 80.219, using the lesser of: 150 ppm; or the refiner's or importer's baseline calculated under § 80.295; or the refinery's lowest annual average sulfur content for any year from 2000 through 2003 during which the refiner generated credits (for any party generating credits under both paragraph (b)(1)(i) of this section and this

paragraph (b)(1)(ii), such credits must be calculated separately); or

* * * * *

(2) Generation of credits for all imported gasoline shall be through the importer.

* * * * *

§ 80.290 How does a refiner apply for a sulfur baseline?

(a) The refiner must submit an application to EPA which includes the information required under paragraph (c) of this section no later than September 30 of the year in which the refiner plans to begin generating credits, or the refiner or an importer plans to sell gasoline in the geographic phase-in area in accordance with § 80.217.

(b) The sulfur baseline request must be sent to: U.S. EPA, Attn: Sulfur Program (6406J), 1200 Pennsylvania Ave., NW Washington, DC 20460. For commercial (non-postal) delivery: U.S. EPA, Attn: Sulfur Program, 501 3rd Street NW., Washington, DC 20001.

(c) The sulfur baseline application must include the following information:

(1) A listing of the names and addresses of all refineries owned by the corporation for which the refiner is applying for a sulfur baseline.

(2) The annual average gasoline sulfur baseline for gasoline produced in 1997–1998, for each refinery for which the refiner is applying for a sulfur baseline, calculated in accordance with § 80.295.

(3) A letter signed by the president, chief operating or chief executive officer, of the company, or his/her delegate, stating that the information contained in the sulfur baseline determination is true to the best of his/her knowledge.

(4) Name, address, phone number, facsimile number and E-mail address of a corporate contact person.

(5) The following information for each batch of gasoline produced in 1997–1998:

(i) Batch number assigned to the batch under § 80.65(d) or § 80.101(i);

(ii) Volume; and

(iii) Sulfur content.

(6) For any refiner that acquires and/or reactivates a refinery that was shut down or non-operational between January 1, 1997, and December 31, 1998, the average sulfur level of gasoline produced during each annual averaging period that the refinery was in operation after the refinery was acquired and/or reactivated. EPA will evaluate all of the data submitted by the refiner in determining the appropriate sulfur baseline for the refinery. Where EPA concludes that the data submitted reasonably reflects current sulfur levels, the refinery's baseline will be determined based on the average sulfur content of the refinery's gasoline production during the most recent annual averaging period the refinery was in operation.

(d)(1) Foreign refiners who do not have an approved refinery baseline under § 80.94 must follow the procedures specified in § 80.410(b).

(2) Foreign refiners who have an approved individual refinery baseline under § 80.94, but one that was not in effect for purposes of anti-dumping compliance during the 1997–1998 annual averaging periods, must comply with the requirements of this section for the gasoline produced at the refinery and imported to the U.S. during each annual averaging period in which the refinery was subject to its individual anti-dumping baseline. EPA will evaluate all of the information and data submitted under this section in determining a foreign refinery's sulfur baseline pursuant to this paragraph (d). Where EPA concludes that the data submitted reasonably reflects current sulfur levels, a foreign refinery's baseline sulfur level under this paragraph will be determined based on the average sulfur level of gasoline produced by the foreign refinery and imported to the U.S. during the most recent annual averaging period in which the refinery was subject to its individual anti-dumping baseline.

(e) Within 60 days of receipt of an application under this section, EPA will notify the refiner of approval of the refinery's baseline or of any deficiencies in the application.

(f) If at any time the baseline submitted in accordance with the requirements of this section is determined to be incorrect, EPA will notify the refiner of the corrected baseline.

(g) Any refiner that seeks temporary relief under § 80.270 shall apply for a refinery sulfur baseline in accordance with the provisions of this section and § 80.295, and if applicable, § 80.410(b), no later than September 1, 2000.

[38 FR 1255, Jan. 10, 1973, as amended at 66 FR 19308, Apr. 13, 2001]

EFFECTIVE DATE NOTE: At 66 FR 19308, Apr. 13, 2001, § 80.290 was amended by adding paragraph (c)(6) and by revising paragraph (d), effective July 12, 2001. For the convenience of the user, the superseded text is set forth as follows.

§ 80.290 How does a refiner apply for a sulfur baseline?

* * * * *

(d) Foreign refiners who do not have an approved refinery baseline under § 80.94 must follow the procedures specified in § 80.410(b).

§ 80.295 How is a refinery sulfur baseline determined?

(a) A refinery's gasoline sulfur baseline for the purpose of generating credits during years 2000 through 2003 is calculated using the following equation:

$$S_{Base} = \frac{\sum_{i=1}^{n} (Vi \times Si)}{\sum_{i=1}^{n} Vi}$$

Where:

S_{Base}=Sulfur baseline value.

V_i=Volume of gasoline batch i.

S_i=Sulfur content of gasoline batch i.

n = Total number of batches of gasoline produced during January 1, 1997 through December 31, 1998 (or the total number of batches of gasoline pursuant to § 80.290(c)(6); or, for a foreign refinery, the total number of batches of gasoline produced and imported into the U.S. during January 1, 1997 through December 31, 1998, or, the total number of batches of gasoline produced and imported into the U.S. pursuant to § 80.290(d)(2)).

i = Individual batch of gasoline produced during January 1, 1997 through December 31, 1998 (or individual batch of gasoline produced pursuant to § 80.290(c)(6); or, for a foreign refinery, individual batch of gasoline produced and imported into the U.S. during January 1, 1997 through December 31, 1998, or, individual batch of gasoline produced and imported into the U.S. pursuant to § 80.290(d)(2)).

(b) Any refiner who, under § 80.65 or § 80.101(d)(4), included oxygenate blended downstream in compliance calculations for 1997–1998 must include this oxygenate in the baseline calculations for sulfur content under paragraph (a) of this section.

(c) Sulfur baseline calculations under this section shall be conducted to two decimal places.

[38 FR 1255, Jan. 10, 1973, as amended at 66 FR 19308, Apr. 13, 2001]

EFFECTIVE DATE NOTE: At 66 FR 19308, § 80.295 was amended by revising the definitions of ''n'' and ''i'' following the equation in paragraph (a), by revising paragraph (b) and by adding paragraph (c), effective July 12, 2001. For the convenience of the user, the superseded text is set forth as follows.

§ 80.295 How is a refinery sulfur baseline determined?

(a) * * *

n=Total number of batches of gasoline produced during January 1, 1997 through December 31, 1998.

i=Individual batch of gasoline produced during January 1, 1997 through December 31, 1998.

(b) Any refiner who, under § 80.65 or § 80.101(d)(4), included oxygenate blended downstream in compliance calculations for 1997–1998 must include this oxygenate in the baseline calculations for sulfur content under paragraph (a) of this section.

§ 80.300 [Reserved]

ABT PROGRAM—CREDIT GENERATION

§ 80.305 How are credits generated during the time period 2000 through 2003?

(a) Credits must be calculated as follows:

$$CR_a = V_a \times (S_{Base} - S_a)$$

Where:

CR_a=Credits generated for the averaging period.

V_a = Total volume of gasoline produced during the averaging period at the refinery (or for a foreign refinery, the total volume of gasoline produced during the averaging period at the refinery that was imported into the U.S. in accordance with the requirements of § 80.410)

S_{Base}=Sulfur baseline value for the refinery established under § 80.250 or § 80.295.

S_a = Actual annual average sulfur level, calculated in accordance with the provisions of § 80.205, for gasoline produced during the averaging period by the refinery, exclusive of any credits, (or for a foreign refinery, the actual average sulfur level, calculated in accordance with the provisions of § 80.205, for gasoline produced during the averaging period at the refinery that was imported into the U.S., in accordance with the requirements of § 80.410, exclusive of any credits.)

(b) The refiner may include any oxygenates included in its RFG or conventional gasoline volume under §§ 80.65 and 80.101(d)(4), respectively, for the purpose of generating credits.

(c) Credits under this program are in units of ''ppm-gallons''.

(d) Refiners may generate credits for gasoline produced during an averaging period for a refinery only if the annual average sulfur level for the gasoline produced at that refinery during the averaging period is less than 0.90 of the refinery's baseline under § 80.250 or § 80.295.

(e) Credits generated in accordance with paragraph (a) of this section must be identified by the year of creation.

[38 FR 1255, Jan. 10, 1973, as amended at 66 FR 19308, Apr. 13, 2001]

EFFECTIVE DATE NOTE: At 66 FR 19308, § 80.305 was amended by revising the definitions of ''V_a'' and ''S_a''following the equation in paragraph (a), and by revising paragraph (d), effective July 12, 2001. For the convenience of the user, the superseded text is set forth as follows.

§ 80.305 How are credits generated during the time period 2000 through 2003?

(a) * * *

V_a=Total volume of gasoline produced during the averaging period at the refinery.

* * * * *

S_a=Actual annual average sulfur level for gasoline produced during the averaging period by the refinery exclusive of any credits.

* * * * *

(d) Refiners may generate credits for gasoline produced during an averaging period only if the annual average sulfur level for the gasoline produced during the averaging period is less than 0.90 of the refiners baseline under § 80.250 or § 80.295.

* * * * *

§ 80.310 How are credits generated beginning in 2004?

(a) A refiner for any refinery, or an importer, may generate credits in 2004 and thereafter if the annual average sulfur level for gasoline produced or imported for the averaging period is less than the applicable refinery or importer annual average sulfur standard for that refinery or importer in that year.

(b) Credits are calculated as follows:

$$CR_a = V_a \times (S_{Std} - S_a)$$

Where:

CR_a=Credits generated for the averaging period.

V_a=Total annual volume gasoline produced at a refinery or imported during the averaging period.

S_{std} = 30 ppm; or the sulfur standard for a small refinery established under § 80.240; or, for gasoline designated as GPA gasoline under § 80.219, the standard for GPA gasoline established for a refinery under § 80.216(a).

S_a = Actual annual average sulfur level, calculated in accordance with the provisions of § 80.205, for gasoline produced at a refinery or imported during the averaging period, exclusive of any credits.

(c) Credits generated in accordance with this section must be identified by the year of creation.

[38 FR 1255, Jan. 10, 1973, as amended at 66 FR 19308, Apr. 13, 2001]

EFFECTIVE DATE NOTE: At 66 FR 19308, § 80.310 was amended by revising the definitions of S_{std} and S_a following the equation in paragraph (b), effective July 12, 2001. For the convenience of the user, the superseded text is set forth as follows.

§ 80.310 How are credits generated beginning in 2004?

* * * * *

(b) * * *

S_{std}=30 ppm; or the sulfur standard for a small refinery established under § 80.240; or, for gasoline designated as GPA gasoline under § 80.219, the lesser of 150 ppm,

the refinery's or importer's baseline calculated under § 80.295, or the refinery's lowest annual average sulfur content for any year from 2000 through 2003 during which the refinery generated credits or allotments.

S_a=Actual annual average sulfur level of gasoline produced at a refinery or imported during the averaging period exclusive of any credits.

* * * * *

ABT PROGRAM—CREDIT USE

§ 80.315 How are credits used and what are the limitations on credit use?

(a) *Credit use.* Credits may be used to meet the applicable refinery or importer annual average sulfur standards under § 80.195, § 80.216, or § 80.240, provided that:

(1) Sulfur credits used were generated pursuant to the requirements of this subpart; and

(2) The requirements of paragraphs (b) and (c) of this section are met.

(b) *Credit transfers.* (1) Credits obtained from other persons may be used to meet the annual average standards specified in § 80.195, § 80.216, or § 80.240 if all the following conditions are met:

(i) The credits are generated and reported according to the requirements of this subpart.

(ii) The credits are used in compliance with the limitations regarding the appropriate periods for credit use in this subpart.

(iii) Any credit transfer takes place no later than the last day of February following the calendar year averaging period when the credits are used.

(iv) No credit may be transferred more than twice: The first transfer by the refiner or importer who generated the credit may only be made to a refiner or importer who intends to use the credit; if the transferee cannot use the credit, it may make the second, and final, transfer only to a refiner or importer who intends to use the credit. In no case may a credit be transferred more than twice before being used or terminated.

(v) The credit transferor must apply any credits necessary to meet the transferor's applicable average standard before transferring credits to any other refiner or importer.

(vi) No credits may be transferred that would result in the transferor having a negative credit balance.

(vii) Each transferor must supply to the transferee records indicating the years the credits were generated, the identity of the refiner or importer who generated the credits, and the identity of the transferring party, if it is not the same party that generated the credits.

(2) In the case of credits that have been calculated or created improperly, or are otherwise determined to be invalid, the following provisions apply:

(i) Where a refiner's baseline has been determined to be incorrect under § 80.250(c) or § 80.290(f), any credits generated, banked, used or traded must be adjusted to reflect the corrected baseline.

(ii) Invalid credits cannot be used to achieve compliance with the transferee's averaging standard, regardless of the transferee's good faith belief that the credits were valid.

(iii) The refiner or importer who used the credits, and any transferor of the credits, must adjust their credit records and reports and sulfur calculations as necessary to reflect the proper credits.

(iv) Any properly created credits existing in the transferor's credit balance after correcting the credit balance, and after the transferor applies credits as needed to meet the average standard at the end of the compliance year, must first be applied to correct the invalid transfers before the transferor trades or banks the credits.

(c) *Limitations on credit use.* (1) Credits generated prior to 2004 may only be used for demonstrating compliance with the refinery or importer annual average standards under § 80.195 during the 2005 and 2006 averaging periods. Such credits may be used to demonstrate compliance with the standards under § 80.216 during the 2004 through 2006 averaging periods, and with the standards under § 80.240 during the 2004 through 2007 averaging periods, and the 2008 and 2009 averaging periods, if allowed under the terms of a hardship extension under § 80.265.

(2) Credits generated in 2004 or later may only be used for demonstrating compliance with standards during an averaging period within five years of the year of generation.

(3) A refiner or importer possessing credits must use all credits prior to falling into compliance deficit under § 80.205(e).

(4) Credits may not be used to meet corporate pool average standards under § 80.195.

§ 80.320 [Reserved]

§ 80.325 [Reserved]

SAMPLING, TESTING AND RETENTION REQUIREMENTS FOR REFINERS AND IMPORTERS

§ 80.330 What are the sampling and testing requirements for refiners and importers?

(a) *Sample and test each batch of gasoline.* (1) Refiners and importers shall collect a representative sample from each batch of gasoline produced or imported and test each sample to determine its sulfur content for compliance with requirements under this subpart prior to the gasoline leaving the refinery or import facility, using the sampling and testing methods provided in this section.

(2) Except as provided in paragraph (a)(3) of this section, the requirements of this section apply beginning January 1, 2004, or January 1 of the first year of allotment or credit generation under § 80.275 or § 80.305, whichever is earlier.

(3) Prior to January 1, 2004:

(i) Any refiner may release gasoline from the refinery prior to obtaining the test results required under paragraph (a)(1) of this section.

(ii) Any refiner of conventional gasoline may combine samples of gasoline from more than one batch of gasoline or blendstock prior to analysis and treat such composite sample as one batch of gasoline or blendstock pursuant to the requirements of § 80.101(i)(2).

(4)(i) Beginning January 1, 2004, any refiner who produces gasoline using computer-controlled in-line blending equipment is exempt from the requirement of paragraph (a)(1) of this section to obtain the test results required under paragraph (a)(1) of this section prior to the gasoline leaving the refinery, provided that the refiner obtains an exemption from this requirement from EPA. To obtain such exemption, the refiner must:

(A) Have been granted an in-line blending exemption under § 80.65(f)(4); or

(B) If the refiner has not been granted an exemption under § 80.65(f)(4), submit to EPA all of the information required under § 80.65(f)(4)(i)(A). A letter signed by the president, chief operating or chief executive officer of the company, or his/her designee, stating that the information contained in the submission is true to the best of his/her belief must accompany any submission under this paragraph (a)(4)(i)(B).

(ii) Refiners who seek an exemption under paragraph (a)(4)(i) of this section must comply with any request by EPA for additional information or any other requirements that EPA includes as part of the exemption.

(iii) Within 60 days of EPA's receipt of a submission under paragraph (a)(4)(i)(B) of this section, EPA will notify the refiner if the exemption is not approved or of any deficiencies in the refiner's submission, or if any additional information is required or other requirements are included in the exemption pursuant to paragraph (a)(4)(ii) of this section. In the absence of such notification from EPA, the effective date of an exemption under paragraph (a)(4)(i) of this section for refiners who do not hold an exemption under § 80.65(f)(4) is 60 days from EPA's receipt of the refiner's submission under paragraph (a)(4)(i)(B) of this section.

(iv) EPA reserves the right to modify the requirements of an exemption under paragraph (a)(4)(i) of this section, in whole or in part, at any time, if EPA determines that the refiner's operation does not effectively or adequately control, monitor or document the sulfur content of the refinery's gasoline production, or if EPA determines that any other circumstances exist which merit modification of the requirements of an exemption, such as advancements in the state of the art for in-line blending measurement which allow for additional control or

more accurate monitoring or documentation of sulfur content. If EPA finds that a refiner provided false or inaccurate information in any submission required for an exemption under this section, upon notification from EPA, the refiner's exemption will be void ab initio.

(b) *Sampling methods.* For purposes of paragraph (a) of this section, refiners and importers shall sample each batch of gasoline by using one of the following methods:

(1) Manual sampling of tanks and pipelines shall be performed according to the applicable procedures specified in one of the two following methods:

(i) American Society for Testing and Materials (ASTM) method D 4057–95, entitled ''Standard Practice for Manual Sampling of Petroleum and Petroleum Products.''

(ii) Samples collected under the applicable procedures in ASTM method D 5842–95, entitled ''Standard Practice for Sampling and Handling of Fuels for Volatility Measurement,'' may be used for measuring sulfur content if there is no contamination present that could affect the sulfur test result.

(2) Automatic sampling of petroleum products in pipelines shall be performed according to the applicable procedures specified in ASTM method D 4177–95, entitled ''Standard Practice for Automatic Sampling of Petroleum and Petroleum Products.''

(c) *Test method for measuring the sulfur content of gasoline.* (1) For purposes of paragraph (a) of this section, refiners and importers shall use the method provided in § 80.46(a)(1) to measure the sulfur content of gasoline they produce or import.

(2) Except as provided in § 80.350 and in paragraph (c)(1) of this section, any ASTM sulfur test method for liquefied fuels may be used for quality assurance testing under § 80.400, or to determine whether gasoline qualifies for a S–RGAS downstream standard, if the protocols of the ASTM method are followed and the alternative method is correlated to the method provided in § 80.46(a)(1).

(d) *Test method for sulfur in butane.* (1) Refiners and importers shall use the method provided in § 80.46(a)(2) to measure the sulfur content of butane when the butane constitutes a batch of gasoline.

(2) Except as provided in paragraph (d)(1) of this section, any ASTM sulfur test method for gaseous fuels may be used for quality assurance testing under §§ 80.340(b)(4) and 80.400, if the protocols of the ASTM method are followed and the alternative method is correlated to the method provided in § 80.46(a)(2).

(e) *Incorporations by reference.* ASTM standard practices D 4057–95, D 4177–95 and D 5842–95 are incorporated by reference. These incorporations by reference were approved by the Director of the Federal Register in accordance with 5 U.S.C. 552(a) and 1 CFR part 51. Copies may be obtained from the American Society for Testing and Materials, 100 Barr Harbor Dr., West Conshohocken, PA 19428. Copies may be inspected at the Air Docket Section (LE–131), room M–1500, U.S. Environmental Protection Agency, Docket No. A–97–03, 1200 Pennsylvania Ave., NW., Washington, DC 20460, or at the Office of the Federal Register, 800 North Capitol Street, NW., Suite 700, Washington, DC.

[38 FR 1255, Jan. 10, 1973, as amended at 66 FR 19309, Apr. 13, 2001]

EFFECTIVE DATE NOTE: At 66 FR 19308, § 80.330 was amended by revising paragraphs (a)(3) and (a)(4), effective July 12, 2001. For the convenience of the user, the superseded text is set forth as follows.

§ 80.330 What are the sampling and testing requirements for refiners and importers?

(a) * * *

(3) Prior to January 1, 2004, for purposes of meeting the sampling and testing requirements of this section for conventional gasoline, any refiner may, prior to analysis, combine samples of gasoline from more than one batch of gasoline or blendstock and treat such composite sample as one batch of gasoline or blendstock pursuant to the requirements of § 80.101(i)(2).

(4) Any refiner who produces reformulated gasoline or conventional gasoline using computer-controlled in-line blending equipment may meet the testing requirement of paragraph (a)(1) of this section under the terms of an exemption granted under § 80.65(f)(4).

* * * * *

§ 80.335 What gasoline sample retention requirements apply to refiners and importers?

(a) *Sample retention requirements.* Beginning January 1, 2004, or January 1 of the first year allotments or credits are generated under §§ 80.275 and 80.305, whichever is earlier, any refiner or importer shall:

(1) Collect a representative portion of each sample analyzed under § 80.330(a), of at least 330 ml in volume;

(2) Retain sample portions for the most recent 20 samples collected, or for each sample collected during the most recent 21 day period, whichever is greater, not to exceed 90 days for any given sample;

(3) Comply with the gasoline sample handling and storage procedures under § 80.330(b) for each sample portion retained; and

(4) Comply with any request by EPA to:

(i) Provide a retained sample portion to the Administrator's authorized representative; and

(ii) Ship a retained sample portion to EPA, within 2 working days of the date of the request, by an overnight shipping service or comparable means, to the address and following procedures specified by EPA, and accompanied with the sulfur test result for the sample determined under § 80.330(a).

(b) *Sample retention requirement for samples subject to independent analysis requirements.* (1) Any refiner or importer who meets the independent analysis requirements under § 80.65(f) for any batch of reformulated gasoline or RBOB will have met the requirements of paragraph (a) of this section, provided the independent laboratory meets the requirements of paragraph (a) of this section for the gasoline batch.

(2) For samples retained by an independent laboratory under paragraph (b) of this section, the test results required to be submitted under paragraph (a) of this section shall be the test results determined under § 80.65(e).

(c) *Sampling compliance certification.* Any refiner or importer shall include with each annual report filed under § 80.370, the following statement, which must accurately reflect the facts and must be signed and dated by the same person who signs the annual report:

> I certify that I have made inquiries that are sufficient to give me knowledge of the procedures to collect and store gasoline samples, and I further certify that the procedures meet the requirements of the ASTM procedures required under 40 CFR 80.330.

(d) Prior to January 1, 2004, for purposes of complying with the requirements of this section, refiners who analyze composited samples under § 80.330(a)(3) must retain portions of the composited samples. Portions of samples of each batch comprising the composited samples are not required to be retained.

(e) For purposes of complying with the requirements of this section for RBOB, a sample of each RBOB batch produced plus a sample of the ethanol used to conduct the handblend testing pursuant to § 80.69 must be retained.

[38 FR 1255, Jan. 10, 2001, as amended at 66 FR 19309, Apr. 13, 2001]

EFFECTIVE DATE NOTE: At 66 FR 19309, § 80.335 was amended by revising paragraph (a)(2) and by adding paragraphs (d) and (e), effective July 12, 2001. For the convenience of the user, the superseded text is set forth as follows.

§ 80.335 What gasoline sample retention requirements apply to refiners and importers?

(a) * * *

(2) Retain sample portions for the most recent 20 samples collected, or for each sample collected during the most recent 21 day period, whichever is greater;

* * * * *

§ 80.340 What standards and requirements apply to refiners producing gasoline by blending blendstocks into previously certified gasoline (PCG)?

(a) Any refiner who produces gasoline by blending blendstock into PCG must meet the requirements of § 80.330 to sample and test every batch of gasoline as follows:

(1)(i) Sample and test to determine the volume and sulfur content of the PCG prior to blendstock blending.

(ii) Sample and test to determine the volume and sulfur content of the gasoline subsequent to blendstock blending.

(iii) Calculate the volume and sulfur content of the blendstock, by subtracting the volume and sulfur content of the PCG from the volume and sulfur content of the gasoline subsequent to blendstock blending. The blendstock is a batch for purposes of compliance calculations and reporting. For purposes of this paragraph (a), compliance with the applicable cap standard under § 80.195(a) shall be determined based on the sulfur content of the gasoline subsequent to blendstock blending.

(2) In the alternative, a refiner may sample and test each batch of blendstock when received at the refinery to determine the volume and sulfur content, and treat each blendstock receipt as a separate batch for purposes of compliance calculations for the annual average sulfur standard and for reporting. This alternative applies only if every batch of blendstock used at a refinery during an averaging period has a sulfur content that is equal to, or less than, the applicable per-gallon cap standard under §§ 80.195 or 80.216.

(b) Refiners who blend only butane into PCG may meet the sampling and testing requirements by using sulfur test results of the butane supplier, provided that the following requirements are also met:

(1) The sulfur content of the butane received from the butane supplier must not exceed the following sulfur standards on a per-gallon basis as follows:

(i) 120 ppm in 2004, and 30 ppm for 2005 and any subsequent year;

(ii) Except that the per-gallon sulfur content of butane blended to PCG that is designated as GPA gasoline shall not exceed 150 ppm from January 1, 2004, through December 31, 2006.

(2) The refiner obtains test results from the butane supplier that demonstrate that the sulfur content of each load of butane supplied does not exceed the applicable per-gallon sulfur standard under paragraph (b)(1) of this section through test results of samples of the butane contained in the storage tank from which the butane blender is supplied.

(i) Testing for the sulfur content of the butane by the supplier must be subsequent to each receipt of butane into the supplier's storage tank, or the testing must be immediately before transfer of butane to the butane blender.

(ii) The testing must be performed by the method specified in § 80.46(a)(2).

(iii) The butane blender must obtain a copy of the butane supplier's test results, at the time of each transfer of butane to the butane blender, that reflect the sulfur content of each load of butane supplied to the butane blender.

(3) The sulfur content and volume of each batch of gasoline produced is that of the butane the refiner blends into gasoline for purposes of calculating compliance with the standards in §§ 80.195 and 80.216.

(4) The refiner must conduct a quality assurance program of sampling and testing for each butane supplier that demonstrates the butane sulfur content does not exceed the applicable per-gallon sulfur standard in paragraph (b)(1) of this section. The frequency of butane sampling and testing, for each butane supplier, must be one sample for every 500,000 gallons of butane received, or one sample every 3 months, whichever results in more frequent sampling.

(5) If any of the requirements of this section are not met, in whole or in part, for any butane blended into gasoline, that butane is deemed in violation of the gasoline sulfur standards in § 80.195 or § 80.216, as applicable.

§ 80.345 [Reserved]

§ 80.350 What alternative sulfur standards and requirements apply to importers who transport gasoline by truck?

Importers who import gasoline into the United States by truck may comply with the following requirements instead of the requirements to sample and test every batch of gasoline under § 80.330, and the annual sulfur average and per-gallon cap standards otherwise applicable to importers under §§ 80.195 and 80.216:

(a) *Alternative standards.* The imported gasoline must comply with the standards in paragraph (a)(1) or (a)(2) of this section as follows:

(1) The applicable average standards, corporate average standards and per-gallon standards under § 80.195(a)(1), except that imported gasoline designated for use in the geographic phase-in area

from January 1, 2004, through December 31, 2006 must comply with an average standard of 150 ppm and a per-gallon standard of 300 ppm; or

(2) In 2004, a per-gallon standard of 120 ppm, and in 2005 and subsequent years a per-gallon standard of 30 ppm, except that imported gasoline designated for use in the geographic phase-in area from January 1, 2004, through December 31, 2006 must comply with a per-gallon standard of 150 ppm.

(b) *Terminal testing*. The importer may use test results for sulfur content testing conducted by the terminal operator, for gasoline contained in the storage tank from which trucks used to transport gasoline into the United States are loaded, for purposes of demonstrating compliance with the standards in paragraph (a) of this section, provided the following conditions are met:

(1) The sampling and testing shall be performed after each receipt of gasoline into the storage tank, or immediately before each transfer of gasoline to the importer's truck.

(2) The sampling and testing shall be performed using the methods specified in § 80.330(b) and 80.46(a)(1), respectively.

(3) At the time of each transfer of gasoline to the importer's truck for import to the U.S., the importer must obtain a copy of the terminal test result that indicates the sulfur content of the truck load.

(c) *Quality assurance program*. The importer must conduct a quality assurance program, as specified in this paragraph, for each truck loading terminal.

(1) Quality assurance samples must be obtained from the truck-loading terminal and tested by the importer, or by an independent laboratory, and the terminal operator must not know in advance when samples are to be collected.

(2) The sampling and testing must be performed using the methods specified in §§ 80.330(b) and 80.46(a)(1), respectively.

(3) The quality assurance test results for sulfur must differ from the terminal test result by no more than the ASTM reproducibility of the terminal's test results, as determined by the following equation:

$$R = 105 \times ((S+2)/10^4)^{0.4}$$

Where:

R = ASTM reproducibility.

S = Sulfur content based on the terminal's test result.

(4) The frequency of the quality assurance sampling and testing must be at least one sample for each fifty of an importer's trucks that are loaded at a terminal, or one sample per month, whichever is more frequent.

(d) *Party required to conduct quality assurance testing*. The quality assurance program under paragraph (c) of this section shall be conducted by the importer. In the alternative, this testing may be conducted by an independent laboratory that meets the criteria under § 80.65(f)(2)(iii), provided the importer receives, no later than 21 days after the sample was taken, copies of all results of tests conducted.

(e) *Assignment of batch numbers*. The importer must treat each truck load of imported gasoline as a separate batch for purposes of assigning batch numbers and maintaining records under § 80.365, and reporting under § 80.370.

(f) *EPA inspections of terminals*. EPA inspectors or auditors, and auditors conducting attest engagements under § 80.415, must be given full and immediate access to the truck-loading terminal and any laboratory at which samples of gasoline collected at the terminal are analyzed, and must be allowed to conduct inspections, review records, collect gasoline samples, and perform audits. These inspections or audits may be either announced or unannounced.

(g) *Certified Sulfur-FRGAS*. This section does not apply to Certified Sulfur-FRGAS.

(h) *Reporting requirements*. Any importer who elects to comply with the alternative standards in paragraph (a) of this section shall comply with the following requirements:

(1) All importer recordkeeping and reporting requirements under §§ 80.365 and 80.370, except as provided in paragraph (h)(2) of this section.

(2) An importer who elects to comply with the alternative standards in paragraph (a)(2) of this section must certify in the annual report whether it is in

compliance with the applicable per-gallon batch standard set forth in paragraph (a)(2) of this section, in lieu of providing the information required by § 80.370(a) regarding annual average sulfur content and compliance with the average standard under § 80.195.

(i) *Effect of noncompliance.* If any of the requirements of this section are not met, all gasoline imported by the truck importer during the time any requirements are not met is deemed in violation of the gasoline sulfur average and per-gallon cap standards in § 80.195 or § 80.216, as applicable. Additionally, if any requirement is not met, EPA may notify the importer of the violation and, if the requirement is not fulfilled within 10 days of notification, the truck importer may not in the future use the sampling and testing provisions in this section in lieu of the provisions in § 80.330.

§ 80.355 [Reserved]

RECORDKEEPING AND REPORTING REQUIREMENTS

§ 80.360 [Reserved]

§ 80.365 What records must be kept?

(a) *Records that must be kept.* Beginning January 1, 2004, any person who produces, imports, sells, offers for sale, dispenses, distributes, supplies, offers for supply, stores, or transports gasoline, shall keep records that contain the following information:

(1) The product transfer document information required under §§ 80.77, 80.106, 80.210 and 80.219; and

(2) For any sampling and testing for sulfur content required under this subpart:

(i) The location, date, time and storage tank or truck identification for each sample collected;

(ii) The name and title of the person who collected the sample and the person who performed the test;

(iii) The results of the test as originally printed by the testing apparatus, or where no printed result is produced, the results as originally recorded by the person who performed the test; and

(iv) Any record that contains a test result for the sample that is not identical to the result recorded under paragraph (a)(2)(iii) of this section.

(b) *Additional records that refiners and importers must keep.* Beginning January 1, 2004, or January 1 of the first year allotments or credits are generated under § 80.275 or § 80.305, whichever is earlier, any refiner for each of its refineries, and any importer for the gasoline it imports, shall keep records that include the following information:

(1) For each batch of gasoline produced or imported:

(i) The batch volume;

(ii) The batch number assigned under § 80.65(d)(3) and the appropriate designation under paragraph (b)(1)(i) of this section; except that if composite samples of conventional gasoline representing multiple batches produced subsequent to December 31, 2003, are tested under § 80.101(i)(2) for anti-dumping compliance purposes, for purposes of this subpart a separate batch number must be assigned to each batch using the batch numbering procedures under § 80.65(d)(3);

(iii) The date of production or importation; and

(iv) If appropriate, the designation of the batch as GPA gasoline under § 80.219, California gasoline under § 80.375, exempt gasoline for research and development under § 80.380, or for export outside the United States.

(2) Information regarding credits and allotments, separately kept for credits and for allotments; separately kept according to the year of creation for the credits and for the allotments; and for credit generation or use starting in 2004, separately kept for GPA gasoline and other gasoline. Information shall be kept separately for different types of allotments and credits generated under §§ 80.275(e)(1), 80.275(e)(2), 80.305 and 80.310:

(i) The number in the refiner's or importer's possession at the beginning of the averaging period;

(ii) The number generated;

(iii) The number used;

(iv) If any were obtained from or transferred to other parties, for each other party its name, its EPA refiner or importer registration number, and the number obtained from, or transferred to, the other party;

(v) The number that expired at the end of the averaging period;

(vi) The number of allotments, by type, that were converted into credits under § 80.275(e);

(vii) The number in the refiner's or importer's possession that will carry over into the subsequent averaging period; and

(viii) Contracts or other commercial documents that establish each transfer of credits and allotments from the transferor to the transferee.

(3) The calculations used to determine the applicable refiner baseline under § 80.250 or § 80.295.

(4) The calculations used to determine compliance with the applicable sulfur average standards of § 80.195, § 80.216, § 80.240, or § 80.270.

(5) The calculations used to determine the number of credits or allotments generated under § 80.305, § 80.310 or § 80.275.

(6) The calculations used to determine any applicable adjusted cap standard under § 80.195(d).

(7) A copy of all reports submitted to EPA under § 80.370.

(c) *Additional records importers must keep.* Any importer shall keep records that identify and verify the source of each batch of certified Sulfur-FRGAS and non-certified Sulfur-FRGAS imported and demonstrate compliance with the requirements for importers under § 80.410(o).

(d) *Length of time records must be kept.* The records required in this section shall be kept for five years from the date they were created; except that:

(1) *Transfers of credits and allotments.* Records relating to credit and allotment transfers, except as provided in paragraph (d)(2) of this section, shall be kept by the transferor for 5 years from the date the credits or allotments are transferred, and shall be kept by the transferee for 5 years from the date the credits or allotments were transferred, used or terminated, whichever is later.

(2) *Early credits.* (i) Where the party generating the credits does not transfer the credits, records must be kept for 5 years from the date of creation, use or termination whichever is later.

(ii) Where early credits are transferred, records relating to such credits shall be kept by both parties for 5 years from the date the credits were transferred, used or terminated, whichever is later.

(e) *Make records available to EPA.* On request by EPA the records required in paragraphs (a), (b) and (c) of this section shall be provided to the Administrator's authorized representative. For records that are electronically generated or maintained the equipment and software necessary to read the records shall be made available, or if requested by EPA, electronic records shall be converted to paper documents which shall be provided to the Administrator's authorized representative.

§ 80.370 What are the sulfur reporting requirements?

Beginning with the 2004 averaging period, or the first year credits or allotments are generated under § 80.275 or § 80.305, whichever is earlier, and continuing for each averaging period thereafter, any refiner or importer shall submit to EPA annual reports that contain the information required in this section, and such other information as EPA may require.

(a) *Refiner and importer annual reports.* Any refiner, for each of its refineries, and any importer for the gasoline it imports, shall submit a report for each calendar year averaging period that includes the following information, and in the case of a refiner or importer producing or importing both GPA gasoline and other gasoline, the information shall be separately reported:

(1) The EPA importer, or refiner and refinery facility registration numbers;

(2) The applicable baseline, average standard, and adjusted cap standard as follows:

(i) For the years 2000 through 2003, the applicable baseline under § 80.250 or § 80.295.

(ii) For the 2004 averaging period and subsequent averaging periods:

(A) All applicable average standards under § 80.195, § 80.216, § 80.240 or § 80.270;

(B) All applicable adjusted cap standards under § 80.195(d), with the 2005 report identifying both the 2004 and 2005 applicable adjusted cap standards;

(3) The total volume of gasoline produced or imported;

(4) The annual average sulfur content of the gasoline produced or imported;

(5) The annual average sulfur level after inclusion of any credits and allotments;

(6) Information, separately provided, for credits and allotments, and separately by year of creation, as follows:

(i) The number of credits and allotments at the beginning of the averaging period;

(ii) The number of credits and allotments generated;

(iii) The number of credits and allotments used;

(iv) If any credits or allotments were obtained from or transferred to other parties, for each other party its name and EPA refiner or importer registration number, and the number of credits or allotments obtained from or transferred to the other party;

(v) The number of credits and allotments that expired at the end of the averaging period;

(vi) The number of credits and allotments that will carry over into the subsequent averaging period; and

(vii) The number of each type of allotments converted to credits;

(7) For each batch of gasoline produced or imported during the averaging period:

(i) The batch number assigned under § 80.65(d)(3) and the appropriate designation under § 80.365; except that if composite samples of conventional gasoline representing multiple batches produced subsequent to December 31, 2003, are tested under § 80.101(i)(2) for anti-dumping compliance purposes, for purposes of this subpart a separate batch number must be assigned to each batch using the batch numbering procedures under § 80.65(d)(3);

(ii) The date the batch was produced;

(iii) The volume of the batch; and

(iv) The sulfur content of the batch as determined under § 80.330; and

(8) When submitting reports under this paragraph (a), any importer shall exclude certified Sulfur-FRGAS.

(b) *Additional reporting requirements for importers.* Any importer shall report the following information for Sulfur-FRGAS imported during the averaging period:

(1) The EPA refiner and refinery registration numbers of each foreign refiner and refinery where the certified Sulfur-FRGAS was produced; and

(2) The total gallons of certified Sulfur-FRGAS and non-certified Sulfur-FRGAS imported from each foreign refiner and refinery.

(c) *Corporate pool average reports.* (1) Annual reports filed under this section for the 2004 and 2005 averaging periods must include the party's corporate pool average as determined under § 80.205.

(2) If the party submitting the annual report under paragraph (c)(1) of this section is a refiner with more than one refinery or is a refiner who also imports gasoline, then for the purposes of this paragraph, the party shall report the information required for individual refineries and for importers under paragraph (a) of this section, also in the aggregate for all the gasoline produced and imported during the calendar year.

(3) Refiners and importers exempted from corporate pool standards under § 80.216 or § 80.240 are exempt from reporting the information required under paragraphs (c)(1) and (c)(2) of this section.

(d) *Report submission.* Any annual report required under this section shall be:

(1) Signed and certified as meeting all of the applicable requirements of this subpart by the owner or a responsible corporate officer of the refiner or importer; and

(2) Submitted to EPA no later than the last day of February for the prior calendar year averaging period.

(f) *Attest reports.* Attest reports for refiner and importer attest engagements required under § 80.415 shall be submitted to the Administrator by May 31 of each year for the prior calendar year averaging period.

§§ 80.371—80.373 [Reserved]

EXEMPTIONS

§ 80.374 What if a refiner or importer is unable to produce gasoline conforming to the requirements of this subpart?

In appropriate extreme and unusual circumstances (*e.g.*, natural disaster or Act of God) which are clearly outside the control of the refiner or importer and which could not have been avoided by the exercise of prudence, diligence,

and due care, EPA may permit a refiner or importer, for a brief period, to distribute gasoline which does not meet the requirements of this subpart provided the refiner or importer meets all the criteria, requirements and conditions contained in § 80.73 (a) through (e).

§ 80.375 What requirements apply to California gasoline?

(a) *Definition.* For purposes of this subpart *California gasoline* means any gasoline designated by the refiner as for use in California.

(b) *California gasoline exemption.* California gasoline that complies with all the requirements of this section is exempt from all other provisions of this subpart.

(c) *Requirements for California gasoline.* The requirements are:

(1) Each batch of California gasoline must be designated as such by its refiner or importer;

(2) Designated California gasoline must be kept segregated from gasoline that is not California gasoline, at all points in the distribution system;

(3) Designated California gasoline must ultimately be used in the State of California and not used elsewhere;

(4) In the case of California gasoline produced outside the State of California, the transferors and transferees must meet the product transfer document requirements under § 80.81(g); and

(5) Gasoline that is ultimately used in any part of the United States outside of the State of California must comply with the standards and requirements of this subpart, regardless of any designation as California gasoline.

(d) *Use of California test methods and off site sampling procedures.* In the case of any gasoline that is not California gasoline and that is either produced at a refinery located in the State of California or is imported from outside the United States into the State of California, the refiner or importer may, with regard to such gasoline:

(1) Use the sampling and testing methods approved in Title 13 of the California Code of Regulations instead of the sampling and testing methods required under § 80.330; and

(2) Determine the sulfur content of gasoline at off site tankage as permitted in § 80.81(h)(2).

§ 80.380 What are the requirements for obtaining an exemption for gasoline used for research, development or testing purposes?

Any person may request an exemption from the provisions of this subpart for gasoline used for research, development or testing (''R&D'') purposes by submitting to EPA an application that includes all the information listed in paragraph (b) of this section.

(a) *Criteria for an R&D exemption.* For an R&D exemption to be granted, the proposed test program must:

(1) Have a purpose that constitutes an appropriate basis for exemption;

(2) Necessitate the granting of an exemption;

(3) Be reasonable in scope; and

(4) Have a degree of control consistent with the purpose of the program and EPA's monitoring requirements.

(b) *Information required to be submitted.* To demonstrate each of the four elements in paragraphs (a)(1) through (4) of this section, the application required under this section must include the following information:

(1) A statement of the purpose of the program demonstrating that the program has an appropriate R&D purpose.

(2) An explanation of why the stated purpose of the program cannot be achieved in a practicable manner without performing one or more of the prohibited acts under § 80.385.

(3) To demonstrate the reasonableness of the scope of the program:

(i) An estimate of the program's beginning and ending dates;

(ii) An estimate of the maximum number of vehicles and engines involved in the program, and the number of miles and engine hours that will be accumulated on each;

(iii) The sulfur content of the gasoline expected to be used in the program; and

(iv) The quantity of gasoline that exceeds the applicable sulfur standard that is expected to be used in the program.

(4) With regard to control, a demonstration that the program affords

EPA a monitoring capability, including at a minimum:

(i) A description of the technical and operational aspects of the program;

(ii) The site(s) of the program (including street address, city, county, State, and ZIP code);

(iii) The manner in which information on vehicles and engines used in the program will be recorded and made available to EPA;

(iv) The manner in which results of the program will be recorded and made available to EPA;

(v) The manner in which information on the gasoline used in the program (including quantity, sulfur content, name, address, telephone number and contact person of the supplier, and the date received from the supplier), will be recorded and made available to EPA;

(vi) The manner in which distribution pumps will be labeled to insure proper use of the gasoline where appropriate;

(vii) The name, address, telephone number and title of the person(s) in the organization requesting an exemption from whom further information on the application may be obtained; and

(viii) The name, address, telephone number and title of the person(s) in the organization requesting an exemption who is responsible for recording and making available the information specified in paragraphs (b)(4)(iii), (iv) and (v) of this section, and the location in which such information will be maintained.

(c) *Additional requirements.* (1) The product transfer documents associated with R&D gasoline must identify the gasoline as such, and must state that the gasoline is to be used only for research, development, or testing purposes.

(2) The R&D gasoline must be designated by the refiner or importer as exempt R&D gasoline.

(3) The R&D gasoline must be kept segregated from non-exempt gasoline at all points in the distribution system of the gasoline.

(4) The R&D gasoline must not be sold, distributed, offered for sale or distribution, dispensed, supplied, offered for supply, transported to or from, or stored by a gasoline retail outlet, or by a wholesale purchaser-consumer facility, unless the wholesale purchaser-consumer facility is associated with the R&D program that uses the gasoline.

(d) *Memorandum of exemption.* The Administrator will grant an R&D exemption upon a demonstration that the requirements of this section have been met. The R&D exemption will be granted in the form of a memorandum of exemption signed by the applicant and the Administrator (or delegate), which may include such terms and conditions as the Administrator determines necessary to monitor the exemption and to carry out the purposes of this section, including restoration of motor vehicle emissions control systems. Any violation of such a term or condition of the exemption or any requirement under this section will cause the exemption to be void ab initio.

(e) *Effects of exemption.* Gasoline that is subject to an R&D exemption under this section is exempt from other provisions of this subpart provided that the gasoline is used in a manner that complies with the memorandum of exemption granted under paragraph (d) of this section.

VIOLATION PROVISIONS

§ 80.385 What acts are prohibited under the gasoline sulfur program?

No person shall:

(a) *Averaging violation.* Produce or import gasoline that does not comply with the applicable sulfur average standard under § 80.195, § 80.216 or § 80.240.

(b) *Cap standard violation.* Produce, import, sell, offer for sale, dispense, supply, offer for supply, store or transport gasoline that does not comply with the applicable sulfur cap standard under § 80.195, § 80.216, § 80.210, § 80.220 or § 80.240.

(c) *Causing an averaging, cap standard, or geographic phase-in area (GPA) use violation.* Cause another person to commit an act in violation of paragraph (a), (b), or (f) of this section.

(d) *Causing violating gasoline to be in the distribution system.* Cause gasoline to be in the distribution system which does not comply with an applicable sulfur cap standard under § 80.195, § 80.210,

§ 80.216, § 80.220 or § 80.240; a sulfur average standard under § 80.195, § 80.216 or § 80.240; or a GPA use prohibition under § 80.219(c).

(e) *Denatured ethanol violation.* Blend into gasoline denatured ethanol with a sulfur content higher than 30 ppm.

(f) *GPA use violation.* Produce, import, sell, offer for sale, dispense, supply, offer for supply, store or transport gasoline that does not comply with a GPA use prohibition under § 80.219(c).

§ 80.390 What evidence may be used to determine compliance with the prohibitions and requirements of this subpart and liability for violations of this subpart?

(a) Compliance with the sulfur standards of this subpart shall be determined based on the sulfur level of the gasoline, measured using the methodologies specified in §§ 80.330(b) and 80.46(a). Any evidence or information, including the exclusive use of such evidence or information, may be used to establish the sulfur level of gasoline if the evidence or information is relevant to whether the sulfur level of gasoline would have been in compliance with the standards if the appropriate sampling and testing methodology had been correctly performed. Such evidence may be obtained from any source or location and may include, but is not limited to, test results using methods other than those specified in §§ 80.330(b) and 80.46(a), business records, and commercial documents.

(b) Determinations of compliance with the requirements of this subpart other than the sulfur standards, and determinations of liability for any violation of this subpart, may be based on information obtained from any source or location. Such information may include, but is not limited to, business records and commercial documents.

§ 80.395 Who is liable for violations under the gasoline sulfur program?

(a) *Persons liable for violations of prohibited acts.*—(1) *Averaging violation.* Any refiner or importer who violates § 80.385(a) is liable for the violation.

(2) *Causing an averaging violation.* Any refiner, importer, distributor, reseller, carrier, retailer, wholesale purchaser-consumer, or oxygenate blender who causes another party to violate § 80.385(a), is liable for a violation of § 80.385(c).

(3) *Cap standard violation.* Any refiner, importer, distributor, reseller, carrier, retailer, wholesale purchaser-consumer, or oxygenate blender who owned, leased, operated, controlled or supervised a facility where a violation of § 80.385 (b) occurred, is deemed in violation of § 80.385(b).

(4) *Causing a cap standard violation.* Any refiner, importer, distributor, reseller, carrier, retailer, wholesale purchaser-consumer, or oxygenate blender who produced, imported, sold, offered for sale, dispensed, supplied, offered for supply, stored, transported, or caused the transportation or storage of gasoline that violates § 80.385(b), is deemed in violation of § 80.385(c).

(5) *GPA use violation.* Any refiner, importer, distributor, reseller, carrier, retailer, wholesale purchaser-consumer, or oxygenate blender who produced, imported, sold, offered for sale, dispensed, supplied, offer for supply, stored, transported, or caused the transportation or storage of gasoline that violates § 80.385(f), is deemed in violation of § 80.385(f).

(6) *Causing a GPA use violation.* Any refiner, importer, distributor, reseller, carrier, retailer, wholesale purchaser-consumer, or oxygenate blender who causes another party to violate § 80.385(f), is deemed liable for a violation of § 80.385(c).

(7) *Branded refiner/importer liability.* Any refiner or importer whose corporate, trade, or brand name, or whose marketing subsidiary's corporate, trade, or brand name appeared at a facility where a violation of § 80.385(b) or (f) occurred, is deemed in violation of § 80.385(b) or (f), as applicable.

(8) *Causing violating gasoline to be in the distribution system.* Any refiner, importer, distributor, reseller, carrier, or oxygenate blender, who owned, leased, operated, controlled or supervised a facility from which gasoline was released into the distribution system which does not comply with an applicable sulfur cap standard, a sulfur averaging standard, or a GPA use prohibition, is deemed in violation of § 80.385(d).

(9) *Carrier causation.* In order for a carrier to be liable under paragraph (a)(2), (4), (6), or (8) of this section, EPA

must demonstrate, by reasonably specific showing by direct or circumstantial evidence, that the carrier caused the violation.

(10) *Denatured ethanol violation.* Any oxygenate blender who violates § 80.385(e) is liable for the violation.

(11) *Parent corporation liability.* Any parent corporation is liable for any violations of this subpart that are committed by any of its wholly-owned subsidiaries.

(12) *Joint venture liability.* Each partner to a joint venture is jointly and severally liable for any violation of this subpart that occurs at the joint venture facility or is committed by the joint venture operation.

(b) *Persons liable for failure to meet other provisions of this subpart.* (1) Any refiner, importer, distributor, reseller, carrier, wholesale purchaser-consumer, retailer, or oxygenate blender who fails to meet a provision of this subpart not addressed in paragraph (a) of this section is liable for a violation of that provision.

(2) Any refiner, importer, distributor, reseller, carrier, wholesale purchaser-consumer, retailer, or oxygenate blender who caused another person to fail to meet a requirement of this subpart not addressed in paragraph (a) of this section, is liable for causing a violation of that provision.

§ 80.400 What defenses apply to persons deemed liable for a violation of a prohibited act?

(a) Any person deemed liable for a violation of a prohibition under § 80.395 (a)(3) through (8), will not be deemed in violation if the person demonstrates that:

(1) The violation was not caused by the person or the person's employee or agent; and

(2) The person conducted a quality assurance sampling and testing program, as described in paragraph (d) of this section. A carrier may rely on the quality assurance program carried out by another party, including the party who owns the gasoline in question, provided that the quality assurance program is carried out properly. Retailers and wholesale purchaser-consumers are not required to conduct quality assurance programs.

(b) In the case of a violation found at a facility operating under the corporate, trade or brand name of a refiner or importer, or a refiner's or importer's marketing subsidiary, the refiner or importer must show, in addition to the defense elements required under paragraphs (a)(1) and (2) of this section, that the violation was caused by:

(1) An act in violation of law (other than the Clean Air Act or this part 80), or an act of sabotage or vandalism;

(2) The action of any refiner, importer, retailer, distributor, reseller, oxygenate blender, carrier, retailer or wholesale purchaser-consumer in violation of a contractual agreement between the branded refiner or importer and the person designed to prevent such action, and despite periodic sampling and testing by the branded refiner or importer to ensure compliance with such contractual obligation; or

(3) The action of any carrier or other distributor not subject to a contract with the refiner or importer, but engaged for transportation of gasoline, despite specifications or inspections of procedures and equipment which are reasonably calculated to prevent such action.

(c) Under paragraph (a) of this section for any person to show that a violation was not caused by that person, or under paragraph (b) of this section to show that a violation was caused by any of the specified actions, the person must demonstrate by reasonably specific showing, by direct or circumstantial evidence, that the violation was caused or must have been caused by another person and that the person asserting the defense did not contribute to that other person's causation.

(d) *Quality assurance and testing program.* To demonstrate an acceptable quality assurance and testing program under paragraph (a)(2) of this section, a person must present evidence of the following:

(1) A periodic sampling and testing program to ensure the gasoline the person sold, dispensed, supplied, stored, or transported, meets the applicable sulfur standard; and

(2) On each occasion when gasoline is found not in compliance with the applicable sulfur standard:

(i) The person immediately ceases selling, offering for sale, dispensing, supplying, offering for supply, storing or transporting the non-complying product; and

(ii) The person promptly remedies the violation and the factors that caused the violation (for example, by removing the non-complying product from the distribution system until the applicable standard is achieved and taking steps to prevent future violations of a similar nature from occurring).

(3) For any carrier who transports gasoline in a tank truck, the quality assurance program required under this paragraph (d) need not include periodic sampling and testing of gasoline in the tank truck, but in lieu of such tank truck sampling and testing, the carrier shall demonstrate evidence of an oversight program for monitoring compliance with the requirements of this subpart relating to the transport or storage of gasoline by tank truck, such as appropriate guidance to drivers regarding compliance with the applicable sulfur standard and product transfer document requirements, and the periodic review of records received in the ordinary course of business concerning gasoline quality and delivery.

§ 80.405 What penalties apply under this subpart?

(a) Any person liable for a violation under § 80.395 is subject to civil penalties as specified in section 205 of the Clean Air Act for every day of each such violation and the amount of economic benefit or savings resulting from each violation.

(b) Any person liable under § 80.395(a)(1) or (2) for a violation of the applicable sulfur averaging standard or causing another party to violate that standard during any averaging period, is subject to a separate day of violation for each and every day in the averaging period. Any person liable under § 80.395(b) for a failure to fulfill any requirement for credit or allotment generation, transfer, use, banking, or deficit correction, is subject to a separate day of violation for each and every day in the averaging period in which invalid credits or allotments are generated or used.

(c)(1) Any person liable under § 80.395(a)(3), (4), (5), or (6) for a violation of an applicable sulfur per gallon cap standard under § 80.195, § 80.210, § 80.216, § 80.220 or § 80.240, a GPA use prohibition under § 80.219(c), or of causing another party to violate a cap standard or a GPA use prohibition, is subject to a separate day of violation for each and every day the non-complying gasoline remains any place in the gasoline distribution system.

(2) Any person liable under § 80.395(a)(8) for causing gasoline to be in the distribution system which does not comply with an applicable sulfur cap standard, a sulfur averaging standard, or a GPA use prohibition, is subject to a separate day of violation for each and every day that the non-complying gasoline remains any place in the gasoline distribution system.

(3) For purposes of paragraph (c) of this section, the length of time the gasoline in question remained in the gasoline distribution system is deemed to be twenty-five days, unless a person subject to liability or EPA demonstrates by reasonably specific showings, by direct or circumstantial evidence, that the non-complying gasoline remained in the gasoline distribution system for fewer than or more than twenty-five days.

(d) Any person liable under § 80.395(b) for failure to meet, or causing a failure to meet, a provision of this subpart is liable for a separate day of violation for each and every day such provision remains unfulfilled.

PROVISIONS FOR FOREIGN REFINERS WITH INDIVIDUAL SULFUR BASELINES

§ 80.410 What are the additional requirements for gasoline produced at foreign refineries having individual small refiner sulfur baselines, foreign refineries granted temporary relief under § 80.270, or baselines for generating credits during 2000 through 2003?

(a) *Definitions.* (1) A foreign refinery is a refinery that is located outside the United States, the Commonwealth of Puerto Rico, the Virgin Islands, Guam, American Samoa, and the Commonwealth of the Northern Mariana Islands (collectively referred to in this section as ''the United States'').

(2) A foreign refiner is a person who meets the definition of refiner under § 80.2(i) for a foreign refinery.

(3) A small foreign refiner is a refiner that meets the definition of a small refiner under § 80.225.

(4) ''Sulfur-FRGAS'' means gasoline produced at a foreign refinery that has been assigned an individual refinery sulfur baseline under §§ 80.250 or 80.295, or has been granted temporary relief under § 80.270, and that is imported into the United States.

(5) ''Non-Sulfur-FRGAS'' means gasoline that is produced at a foreign refinery that has not been assigned an individual refinery sulfur baseline, gasoline produced at a foreign refinery with an individual refinery sulfur baseline that is not imported into the United States, and gasoline produced at a foreign refinery with an individual sulfur baseline during a year when the foreign refiner has opted to not participate in the Sulfur-FRGAS program under paragraph (c)(3) of this section.

(6) ''Certified Sulfur-FRGAS'' means Sulfur-FRGAS the foreign refiner intends to include in the foreign refinery's sulfur compliance calculations under § 80.205 pursuant to § 80.240 or § 80.270 or credit calculations under §§ 80.305 or 80.310 and allotment calculations under § 80.275(a), and does include in these compliance calculations when reported to EPA.

(7) ''Non-Certified Sulfur-FRGAS'' means Sulfur-FRGAS that is not Certified Sulfur-FRGAS.

(b) *Baseline establishment*. Any foreign refiner who does not have an approved refinery baseline under § 80.94 may submit a petition to the Administrator for an individual refinery sulfur baseline pursuant to §§ 80.245 and 80.250, a baseline for generating credits or allotments under §§ 80.290 and 80.295, or a baseline for temporary refinery relief under §§ 80.270 and 80.295.

(1) The refiner shall follow the procedures specified in §§ 80.91 through 80.93 to establish the volume and sulfur content of gasoline that was produced at the foreign refinery and imported into the United States during 1997 and 1998 for purposes of establishing baselines under § 80.250 or § 80.295.

(2) In making determinations for foreign refinery baselines EPA will consider all information supplied by a foreign refiner, and in addition may rely on any and all appropriate assumptions necessary to make such determinations.

(3) Where a foreign refiner submits a petition that is incomplete or inadequate to establish an accurate baseline, and the refiner fails to cure this defect after a request for more information, EPA will not assign an individual refinery sulfur baseline.

(c) *General requirements for foreign refiners with individual refinery sulfur baselines*. A foreign refiner of a refinery that has been assigned an individual sulfur baseline under § 80.250 or § 80.295 must designate all gasoline produced at the foreign refinery that is exported to the United States as either Certified Sulfur-FRGAS or as Non-Certified Sulfur-FRGAS, except as provided in paragraph (c)(3) of this section.

(1) In the case of Certified Sulfur-FRGAS, the foreign refiner must meet all provisions that apply to refiners under this subpart H.

(2) In the case of Non-Certified Sulfur-FRGAS, the foreign refiner shall meet all the following provisions, except the foreign refiner shall substitute the name Non-Certified Sulfur-FRGAS for the names ''reformulated gasoline'' or ''RBOB'' wherever they appear in the following provisions:

(i) The designation requirements in this section;

(ii) The recordkeeping requirements under § 80.365;

(iii) The reporting requirements in § 80.370 and this section;

(iv) The product transfer document requirements in this section;

(v) The prohibitions in this section and § 80.385; and

(vi) The independent audit requirements under § 80.415, paragraph (h) of this section, §§ 80.125 through 80.127, § 80.128(a),(b),(c),(g) through (i), and § 80.130.

(3)(i) Any foreign refiner that generates sulfur credits under § 80.305 during the period 2000 through 2003, or allotments under § 80.275(a) during 2003, and any small refiner generating credits under § 80.310, shall designate all Sulfur-FRGAS as Certified Sulfur-FRGAS for any year that such credits are generated.

(ii) Any foreign refiner that has been assigned an individual sulfur baseline for a foreign refinery under § 80.250 or § 80.295 may elect to classify no gasoline imported into the United States as Sulfur-FRGAS, provided the foreign refiner notifies EPA of the election no later than November 1 of the prior calendar year.

(iii) An election under paragraph (c)(3)(ii) of this section shall:

(A) Apply to an entire calendar year averaging period, and apply to all gasoline produced during the calendar year at the foreign refinery that is used in the United States; and

(B) Remain in effect for each succeeding calendar year averaging period, unless and until the foreign refiner notifies EPA of a termination of the election. The change in election shall take effect at the beginning of the next calendar year.

(d) *Designation, product transfer documents, and foreign refiner certification.* (1) Any foreign refiner of a foreign refinery that has been assigned an individual sulfur baseline must designate each batch of Sulfur-FRGAS as such at the time the gasoline is produced, unless the refinery has elected to classify no gasoline exported to the United States as Sulfur-FRGAS under paragraph (c)(3)(ii) of this section.

(2) On each occasion when any person transfers custody or title to any Sulfur-FRGAS prior to its being imported into the United States, it must include the following information as part of the product transfer document information in this section:

(i) Identification of the gasoline as Certified Sulfur-FRGAS or as Non-Certified Sulfur-FRGAS; and

(ii) The name and EPA refinery registration number of the refinery where the Sulfur-FRGAS was produced.

(3) On each occasion when Sulfur-FRGAS is loaded onto a vessel or other transportation mode for transport to the United States, the foreign refiner shall prepare a certification for each batch of the Sulfur-FRGAS that meets the following requirements:

(i) The certification shall include the report of the independent third party under paragraph (f) of this section, and the following additional information:

(A) The name and EPA registration number of the refinery that produced the Sulfur-FRGAS;

(B) The identification of the gasoline as Certified Sulfur-FRGAS or Non-Certified Sulfur-FRGAS;

(C) The volume of Sulfur-FRGAS being transported, in gallons;

(D) In the case of Certified Sulfur-FRGAS:

(*1*) The sulfur content as determined under paragraph (f) of this section; and

(*2*) A declaration that the Sulfur-FRGAS is being included in the compliance calculations under § 80.205 or credit calculations under § 80.305 or allotments under § 80.275(a) for the refinery that produced the Sulfur-FRGAS.

(ii) The certification shall be made part of the product transfer documents for the Sulfur-FRGAS. Prior to 2004, the information required under paragraph (d)(3)(i)(D)(*1*) of this section may be omitted from the product transfer documents that accompany the gasoline, provided that such information is provided to the United States importer prior to collection of the representative sample required under paragraph (o)(3)(ii)(A) of this section.

(e) *Transfers of Sulfur-FRGAS to non-United States markets.* The foreign refiner is responsible to ensure that all gasoline classified as Sulfur-FRGAS is imported into the United States. A foreign refiner may remove the Sulfur-FRGAS classification, and the gasoline need not be imported into the United States, but only if:

(1)(i) The foreign refiner excludes:

(A) The volume of gasoline from the refinery's compliance calculations under § 80.205; and

(B) In the case of Certified Sulfur-FRGAS, the volume and sulfur content of the gasoline from the compliance calculations under § 80.205 or credit calculations under § 80.305.

(ii) The exclusions under paragraph (e)(1)(i) of this section shall be on the basis of the sulfur content and volumes determined under paragraph (f) of this section; and

(2) The foreign refiner obtains sufficient evidence in the form of documentation that the gasoline was not imported into the United States.

(f) *Load port independent sampling, testing and refinery identification.* (1) On

each occasion Sulfur-FRGAS is loaded onto a vessel for transport to the United States a foreign refiner shall have an independent third party:

(i) Inspect the vessel prior to loading and determine the volume of any tank bottoms;

(ii) Determine the volume of Sulfur-FRGAS loaded onto the vessel (exclusive of any tank bottoms present before vessel loading);

(iii) Obtain the EPA-assigned registration number of the foreign refinery;

(iv) Determine the name and country of registration of the vessel used to transport the Sulfur-FRGAS to the United States; and

(v) Determine the date and time the vessel departs the port serving the foreign refinery.

(2) On each occasion Certified Sulfur-FRGAS is loaded onto a vessel for transport to the United States a foreign refiner shall have an independent third party:

(i) Collect a representative sample of the Certified Sulfur-FRGAS from each vessel compartment subsequent to loading on the vessel and prior to departure of the vessel from the port serving the foreign refinery;

(ii) Prepare a volume-weighted vessel composite sample from the compartment samples, and determine the value for sulfur in accordance with the methodology and requirements specified in § 80.330, by:

(A) The third party analyzing the sample; or

(B) The third party observing the foreign refiner analyze the sample;

(iii) Review original documents that reflect movement and storage of the certified Sulfur-FRGAS from the refinery to the load port, and from this review determine:

(A) The refinery at which the Sulfur-FRGAS was produced; and

(B) That the Sulfur-FRGAS remained segregated from:

(*1*) Non-Sulfur-FRGAS and Non-Certified Sulfur-FRGAS; and

(*2*) Other Certified Sulfur-FRGAS produced at a different refinery.

(3) The independent third party shall submit a report:

(i) To the foreign refiner containing the information required under paragraphs (f)(1) and (2) of this section, to accompany the product transfer documents for the vessel; and

(ii) To the Administrator containing the information required under paragraphs (f)(1) and (2) of this section, within thirty days following the date of the independent third party's inspection. This report shall include a description of the method used to determine the identity of the refinery at which the gasoline was produced, assurance that the gasoline remained segregated as specified in paragraph (n)(1) of this section, and a description of the gasoline's movement and storage between production at the source refinery and vessel loading.

(4) The independent third party must:

(i) Be approved in advance by EPA, based on a demonstration of ability to perform the procedures required in this paragraph (f);

(ii) Be independent under the criteria specified in § 80.65(e)(2)(iii); and

(iii) Sign a commitment that contains the provisions specified in paragraph (i) of this section with regard to activities, facilities and documents relevant to compliance with the requirements of this paragraph (f).

(g) *Comparison of load port and port of entry testing.* (1)(i) Except as described in paragraph (g)(1)(ii) of this section, any foreign refiner and any United States importer of Certified Sulfur-FRGAS shall compare the results from the load port testing under paragraph (f) of this section, with the port of entry testing as reported under paragraph (o) of this section, for the volume of gasoline and the sulfur value.

(ii) Where a vessel transporting Certified Sulfur-FRGAS off loads this gasoline at more than one United States port of entry, and the conditions of paragraph (g)(2)(i) of this section are met at the first United States port of entry, the requirements of paragraph (g)(2) of this section do not apply at subsequent ports of entry if the United States importer obtains a certification from the vessel owner, that meets the requirements of paragraph (s) of this section, that the vessel has not loaded any gasoline or blendstock between the first United States port of entry and the subsequent port of entry.

(2)(i) The requirements of this paragraph (g)(2) apply if:

(A) The temperature-corrected volumes determined at the port of entry and at the load port differ by more than one percent; or

(B) The sulfur value determined at the port of entry is higher than the sulfur value determined at the load port, and the amount of this difference is greater than the reproducibility amount specified for the port of entry test result by the American Society of Testing and Materials (ASTM).

(ii) The United States importer and the foreign refiner shall treat the gasoline as Non-Certified Sulfur-FRGAS, and the foreign refiner shall exclude the gasoline volume and properties from its gasoline sulfur compliance calculations under § 80.205.

(h) *Attest requirements*. The following additional procedures shall be carried out by any foreign refiner of Sulfur-FRGAS as part of the applicable attest engagement for each foreign refinery under § 80.415:

(1) The inventory reconciliation analysis under § 80.128(b) and the tender analysis under § 80.128(c) shall include Non-Sulfur-FRGAS in addition to the gasoline types listed in § 80.128(b) and (c).

(2) Obtain separate listings of all tenders of Certified Sulfur-FRGAS, and of Non-Certified Sulfur-FRGAS. Agree the total volume of tenders from the listings to the gasoline inventory reconciliation analysis in § 80.128(b), and to the volumes determined by the third party under paragraph (f)(1) of this section.

(3) For each tender under paragraph (h)(2) of this section where the gasoline is loaded onto a marine vessel, report as a finding the name and country of registration of each vessel, and the volumes of Sulfur-FRGAS loaded onto each vessel.

(4) Select a sample from the list of vessels identified in paragraph (h)(3) of this section used to transport Certified Sulfur-FRGAS, in accordance with the guidelines in § 80.127, and for each vessel selected perform the following:

(i) Obtain the report of the independent third party, under paragraph (f) of this section, and of the United States importer under paragraph (o) of this section.

(A) Agree the information in these reports with regard to vessel identification, gasoline volumes and test results.

(B) Identify, and report as a finding, each occasion the load port and port of entry parameter and volume results differ by more than the amounts allowed in paragraph (g) of this section, and determine whether the foreign refiner adjusted its refinery calculations as required in paragraph (g) of this section.

(ii) Obtain the documents used by the independent third party to determine transportation and storage of the Certified Sulfur-FRGAS from the refinery to the load port, under paragraph (f) of this section. Obtain tank activity records for any storage tank where the Certified Sulfur-FRGAS is stored, and pipeline activity records for any pipeline used to transport the Certified Sulfur-FRGAS, prior to being loaded onto the vessel. Use these records to determine whether the Certified Sulfur-FRGAS was produced at the refinery that is the subject of the attest engagement, and whether the Certified Sulfur-FRGAS was mixed with any Non-Certified Sulfur-FRGAS, Non-Sulfur-FRGAS, or any Certified Sulfur-FRGAS produced at a different refinery.

(5)(i) Select a sample from the list of vessels identified in paragraph (h)(3) of this section used to transport certified and Non-Certified Sulfur-FRGAS, in accordance with the guidelines in § 80.127, and for each vessel selected perform the following:

(ii) Obtain a commercial document of general circulation that lists vessel arrivals and departures, and that includes the port and date of departure of the vessel, and the port of entry and date of arrival of the vessel. Agree the vessel's departure and arrival locations and dates from the independent third party and United States importer reports to the information contained in the commercial document.

(6) Obtain separate listings of all tenders of Non-Sulfur-FRGAS, and perform the following:

(i) Agree the total volume of tenders from the listings to the gasoline inventory reconciliation analysis in § 80.128(b).

(ii) Obtain a separate listing of the tenders under paragraph (h)(6) of this section where the gasoline is loaded onto a marine vessel. Select a sample from this listing in accordance with the guidelines in § 80.127, and obtain a commercial document of general circulation that lists vessel arrivals and departures, and that includes the port and date of departure and the ports and dates where the gasoline was off loaded for the selected vessels. Determine and report as a finding the country where the gasoline was off loaded for each vessel selected.

(7) In order to complete the requirements of this paragraph (h) an auditor shall:

(i) Be independent of the foreign refiner;

(ii) Be licensed as a Certified Public Accountant in the United States and a citizen of the United States, or be approved in advance by EPA based on a demonstration of ability to perform the procedures required in §§ 80.125 through 80.130 and this paragraph (h); and

(iii) Sign a commitment that contains the provisions specified in paragraph (i) of this section with regard to activities and documents relevant to compliance with the requirements of §§ 80.125 through 80.130, § 80.415 and this paragraph (h).

(i) *Foreign refiner commitments.* Any foreign refiner shall commit to and comply with the provisions contained in this paragraph (i) as a condition to being assigned an individual refinery sulfur baseline.

(1) Any United States Environmental Protection Agency inspector or auditor will be given full, complete and immediate access to conduct inspections and audits of the foreign refinery.

(i) Inspections and audits may be either announced in advance by EPA, or unannounced.

(ii) Access will be provided to any location where:

(A) Gasoline is produced;

(B) Documents related to refinery operations are kept;

(C) Gasoline or blendstock samples are tested or stored; and

(D) Sulfur-FRGAS is stored or transported between the foreign refinery and the United States, including storage tanks, vessels and pipelines.

(iii) Inspections and audits may be by EPA employees or contractors to EPA.

(iv) Any documents requested that are related to matters covered by inspections and audits will be provided to an EPA inspector or auditor on request.

(v) Inspections and audits by EPA may include review and copying of any documents related to:

(A) Refinery baseline establishment, including the volume and sulfur content, and transfers of title or custody, of any gasoline or blendstocks, whether Sulfur-FRGAS or Non-Sulfur-FRGAS, produced at the foreign refinery during the period January 1, 1997 through the date of the refinery baseline petition or through the date of the inspection or audit if a baseline petition has not been approved, and any work papers related to refinery baseline establishment;

(B) The volume and sulfur content of Sulfur-FRGAS;

(C) The proper classification of gasoline as being Sulfur-FRGAS or as not being Sulfur-FRGAS, or as Certified Sulfur-FRGAS or as Non-Certified Sulfur-FRGAS;

(D) Transfers of title or custody to Sulfur-FRGAS;

(E) Sampling and testing of Sulfur-FRGAS;

(F) Work performed and reports prepared by independent third parties and by independent auditors under the requirements of this section and § 80.415 including work papers; and

(G) Reports prepared for submission to EPA, and any work papers related to such reports.

(vi) Inspections and audits by EPA may include taking samples of gasoline or blendstock, and interviewing employees.

(vii) Any employee of the foreign refiner will be made available for interview by the EPA inspector or auditor, on request, within a reasonable time period.

(viii) English language translations of any documents will be provided to

an EPA inspector or auditor, on request, within 10 working days.

(ix) English language interpreters will be provided to accompany EPA inspectors and auditors, on request.

(2) An agent for service of process located in the District of Columbia will be named, and service on this agent constitutes service on the foreign refiner or any employee of the foreign refiner for any action by EPA or otherwise by the United States related to the requirements of this subpart H.

(3) The forum for any civil or criminal enforcement action related to the provisions of this section for violations of the Clean Air Act or regulations promulgated thereunder shall be governed by the Clean Air Act, including the EPA administrative forum where allowed under the Clean Air Act.

(4) United States substantive and procedural laws shall apply to any civil or criminal enforcement action against the foreign refiner or any employee of the foreign refiner related to the provisions of this section.

(5) Submitting a petition for an individual refinery sulfur baseline, producing and exporting gasoline under an individual refinery sulfur baseline, and all other actions to comply with the requirements of this subpart H relating to the establishment and use of an individual refinery sulfur baseline constitute actions or activities that satisfy the provisions of 28 U.S.C. section 1605(a)(2), but solely with respect to actions instituted against the foreign refiner, its agents and employees in any court or other tribunal in the United States for conduct that violates the requirements applicable to the foreign refiner under this subpart H, including conduct that violates Title 18 U.S.C. section 1001 and Clean Air Act section 113(c)(2).

(6) The foreign refiner, or its agents or employees, will not seek to detain or to impose civil or criminal remedies against EPA inspectors or auditors, whether EPA employees or EPA contractors, for actions performed within the scope of EPA employment related to the provisions of this section.

(7) The commitment required by this paragraph (i) shall be signed by the owner or president of the foreign refiner business.

(8) In any case where Sulfur-FRGAS produced at a foreign refinery is stored or transported by another company between the refinery and the vessel that transports the Sulfur-FRGAS to the United States, the foreign refiner shall obtain from each such other company a commitment that meets the requirements specified in paragraphs (i)(1) through (7) of this section, and these commitments shall be included in the foreign refiner's baseline petition.

(j) *Sovereign immunity*. By submitting a petition for an individual foreign refinery baseline under this section, or by producing and exporting gasoline to the United States under an individual refinery sulfur baseline under this section, the foreign refiner, its agents and employees, without exception, become subject to the full operation of the administrative and judicial enforcement powers and provisions of the United States without limitation based on sovereign immunity, with respect to actions instituted against the foreign refiner, its agents and employees in any court or other tribunal in the United States for conduct that violates the requirements applicable to the foreign refiner under this subpart H, including conduct that violates Title 18 U.S.C. section 1001 and Clean Air Act section 113(c)(2).

(k) *Bond posting*. Any foreign refiner shall meet the requirements of this paragraph (k) as a condition to being assigned an individual refinery sulfur baseline.

(l) The foreign refiner shall post a bond of the amount calculated using the following equation:

$$Bond = G \times \$\ 0.01$$

where:

Bond=amount of the bond in U. S. dollars.

G=the largest volume of gasoline produced at the foreign refinery and exported to the United States, in gallons, during a single calendar year among the most recent of the following calendar years, up to a maximum of five calendar years: the calendar year immediately preceding the date the baseline petition is submitted, the calendar

year the baseline petition is submitted, and each succeeding calendar year.

(2) Bonds shall be posted by:

(i) Paying the amount of the bond to the Treasurer of the United States;

(ii) Obtaining a bond in the proper amount from a third party surety agent that is payable to satisfy United States administrative or judicial judgments against the foreign refiner, provided EPA agrees in advance as to the third party and the nature of the surety agreement; or

(iii) An alternative commitment that results in assets of an appropriate liquidity and value being readily available to the United States, provided EPA agrees in advance as to the alternative commitment.

(3) If the bond amount for a foreign refinery increases, the foreign refiner shall increase the bond to cover the shortfall within 90 days of the date the bond amount changes. If the bond amount decreases, the foreign refiner may reduce the amount of the bond beginning 90 days after the date the bond amount changes.

(4) Bonds posted under this paragraph (k) shall:

(i) Be used to satisfy any judicial judgment that results from an administrative or judicial enforcement action for conduct in violation of this subpart H, including where such conduct violates Title 18 U.S.C. section 1001 and Clean Air Act section 113(c)(2);

(ii) Be provided by a corporate surety that is listed in the United States Department of Treasury Circular 570 ''Companies Holding Certificates of Authority as Acceptable Sureties on Federal Bonds and Acceptable Reinsuring Companies'' (Available from the U.S. Department of the Treasury, Financial Management Service, Surety Bond Branch, 3700 East-West Highway, Room 6A04, Hyattsville, Md. 20782. Also available on the internet at http://www.fms.treas.gov/c570/c570.html); and

(iii) Include a commitment that the bond will remain in effect for at least five (5) years following the end of latest averaging period that the foreign refiner produces gasoline pursuant to the requirements of this Subpart H.

(5) On any occasion a foreign refiner bond is used to satisfy any judgment, the foreign refiner shall increase the bond to cover the amount used within 90 days of the date the bond is used.

(l) [Reserved]

(m) *English language reports.* Any report or other document submitted to EPA by an foreign refiner shall be in English language, or shall include an English language translation.

(n) *Prohibitions.* (1) No person may combine Certified Sulfur-FRGAS with any Non-Certified Sulfur-FRGAS or Non-Sulfur-FRGAS, and no person may combine Certified Sulfur-FRGAS with any Certified Sulfur-FRGAS produced at a different refinery, until the importer has met all the requirements of paragraph (o) of this section, except as provided in paragraph (e) of this section.

(2) No foreign refiner or other person may cause another person to commit an action prohibited in paragraph (n)(1) of this section, or that otherwise violates the requirements of this section.

(o) *United States importer requirements.* Any United States importer shall meet the following requirements:

(1) Each batch of imported gasoline shall be classified by the importer as being Sulfur-FRGAS or as Non-Sulfur-FRGAS, and each batch classified as Sulfur-FRGAS shall be further classified as Certified Sulfur-FRGAS or as Non-certified Sulfur-FRGAS.

(2) Gasoline shall be classified as Certified Sulfur-FRGAS or as Non-Certified Sulfur-FRGAS according to the designation by the foreign refiner if this designation is supported by product transfer documents prepared by the foreign refiner as required in paragraph (d) of this section, unless the gasoline is classified as Non-Certified Sulfur-FRGAS under paragraph (g) of this section.

(3) For each gasoline batch classified as Sulfur-FRGAS, any United States importer shall perform the following procedures:

(i) In the case of both Certified and Non-Certified Sulfur-FRGAS, have an independent third party:

(A) Determine the volume of gasoline in the vessel;

(B) Use the foreign refiner's Sulfur-FRGAS certification to determine the name and EPA-assigned registration

number of the foreign refinery that produced the Sulfur-FRGAS;

(C) Determine the name and country of registration of the vessel used to transport the Sulfur-FRGAS to the United States; and

(D) Determine the date and time the vessel arrives at the United States port of entry.

(ii) In the case of Certified Sulfur-FRGAS, have an independent third party:

(A) Collect a representative sample from each vessel compartment subsequent to the vessel's arrival at the United States port of entry and prior to off loading any gasoline from the vessel;

(B) Prepare a volume-weighted vessel composite sample from the compartment samples; and

(C) Determine the sulfur value using the methodologies specified in § 80.330, by:

(*1*) The third party analyzing the sample; or

(*2*) The third party observing the importer analyze the sample.

(4) Any importer shall submit reports within thirty days following the date any vessel transporting Sulfur-FRGAS arrives at the United States port of entry:

(i) To the Administrator containing the information determined under paragraph (o)(3) of this section; and

(ii) To the foreign refiner containing the information determined under paragraph (o)(3)(ii) of this section.

(5)(i) Any United States importer shall meet the requirements specified in § 80.195 for any imported gasoline that is not classified as Certified Sulfur-FRGAS under paragraph (o)(2) of this section.

(p) *Truck imports of Certified Sulfur-FRGAS produced at a small refinery.* (1) Any refiner whose Certified Sulfur-FRGAS is transported into the United States by truck may petition EPA to use alternative procedures to meet the following requirements:

(i) Certification under paragraph (d)(5) of this section;

(ii) Load port and port of entry sampling and testing under paragraphs (f) and (g) of this section;

(iii) Attest under paragraph (h) of this section; and

(iv) Importer testing under paragraph (o)(3) of this section.

(2) These alternative procedures must ensure Certified Sulfur-FRGAS remains segregated from Non-Certified Sulfur-FRGAS and from Non-Sulfur-FRGAS until it is imported into the United States. The petition will be evaluated based on whether it adequately addresses the following:

(i) Provisions for monitoring pipeline shipments, if applicable, from the refinery, that ensure segregation of Certified Sulfur-FRGAS from that refinery from all other gasoline;

(ii) Contracts with any terminals and/or pipelines that receive and/or transport Certified Sulfur-FRGAS, that prohibit the commingling of Certified Sulfur-FRGAS with any of the following:

(A) Other Certified Sulfur-FRGAS from other refineries;

(B) All Non-Certified Sulfur-FRGAS; or

(C) All Non-Sulfur-FRGAS;

(iii) Procedures for obtaining and reviewing truck loading records and United States import documents for Certified Sulfur-FRGAS to ensure that such gasoline is only loaded into trucks making deliveries to the United States; and

(iv) Attest procedures to be conducted annually by an independent third party that review loading records and import documents based on volume reconciliation, or other criteria, to confirm that all Certified Sulfur-FRGAS remains segregated throughout the distribution system and is only loaded into trucks for import into the United States.

(3) The petition required by this section must be submitted to EPA along with the application for small refiner status and individual refinery sulfur baseline and standards under § 80.240 and this section.

(q) *Withdrawal or suspension of a foreign refinery's baseline.* EPA may withdraw or suspend a baseline that has been assigned to a foreign refinery where:

(1) A foreign refiner fails to meet any requirement of this section;

(2) A foreign government fails to allow EPA inspections as provided in paragraph (i)(1) of this section;

(3) A foreign refiner asserts a claim of, or a right to claim, sovereign immunity in an action to enforce the requirements in this subpart H; or

(4) A foreign refiner fails to pay a civil or criminal penalty that is not satisfied using the foreign refiner bond specified in paragraph (k) of this section.

(r) *Early use of a foreign refinery baseline.* (1) A foreign refiner may begin using an individual refinery baseline before EPA has approved the baseline, provided that:

(i) A baseline petition has been submitted as required in paragraph (b) of this section;

(ii) EPA has made a provisional finding that the baseline petition is complete;

(iii) The foreign refiner has made the commitments required in paragraph (i) of this section;

(iv) The persons who will meet the independent third party and independent attest requirements for the foreign refinery have made the commitments required in paragraphs (f)(3)(iii) and (h)(7)(iii) of this section; and

(v) The foreign refiner has met the bond requirements of paragraph (k) of this section.

(2) In any case where a foreign refiner uses an individual refinery baseline before final approval under paragraph (r)(1) of this section, and the foreign refinery baseline values that ultimately are approved by EPA are more stringent than the early baseline values used by the foreign refiner, the foreign refiner shall recalculate its compliance, ab initio, using the baseline values approved by EPA, and the foreign refiner shall be liable for any resulting violation of the conventional gasoline requirements.

(s) *Additional requirements for petitions, reports and certificates.* Any petition for a refinery baseline under § 80.250 or § 80.295, any alternative procedures under paragraph (p) of this section, and any certification under paragraph (d)(3) of this section shall be:

(1) Submitted in accordance with procedures specified by the Administrator, including use of any forms that may be specified by the Administrator; and

(2) Be signed by the president or owner of the foreign refiner company, or by that person's immediate designee, and shall contain the following declaration:

I hereby certify: (1) that I have actual authority to sign on behalf of and to bind [insert name of foreign refiner] with regard to all statements contained herein; (2) that I am aware that the information contained herein is being certified, or submitted to the United States Environmental Protection Agency, under the requirements of 40 CFR. Part 80, subpart H, and that the information is material for determining compliance under these regulations; and (3) that I have read and understand the information being certified or submitted, and this information is true, complete and correct to the best of my knowledge and belief after I have taken reasonable and appropriate steps to verify the accuracy thereof.

I affirm that I have read and understand the provisions of 40 CFR Part 80, subpart H, including 40 CFR 80.410 [insert name of foreign refiner]. Pursuant to Clean Air Act section 113(c) and Title 18, United States Code, section 1001, the penalty for furnishing false, incomplete or misleading information in this certification or submission is a fine of up to $10,000, and/or imprisonment for up to five years.

[38 FR 1255, Jan. 10, 1973, as amended at 66 FR 19309, Apr. 13, 2001]

EFFECTIVE DATE NOTE: At 66 FR 19309, Apr. 13, 2001, § 80.410 was amended by revising paragraphs (d)(1), (d)(3)(ii), (f)(2)(ii) introductory text, and (s) introductory text, effective July 12, 2001. For the convenience of the user, the superseded text is set forth as follows.

§ 80.410 What are the additional requirements for gasoline produced at foreign refineries having individual small refiner sulfur baselines, foreign refineries granted temporary relief under § 80.270, or baselines for generating credits during 2000 through 2003?

* * * * *

(d) * * * (1) Any foreign refiner of a foreign refinery that has been assigned an individual sulfur baseline must designate each batch of Sulfur-FRGAS as such at the time the gasoline is produced, unless the refiner has elected to classify no gasoline exported to the United States as Sulfur-FRGAS under paragraph (c)(3)(i) of this section.

* * * * *

(3) * * *

(ii) The certification shall be made part of the product transfer documents for the Sulfur-FRGAS.

* * * * *

(f) * * *

(2) * * *

(ii) Prepare a volume-weighted vessel composite sample from the compartment samples, and determine the value for sulfur using the methodology specified in § 80.330 by:

* * * * *

(s) *Additional requirements for petitions, reports and certificates.* Any petition for a refinery baseline under § 80.250 or § 80.295, any alternative procedures under paragraph (r) of this section, any report or other submission required by paragraphs (c), (f)(2), or (i) of this section, and any certification under paragraph (d)(3) of this section shall be:

* * * * *

ATTEST ENGAGEMENTS

§ 80.415 What are the attest engagement requirements for gasoline sulfur compliance applicable to refiners and importers?

In addition to the requirements for attest engagements that apply to refiners and importers under §§ 80.125 through 80.130, and § 80.410, the attest engagements for importers and refiners must include the following procedures and requirements each year.

(a) *Baseline.* (1) Obtain the EPA sulfur baseline approval letter for the refinery to determine the refinery's applicable sulfur baseline and baseline volume under §§ 80.250 or 80.295.

(2) If the year being reviewed is 2004 through 2006 (2007 for refineries with small refiner status) and the refinery or importer produced or imported any GPA gasoline under § 80.216 or the refiner has approved status for a small refinery:

(i) Obtain the refinery's annual sulfur reports for 2000 through 2003; and

(ii) Determine whether the annual average sulfur level for any year credits were generated for 2000 through 2003 was less than the baseline level under paragraph (a)(1) of this section.

(3) If the annual average sulfur content for any year credits were created for 2000 through 2003 was less than the baseline level under paragraph (a)(1) of this section, report as a finding the lowest annual sulfur level as the new baseline value. For GPA gasoline add 30 ppm to obtain the GPA standard, not to exceed 150 ppm.

(4) If the refinery being reviewed is a small refinery and the annual volume under paragraph (b)(2) of this section is greater than the baseline volume, calculate the applicable standard in accordance with § 80.240(c).

(5) Obtain a written representation from the company representative stating the sulfur value that the company used as its baseline and agree that number to paragraphs (a)(1) through (a)(4) of this section and to the reports to EPA.

(b) *EPA reports.* (1) Obtain and read a copy of the refinery's or importer's annual sulfur reports filed with EPA for the year.

(2) Agree the yearly volume of gasoline reported to EPA in the sulfur reports with the inventory reconciliation analysis under § 80.128.

(3) For the years 2004 through 2006, calculate the annual volume and average sulfur level for gasoline classified as GPA gasoline under §§ 80.216 and 80.219, and calculate the annual volume and average sulfur level for gasoline not classified as GPA gasoline, and agree these values with the values reported to EPA.

(4) Except as provided in paragraph (b)(3) of this section, calculate the annual average sulfur level for all gasoline and agree that value with the value reported to EPA.

(5) Obtain and read a copy of the refinery's or importer's sulfur credit report.

(c) *Credit generation before 2004.* In the case of a refinery that only generates credits during 2000 through 2003:

(1) Obtain a written representation from the company representative stating the refinery produces gasoline from crude oil.

(2) Compute and report as a finding the sulfur baseline from paragraph (a) of this section multiplied by 0.9.

(3) Obtain the annual average sulfur level from paragraph (b)(4) of this section.

(4) If the sulfur value under paragraph (c)(3) of this section is less than

the sulfur value under paragraph (c)(2) of this section, compute and report as a finding the difference between the annual average sulfur level and the refinery's sulfur baseline from paragraph (a) of this section.

(5) Compute and report as a finding the total number of sulfur credits generated by multiplying the value in paragraph (c)(4) of this section by the volume of gasoline in paragraph (b)(2) of this section, and agree this value with the value reported to EPA.

(d) *Credit generation in 2004 and thereafter*. The following procedures shall be completed for a refinery or importer that generates credits in 2004 and thereafter:

(1) Obtain the annual average sulfur level for gasoline not classified as GPA from paragraph (b)(3) of this section.

(2) If the sulfur value under paragraph (d)(1) of this section is less than 30 ppm, compute and report as a finding the difference between the sulfur level under paragraph (d)(1) of this section and 30 ppm.

(3) Compute and report as a finding the total number of sulfur credits generated by multiplying the value calculated in paragraph (d)(2) of this section by the volume of gasoline not classified as GPA in paragraph (b)(3) of this section, and agree this number with the number reported to EPA.

(4) Obtain the annual average sulfur level for gasoline classified as GPA from paragraph (b)(3) of this section.

(5) If the sulfur value under paragraph (d)(4) of this section is less than the applicable level under § 80.310, compute and report as a finding the difference between the sulfur level under paragraph (d)(4) of this section and the appropriate level in § 80.310 .

(6) Compute and report as a finding the total number of sulfur credits generated by multiplying the value calculated in paragraph (d)(5) of this section by the volume of gasoline classified as GPA in paragraph (b)(3) of this section, and agree this number with the number reported to EPA.

(7) If the refiner has an approved status as a small refinery, obtain the annual average sulfur level for gasoline from paragraph (b)(4) of this section.

(8) If the sulfur value under paragraph (d)(7) of this section is less than the applicable standard under § 80.240, compute and report as a finding the difference between the sulfur level under paragraph (d)(7) of this section and the appropriate standard under § 80.240.

(9) Compute and report as a finding the total number of sulfur credits generated by multiplying the value calculated in paragraph (d)(8) of this section by the volume of gasoline in paragraph (b)(4) of this section, and agree this number with the number reported to EPA.

(e) *Credit purchases and sales*. The following attest procedures shall be completed for a refinery or importer that is a transferor or transferee of credits during an averaging period:

(1) Obtain contracts or other documents for all credits transferred to another refinery or importer during the year being reviewed; compute and report as a finding the number and year of creation of credits represented in these documents as being transferred away; and agree with the report to EPA.

(2) Obtain contracts or other documents for all credits received during the year being reviewed; compute and report as a finding the number and year of creation of credits represented in these documents as being received; and agree with the report to EPA.

(f) *Credits required for non-GPA gasoline*. The following attest procedures shall be completed for refineries and importers in 2005 and thereafter (2004 and thereafter for refineries having standards under § 80.240):

(1) Obtain the annual average sulfur level for gasoline not classified as GPA from paragraph (b)(3) of this section.

(2) If the value in paragraph (f)(1) of this section is greater than 30 ppm (or greater than the small refinery standard), compute and report as a finding the difference between 30 ppm (or the standard under § 80.240) and the value in paragraph (f)(1) of this section.

(3) Compute and report as a finding the total sulfur credits required by multiplying the value in paragraph (f)(2) of this section times the volume of gasoline not classified as GPA in paragraph (b)(3) of this section, and agree with the report to EPA.

(4) Obtain the refiner's or importer's representation as to the portion of the deficit under paragraph (f)(3) of this section that was resolved with credits, the portion that was resolved with allotments in 2005 only or that was carried forward as a deficit under § 80.205, and agree with the report to EPA (refineries subject to standards under § 80.240 cannot carry deficits forward).

(g) *Credits required for GPA gasoline.* The following attest procedures shall be completed in 2004 through 2006 for a refinery or importer that produces gasoline subject to the geographic phase-in area standards under § 80.216:

(1) Obtain the annual average sulfur level for the refinery's or importer's GPA gasoline from paragraph (b)(3) of this section.

(2) If the value in paragraph (g)(1) of this section is greater than the refinery's or importer's baseline plus 30 ppm under § 80.216, as determined in paragraph (a) of this section or 150 ppm, whichever is less, compute and report as a finding the difference between the annual average sulfur level and the baseline level plus 30 ppm, or 150 ppm, whichever is less.

(3) Compute and report as a finding the total sulfur credits and/or allotments required by multiplying the value in paragraph (g)(2) of this section times the volume of GPA gasoline from paragraph (b)(3) of this section.

(4) Obtain the refiner's or importer's representation as to the portion of the deficit under paragraph (g)(3) of this section that was resolved with credits, or the portion that was resolved with allotments in 2004 or 2005 only (compliance deficits for GPA gasoline cannot be carried forward.

(h) *Credit expiration.* The following attest procedures shall be completed for a refinery or importer that possesses credits during an averaging period:

(1) Obtain a list of all credits in the refiner's or importer's possession at any time during the year being reviewed, identified by the year of creation of the credits.

(2) If the year being reviewed is 2006 and thereafter, except in the case of gasoline produced for use in the GPA and gasoline produced by small refiners, determine whether any credits identified in paragraph (h)(1) of this section or Type A sulfur allotments created under paragraph (i) of this section and converted to credits were created before 2004, and if so, report as a finding this number of expired credits.

(3) If the year being reviewed is 2008 and thereafter, determine whether any credits identified in paragraph (h)(1) of this section or Type B sulfur allotments created under paragraph (i) of this section and converted to credits were created more than 5 years before the year being reviewed, and if so, report as a finding this number of expired credits (for example, unused credits created during the 2004 averaging period expire at the end of the 2009 averaging period).

(i) *Optional credit and allotment generation in 2003.* The following requirements apply to any refinery that generates credits and allotments in 2003 under § 80.275(a):

(1) Obtain a written representation from the company representative stating the refinery produces gasoline from crude oil.

(2) Obtain the refinery baseline value from paragraph (b)(1) of this section, the annual volume from paragraph (b)(2) of this section and the annual average sulfur level from paragraph (b)(4) of this section.

(3) Based on the annual sulfur level and refinery baseline, determine which equation under § 80.275(a)(2) applies.

(4) Using the applicable equations under § 80.275(a)(2), recalculate the sulfur allotments, by type, and credits and report as a finding.

(j) *Credit reconciliation.* The following attest procedures shall be completed each year credits were in the refiner's or importer's possession at any time during the year:

(1) Obtain the credits remaining or the credit deficit from the previous year from the refiner's or importer's report to EPA for the previous year.

(2) Compute and report as a finding the net credits remaining at the conclusion of the year being reviewed by totaling:

(i) Credits remaining from the previous year; plus

(ii) Credits generated under paragraphs (c), (d) and (i) of this section; plus

(iii) Allotments generated under paragraph (i) of this section which are converted to credits; plus

(iv) Credits purchased under paragraph (e) of this section; minus

(v) Credits sold under paragraph (e) of this section; minus

(vi) Credits used under paragraphs (f) and (g) of this section; minus

(vii) Credits expiring under paragraph (h) of this section; minus

(viii) Credit deficit from the previous year.

(3) Agree the credits remaining or the credit deficit at the conclusion of the year being reviewed with the report to EPA.

(4) If the refinery or importer had a credit deficit for both the previous year and the year being reviewed, report this fact as a finding.

(k) *Sulfur allotments in 2004 and 2005.* The following requirements apply to any refinery or importer that is subject to corporate pool average standards under § 80.195:

(1) *Corporate pool average.* (i) Obtain the annual average sulfur level for the refiner or importer from the sulfur report filed with EPA for all gasoline subject to corporate pool standards (all gasoline produced and imported, except that if 50% or greater of the gasoline volume was GPA gasoline the refiner or importer is not subject to the corporate pool average).

(ii) Compute and report as a finding the company's gasoline volume subject to corporate pool standards and average sulfur level for gasoline subject to corporate pool standards, and agree with the values reported to EPA.

(2) *Allotment generation.* (i) For 2004, if the corporate pool average is less than 120 ppm, compute and report as a finding the number and type of sulfur allotments generated in accordance with the applicable provisions under § 80.275(b).

(ii) For 2005, if the corporate pool average is less than 90 ppm, compute and report as a finding the number and type of sulfur allotments generated in accordance with the applicable provisions under § 80.275(b).

(iii) If the refiner or importer produced and imported 50% or more of its gasoline for GPA use in 2004 or 2005, no allotments can be generated in that year.

(3) *Allotment purchases and sales.* (i) Obtain contracts or other documents for all allotments transferred to another company during the year being reviewed; compute and report as a finding the number of allotments represented in these documents as being transferred away; and agree with the report to EPA.

(ii) Obtain contracts or other documents for all allotments received during the year being reviewed; compute and report as a finding the number of allotments represented in these documents as being received; and agree with the report to EPA.

(4) *Allotments required.* (i) For 2004, if the corporate pool average is greater than 120 ppm, compute and report as a finding the number of allotments required by multiplying the amount the corporate pool average is above 120 ppm times the corporate pool volume, and agree with the report to EPA.

(ii) For 2005, if the corporate pool average is greater than 90 ppm, compute and report as a finding the number of allotments required by multiplying the amount the corporate pool average is above 90 ppm times the corporate pool volume, and agree with the report to EPA.

(iii) Obtain the number of allotments used to meet standards for GPA gasoline determined in paragraph (g) of this section.

(5) *Allotment reconciliation.* (i) Compute and report as a finding the net allotments remaining at the conclusion of the year being reviewed by totaling allotments:

(A) Generated under paragraphs (i)(4) and (k)(2) of this section; plus

(B) Purchased under paragraph (k)(3) of this section; minus

(C) Sold under paragraph (k)(3) of this section; minus

(D) Used under paragraph (k)(4) of this section for demonstrating compliance with the corporate pool average.

(ii) Report as a finding any allotments generated in 2003 or 2004 that are used to meet the corporate pool standards in 2005 that were not reduced to 50% of their original value.

(iii) If the company's net allotments remaining are less than zero, report this fact as a finding.

Subpart I—Motor Vehicle Diesel Fuel

SOURCE: 66 FR 5136, Jan. 18, 2001, unless otherwise noted.

GENERAL INFORMATION

§ 80.500 What are the implementation dates for the diesel fuel sulfur control program?

The implementation dates for standards for motor vehicle diesel fuel and diesel fuel additives, and for other provisions of this subpart, are as follows:

(a) *Implementation date for standards applicable to production or importation of motor vehicle diesel fuel, and to motor vehicle diesel fuel additives.* Except as provided in paragraph (d) of this section, beginning June 1, 2006:

(1) The standards and requirements under § 80.520(a) and (b) shall apply to any motor vehicle diesel fuel produced or imported by any refiner or importer; and

(2) The standards and requirements under § 80.521 shall apply to any motor vehicle diesel fuel additive.

(b) *Implementation date for standards applicable to motor vehicle diesel fuel downstream of the refinery or importer.* Except as provided in paragraphs (c) and (d) of this section, beginning July 15, 2006, the standards and requirements under § 80.520(a) and (b) shall apply to any motor vehicle diesel fuel at any downstream location.

(c) *Implementation date for standards applicable to motor vehicle diesel fuel at retail outlets and wholesale purchaser-consumer facilities.* Except as provided in paragraph (d) of this section, beginning September 1, 2006, the standards and requirements under § 80.520(a) and (b) shall apply to any motor vehicle diesel fuel at any retail outlet or wholesale purchaser-consumer facility.

(d) *Implementation date for motor vehicle diesel fuel subject to the 500 ppm sulfur content standard in § 80.520(c).* (1) Beginning June 1, 2006, the sulfur content standard of § 80.520(c) shall apply to motor vehicle diesel fuel, but only where authorized under, and subject to, an applicable provision of this Subpart.

(2) Beginning June 1, 2010, the sulfur content standard of § 80.520(c) shall no longer apply to any motor vehicle diesel fuel produced or imported by any refiner or importer.

(3) Beginning October 1, 2010, the sulfur content standard of § 80.520(c) shall no longer apply to any motor vehicle diesel fuel at any downstream location other than a retail or wholesale purchaser-consumer facility.

(4) Beginning December 1, 2010, the sulfur content standard of § 80.520(c) shall no longer apply to any motor vehicle diesel fuel.

(e) *Other provisions.* All other provisions of this subpart apply beginning June 1, 2006, unless another date is specified.

(f) For purposes of this subpart, the term ''downstream location'' shall mean any point in the diesel fuel distribution system downstream from refineries and import facilities, including diesel fuel at facilities of distributors, carriers, retailers, kerosene blenders, and wholesale purchaser-consumers.

§ 80.501 What diesel fuel is subject to the provisions of this subpart?

(a) *Included fuel and additives.* The provisions of this subpart apply to motor vehicle diesel fuel as defined in § 80.2(y), motor vehicle diesel fuel additives as defined in § 80.2(xx), and motor oil that is used as or intended for use as fuel in diesel motor vehicles or is blended with diesel fuel for use in diesel motor vehicles at any downstream location, as provided in § 80.500(f).

(b) *Excluded fuel.* The provisions of this subpart do not apply to motor vehicle diesel fuel that is designated for export outside the United States, and identified for export by a transfer document as required under § 80.590.

§§ 80.502–80.519 [Reserved]

MOTOR VEHICLE DIESEL FUEL STANDARDS AND REQUIREMENTS

§ 80.520 What are the standards and dye requirements for motor vehicle diesel fuel?

(a) *Standards.* All motor vehicle diesel fuel is subject to the following per-gallon standards:

(1) *Sulfur content.* 15 parts per million (ppm) maximum, except as provided in paragraph (c) of this section;

(2) *Cetane index and aromatic content.* (i) A minimum cetane index of 40; or

(ii) A maximum aromatic content of 35 volume percent.

(b) *Dye requirements.* (1) All motor vehicle diesel fuel shall be free of visible evidence of dye solvent red 164 (which has a characteristic red color in diesel fuel), except for motor vehicle diesel fuel that is used in a manner that is tax exempt under section 4082 of the Internal Revenue Code.

(2) Any diesel fuel that does not show visible evidence of dye solvent red 164 shall be considered to be motor vehicle diesel fuel and subject to all the requirements of this subpart for motor vehicle diesel fuel, except for diesel fuel designated or classified for use only in:

(i) The State of Alaska as provided under 40 CFR 69.51; or

(ii) Jet aircraft, a research and development testing program exempted under 80.600, or motor vehicles covered by an exemption under § 80.602.

(c) Pursuant and subject to the provisions of §§ 80.530–80.532, 80.552(a), 80.560–80.561, and 80.620, only motor vehicle diesel fuel produced or imported in full compliance with the requirements of those provisions is subject to the following per-gallon standard for sulfur content: 500 ppm maximum.

(d) Kerosene and any other distillate product, that meets the definition of motor vehicle diesel fuel, is subject to the standards and requirements under this section.

§ 80.521 What are the standards and identification requirements for motor vehicle diesel fuel additives?

(a) Except as provided in paragraph (b) of this section, any motor vehicle diesel fuel additive that is added, intended for adding, used, or offered for use in motor vehicle diesel fuel subject to the 15 ppm sulfur content standard, at any downstream location must:

(1) Have a sulfur content not exceeding 15 ppm; and

(2) Be accompanied a product transfer document pursuant to § 80.591 indicating that the additive complies with the 15 ppm standard for motor vehicle diesel fuel, except for those diesel fuel additives which are only sold in containers for use by the ultimate consumer of motor vehicle diesel fuel and which are subject to the requirements of § 80.591(d).

(b) Any motor vehicle diesel fuel additive that is added, intended for adding, used, or offered for use in motor vehicle diesel fuel subject to the 15 ppm sulfur content standard may have a sulfur content exceeding 15 ppm provided that:

(1) The additive is added or used in the motor vehicle diesel fuel in a quantity less than 1% by volume of the resultant additive/diesel fuel mixture;

(2) The product transfer document pursuant to § 80.591 indicates that the additive may exceed the 15 ppm sulfur standard, that improper use of the additive may result in non-complying fuel, and that the additive complies with the sulfur information requirements of § 80.591(b)(3); and

(3) The additive is not used or intended for use by an ultimate consumer in diesel motor vehicles.

§ 80.522 May used motor oil be dispensed into diesel motor vehicles?

No person may introduce used motor oil, or used motor oil blended with diesel fuel, into the fuel system of model year 2007 or later diesel motor vehicles, unless both of the following requirements have been met:

(a) The vehicle or engine manufacturer has received a Certificate of Conformity under 40 CFR Part 86 and the certification of the vehicle or engine configuration is explicitly based on emissions data with the addition of motor oil; and

(b) The oil is added in a manner and rate consistent with the conditions of the Certificate of Conformity.

§ 80.523 What diesel fuel designation requirements apply to refiners and importers?

Any refiner or importer shall accurately and clearly designate all fuel it produces or imports for use in diesel motor vehicles as either motor vehicle diesel fuel meeting the 15 ppm sulfur standard under § 80.520(a)(1) or as motor vehicle diesel fuel meeting the 500 ppm sulfur standard under § 80.520(c).

§ 80.524 What sulfur content standard applies to motor vehicle diesel fuel downstream of the refinery or importer?

(a) Except as provided in paragraph (b) of this section or otherwise in the provisions of this Subpart I, the 15 ppm sulfur content standard of § 80.520(a) shall apply to all motor vehicle diesel fuel at any downstream location.

(b) Prior to the October 1, 2010 and December 1, 2010 dates specified in § 80.500(d)(3) and (4), the 500 ppm sulfur content standard of § 80.520(c) shall apply to motor vehicle diesel fuel at any downstream location, provided the following conditions are met:

(1) The product transfer documents comply with the requirements of § 80.590, including indicating that the fuel complies with the 500 ppm sulfur standard for motor vehicle diesel fuel and is for use only in model year 2006 and older diesel motor vehicles, or the fuel is downgraded pursuant to the provision of § 80.527 to motor vehicle diesel fuel subject to the 500 ppm sulfur standard;

(2) The motor vehicle diesel fuel is not represented or intended for sale or use as subject to the 15 ppm sulfur content standard, and is not dispensed, or intended to be dispensed, into model year 2007 and later motor vehicles by a retailer or wholesale purchaser-consumer; and

(3) For retailers or wholesale purchaser-consumers, the pump labeling requirements of § 80.570(a) are satisfied.

§ 80.525 What requirements apply to kerosene blenders?

(a) For purposes of this subpart, a kerosene blender means any refiner who produces motor vehicle diesel fuel by adding kerosene to motor vehicle diesel fuel downstream of the refinery that produced the motor vehicle diesel fuel or of the import facility where the motor vehicle diesel fuel was imported, without altering the quality or quantity of the motor vehicle diesel fuel in any other manner.

(b) Kerosene blenders are not subject to the requirements of this subpart applicable to refiners of motor vehicle diesel fuel, but are subject to the requirements and prohibitions applicable to downstream parties.

(c) For purposes of compliance with § 80.524(b)(1), the product transfer documents must indicate that the fuel to which kerosene is added complies with the 500 ppm sulfur standard for motor vehicle diesel fuel and is for use only in model year 2006 and older diesel motor vehicles, or the fuel is properly downgraded pursuant to the provisions of § 80.527 to motor vehicle diesel fuel subject to the 500 ppm sulfur standard.

(d) Kerosene that a kerosene blender adds or intends to add to motor vehicle diesel fuel subject to the 15 ppm sulfur content standard must meet the 15 ppm sulfur content standard, and the following requirements:

(1) The product transfer document received by the kerosene blender indicates that the kerosene is motor vehicle diesel fuel that complies with the 15 ppm sulfur content standard; or

(2) The kerosene blender has test results indicating the kerosene complies with the 15 ppm sulfur standard.

§ 80.526 [Reserved]

§ 80.527 Under what conditions may motor vehicle diesel fuel subject to the 15 ppm sulfur standard be downgraded as motor vehicle diesel fuel subject to the 500 ppm sulfur standard?

(a) *Definition.* As used in this section, *downgrade* means changing the classification of motor vehicle diesel fuel subject to the 15 ppm sulfur standard under § 80.520(a)(1) to motor vehicle diesel fuel subject to the 500 ppm sulfur standard under § 80.520(c). A *downgrade* occurs when the change in classification takes place. Changing the classification of motor vehicle diesel fuel subject to the 15 ppm sulfur standard under § 80.520(a)(1) to any fuel that is not motor vehicle diesel fuel is not a *downgrade* for purposes of this section and is not limited by the provisions of this section.

(b) *Who may downgrade.* Any person in the motor vehicle diesel fuel distribution system who has custody or title to motor vehicle diesel fuel may downgrade it.

(c) *Downgrading limitation.* (1) Except as provided in paragraphs (d) and (e) of this section, a person described in paragraph (c)(4) of this section may not downgrade a total of more than 20% of

the motor vehicle diesel fuel (by volume) that is subject to the 15 ppm sulfur standard of § 80.520(a)(1) while such person has title to or custody of such fuel. In addition, a refiner or importer may only downgrade (subject to the 20% limit) motor vehicle diesel fuel designated under § 80.523 as subject to 15 ppm sulfur standard under § 80.520(a)(1) after it has been so designated and after it has been moved from the refinery's, or import facility's, storage tank or other vessel where the diesel fuel batch was designated as subject to the sulfur standard of § 80.520(a) under § 80.523.

(2) The limitation of paragraph (c)(1) of this section applies separately to each person who has custody or title of the fuel when it is downgraded.

(3) Compliance with the limitation of paragraph (c)(1) of this section shall be on an annual, calendar year basis (except in 2006 compliance shall be for the period June 1, 2006 through December 31, 2006, and in 2010 compliance shall be for the period January 1 through May 31).

(4) The limitation of this section applies to persons who sell, offer for sale, dispense, supply, store or transport diesel fuel. The limitation does not apply to persons who are transferred custody or title to motor vehicle diesel fuel when it is dispensed into motor vehicles at retail outlets.

(d) *Diesel fuel in violation of the 15 ppm standard.* Where motor vehicle diesel fuel subject to the sulfur standard of § 80.520(a)(1) is found to be in violation of any standard under § 80.520(a) and is consequently downgraded, the person, or persons, having custody and title to the fuel at the time it is found to be in violation must include the volume of such fuel toward its 20% volume limitation under paragraph (c)(1) of this section, unless the person, or persons, demonstrates that it did not cause the violation.

(e) *Special provisions for retail outlets and wholesale purchaser-consumer facilities.* Notwithstanding the provisions of paragraph (c)(1) of this section, retailers and wholesale purchaser-consumers shall comply with the downgrading limitation as follows:

(1) Retailers and wholesale purchaser-consumers who sell, offer for sale, or dispense motor vehicle diesel fuel that is subject to the 15 ppm sulfur standard under § 80.520(a)(1) are exempt from the volume limitations of paragraph (c)(1) of this section.

(2) A retailer or wholesale purchaser-consumer who does not sell, offer for sale, or dispense motor vehicle diesel fuel subject to the 15 ppm sulfur standard under § 80.520(a)(1) may not downgrade a volume of motor vehicle diesel fuel classified as subject to the 15 ppm sulfur standard greater than 20% of the total volume of motor vehicle diesel fuel that it sells, offers for sale, or dispenses annually.

(f) *Product transfer documents.* If the custody or title to any motor vehicle diesel fuel that is downgraded under this section is transferred, the product transfer documents under § 80.590 for such fuel must reflect the change in classification to motor vehicle diesel fuel subject to the 500 ppm sulfur standard.

(g) *Recordkeeping requirement.* Any person subject to the provisions of this section, as described in paragraph (c)(4) of this section, who downgrades any motor vehicle diesel fuel previously classified as subject to the 15 ppm sulfur standard under § 80.520(a)(1) during any calendar year, must make and maintain records sufficient to show compliance with the requirements and limitations of this section.

(h) *Termination of downgrading limitations.* The provisions of this section shall not apply after May 31, 2010.

§§ 80.528–80.529 [Reserved]

TEMPORARY COMPLIANCE OPTION

§ 80.530 Under what conditions can 500 ppm motor vehicle diesel fuel be produced or imported?

(a) Beginning June 1, 2006, a refiner or importer may produce or import motor vehicle diesel fuel subject to the 500 ppm sulfur content standard of § 80.520(c) if all of the following requirements are met:

(1) Each batch of motor vehicle diesel fuel subject to the 500 ppm sulfur content standard must be designated by the refiner or importer as subject to such standard, pursuant to § 80.523.

(2) The refiner or importer must meet the requirements for product transfer

documents in § 80.590 for each batch subject to the 500 ppm sulfur content standard.

(3)(i) The volume V_{500} of diesel fuel that is produced or imported during a compliance period, as provided in paragraph (a)(5) of this section, may not exceed the following volume limit:

(A) For compliance periods prior to 2010, 20% of the volume V_t of diesel fuel that is produced or imported during a compliance period plus an additional volume of motor vehicle diesel fuel represented by credits properly generated and used pursuant to the requirements of §§ 80.531 and 80.532.

(B) For the compliance period of January 1, 2010 through May 31, 2010, the volume of motor vehicle diesel fuel represented by credits properly generated and used pursuant to the requirements of §§ 80.531 and 80.532.

(ii) The terms V_{500} and V_t have the meaning specified in § 80.531(a)(2).

(4) Compliance with the volume limit in paragraph (a)(3) of this section must be determined separately for each refinery. For an importer, such compliance must be determined separately for each Credit Trading Area (as defined in § 80.531) into which motor vehicle diesel fuel is imported. If a party is both a refiner and an importer, such compliance shall be determined separately for the refining and importation activities.

(5) Compliance with the volume limit in paragraph (a)(3) of this section shall be determined on a calendar year basis, where the calendar year period is from January 1st through December 31st. For the year 2006, compliance shall be determined for the period June 1, 2006 through December 31, 2006. For the year 2010, compliance shall be determined for the period of January 1, 2010 through May 31, 2010.

(6) Any motor vehicle diesel fuel produced or imported above the volume limit in paragraph (a)(3) of this section shall be subject to the 15 ppm sulfur content standard. However, for any compliance period prior to and including 2009, a refiner or importer may exceed the volume limit in paragraph (a)(3) of this section by no more than 5 percent of the volume V_t of diesel fuel produced or imported during the compliance period, provided that for the immediately following calendar year:

(i) The refiner or importer complies with the volume limit in paragraph (a)(3) of this section; and

(ii) The refiner or importer produces or imports a volume of motor vehicle diesel fuel subject to the 15 ppm sulfur standard, or obtains credits properly generated and used pursuant to the requirements of §§ 80.531 and 80.532 that represent a volume of motor vehicle diesel fuel, equal to the volume of the exceedence for the prior compliance period.

(b) After May 31, 2010, no refiner or importer may produce or import motor vehicle diesel fuel subject to the 500 ppm sulfur content standard pursuant to this section.

§ 80.531 How are motor vehicle diesel fuel credits generated?

(a) *Generation of credits from June 1, 2006 through December 31, 2009.* (1) A refiner or importer may generate credits during the period June 1, 2006 through December 31, 2009, for motor vehicle diesel fuel produced or imported that is designated as subject to the 15 ppm sulfur content standard under § 80.520(a)(1). Credits may be generated only if the volume of motor vehicle diesel fuel designated under § 80.523 as subject to the 15 ppm sulfur standard of § 80.520(a) exceeds 80% of the total volume of diesel fuel produced or imported as described in paragraph (a)(2) of this section.

(2) The number of credits generated shall be calculated for each compliance period (as specified in § 80.530(a)(5)) as follows:

$$C = V_{15} - (0.80 \times V_t)$$

Where:

C = the positive number of credits generated, in gallons.

V_{15} = the total volume in gallons of motor vehicle diesel fuel produced or imported that is designated under § 80.523 as subject to the standards of § 80.520(a) during the compliance period.

V_{500} = the total volume in gallons of motor vehicle diesel fuel produced or imported that is designated under § 80.523 as subject to the 500 ppm sulfur standard under § 80.520(c) plus the total volume of any other diesel fuel (not including V_{15}, or diesel fuel that is dyed in accordance with § 80.520(b) at the refinery or import facility where the diesel fuel is produced or imported) represented as having a sulfur content not exceeding 500 ppm.

$V_t = V_{15} + V_{500}$.

(3) Credits shall be generated and designated as follows:

(i) Credits shall be generated separately for each refinery of a refiner.

(ii) Credits shall be generated separately for each credit trading area (CTA), as defined in paragraph (a)(5) of this section, into which motor vehicle diesel fuel is imported by an importer.

(iii) Credits shall be designated separately by year of generation and by CTA of generation. In the case of a refiner, credits shall also be designated by refinery, and in the case of an importer, credits shall also be designated by port of import.

(iv) Credits may not be generated by both a foreign refiner and by an importer for the same motor vehicle diesel fuel.

(4) Credits shall be generated by a foreign refiner as provided in § 80.620(c) and this section.

(5) For purposes of this subpart, the CTAs are:

(i) PADDs 1, 2, 3 and 4, as described in § 80.41(r), except as provided in paragraph (a)(5)(iv) of this section. The CTAs shall be designated as CTA 1, 2, 3, and 4, respectively, and correspond to PADD 1, 2, 3, and 4, respectively;

(ii) CTA 5 shall correspond to PADD 5, as described in § 80.41(r), except as provided in paragraphs (a)(5)(iii) and (iv) of this section;

(iii) The states of Hawaii and Alaska shall each be treated as a separate CTA and not a part of CTA 5. Alaska shall be CTA 6. Hawaii shall be CTA 7;

(iv) If any state (through a waiver of federal preemption under Section 211(c)(4) of the Clean Air Act, 42 U.S.C. 7545(c)(4)) implements a law or regulation that requires a greater volume of motor vehicle diesel fuel to meet a sulfur standard of less than or equal to 15 ppm than the volume that is required under this subpart, no motor vehicle diesel fuel produced in that state or imported directly into that state may generate credits under this subpart, effective on the implementation date of the sulfur program under the state statute or regulation that implements the more stringent state requirements.

(6) No credits may be generated under this paragraph (a) after December 31, 2009.

(7) No refinery may generate credits under both this paragraph (a) and under paragraph (e) of this section.

(b) *Generation of early credits from June 1, 2001 through May 31, 2005.* (1) Beginning June 1, 2001, a refiner or importer may generate one credit for each gallon of motor vehicle diesel fuel meeting the sulfur content standard in § 80.520(a)(1) that is used in vehicles with engines that are certified to meet the model year 2007 heavy duty engine PM standard under 40 CFR 86.007–11, or vehicles with retrofit technologies that achieve emission levels equivalent to the 2007 NO_X or PM emission standard verified as part of a retrofit program administered by EPA or a state. Such refiners and importers must comply with the requirements of paragraphs (b) and (d) of this section.

(2)(i) Any refiner or importer planning to generate credits under this paragraph must provide notice of intent to generate early credits at least 120 calendar days prior to the date it begins generating credits under this paragraph by submitting such notice to Attn: Early Diesel Credits Notice, at the address in § 80.595.

(ii) The notice shall include a detailed plan that demonstrates that the motor vehicle diesel fuel meeting the 15 ppm sulfur standard of § 80.520(a)(1) for which credits are generated under this paragraph will be used in vehicles with engines that are certified to meet the model year 2007 heavy duty engine PM standard under 40 CFR 86.007–11 or in vehicles with retrofit technologies that achieve emission levels equivalent to the 2007 NO_X or PM emission standard verified as part of a retrofit program administered by EPA or a state. The notice must include the refiner's or importer's detailed plan for ensuring that all motor vehicle diesel fuel that generates early credits under this paragraph will be segregated from all other motor vehicle diesel fuel not meeting the sulfur standard under § 80.520(a)(1), from the refinery or import facility to its ultimate use in motor vehicles.

(3) No credits may be generated under this paragraph (b) after May 31, 2005.

(4) A refiner or importer may generate credits under this paragraph and also generate credits under paragraph

(a) of this section, and a small refiner, as defined under § 80.550, may generate credits under this paragraph (b) and paragraph (e) of this section.

(c) *Generation of early credits from June 1, 2005 through May 31, 2006.* (1) Beginning June 1, 2005, a refiner or importer may generate one credit for each gallon of motor vehicle diesel fuel that is dispensed at retail outlets or at wholesale-purchaser consumer facilities exclusively as motor vehicle diesel fuel meeting the 15 ppm sulfur standard in § 80.520(a)(1). Such refiners and importers must comply with the requirements of this paragraph (c) and paragraph (d) of this section.

(2)(i) Any refiner or importer planning to generate credits under this paragraph must provide notice of intent to generate early credits at least 120 calendar days prior to the date it begins generating credits under this paragraph (c).

(ii) The notice shall include a detailed plan that demonstrates that the motor vehicle diesel fuel meeting the sulfur standard under § 80.520(a)(1) will be dispensed exclusively at retail outlets or at wholesale-purchaser consumer facilities as 15 ppm sulfur content motor vehicle diesel fuel. The plan must demonstrate that the refiner or importer will assure that all motor vehicle diesel fuel that generates early credits under this paragraph (c) will be segregated from all other motor vehicle diesel fuel from the refinery or import facility to its ultimate use in motor vehicles.

(3) No credits may be generated under this paragraph after May 31, 2006.

(4) A refiner or importer may generate credits under this paragraph (c) and also generate credits under paragraph (a) of this section, and a small refiner, as defined under § 80.550, may generate credits under this paragraph (c) and paragraph (e) of this section.

(d) *Additional requirements for early credits.* Early credits generated under paragraphs (b) and (c) of this section are subject to the following additional requirements:

(1) The designation requirements of § 80.523, and all recordkeeping and annual reporting requirements of §§ 80.592, 80.593 and 80.594.

(2) Credits generated under paragraphs (b) and (c) of this section shall be generated separately by CTA as defined in paragraph (a)(5) of this section and must be designated by CTA of generation, and by the refiner and refinery, or by importer and port of import, as applicable.

(3) Credits may not be generated for the same fuel by both a foreign refiner and an importer.

(4) The plan under paragraph (b)(2)(ii) or (c)(2)(ii) of this section must include provisions to include information on product transfer documents and on pump stands dispensing the fuel identifying the fuel as 15 ppm sulfur content motor vehicle diesel fuel. The plan must also identify the specific retail outlets or wholesale purchaser-consumer facilities that the fuel will be provided to. The Administrator may require a refiner or importer to submit additional information, as needed.

(5) In addition to the reporting requirements under paragraph (d)(1) of this section, the refiner or importer must submit a report to the Administrator no later than the last day of February for the prior calendar year period (or for the period June 1, 2001 through December 31, 2001, the period June 1, 2005 through December 31, 2005, or the period January 1, 2006 through May 31, 2006, as applicable) demonstrating that all the motor vehicle diesel fuel produced or imported for which credits were generated met the applicable requirements of paragraph (b), (c), or (d)(4) of this section. If the Administrator finds that such credits did not in fact meet the requirements of paragraphs (b)(1) and (c)(1) of this section, as applicable, or if the Administrator determines that there is insufficient information to determine the validity of such credits, the Administrator may deny the credits submitted in whole or in part.

(e) *Credits generated by small refiners.* (1) Notwithstanding the provisions of paragraph (a) of this section, a small refiner that is approved by the EPA as a small refiner under § 80.551(g) may generate credits under § 80.552(b). Such a small refiner may generate one credit for each gallon of motor vehicle diesel fuel produced that is designated under

§ 80.523 as subject to the 15 ppm sulfur standard under § 80.520(a)(1).

(2)(i) Credits may be generated under this paragraph (e) and § 80.552(b) only during the compliance periods beginning June 1, 2006 and ending on May 31, 2010. Credits shall be designated separately by refinery, separately by CTA of generation, and separately by annual compliance period. The annual compliance period for 2006 shall be June 1, 2006 through December 31, 2006. The annual compliance period for 2010 shall be January 1, 2010 through May 31, 2010.

(ii) The small refiner must meet the requirements of paragraphs (d)(1), (d)(2) and (d)(3) of this section, and the recordkeeping and reporting requirements of §§ 80.592, 80.593 and 80.594.

(iii) In addition, a foreign refiner that is approved by the Administrator to generate credits under § 80.552(b) shall comply with the requirements of § 80.620.

§ 80.532 How are credits used and transferred?

(a) *Credit use.* Credits generated under § 80.531 may be used to meet the volume limit of § 80.530(a)(3) provided that:

(1) The credits were generated and reported according to the requirements of this subpart; and

(2) The requirements of paragraphs (b), (c), (d), and (e) of this section are met.

(b) Credits generated under § 80.531 may be used by a refinery or by an importer to comply with section 80.530 by applying one credit for every gallon of motor vehicle diesel fuel needed to meet compliance with the volume limit of § 80.530(a)(3).

(c) Credits generated may be banked for use or transfer in a later compliance period or may be transferred to another refinery or importer for use as provided in paragraph (d) of this section.

(d) *Credit transfers.* (1) Credits obtained from another refinery or from another importer, including early credits and small refiner credits as described in § 80.531 (b), (c) (d), and (e), may be used to satisfy the volume limit of § 80.530(a)(3) if all the following conditions are met:

(i) The credits were generated in the same CTA as the CTA in which credits are used to achieve compliance;

(ii) The credits are used in compliance with the time period limitations for credit use in this subpart;

(iii) Any credit transfer takes place no later than the last day of February following the compliance period when the credits are used;

(iv) No credit may be transferred more than twice, as follows: The first transfer by the refiner or importer who generated the credit may only be made to a refiner or importer who intends to use the credit; if the transferee cannot use the credit, it may make a second and final transfer only to a refiner or importer who intends to use the credit. In no case may a credit be transferred more than twice before being used or terminated;

(v) The credit transferor must apply any credits necessary to meet the transferor's annual compliance requirements before transferring credits to any other refinery or importer;

(vi) No credits may be transferred that would result in the transferor having a negative credit balance; and

(vii) Each transferor must supply to the transferee records indicating the year the credits were generated, the identity of the refiner (and refinery) or importer who generated the credits, the CTA of credit generation, and the identity of the transferring party, if it is not the same party who generated the credits.

(2) In the case of credits that have been calculated or created improperly, or are otherwise determined to be invalid, the following provisions apply:

(i) Invalid credits cannot be used to achieve compliance with the transferee's volume requirements regardless of the transferee's good faith belief that the credits were valid.

(ii) The refiner or importer who used the credits, and any transferor of the credits, must adjust their credit records, reports and compliance calculations as necessary to reflect the proper credits.

(iii) Any properly created credits existing in the transferor's credit balance after correcting the credit balance, and after the transferor applies credits as

needed to meet the compliance requirements at the end of the compliance period, must first be applied to correct the invalid transfers before the transferor trades or banks the credits.

(e) *Limitations on credit use.* (1) Credits may not be used to achieve compliance with any requirements of this subpart other than the volume limit of § 80.530(a)(3), unless specifically approved by the Administrator pursuant to a hardship relief petition under § 80.560 or § 80.561.

(2) A refiner or importer possessing credits must use all credits in its possession prior to applying the credit deficit provisions of § 80.530(a)(6).

(3) No credits may be used to meet compliance with this subpart subsequent to the compliance period ending May 31, 2010.

§§ 80.533–80.539 [Reserved]

GEOGRAPHIC PHASE-IN PROVISIONS

§ 80.540 How may a refiner be approved to produce gasoline under the GPA gasoline sulfur standards in 2007 and 2008?

(a) A refiner that has been approved by EPA under § 80.217 for the geographic phase-in area (GPA) gasoline sulfur content standards under § 80.216 may apply to EPA for approval to produce gasoline subject to the GPA standards in 2007 and 2008. Such application shall be submitted to EPA, at the address provided in § 80.595(b), by December 31, 2001. A foreign refiner must apply under the provisions of paragraph (n) of this section.

(b) The refiner must submit an application in accordance with the provisions of §§ 80.595 and 80.596. The application must also include information, as provided in § 80.594(c), demonstrating that starting no later than June 1, 2006, all motor vehicle diesel fuel produced by the refinery for United States use will comply with the 15 ppm sulfur content standard under § 80.520(a)(1), and that the volume of motor vehicle diesel fuel produced will comply with the volume requirements of paragraph (e) of this section.

(c) The Administrator may approve a refiner's application to produce gasoline subject to the GPA gasoline sulfur content standards in 2007 and 2008 if the provisions of paragraph (b) of this section are satisfied. In approving an application, the Administrator shall establish a motor vehicle diesel fuel volume baseline under §§ 80.595 and 80.596.

(d) Starting June 1, 2006, and continuing through December 31, 2008, all motor vehicle diesel fuel produced by a refiner that has been approved under paragraph (c) of this section to produce gasoline subject to the GPA gasoline sulfur content standards in 2007 and 2008, must be accurately designated under § 80.523 as meeting the 15 ppm sulfur content standard of § 80.520(a)(1).

(e) The total volume of motor vehicle diesel fuel produced for use in the United States and designated as meeting the 15 ppm sulfur content standard under paragraph (d) of this section must meet or exceed 85% of the baseline volume established under paragraph (c) of this section, except that for the year 2006, the total volume must meet or exceed 50% of the baseline volume.

(f) Compliance with the volume requirements in paragraph (e) of this section shall be determined on a calendar year basis, except that for the year 2006 compliance shall be determined for the period June 1, 2006 through December 31, 2006.

(g) If a refiner fails to comply with the requirements of paragraph (d) of this section, or if the approval of the application, including the baseline, was based on false or inaccurate information, the approval to produce gasoline subject to the GPA gasoline sulfur content standards under this section during the years 2007 and 2008 shall be void ab initio, and gasoline produced for use in the GPA must meet the gasoline sulfur content standards of subpart H of this Part as if there had been no approval to produce gasoline subject to the GPA gasoline sulfur content standards in 2007 and 2008.

(h) If for any compliance period a refiner fails to meet the volume requirements in paragraph (e) of this section, the approval to produce gasoline subject to the GPA gasoline sulfur content standards shall be void for that compliance period and for all succeeding compliance periods, and gasoline produced for use in the GPA must meet the gasoline sulfur standards under subpart H

of this subpart as if there had been no approval to produce gasoline subject to the GPA gasoline sulfur content standards under this section in 2007 and 2008.

(i) A refiner that is approved for production of gasoline subject to the GPA gasoline sulfur standards under this section in 2007 and 2008 must meet all applicable recordkeeping and reporting requirements of §§ 80.592, 80.593, and 80.594, and shall meet all the recordkeeping and reporting requirements under §§ 80.219, 80.365 and 80.370.

(j) A refiner approved to produce gasoline subject to the GPA gasoline sulfur standards under this section in 2007 and 2008 may not generate or use credits under § 80.531(a) or (e), or § 80.532 unless the approval is vacated as provided in paragraph (k) of this section.

(k) A refiner may petition the Administrator to vacate approval to produce gasoline subject to the GPA gasoline sulfur content standards in 2007 and 2008. EPA may grant such a petition, effective January 1 of the compliance period following EPA's receipt of such petition (or effective June 1, in 2006, if applicable). Upon such effective date and thereafter, gasoline produced for use in the GPA must meet the gasoline sulfur content standards under subpart H of this Part as if there had been no approval to produce gasoline subject to the GPA gasoline sulfur content standards under this section in 2007 and 2008. Upon such effective date, the refiner shall not be subject to the requirements of this section.

(l) The provisions of this section shall apply separately for each refinery of a refiner.

(m) If any refinery is approved for production of gasoline subject to GPA gasoline sulfur content standards under this section in 2007 and 2008, the GPA downstream gasoline sulfur standard under § 80.220(a)(2) shall apply as follows:

(1) During the period of February 1, 2005 through January 31, 2009, the sulfur content of GPA gasoline at any downstream location other than at a retail outlet or wholesale purchaser-consumer facility shall not exceed 326 ppm.

(2) During the period of March 1, 2005 through February 28, 2009, the sulfur content of GPA gasoline at any downstream location shall not exceed 326 ppm.

(n) A foreign refiner may apply to the Administrator to produce gasoline that is subject to the gasoline sulfur standards for GPA gasoline under § 80.216 for the compliance years 2007 and 2008. Such application must be submitted to the EPA, at the address in § 80.595(b), by December 31, 2001.

(1) The Administrator may approve such interim GPA gasoline sulfur standards for the foreign refiner provided that the foreign refiner applies for a gasoline sulfur baseline under paragraph (n)(2) of this section and complies with:

(i) The requirements of paragraphs (b) through (l) of this section;

(ii) The requirements for the import of motor vehicle diesel fuel under § 80.620; and

(iii) All applicable gasoline requirements for refiners under subpart H of this Part, including the foreign refiner requirements under § 80.410, the attest requirements of § 80.415, the recordkeeping and reporting requirements of §§ 80.365 and 80.370, the designation and product transfer document requirements of § 80.219, the sampling and testing requirements of § 80.330, and the sample retention requirements of § 80.335.

(2) The refiner must submit an application for a gasoline sulfur baseline under the provisions of §§ 80.216(a), 80.295, and 80.410(b).

(3) After review of the foreign refiner's individual refinery gasoline sulfur baseline, its individual refinery motor vehicle diesel fuel baseline, and other information submitted with the application, the Administrator may approve such baselines and the application for GPA gasoline sulfur standards for 2007 and 2008.

(o) An importer is not eligible for approval to import gasoline subject to the GPA standards in 2007 or 2008 under this section.

§§ 80.541—80.549 [Reserved]

SMALL REFINER HARDSHIP PROVISIONS

§ 80.550 What is the definition of a small refiner under this subpart?

(a) A small refiner is defined as any person, as defined by 42 U.S.C. 7602(e), who:

(1) Produces diesel fuel at a refinery by processing crude oil through refinery processing units;

(2) Employed an average of no more than 1,500 people, based on the average number of employees for all pay periods from January 1, 1999, to January 1, 2000; and

(3) Had an average crude capacity less than or equal to 155,000 barrels per calendar day (bpcd) for 1999.

(b) For the purpose of determining the number of employees and crude capacity under paragraph (a) of this section, the refiner shall include the employees and crude capacity of any subsidiary companies, any parent company and subsidiaries of the parent company in which the parent has 50% or greater ownership, and any joint venture partners.

(c) The definition under paragraph (a) of this section applies to domestic and foreign refiners. For any refiner owned by a governmental entity, the number of employees as specified in paragraph (a) of this section shall include all employees and total crude capacity of the government of which the governmental entity is a part.

(d) Notwithstanding the provisions of paragraph (a) of this section, a refiner that acquires a refinery after January 1, 2000, or reactivates a refinery that was shutdown or was non-operational between January 1, 1999, and January 1, 2000, may apply for small refiner status in accordance with the provisions of § 80.551(c)(1)(ii).

(e) *Ineligible parties*. The following are ineligible for the small refiner provisions:

(1) Refiners or refineries built or started up after January 1, 2000;

(2) Persons who exceed the employee or crude oil capacity criteria under this section on January 1, 2000, but who meet these criteria after that date, regardless of whether the reduction in employees or crude oil capacity is due to operational changes at the refinery or a company sale or reorganization;

(3) Importers; and

(4) Refiners who produce motor vehicle diesel fuel other than by processing crude oil through refinery processing units.

(f)(1) Refiners who qualify as small refiners under this section and who subsequently employ more than 1500 people as a result of merger with or acquisition of another entity, are disqualified as small refiners. If this occurs, the refiner shall notify EPA in writing no later than 20 days following this disqualifying event.

(2) Any refiner whose status changes under this paragraph shall comply with the sulfur standard of § 80.520(a)(1) beginning January 1 of the calendar year following the disqualifying event in paragraph (f)(1) of this section.

(g) Notwithstanding the criteria in paragraph (a) of this section, any small refiner that has been approved by EPA as a small refiner under § 80.235 and meets the criteria of paragraph (a)(1) of this section, will be considered a small refiner under this section as well, for as long as they are a small refiner under § 80.225. The provisions of paragraph (f) of this section apply to any such refiner.

§ 80.551 How does a refiner obtain approval as a small refiner under this subpart?

(a)(1) Applications for small refiner status must be submitted to EPA by December 31, 2001 as part of the refiner's registration under § 80.597.

(2) In the case of a refiner who acquires a refinery after January 1, 2000, or reactivates a refinery that was shutdown between January 1, 1999, and January 1, 2000, the application for small refiner status must be submitted to EPA by June 1, 2003.

(b) Applications for small refiner status must be sent via certified mail with return receipt or express mail with return receipt to: U.S. EPA–Attn: Diesel Small Refiner Status (6406J), 1200 Pennsylvania Avenue, NW (6406J), Washington, DC 20460 (certified mail/return receipt) or Attn: Diesel Small Refiner Status, Transportation and Regional Programs Division,501 3rd

Street, NW (6406J), Washington, DC 20001 (express mail/return receipt).

(c) The small refiner status application must contain the following information for the company seeking small refiner status, plus any subsidiary companies, any parent company and subsidiaries of the parent company in which the parent has 50% or greater ownership, and any joint venture partners:

(1)(i) A listing of the name and address of each location where any employee worked during the 12 months preceding January 1, 2000; the average number of employees at each location based upon the number of employees for each pay period for the 12 months preceding January 1, 2000; and the type of business activities carried out at each location; or

(ii) In the case of a refiner who acquires a refinery after January 1, 2000, or reactivates a refinery that was shutdown between January 1, 1999, and January 1, 2000, a listing of the name and address of each location where any employee of the refiner worked since the refiner acquired or reactivated the refinery; the average number of employees at any such acquired or reactivated refinery during each calendar year since the refiner acquired or reactivated the refinery; and the type of business activities carried out at each location.

(2) The total corporate crude capacity of each refinery as reported to the Energy Information Administration (EIA) of the U.S. Department of Energy (DOE) for the most recent 12 months of operation. The information submitted to EIA is presumed to be correct. In cases where a company disagrees with this information, the company may petition EPA with appropriate data to correct the record when the company submits its application for small refiner status. EPA may accept such alternate data at its discretion.

(3) An indication of whether the refiner, for each refinery, is applying for:

(i) The ability to produce motor vehicle diesel fuel subject to the 500 ppm sulfur content standard under § 80.520(c) or generate credits under § 80.531, pursuant to the provisions of § 80.552(a) or (b); or

(ii) An extension of the duration of its small refiner gasoline sulfur standard under § 80.553, pursuant to the provisions of § 80.552(c).

(4) A letter signed by the president, chief operating or chief executive officer of the company, or his/her designee, stating that the information contained in the application is true to the best of his/her knowledge.

(5) Name, address, phone number, facsimile number and e-mail address (if available) of a corporate contact person.

(d) For joint ventures, the total number of employees includes the combined employee count of all corporate entities in the venture.

(e) For government-owned refiners, the total employee count includes all government employees.

(f) Approval of small refiner status for refiners who apply under § 80.550(d) will be based on all information submitted under paragraph (c) of this section, except as provided in § 80.550(d).

(g) EPA will notify a refiner of approval or disapproval of small refiner status by letter. If disapproved, the refiner must comply with the sulfur standard in § 80.520, except as otherwise provided in this subpart.

(h) If EPA finds that a refiner provided false or inaccurate information on its application for small refiner status, upon notice from EPA the refiner's small refiner status will be void ab initio.

(i) Upon notification to EPA, an approved small refiner may withdraw its status as a small refiner. Effective on January 1 of the year following such notification, the small refiner will become subject to the sulfur standard of § 80.520 unless one of the hardship provisions of this subpart apply.

§ 80.552 What compliance options are available to small refiners?

(a) A refiner that has been approved by EPA as a small refiner under § 80.551(g) may produce motor vehicle diesel fuel subject to the 500 ppm sulfur content standard pursuant to the provisions of § 80.530, except that the volume limits of § 80.530(a)(3) shall only apply to that volume V^{500} of diesel fuel that is produced or imported during a calendar year that exceeds 105% of the

baseline volume established under § 80.595. The calendar year period shall be from January 1st through December 31st. For the period June 1, 2006 through December 31, 2006, the volume limits shall only apply to that volume VV^{500} that exceeds 60% of the baseline volume.

(b) A refiner that has been approved by EPA as a small refiner under § 80.551(g) may generate motor vehicle diesel fuel credits pursuant to the provisions of § 80.531, except that for purposes of § 80.531(a) the term Credit shall equal VV^{15}, without further adjustment.

(c) A refiner that has been approved by EPA as a small refiner under § 80.551(g) may apply for an extension of the duration of its small refiner gasoline sulfur standards pursuant to § 80.553.

(d) A refiner that produces motor vehicle diesel fuel under the provisions of paragraph (a) of this section or generates credits under the provisions of paragraph (b) of this section may not receive an extension of its small refiner gasoline sulfur standard under the provisions of paragraph (c) of this section. A refiner that receives an extension of its small refiner gasoline sulfur standard under the provisions of paragraph (c) of this section may not produce motor vehicle diesel fuel under the provisions of paragraph (a) of this section and may not generate credits under the provisions of paragraph (b) of this section.

(e) The provisions of this section shall apply separately for each refinery owned or operated by a small refiner.

§ 80.553 Under what conditions may the small refiner gasoline sulfur standards be extended for a small refiner of motor vehicle diesel fuel?

(a) A refiner that has been approved by EPA for small refiner gasoline sulfur standards under § 80.240 may apply, under § 80.551, for an extension of the duration of its small refiner gasoline sulfur standards through the calendar year 2010 annual averaging period.

(b) As part of its application, the refiner must submit an application for a motor vehicle diesel fuel baseline in accordance with the provisions of §§ 80.595 and 80.596. The application must also include information, as provided in § 80.594, demonstrating that starting no later than June 1, 2006, all motor vehicle diesel fuel produced by the refiner will comply with the 15 ppm sulfur content standard under § 80.520(a)(1), and that the volume of motor vehicle diesel fuel produced will comply with the volume requirements of paragraph (e) of this section.

(c) The Administrator may approve an application for extension of the small refiner gasoline sulfur standards if the provisions of paragraph (b) of this section and §§ 80.595 and 80.596 are satisfied. In approving an application for extension, the Administrator shall establish a motor vehicle diesel fuel volume baseline under §§ 80.595 and 80.596.

(d) Beginning June 1, 2006, and continuing through December 31, 2010, all motor vehicle diesel fuel produced by a refiner that has received an extension of its small refiner gasoline sulfur standards under this section must be accurately designated under § 80.523 as meeting the 15 ppm sulfur content standard under § 80.520(a)(1).

(e) The total volume of motor vehicle diesel fuel produced for use in the United States and designated as meeting the 15 ppm sulfur content standard under paragraph (d) of this section must meet or exceed 85% of the baseline volume established under paragraph (c) of this section, except that for the year 2006, the total volume must meet or exceed 50% of the baseline volume.

(f) Compliance with the volume requirements in paragraph (e) of this section shall be determined on a calendar year basis, except that for the year 2006 compliance shall be determined for the period June 1, 2006 through December 31, 2006.

(g) If a refiner fails to comply with the requirements of paragraph (d) of this section, or if approval of the application, including the baseline, was based on false or inaccurate information, the extension of the applicable small refiner gasoline sulfur standards under this section shall be void ab initio, and all gasoline produced by the refinery must meet the gasoline sulfur standards under subpart H of this Part

as if there had been no extension of the small refiner gasoline sulfur standards.

(h) If for any compliance period a refiner fails to meet the volume requirements in paragraph (e) of this section, the extension of the small refiner gasoline sulfur standards shall be void for that compliance period and for all succeeding compliance periods and all gasoline produced by the refinery must meet the gasoline sulfur standards under subpart H of this part as if there had been no extension of the small refiner gasoline sulfur standards under this section for such compliance periods.

(i) A refiner that is approved for an extension of the interim small refiner gasoline sulfur standards under this section must meet all applicable recordkeeping and reporting requirements of §§ 80.592, 80.593, and 80.594, and shall meet all the recordkeeping and reporting requirements under §§ 80.210, 80.365 and 80.370. Any foreign refiner shall meet all additional requirements under §§ 80.620 and 80.410.

(j) A refiner approved for the small refiner gasoline sulfur standards extension under this section may not generate or use credits under § 80.531(a) or (e), or § 80.532.

(k) A refiner may petition the Administrator to vacate an extension of the small refiner gasoline sulfur content standards. EPA may grant such a petition, effective January 1 of the compliance period following receipt of such petition (or effective June 1, 2006, if applicable). Upon such effective date, all gasoline produced by the refiner must meet the gasoline sulfur content standards under subpart H of this Part as if there had been no extension of the small refiner gasoline sulfur content standards under this section. Upon such effective date, the refiner shall not be subject to the requirements of this section.

(l) The provisions of this section shall apply separately for each refinery of a refiner.

§§ 80.554–80.559 [Reserved]

OTHER HARDSHIP PROVISIONS

§ 80.560 How can a refiner seek temporary relief from the requirements of this subpart in case of extreme hardship circumstances?

(a) EPA may, at its discretion, grant a refiner, for one or more of its refineries, temporary relief from some or all of the provisions of this subpart. Such relief shall be no less stringent than the small refiner compliance options specified in § 80.552. EPA may grant such relief provided that the refiner demonstrates that:

(1) Unusual circumstances exist that impose extreme hardship and significantly affect the refiner's ability to comply by the applicable date; and

(2) It has made best efforts to comply with the requirements of this subpart.

(b) Applications must be submitted to EPA by June 1 2002 to the following address: Applications for small refiner status must be sent via certified mail with return receipt or express mail with return receipt to: U.S. EPA-Attn: Diesel Hardship (6406J), 1200 Pennsylvania Avenue, NW (6406J), Washington, DC 20460 (certified mail/return receipt) or Attn: Diesel Hardship, Transportation and Regional Programs Division, 501 3rd Street, NW (6406J), Washington, DC 20001 (express mail/return receipt). EPA reserves the right to deny applications for appropriate reasons, including unacceptable environmental impact. Approval to distribute motor vehicle diesel fuel not subject to the 15 ppm sulfur standard may be granted for such time period as EPA determines is appropriate, but shall not extend beyond May 31, 2010.

(c) Applications must include a plan demonstrating how the refiner will comply with the requirements of this subpart as expeditiously as possible. The plan shall include a showing that contracts are or will be in place for engineering and construction of desulfurization equipment a plan for applying for and obtaining any permits

necessary for construction or operation, projected timeline for beginning and completing construction, and for beginning actual operation of such equipment, and a description of plans to obtain necessary capital, and a detailed estimate of when the requirements of this subpart will be met.

(d) Applicants must provide, at a minimum, the following information:

(1) Detailed description of efforts to obtain capital for refinery investments and efforts made to obtain credits for compliance under § 80.531;

(2) Bond rating of entity that owns the refinery (in the case of joint ventures, include the bond rating of the joint venture entity and the bond ratings of all partners; in the case of corporations, include the bond ratings of any parent or subsidiary corporations); and

(3) Estimated capital investment needed to comply with the requirements of this subpart by the applicable date.

(e) In addition to the application requirements of paragraph (b) of this section, a refiner's application for temporary relief under this paragraph must also include a compliance plan. Such compliance plan shall demonstrate how the refiner will engage in a quality assurance testing program to ensure that its motor vehicle diesel fuel subject solely to the sulfur standards under § 80.520(c) has not caused motor vehicle diesel fuel subject to the 15 ppm standard § 80.520(a)(1) to fail to comply with that standard. The quality assurance program must at least include periodic sampling and testing at the party's own facilities and at downstream facilities in the refiner's or importer's diesel fuel distribution system, to determine compliance with the applicable sulfur standards for both categories of motor vehicle diesel fuel; examination at the party's own facilities and at applicable downstream facilities, of product transfer documents to confirm appropriate transfers and deliveries of both products; and inspection of retailer and wholesale purchaser-consumer pump stands for the presence of the labels and warning signs required under this section. Any violations that are discovered shall be reported to EPA within 48 hours of discovery.

(f) Applications under this section must be accompanied by:

(1) A letter signed by the president, chief operating or chief executive officer of the company, or his/her designee, stating that the information contained in the application is true to the best of his/her knowledge.

(2) The name, address, phone number, facsimile number and e-mail address of a corporate contact person.

(g) Applicants must also provide any other relevant information requested by EPA.

(h) Refiners who are granted a hardship relief standard for any refinery, and importers of fuel subject to temporary refiner relief standards, may not distribute the diesel fuel subject to the sulfur standard under § 80.520(c) for use in model year 2007 and later vehicles and must comply with all applicable provisions of this subpart, including the provisions of this subpart.

(i) EPA may impose any reasonable conditions on waivers under this section, including limitations on the refinery's volume of motor vehicle diesel fuel subject to a temporary refiner relief standards.

(j) The provisions of this section are available only to refineries that produce diesel fuel from crude.

(k) The individual refinery sulfur standard and the compliance plan will be approved or disapproved by the Administrator, and approval will be effective when the refiner (or importer, as applicable, in the case of compliance plans) receives an approval letter from EPA. If disapproved, the refiner or importer must comply with the motor vehicle diesel fuel standard under § 80.520(a)(1) by the appropriate compliance date specified in § 80.500.

(l) If EPA finds that a refiner provided false or inaccurate information on its application for small refiner status, upon notice from EPA the refiner's small refiner status will be void ab initio.

§ 80.561 How can a refiner or importer seek temporary relief from the requirements of this subpart in case of extreme unforseen circumstances?

In appropriate extreme, unusual, and unforseen circumstances (e.g., natural disaster or refinery fire) which are clearly outside the control of the refiner or importer and which could not have been avoided by the exercise of prudence, diligence and due care, EPA may permit a refiner or importer, for a brief period, to distribute motor vehicle diesel fuel which does not meet the requirements of this subpart if:

(a) It is in the public interest to do so (e.g., distribution of the nonconforming diesel fuel is necessary to meet projected shortfalls which cannot otherwise be compensated for);

(b) The refiner or importer exercised prudent planning and was not able to avoid the violation and has taken all reasonable steps to minimize the extent of the nonconformity;

(c) The refiner or importer can show how the requirements for motor vehicle diesel fuel will be expeditiously achieved;

(d) The refiner or importer agrees to make up any air quality detriment associated with the nonconforming motor vehicle diesel fuel, where practicable;

(e) The refiner or importer pays to the U.S. Treasury an amount equal to the economic benefit of the nonconformity minus the amount expended pursuant to paragraph (d) of this section, in making up the air quality detriment; and

(f) In the case of motor vehicle diesel fuel distributed under this section that does not meet the 15 ppm sulfur standard under § 80.520(a)(1), such diesel fuel shall not be distributed for use in model year 2007 or later motor vehicles, and must meet all the requirements and prohibitions of this subpart applicable to diesel fuel meeting the sulfur standard under § 80.520(c), or to diesel fuel that is not motor vehicle diesel fuel, as applicable.

§§ 80.562–80.569 [Reserved]

LABELING REQUIREMENTS

§ 80.570 What labeling requirements apply to retailers and wholesale purchaser-consumers of motor vehicle diesel fuel?

(a) Any retailer or wholesale purchaser-consumer who sells, dispenses, or offers for sale or dispensing, motor vehicle diesel fuel subject to the 500 ppm sulfur standard of § 80.520(c), must prominently and conspicuously display in the immediate area of each pump stand from which motor vehicle fuel subject to the 500 ppm standard is offered for sale or dispensing, the following legible label, in block letters of no less than 36-point bold type, printed in a color contrasting with the background:

HIGH-SULFUR DIESEL FUEL—WARNING

May damage model year 2007 and later highway vehicles.

Federal Law *prohibits* use in these vehicles.

(b) Any retailer or wholesale purchaser-consumer who sells, dispenses, or offers for sale or dispensing, motor vehicle diesel fuel subject to the 15 ppm sulfur standard of § 80.520(a)(1), must affix the following conspicuous and legible label, in block letters of no less than 36-point bold type, and printed in a color contrasting with the background, to each pump stand:

LOW-SULFUR DIESEL FUEL

Recommended for use in all diesel vehicles.

Required for model year 2007 and later vehicles.

(c) Any retailer or wholesale purchaser-consumer who sells, dispenses, or offers for sale or dispensing, diesel fuel for nonroad equipment that does not meet the standards for motor vehicle diesel fuel, must affix the following conspicuous and legible label, in block letters of no less than 36-point bold type, and printed in a color contrasting with the background, to each pump stand:

NONROAD DIESEL FUEL—WARNING

May damage or destroy highway engines and their emission controls.

Federal Law *prohibits* use in any highway vehicle.

(d) The labels required by paragraphs (a) through (c) of this section must be placed on the vertical surface of each pump housing and on each side with gallonage and price meters. The labels shall be on the upper two-thirds of the pump, in a location where they are clearly readable by the public.

§§ 80.571–80.579 [Reserved]

SAMPLING AND TESTING

§ 80.580 What are the sampling and testing methods for sulfur?

(a) *Diesel fuel and diesel fuel additives.* For purposes of §§ 80.520 and 80.521, the sulfur content of diesel and diesel fuel additives is to be determined in accordance with this section.

(1) *Sampling method.* The applicable sampling methodology provided in § 80.330(b).

(2) *Test method for sulfur.* (i) For diesel fuel and diesel fuel additives subject to the 15 ppm sulfur standard of § 80.520(a)(1), the American Society for Testing and Materials (ASTM) standard method D 6428–99, entitled ''Test Method for Total Sulfur in Liquid Aromatic Hydrocarbons and Their Derivatives by Oxidative Combustion and Electrochemical Detection.''

(ii) For diesel fuel and diesel fuel additives subject to the 500 ppm sulfur standard of 80.520(c), ASTM standard method D 2622–98, ''Standard Test Method for Sulfur in Petroleum Products by X-Ray Spectrometry.''

(3) *Alternative test methods for sulfur.* (i) For diesel fuel and diesel fuel additives subject to the 15 ppm standard of § 80.520(a)(1), sulfur content may be determined using ASTM D 5453–99, entitled ''Standard Test Method for Determination of Total Sulfur in Light Hydrocarbons, Motor Fuels and Oils by Ultraviolet Fluorescence,'' or ASTM D 3120–96, entitled ''Standard Test Method for Trace Quantities of Sulfur in Light Liquid Petroleum Hydrocarbons by Oxidative Microcoulometry,'' provided that the refiner or importer test result is correlated with the appropriate method specified in paragraph (a)(2) of this section.

(ii) For diesel fuel and diesel fuel additives subject to the 500 ppm standard of § 80.520(c), sulfur content may be determined using ASTM D 5453–99, ''Standard Test Method for Determination of Total Sulfur in Light Hydrocarbons, Motor Fuels and Oils by Ultraviolet Fluorescence,'' or ASTM D 6428–00, entitled ''Test Method for Total Sulfur in Liquid Aromatic Hydrocarbons and Their Derivatives by Oxidative Combustion and Electrochemical Detection,'' provided that the refiner or importer test result is correlated with the appropriate method specified in paragraph (a)(2) of this section.

(4) *Adjustment Factor for downstream test results.* An adjustment factor of negative 2 ppm shall be applied to the test results, to account for test variability, but only for testing of motor vehicle diesel fuel identified as subject to the 15 ppm sulfur standard of § 80.520(a)(1), at a downstream location as defined in § 80.500(f).

(b) *Incorporation by reference.* ASTM Standard Methods D 2622–98, ''Standard Test Method for Sulfur in Petroleum Products by Wavelength Dispersive X-ray Fluorescence Spectrometry,'' D 3120–96, ''Standard Test Method for Trace Quantities of Sulfur in Light Liquid Petroleum Hydrocarbons by Oxidative Microcoulometry,'' D 6428–99, ''Test Method for Total Sulfur in Liquid Aromatic Hydrocarbons and Their Derivatives by Oxidative Combustion and Electrochemical Detection,'' and D 5453–00, ''Standard Test Method for Determination of Total Sulfur in Light Hydrocarbons, Motor Fuels and Oils by Ultraviolet Fluorescence,'' are incorporated by reference. This incorporation by reference was approved by the Director of the Federal Register in accordance with 5 U.S.C. 552(a) and 1 CFR part 51. Copies may be obtained from the American Society for Testing and Materials, 100 Barr Harbor Dr., West Conshohocken, PA 19428–2959. Copies may be inspected at the Air Docket Section (LE–131), Room M–1500, U.S. Environmental Protection Agency, Docket No. A–99–06, 401 M Street, SW, Washington, DC 20460, or at the Office of the Federal Register, 800 North Capitol Street, NW, Suite 700, Washington, DC.

§§ 80.581–80.589 [Reserved]

RECORDKEEPING AND REPORTING REQUIREMENTS

§ 80.590 What are the product transfer document requirements for motor vehicle diesel fuel?

On each occasion that any person transfers custody or title to motor vehicle diesel fuel, including distillates used or intended to be used as motor vehicle diesel fuel, except when such fuel is dispensed into motor vehicles at a retail outlet or wholesale purchaser-facility, the transferor must provide to the transferee documents identifying the fuel as motor vehicle diesel fuel, and which include the following information:

(a) The name and address of the transferor and transferee.

(b) The volume of motor vehicle diesel fuel which is being transferred.

(c) The location of the motor vehicle diesel fuel at the time of the transfer.

(d) The date of the transfer.

(e) Except as provided in 40 CFR 69.51, an accurate statement, as applicable, that:

(1) ''This fuel complies with the 15 ppm low sulfur standard for motor vehicle diesel fuel.'';

(2) ''This fuel complies with the 500 ppm high sulfur standard for motor vehicle diesel fuel and is for use only in MY 2006 and older diesel motor vehicles.'';

(3) ''This is high sulfur motor vehicle diesel fuel for use only in Guam, American Samoa, or the Northern Mariana Islands.'';

(4) ''This diesel fuel is for export use only.'';

(5) ''This diesel fuel is for research, development, or testing purposes only.'';

(6) ''This diesel fuel is for use in diesel vehicles having an EPA-approved national security exemption only.''.

(f) For motor vehicle diesel fuel that contains visible evidence of the dye solvent red 164, and is intended to be used in a manner that is tax-exempt as defined under section 4082 of the Internal Revenue Code, the following statement:

This fuel is motor vehicle diesel fuel for tax-exempt use only, in accordance with Section 4082 of the Internal Revenue Code.

(g) Except for transfers to truck carriers, retailers or wholesale purchaser-consumers, product codes may be used to convey the information required under this section if such codes are clearly understood by each transferee. Codes used to convey the statement in paragraph (e)(1) of this section must contain the number ''15'', and codes used to convey the statement in paragraph (e)(2) of this section must contain the number ''500''.

(h) Beginning June 1, 2001 and ending May 31, 2005, any transfer subject to this section, which is also subject to the early credit provisions of § 80.531(b), must comply with all applicable requirements of this section except those in paragraph (e) of this section.

(i) Beginning June 1, 2005 and ending May 31, 2006, any transfer subject to this section, which is also subject to the early credit requirements of § 80.531(c), must comply with all applicable requirements of this section.

§ 80.591 What are the product transfer document requirements for additives to be used in diesel fuel?

(a) Except as provided in paragraphs (b) and (d) of this section, on each occasion that any person transfers custody or title to a motor vehicle diesel fuel additive to a party in the additive distribution system or in the motor vehicle diesel fuel distribution system for use downstream of the diesel fuel refiner, the transferor must provide to the transferee documents which identify the additive, and:

(1) Identify the name and address of the transferor and transferee; the date of transfer; the location at which the transfer took place; the volume of additive transferred; and

(2) Indicates compliance with the 15 ppm sulfur standard by inclusion of the following statement:

The sulfur content of this diesel fuel additive does not exceed 15 ppm.

(b) On each occasion that any person transfers custody or title to a motor vehicle diesel fuel additive subject to the requirements of § 80.521(b), to a

party in the additive distribution system or in the motor vehicle diesel fuel distribution system for use in diesel fuel downstream of the diesel fuel refiner, the transferor must provide to the transferee documents which identify the additive, and:

(1) Identify the name and address of the transferor and transferee; the date of transfer; the location at which the transfer took place; the volume of additive transferred.

(2) Indicate the high sulfur potential of the additive by inclusion of the following statement:

This motor vehicle diesel fuel additive may exceed the federal 15 ppm sulfur standard. Improper use of this additive may result in non-complying diesel fuel.

(3) Includes the following information:

(i) The additive's maximum sulfur concentration;

(ii) The maximum recommended concentration in volume percent for use of the additive in diesel fuel; and

(iii) The contribution to the sulfur level of the fuel, in ppm, that would result if the additive is used at the maximum recommended concentration.

(c) Except for transfers of motor vehicle diesel fuel additives to truck carriers, retailers or wholesale purchaser-consumers, product codes may be used to convey the information required under paragraphs (a) and (b) of this section, if such codes are clearly understood by each transferee. Codes used to convey the statement in paragraph (a)(2) of this section must contain the number ''15'' and codes used to convey the statement in paragraph (b)(2) of this section may not contain such number.

(d) For those motor vehicle diesel fuel additives which are sold in containers for use by the ultimate consumer of diesel fuel, each transferor must have displayed on the additive container, in a legible and conspicuous manner, either of the following statements, as applicable:

(1) ''This diesel fuel additive complies with the federal low sulfur content requirements for use in diesel motor vehicles.''; or

(2) For those additives sold in containers for use by the ultimate consumer, with a sulfur content in excess of 15 ppm: ''This diesel fuel additive does not comply with federal low sulfur content requirements for use in model year 2007 and newer diesel motor vehicles.''.

§ 80.592 What records must be kept?

(a) *Records that must be kept by parties in the motor vehicle diesel fuel and motor vehicle diesel fuel additive distribution systems.* Beginning June 1, 2006, or for a refiner the first compliance period in which the refiner is generating early credits under § 80.531(b) or (c), whichever is earlier, any person who produces, imports, sells, offers for sale, dispenses, distributes, supplies, offers for supply, stores, or transports motor vehicle diesel fuel subject to the provisions of this subpart, must keep the following records:

(1) The applicable product transfer documents required under §§ 80.590 and 80.591;

(2) For any sampling and testing for sulfur content, cetane index or aromatics content of motor vehicle diesel fuel or motor vehicle diesel fuel additives, conducted as part of a quality assurance program or otherwise:

(i) The location, date, time and storage tank or truck identification for each sample collected;

(ii) The name and title of the person who collected the sample and the person who performed the testing; and

(iii) The results of the tests for sulfur content (including where applicable the test results with and without application of the adjustment factor under § 80.580(a)(4)) or other standard content, and the volume of product in the storage tank or container from which the sample was taken;

(3) The actions the party has taken, if any, to stop the sale or distribution of any motor vehicle diesel fuel found not to be in compliance with the sulfur standards specified in this subpart, and the actions the party has taken, if any, to identify the cause of any noncompliance and prevent future instances of noncompliance.

(b) *Additional records to be kept by refiners and importers of motor vehicle diesel fuel subject to temporary refiner relief standards, small refiner standards, and early credit provisions.* Beginning June

1, 2006, or for a refiner the first compliance period in which the refiner is generating early credits under § 80.531(b) or (c), whichever is earlier, any refiner producing motor vehicle diesel fuel subject to the sulfur standard under § 80.520(a)(1), for each of its refineries, and any importer importing such motor vehicle diesel fuel, shall keep records that include the following information for each batch of motor vehicle diesel fuel produced or imported:

(1) The batch volume.

(2) The batch number, assigned under the batch numbering procedures under § 80.65(d)(3).

(3) The date of production or import.

(4) A record designating the batch as meeting the 500 ppm sulfur standard or the 15 ppm sulfur standard.

(5) For foreign refiners, the designations and other records required to be kept under § 80.620.

(6) In the case of importers, the designations and other records required under § 80.620(o).

(7) Information regarding credits, kept separately for each calendar year compliance period, kept separately for each refinery and in the case of importers, kept separately for imports into each CTA, as follows:

(i) The number of credits in the refiner's or importer's possession at the beginning of the calendar year;

(ii) The number of credits generated;

(iii) The number of credits used;

(iv) If any were obtained from or transferred to other parties, for each such other party, its name, its EPA refiner or importer registration number consistent with § 80.593(d), in the case of credits generated by an importer the port and CTA of import of the diesel fuel that generated the credits, and the number obtained from, or transferred to, the other party;

(v) The number in the refiner's or importer's possession that will carry over into the subsequent calendar year compliance period; and

(vi) Commercial documents that establish each transfer of credits from the transferor to the transferee.

(8) The calculations used to determine compliance with the volume requirements of this subpart.

(9) The calculations used to determine the number of credits generated.

(10) A copy of reports submitted to EPA under § 80.593.

(c) *Additional records importers must keep.* Any importer shall keep records that identify and verify the source of each batch of certified diesel fuel program foreign refiner (DFR)-Diesel and non-certified DFR-Diesel imported and demonstrate compliance with the requirements under § 80.620.

(d) *Length of time records must be kept.* The records required in this section shall be kept for five years from the date they were created, except that records relating to credit transfers shall be kept by the transferor for 5 years from the date the credits were transferred, and shall be kept by the transferee for 5 years from the date the credits were transferred, used or terminated, whichever is later.

(e) *Make records available to EPA.* On request by EPA the records required in paragraphs (a), (b) and (c) of this section must be made available to the Administrator or the Administrator's authorized representative. For records that are electronically generated or maintained the equipment and software necessary to read the records shall be made available, or if requested by EPA, electronic records shall be converted to paper documents which shall be provided to the Administrator's authorized representative.

§ 80.593 What are the reporting and registration requirements for refiners and importers of motor vehicle diesel fuel subject to temporary refiner relief standards?

Beginning with 2006, or the first compliance period during which credits are generated under § 80.531(b) or (c), whichever is earlier, any refiner or importer who produces or importes motor vehicle diesel fuel subject to the 500 ppm sulfur standard under § 80.520(c), or any refiner or importer who generates, uses, obtains or transfers credits under §§ 80.530 through 80.532, and continuing for each year thereafter, must submit to EPA annual reports that contain the information required in this section, and such other information as EPA may require:

(a) *Refiners and importers.* Refiners and importers must report the following information separately for each

refinery or CTA, in the case of importers, subject to a phase-in sulfur standard, small refiner standard or temporary refiner relief sulfur standard, or who generates, uses or transfers credits under §§ 80.530 through 80.532:

(1) The refiner's name and the EPA refinery registration number.

(2) For all motor vehicle diesel fuel produced for use in the United States during the compliance period:

(i) The total volume of motor vehicle diesel fuel produced;

(ii) The volume, in gallons, that complied with a sulfur content standard of 500 ppm; and

(iii) The volume, in gallons, that complied with the 15 ppm sulfur content standard.

(3) The percentage of the volume motor vehicle diesel fuel produced during the calendar year that met the 15 ppm sulfur standard and the percentage that met the 500 ppm sulfur standard prior to the application of any volume credits.

(4) The percentage of volume of motor vehicle diesel fuel produced meeting the 15 ppm sulfur standard after the inclusion of any credits.

(5) Information regarding credits, separately for each refinery and for credits or debits related to imported motor diesel fuel, separately by importer and separately by CTA of import as follows:

(i) The CTA of the refiner's refinery or the importer's or the foreign refiner's CTA and port of importation;

(ii) The number of credits at the beginning of the compliance period;

(iii) The number of credits generated;

(iv) The number of credits used;

(v) If any credits were obtained from or transferred to other refineries or import ports, for each other refinery or importer, its name, address (or Port) and CTA, EPA refinery or importer registration number, and the number of credits obtained from or transferred to the other refinery or importer (by import CTA);

(vi) The number of credits, if any, that will carry over to the subsequent compliance period; and

(vii) The number of credits in deficit that must be made up for the following year;

(6) The reporting requirements under § 80.620, if applicable.

(7) For each batch of motor vehicle diesel fuel produced or imported during the compliance period:

(i) The batch number assigned using the batch numbering conventions under § 80.65(d)(3) and the appropriate designation under § 80.523;

(ii) The date the batch was produced; and

(iii) The volume of the batch, in gallons.

(8) When submitting reports under this paragraph (a), any importer shall exclude certified DFR-Diesel.

(b) *Additional reporting requirements for importers.* Importers of motor vehicle diesel fuel subject to the 500 ppm sulfur standard must report the following information:

(1) The importer's name and EPA registration number.

(2) For each foreign refinery from which motor vehicle diesel fuel is imported that is subject to a sulfur standard under § 80.520(c), the importer must report, for each batch of diesel fuel imported, the information required to be reported under § 80.620(o).

(c) *Report submission.* Any annual report required by this section shall be:

(1) Signed and certified as meeting all the applicable requirements of this subpart by the owner or a responsible corporate officer of the refiner or importer; and

(2) Submitted to EPA no later than the last day of February for the prior calendar year period.

§ 80.594 What are the pre-compliance reporting requirements?

(a) Beginning on June 1, 2003, and on June 1, 2004 and June 1, 2005, all refiners and importers planning to produce or import motor vehicle diesel fuel subject to the provisions of this subpart, shall submit the following information to EPA:

(1) Any changes to the information submitted for the company registration;

(2) Any changes to the information submitted for any refinery or import facility registration;

(3) An estimate of the annual production or importation, in gallons, after

June 1, 2006, for each refinery and import facility, of 15 ppm motor vehicle diesel fuel produced from crude oil and, if applicable, 500 ppm motor vehicle diesel fuel produced from crude oil, and the volumes of each grade of motor vehicle diesel fuel produced from other sources;

(4) If expecting to participate in the temporary compliance options provisions and the credit trading program, estimates of the number of credits to be generated and/or used each year the program is applicable;

(5) Information regarding engineering plans (e.g., design and construction), the status of obtaining any necessary permits, and capital commitments for making the necessary modifications to produce low sulfur motor vehicle fuel, and actual construction progress. The pre-compliance reports due 2004 and 2005 must provide an update of the progress in each of these areas.

(b) Beginning on June 1, 2003, all approved small refiners shall submit the following additional information to EPA, as applicable:

(1) In the case of a refinery with an approved application under § 80.552(a):

(i) A showing that sufficient sources of 15 ppm motor vehicle diesel fuel will likely be available in its marketing area after June 1, 2006 and through 2010;

(ii) If after 2003 the sources of 15 ppm motor vehicle diesel fuel decrease, the pre-compliance reports for 2004 and/or 2005 must identify this change and must include a supplementary showing that the sources of 15 ppm motor vehicle diesel fuel are still sufficient.

(2) In case of a refinery with an approved application under § 80.552(c), a demonstration that by June 1, 2006 its motor vehicle diesel fuel will be at 15 ppm sulfur at a volume at least 85% of its baseline motor vehicle diesel fuel volume.

(c) For each refiner and importer approved under § 80.540, a demonstration that by June 1, 2006 all of its motor vehicle diesel fuel will be at 15 ppm sulfur at a volume of at least 85% of its baseline motor vehicle diesel fuel volume.

(d) By July 1, 2006, each refiner and importer of motor vehicle diesel fuel shall submit a report to EPA stating that the production or importation of 15 ppm sulfur motor vehicle diesel fuel commenced by June 1, 2006.

§ 80.595 How does a refiner apply for a motor vehicle diesel fuel volume baseline?

(a) Any small refiner applying for extension of the duration of its small refiner gasoline sulfur standards of § 80.240, under §§ 80.552(c) and 80.553, or any refiner applying for an extension of the duration of the GPA standards under § 80.540 must apply for a motor vehicle diesel fuel volume baseline by December 31, 2001. A separate volume baseline must be sought for each refinery for which application of the provisions of § 80.553 or § 80.540 is sought.

(b) The volume baseline must be sent via certified mail with return receipt or express mail with return receipt to: U.S. EPA-Attn: Diesel Baseline (6406J), 1200 Pennsylvania Avenue, NW (6406J), Washington, DC 20460 (certified mail/return receipt) or Attn: Diesel Baseline, Transportation and Regional Programs Division, 501 3rd Street, NW (6406J), Washington, DC 20001 (express mail/return receipt).

(c) The motor vehicle diesel fuel volume baseline application must include the following information:

(1) A listing of the names and addresses of all refineries owned by the refiner for which the refiner is applying for a motor vehicle diesel fuel volume baseline.

(2) The average annual volume (in gallons) of motor vehicle diesel fuel produced for U.S. use in 1998 and 1999, for each refinery for which the refiner is applying for such baseline, calculated in accordance with § 80.596. The refiner shall follow the procedures, applicable to volume baselines and using motor vehicle diesel fuel instead of gasoline, specified in §§ 80.91 through 80.93 to establish the volume of motor vehicle diesel fuel that was produced for U.S. use in 1998 and 1999 for purposes of establishing a volume baseline under this section.

(3) A letter signed by the president, chief operating, or chief executive officer of the company, or his/her delegate, stating that the information contained in the volume baseline determination is true to the best of his/her knowledge.

(4) Name, address, phone number, facsimile number, and e-mail address (if availabale) of a corporate contact person.

(5) The following information for each batch of motor vehicle diesel fuel produced for U.S. use in 1998 and 1999:

(i) Batch number assigned to the batch under procedures such as those in § 80.65(d) or § 80.101(i), or, if unavailable, such other identifying information as is available; and

(ii) Volume of the batch, in gallons.

(6) For a refinery that was not in operation during part or all of the period 1998 and 1999, the information required under this paragraph (c) for the motor vehicle diesel fuel produced for U.S. use during the most recent calendar year that the refinery was in operation after the refinery was reactivated.

(d) Within 120 days of receipt of an application under this section, EPA will notify the refiner of an approval of the refinery's baseline, or of any deficiencies in the application.

(e) If at any time the baseline submitted in accordance with the requirements of this section is determined to be incorrect, EPA will notify the refiner of the corrected baseline. The corrected baseline shall apply to all applicable compliance calculations under this subpart.

(f)(1) If insufficient information is available for the Administrator to establish a baseline under the provisions of paragraph (c) of this section and § 80.596(a), the refiner shall submit additional information sufficient for the Administrator to establish a baseline.

(2) To satisfy the requirements of paragraph (f)(1) of this section, the Administrator may require, and consider, any information pertinent to establish a baseline, including:

(i) Motor vehicle diesel fuel production volumes for other years;

(ii) Crude capacity of the refinery;

(iii) The ratio, or the typical ratio, for other similarly sized or configured refineries, between motor vehicle diesel fuel production and gasoline production.

§ 80.596 How is a refinery motor vehicle diesel fuel volume baseline calculated?

(a) For purposes of this subpart, a refinery's motor vehicle diesel fuel volume baseline is calculated using the following equation:

$$V_{Base} = \frac{\sum_{i=1}^{n}(V_i)}{m/12}$$

Where:

V_{Base} = Volume baseline value.

V_i = Volume of motor vehicle diesel fuel batch i.

n = Total number of batches of motor vehicle diesel fuel produced for U.S. use during January 1, 1998 through December 31, 1999 (or the total number of batches of motor vehicle diesel fuel produced during the most recent calendar year the refinery was in operation after being reactivated pursuant to § 80.595(c)(6)); or, for a foreign refinery, the total number of batches of motor vehicle diesel fuel produced and imported into the U.S. during January 1, 1998 through December 31, 1999 (or the total number of batches of motor vehicle diesel fuel produced and imported into the U.S. during the most recent calendar year the refinery was in operation after being reactivated pursuant to § 80.595(c)(6)).

i = Individual batch of motor vehicle diesel fuel produced during January 1, 1998 through December 31, 1999 (or individual batch of motor vehicle diesel fuel produced during the most recent calendar year the refinery was in operation after being reactivated pursuant to § 80.595(c)(6)); or, for a foreign refinery, individual batch of motor vehicle diesel fuel produced and imported into the U.S. during January 1, 1998 through December 31, 1999 (or individual batch of motor vehicle diesel fuel produced and imported into the U.S. during the most recent calendar year the refinery was in operation after being reactivated pursuant to § 80.595(c)(6)).

m = Number of months in the baseline period (24 except in the case of a startup or reactivation).

(b) If insufficient information is available for the Administrator to establish a baseline under paragraph (a) of this section, the baseline may be determined under the provisions of § 80.595(f).

§ 80.597 What are the registration requirements?

Refiners having any refinery that is subject to a sulfur standard under § 80.520(c), and importers importing such diesel fuel, must provide EPA the information under § 80.76 no later than December 31, 2001, if such information has not been provided under the provisions of this part. In addition, for each import facility, the same identifying information as required for each refinery under § 80.76(c) must be provided.

§§ 80.598–80.599 [Reserved]

EXEMPTIONS

§ 80.600 What are the requirements for obtaining an exemption for motor vehicle diesel fuel used for research, development or testing purposes?

(a) *Written request for R&D exemption.* Any person may receive an exemption from the provisions of this subpart for motor vehicle diesel fuel used for research, development, or testing (''R&D'') purposes by submitting the information listed in paragraph (c) of this section to:

(1) Director (6406J), Transportation and Regional Programs Division, U.S. Environmental Protection Agency, Ariel Rios Building, 1200 Pennsylvania Avenue, NW., Washington, DC 20460 (postal mail); or

(2) Director (6406J), Transportation and Regional Programs Division, U.S. Environmental Protection Agency, 501 3rd Street, NW., Washington, DC 20001 (express mail/courier); and

(3) Director (2242A), Air Enforcement Division, U.S. Environmental Protection Agency, Ariel Rios Building, 1200 Pennsylvania Avenue, NW., Washington, DC 20460.

(b) *Criteria for an R&D exemption.* For an R&D exemption to be granted, the person requesting an exemption must:

(1) Demonstrate a purpose that constitutes an appropriate basis for exemption;

(2) Demonstrate that an exemption is necessary;

(3) Design an R&D program to be reasonable in scope; and

(4) Exercise a degree of control consistent with the purpose of the program and EPA's monitoring requirements.

(c) *Information required to be submitted.* To demonstrate each of the elements in paragraphs (b)(1) through (4) of this section, the person requesting an exemption must include the following information in the written request required under paragraph (a) of this section:

(1) A concise statement of the purpose of the program demonstrating that the program has an appropriate R&D purpose.

(2) An explanation of why the stated purpose of the program cannot be achieved in a practicable manner without performing one or more of the prohibited acts under this subpart.

(3) To demonstrate the reasonableness of the scope of the program:

(i) An estimate of the program's duration in time and, if appropriate, mileage;

(ii) An estimate of the maximum number of vehicles or engines involved in the program;

(iii) The manner in which the information on vehicles and engines used in the program will be recorded and made available to the Administrator upon request; and

(iv) The quantity of diesel fuel which does not comply with the requirements of §§ 80.520 through 80.525.

(4) With regard to control, a demonstration that the program affords EPA a monitoring capability, including:

(i) The site(s) of the program (including facility name, street address, city, county, state, and zip code);

(ii) The manner in which information on vehicles and engines used in the program will be recorded and made available to the Administrator upon request;

(iii) The manner in which information on the diesel fuel used in the program (including quantity, fuel properties, name, address, telephone number and contact person of the supplier, and the date received from the supplier), will be recorded and made available to the Administrator upon request;

(iv) The manner in which the party will ensure that the R&D fuel will be segregated from motor vehicle diesel

fuel and fuel pumps will be labeled to ensure proper use of the R&D diesel fuel;

(v) The name, address, telephone number and title of the person(s) in the organization requesting an exemption from whom further information on the application may be obtained; and

(vi) The name, address, telephone number and title of the person(s) in the organization requesting an exemption who is responsible for recording and making available the information specified in this paragraph (c), and the location where such information will be maintained.

(d) *Additional requirements.* (1) The product transfer documents associated with R&D motor vehicle diesel fuel must comply with requirements of § 80.590(b)(5).

(2) The R&D diesel fuel must be designated by the refiner or supplier, as applicable, as R&D diesel fuel.

(3) The R&D diesel fuel must be kept segregated from non-exempt motor vehicle diesel fuel at all points in the distribution system.

(4) The R&D diesel fuel must not be sold, distributed, offered for sale or distribution, dispensed, supplied, offered for supply, transported to or from, or stored by a diesel fuel retail outlet, or by a wholesale purchaser-consumer facility, unless the wholesale purchaser-consumer facility is associated with the R&D program that uses the diesel fuel.

(5) At the completion of the program, any emission control systems or elements of design which are damaged or rendered inoperative shall be replaced on vehicles remaining in service, or the responsible person will be liable for a violation of the Clean Air Act Section 203(a)(3) unless sufficient evidence is supplied that the emission controls or elements of design were not damaged.

(e) *Mechanism for granting of an exemption.* A request for an R&D exemption will be deemed approved by the earlier of sixty (60) days from the date on which EPA receives the request for exemption, (provided that EPA has not notified the applicant of potential disapproval by that time), or the date on which the applicant receives a written approval letter from EPA.

(1) The volume of diesel fuel subject to the approval shall not exceed the estimated amount in paragraph (c)(3)(iv) of this section, unless EPA grants a greater amount in writing.

(2) Any exemption granted under this section will expire at the completion of the test program or three years from the date of approval, whichever occurs first, and may only be extended upon re-application consistent will all requirements of this section.

(3) The passage of sixty (60) days will not signify the acceptance by EPA of the validity of the information in the request for an exemption. EPA may elect at any time to review the information contained in the request, and where appropriate may notify the responsible person of disapproval of the exemption.

(4) In granting an exemption the Administrator may include terms and conditions, including replacement of emission control devices or elements of design, that the Administrator determines are necessary for monitoring the exemption and for assuring that the purposes of this subpart are met.

(5) Any violation of a term or condition of the exemption, or of any requirement of this section, will cause the exemption to be void ab initio.

(6) If any information required under paragraph (c) of this section should change after approval of the exemption, the responsible person must notify EPA in writing immediately. Failure to do so may result in disapproval of the exemption or may make it void ab initio, and may make the party liable for a violation of this subpart.

(f) *Effects of exemption.* Motor vehicle diesel fuel that is subject to an R&D exemption under this section is exempt from other provisions of this subpart provided that the fuel is used in a manner that complies with the purpose of the program under paragraph (c) of this section and the requirements of this section.

(g) *Notification of Completion.* The party shall notify EPA in writing within thirty (30) days of completion of the R&D program.

§ 80.601 What requirements apply to motor vehicle diesel fuel for use in the Territories?

The sulfur standards of § 80.520(a)(1) and (c) do not apply to diesel fuel that is produced, imported, sold, offered for sale, supplied, offered for supply, stored, dispensed, or transported for use in the Territories of Guam, American Samoa or the Commonwealth of the Northern Mariana Islands provided that such diesel fuel is:

(a) Designated by the refiner or importer as high sulfur diesel fuel only for use in Guam, American Samoa, or the Commonwealth of the Northern Mariana Islands;

(b) Used only in Guam, American Samoa, or the Commonwealth of the Northern Mariana Islands;

(c) Accompanied by documentation that complies with the product transfer document requirements of § 80.590(e)(3); and

(d) Segregated from non-exempt motor vehicle diesel fuel at all points in the distribution system from the point the diesel fuel is designated as exempt fuel only for use in Guam, American Samoa, or the Commonwealth of the Northern Mariana Islands, while the exempt fuel is in the United States but outside these Territories.

§ 80.602 What exemption applies to diesel fuel used in vehicles having a national security exemption from motor vehicle emissions standards?

The motor vehicle diesel fuel standards of § 80.520(a)(1), (a)(2), and (c) do not apply to diesel fuel that is produced, imported, sold, offered for sale, supplied, offered for supply, stored, dispensed, or transported for use in:

(a) Vehicles for which EPA has granted a national security exemption under 40 CFR 85.1708 from motor vehicle emissions standards under 40 CFR Part 86; or

(b) Tactical military motor vehicles that are not subject to a national security exemption from motor vehicle emissions standards but for national security purposes (for purposes of readiness for deployment oversees) need to be fueled on the same fuel as motor vehicles for which EPA has granted a national security exemption, provided that such fuel is:

(1) Used only in vehicles identified in paragraph (a) of this section or this paragraph (b);

(2) Accompanied by product transfer documents as required under § 80.590;

(3) Segregated from non-exempt motor vehicle diesel fuel at all points in the distribution system; and

(4) Dispensed from a fuel pump stand, fueling truck or tank that is labeled under the provisions of § 80.570(c). Any such fuel pump stand, fueling truck or tank may also be labeled with the appropriate designation of the fuel, such as ''JP–8''.

§ 80.603–80.609 [Reserved]

VIOLATION PROVISIONS

§ 80.610 What acts are prohibited under the diesel fuel sulfur program?

No person shall:

(a) *Standard or dye violation.* Produce, import, sell, offer for sale, dispense, supply, offer for supply, store or transport motor vehicle diesel fuel that does not comply with the applicable standards and dye requirements under § 80.520.

(b) *Additive violation.* (1) Produce, import, sell, offer for sale, dispense, supply, offer for supply, store or transport any motor vehicle diesel fuel additive for use at a downstream location that does not comply with the requirements under § 80.521(a) or (b), as applicable.

(2) Blend or permit the blending into motor vehicle diesel fuel at a downstream location, or use, or permit the use, as motor vehicle diesel fuel, of any additive which does not comply with the requirements of § 80.521(a) or (b), as applicable.

(c) *Used motor oil violation.* Introduce into the fuel system of model year 2007 or later diesel motor vehicles, or permit the introduction into the fuel system of such vehicles of used motor oil, or used motor oil blended with diesel fuel, which does not comply with the requirements of § 80.522.

(d) *Improper fuel usage violation.* (1) Introduce, or permit the introduction of, diesel fuel into model year 2007 or later diesel motor vehicles, and beginning December 1, 2010 into any diesel

motor vehicle, which does not comply with the standards and dye requirements of § 80.520(a) and (b).

(2) Produce, import, sell, offer for sale, dispense, offer for supply, store, or transport for use in model year 2007 or later diesel motor vehicles, or introduce or permit the introduction into such motor vehicles, motor vehicle diesel fuel that is identified as other than diesel fuel complying with the 15 ppm sulfur standard; and beginning December 1, 2010, diesel fuel for use in or introduced into any diesel motor vehicle.

(e) *Cause another party to violate.* Cause another person to commit an act in violation of paragraphs (a) through (d) of this section.

(f) *Cause violating fuel or additive to be in the distribution system.* Cause motor vehicle diesel fuel to be in the motor vehicle diesel fuel distribution system which does not comply with the applicable standard and dye requirements of § 80.520(a) and (b), or cause any motor vehicle diesel fuel additive to be in the motor vehicle diesel fuel additive distribution system which does not comply with the applicable sulfur, cetane, and/or aromatics standards of § 80.521.

§ 80.611 What evidence may be used to determine compliance with the prohibitions and requirements of this subpart and liability for violations of this subpart?

(a) *Compliance with sulfur, cetane, and aromatics standards.* Compliance with the standards in §§ 80.520, 80.521, and 80.522 shall be determined based on the level of the applicable component or parameter, using the sampling methodologies specified in § 80.330(b), as applicable, and the appropriate testing methodologies specified in § 80.580(a)(2) for sulfur, or one of the alternative methodologies for sulfur as approved under § 80.580(a)(3); § 80.2(w) for cetane index; and § 80.2(z) for aromatic content. Any evidence or information, including the exclusive use of such evidence or information, may be used to establish the level of the applicable component or parameter in the diesel fuel or additive, or motor oil to be used in diesel fuel, if the evidence or information is relevant to whether that level would have been in compliance with the standard if the regulatory sampling and testing methodology had been correctly performed. Such evidence may be obtained from any source or location and may include, but is not limited to, test results using methods other than the compliance methods in this paragraph (a), business records, and commercial documents.

(b) *Compliance with other requirements.* Determination of compliance with the requirements of this subpart other than the standards described in paragraph (a) of this section and in §§ 80.520, 80.521, and 80.522, and determination of liability for any violation of this subpart, may be based on information obtained from any source or location. Such information may include, but is not limited to, business records and commercial documents.

§ 80.612 Who is liable for violations of this subpart?

(a) *Persons liable for violations of prohibited acts.*—(1) *Standard, dye, additives, motor oil, and introduction violations.* (i) Any refiner, importer, distributor, reseller, carrier, retailer, or wholesale purchaser-consumer who owned, leased, operated, controlled or supervised a facility where a violation of § 80.610(a) through (d) occurred, or any other person who violates § 80.610(a) through (d), is deemed liable for the applicable violation.

(ii) Any person who causes another person to violate § 80.610(a) through (d) is liable for a violation of § 80.610(e).

(iii) Any refiner, importer, distributor, reseller, carrier, retailer, or wholesale purchaser-consumer who produced, imported, sold, offered for sale, dispensed, supplied, offered to supply, stored, transported, or caused the transportation or storage of, motor vehicle diesel fuel that violates § 80.610(a), is deemed in violation of § 80.610(e).

(iv) Any person who produced, imported, sold, offered for sale, dispensed, supplied, offered to supply, stored, transported, or caused the transportation or storage of a motor vehicle diesel fuel additive which is used in motor vehicle diesel fuel that is found to violate § 80.610(a), is deemed in violation of § 80.610(e).

(2) *Cause violating motor vehicle diesel fuel or additive to be in the distribution*

system. Any refiner, importer, distributor, reseller, carrier, retailer, or wholesale purchaser-consumer or any other person who owned, leased, operated, controlled or supervised a facility from which motor vehicle diesel fuel or additive was released into the motor vehicle diesel fuel or additive distribution system which does not comply with the applicable standards or dye requirements of § 80.520 or § 80.521, is deemed in violation of § 80.610(f).

(3) *Branded refiner/importer liability.* Any refiner or importer whose corporate, trade, or brand name, or whose marketing subsidiary's corporate, trade, or brand name appeared at a facility where a violation of § 80.610(a) occurred, is deemed in violation of § 80.610(a).

(4) *Carrier causation.* In order for a motor vehicle diesel fuel or motor vehicle diesel fuel additive carrier to be liable under paragraph (a)(1)(ii), (iii) or (iv) of this section, as applicable, EPA must demonstrate, by reasonably specific showing by direct or circumstantial evidence, that the carrier caused the violation.

(5) *Parent corporation.* Any parent corporation is liable for any violations of this subpart that are committed by any subsidiary.

(6) *Joint venture.* Each partner to a joint venture is jointly and severally liable for any violation of this subpart that occurs at the joint venture facility or is committed by the joint venture operation.

(b) *Persons liable for failure to comply with other provisions ofthis subpart.* Any person who:

(1) Fails to comply with the requirements of a provision of this subpart not addressed in paragraph (a) of this section is liable for a violation of that provision; or

(2) Causes another person to fail to comply with the requirements of a provision of this subpart not addressed in paragraph (a) of this section, is liable for causing a violation of that provision.

§ 80.613 What defenses apply to persons deemed liable for a violation of a prohibited act?

(a) *Presumptive liability defenses.* (1) Any person deemed liable for a violation of a prohibition under § 80.612(a)(1)(i) or (iii), (a)(2), or (a)(3), will not be deemed in violation if the person demonstrates:

(i) The violation was not caused by the person or the person's employee or agent;

(ii) Product transfer documents account for fuel or additive found to be in violation and indicate that the violating product was in compliance with the applicable requirements when it was under the party's control;

(iii) The person conducted a quality assurance sampling and testing program, as described in paragraph (d) of this section, except for those parties subject to the provisions of paragraph (a)(1)(iv) or (v) of this section. A carrier may rely on the quality assurance program carried out by another party, including the party who owns the diesel fuel in question, provided that the quality assurance program is carried out properly. Retailers, wholesale purchaser-consumers, and ultimate consumers of diesel fuel are not required to conduct quality assurance programs;

(iv) For refiners and importers of motor vehicle diesel fuel subject to the 15 ppm standard under § 80.520(a)(1), test results which:

(A) Were conducted according to the test methodology required under § 80.580 (a)(2) or an approved alternative test method under § 80.580(a)(3); and

(B) Establish that, when it left the party's control, the sulfur content of motor vehicle diesel fuel subject to the 15 ppm standard did not exceed 15 ppm; and

(v) For any person who, at a downstream location, blends a diesel fuel additive subject to the requirements of § 80.521(b) into motor vehicle diesel fuel subject to the sulfur standard under § 80.520(a)(1), except a blender who blends additives into fuel trucks at a truck loading rack subject to the provisions of (d)(1) of this section, test results which are conducted subsequent to the blending of the additive into the fuel, and which comply with the requirements of paragraphs (a)(4)(iv)(A) and (B) of this section.

(2) Any party deemed liable for a violation under § 80.612(a)(1)(iv), in regard to a diesel fuel additive subject to the requirements of § 80.521(a), will not be

deemed in violation if the person demonstrates that:

(i) Product transfer document(s) account for the additive in the fuel found to be in violation, which comply with the requirements under § 80.591(a), and indicate that the additive was in compliance with the applicable requirements while it was under the party's control; and

(ii) For the additive's manufacturer or importer, test results which accurately establish that, when it left the party's control, the additive in the diesel fuel determined to be in violation did not have a sulfur content in excess of 15 ppm.

(A) Analysis of the additive sulfur content pursuant to this paragraph (a)(2) may be conducted at the time the batch was manufactured or imported, or on a sample of that batch which the manufacturer or importer retains for such purpose for a minimum of two years from the date the batch was manufactured or imported.

(B) After two years from the date the additive batch was manufactured or imported, the additive manufacturer or importer is no longer required to retain samples for the purpose of complying with the testing requirements of this paragraph (a)(2) of this section.

(C) The analysis of the sulfur content of the additive must be conducted pursuant to the requirements of § 80.580(a).

(3) Any person who is deemed liable for a violation under § 80.612 (a)(1)(iv) with regard to a diesel fuel additive subject to the requirements of § 80.521(b), will not be deemed in violation if the person demonstrates that:

(i) The violation was not caused by the party or the party's employee or agent;

(ii) Product transfer document(s) which comply with the additive information requirements under § 80.591 (b), account for the additive in the fuel found to be in violation, and indicate that the additive was in compliance with the applicable requirements while it was under the party's control; and

(iii) For the additive's manufacturer or importer, test results which accurately establish that, when it left the party's control, the additive in the diesel fuel determined to be in violation was in conformity with the information on the additive product transfer document pursuant to the requirements of § 80.591(b). The testing procedures applicable under paragraph (a)(2) of this section, also apply under this paragraph (a)(3).

(b) *Branded refiner defenses.* In the case of a violation found at a facility operating under the corporate, trade or brand name of a refiner or importer, or a refiner's or importer's marketing subsidiary, the refiner or importer must show, in addition to the defense elements required under paragraph (a)(1) of this section, that the violation was caused by:

(1) An act in violation of law (other than the Clean Air Act or this Part 80), or an act of sabotage or vandalism;

(2) The action of any refiner, importer, retailer, distributor, reseller, oxygenate blender, carrier, retailer or wholesale purchaser-consumer in violation of a contractual agreement between the branded refiner or importer and the person designed to prevent such action, and despite periodic sampling and testing by the branded refiner or importer to ensure compliance with such contractual obligation; or

(3) The action of any carrier or other distributor not subject to a contract with the refiner or importer, but engaged for transportation of diesel fuel, despite specifications or inspections of procedures and equipment which are reasonably calculated to prevent such action.

(c) *Causation demonstration.* Under paragraph (a)(1) of this section for any person to show that a violation was not caused by that person, or under paragraph (b) of this section to show that a violation was caused by any of the specified actions, the person must demonstrate by reasonably specific showing, by direct or circumstantial evidence, that the violation was caused or must have been caused by another person and that the person asserting the defense did not contribute to that other person's causation.

(d) *Quality assurance and testing program.* To demonstrate an acceptable quality assurance program under paragraph (a)(1)(iii) of this section, a person must present evidence of the following:

(1) A periodic sampling and testing program to ensure the motor vehicle

diesel fuel or additive the person sold, dispensed, supplied, stored, or transported, meets the applicable standards.

(2) For those parties who, at a downstream location, blend diesel fuel additives subject to the requirements of § 80.521(b) into fuel trucks at a truck loading rack, the periodic sampling and testing program required under this paragraph (d) must ensure, by taking into account the greater risk of noncompliance created through use of a high sulfur additive, that the diesel fuel into which the additive was blended meets the applicable standards subsequent to the blending.

(3) On each occasion when motor vehicle diesel fuel or additive is found not in compliance with the applicable standard:

(i) The person immediately ceases selling, offering for sale, dispensing, supplying, offering for supply, storing or transporting the non-complying product; and

(ii) The person promptly remedies the violation and the factors that caused the violation (for example, by removing the non-complying product from the distribution system until the applicable standard is achieved and taking steps to prevent future violations of a similar nature from occurring).

(4) For any carrier who transports motor vehicle diesel fuel or additive in a tank truck, the quality assurance program required under this paragraph (d) need not include its own periodic sampling and testing of the motor vehicle diesel fuel or additive in the tank truck, but in lieu of such tank truck sampling and testing, the carrier shall demonstrate evidence of an oversight program for monitoring compliance with the requirements of this subpart relating to the transport or storage of such product by tank truck, such as appropriate guidance to drivers regarding compliance with the applicable sulfur standard and product transfer document requirements, and the periodic review of records received in the ordinary course of business concerning motor vehicle diesel fuel or additive quality and delivery.

§ 80.614 What penalties apply under this subpart?

(a) Any person liable for a violation under § 80.612 is subject to civil penalties as specified in section 205 of the Clean Air Act for every day of each such violation and the amount of economic benefit or savings resulting from each violation.

(b)(1) Any person liable under § 80.612(a)(1) for a violation of an applicable standard or requirement under § 80.520, or of causing another party to violate such standard or requirement, is subject to a separate day of violation for each and every day the non-complying motor vehicle diesel fuel remains any place in the distribution system.

(2) Any person liable under § 80.612(a)(2) for causing motor vehicle diesel fuel to be in the distribution system which does not comply with an applicable standard or requirement of § 80.520, is subject to a separate day of violation for each and every day that the non-complying motor vehicle diesel fuel remains any place in the motor vehicle diesel fuel distribution system.

(3) Any person liable under § 80.612(a)(1) for blending into motor vehicle diesel fuel an additive violating the applicable sulfur standard pursuant to the requirements of § 80.521(a) or (b), as appropriate, or of causing another party to so blend or add such an additive, is subject to a separate day of violation for each and every day the motor vehicle diesel fuel into which the noncomplying additive was blended, remains any place in the fuel distribution system.

(4) For purposes of this paragraph (b), the length of time the motor vehicle diesel fuel in question remained in the motor vehicle diesel fuel distribution system is deemed to be twenty-five days, unless a person subject to liability or EPA demonstrates by reasonably specific showings, by direct or circumstantial evidence, that the noncomplying motor vehicle diesel fuel remained in the distribution system for fewer than or more than twenty-five days.

(c) Any person liable under § 80.612(b) for failure to meet, or causing a failure to meet, a provision of this subpart is liable for a separate day of violation

for each and every day such provision remains unfulfilled.

§§ 80.615–80.619 [Reserved]

PROVISIONS FOR FOREIGN REFINERS AND IMPORTERS FOR MOTOR VEHICLE DIESEL FUEL SUBJECT TO A TEMPORARY COMPLIANCE OPTION OR HARDSHIP PROVISION

§ 80.620 What are the additional requirements for motor vehicle diesel fuel produced by foreign refineries subject to a temporary refiner compliance option or hardship provisions?

(a) *Definitions.* (1) A foreign refinery is a refinery that is located outside the United States, the Commonwealth of Puerto Rico, the Virgin Islands, Guam, American Samoa, and the Commonwealth of the Northern Mariana Islands (collectively referred to in this section as ''the United States'').

(2) A foreign refiner is a person who meets the definition of refiner under § 80.2(i) for a foreign refinery.

(3) A diesel fuel program foreign refiner (''DFR'') is a foreign refiner that has been approved by EPA for participation in any motor vehicle diesel fuel credits program, motor vehicle diesel fuel temporary compliance option, hardship or GPA provisions of §§ 80.530 through 80.532, § 80.540, § 80.552, § 80.553, § 80.560 or § 80.561 (collectively referred to as ''diesel foreign refiner program'').

(4) ''DFR-Diesel'' means motor vehicle diesel fuel produced at a DFR refinery that is imported into the United States.

(5) ''Non-DFR-Diesel'' means motor vehicle diesel fuel that is produced at a foreign refinery that has not been approved as a DFR foreign refiner, motor vehicle diesel fuel produced at a DFR foreign refinery that is not imported into the United States, and motor vehicle diesel fuel produced at a DFR foreign refinery during a period when the foreign refiner has opted to not participate in the DFR-Diesel diesel foreign refiner program under paragraph (c)(3) of this section.

(6) ''Certified DFR-Diesel'' means DFR-Diesel the foreign refiner intends to include in the foreign refinery's compliance calculations under §§ 80.530 through 80.532, § 80.540, § 80.552, § 80.553, § 80.560 or § 80.561 and does include in these compliance calculations when reported to EPA.

(7) ''Non-Certified DFR-Diesel'' means DFR-Diesel fuel that a DFR foreign refiner imports to the United States that is not Certified DFR-Diesel.

(b) *Baseline.* For any foreign refiner to obtain approval under the diesel foreign refiner program of this subpart for any refinery, it must apply for approval under the applicable provisions of this subpart. To obtain approval the refiner is required, as applicable, to demonstrate a volume baseline for calendar years 1998 and 1999 for motor vehicle diesel fuel produced for use in the United States under §§ 80.595 and 80.596.

(1) The refiner shall follow the procedures, applicable to volume baselines and using motor vehicle diesel fuel instead of gasoline, in §§ 80.91 through 80.93 to establish the volume of motor vehicle diesel fuel that was produced at the refinery and imported into the United States during 1998 and 1999 for purposes of establishing a baseline under §§ 80.595 and 80.596.

(2) In making determinations for foreign refinery baselines EPA will consider all information supplied by a foreign refiner, and in addition may rely on any and all appropriate assumptions necessary to make such determinations.

(3) Where a foreign refiner submits a petition that is incomplete or inadequate to establish an accurate baseline, and the refiner fails to correct this deficiency after a request for more information, EPA will not assign an individual refinery motor vehicle diesel fuel volume baseline.

(c) *General requirements for DFR foreign refiners.* A foreign refiner of a refinery that is approved under the diesel foreign refiner program of this subpart must designate each batch of motor vehicle diesel fuel produced at the foreign refinery that is exported to the United States as either Certified DFR-Diesel or as Non-Certified DFR-Diesel, except as provided in paragraph (c)(3) of this section. It must further designate all Certified DFR-Diesel as complying with either the 15 ppm sulfur standard under § 80.520(a)(1) or the 500 ppm sulfur standard under § 80.520(c).

(1) In the case of Certified DFR-Diesel, the foreign refiner must meet all requirements that apply to refiners under this subpart, except that:

(i) For purposes of complying with the compliance option requirements of § 80.530, motor vehicle diesel fuel produced by a foreign refinery must comply separately for each Credit Trading Area of import, as defined in § 80.531(a)(5).

(ii) For purposes of complying with the compliance option requirements of § 80.530, credits obtained from any other refinery or from any importer must have been generated in the same Credit Trading Area as the Credit Trading Area of import of the fuel for which credits are needed to achieve compliance.

(iii) For purposes of generating credits under this subpart, credits shall be generated separately by Credit Trading Area of import and shall be designated by Credit Trading Area of importation and by port of importation.

(2) In the case of Non-Certified DFR-Diesel, the foreign refiner shall meet all the following requirements:

(i) The designation requirements in this section.

(ii) The reporting requirements in this section and § 80.593.

(iii) The product transfer document requirements in this section.

(iv) The prohibitions in this section and § 80.610.

(3)(i) Any foreign refiner that has been approved to produce motor vehicle diesel fuel subject to the diesel foreign refiner program for a foreign refinery under this subpart may elect to classify no diesel fuel imported into the United States as DFR-Diesel provided the foreign refiner notifies EPA of the election no later than November 1 of the prior calendar year.

(ii) An election under paragraph (c)(3)(i) of this section shall be for an entire calendar year and apply to all motor vehicle diesel fuel that is produced by the foreign refinery that is imported into the United States, and shall remain in effect for each succeeding year unless and until the foreign refiner notifies EPA of the termination of the election. The change in election shall take effect at the beginning of the next calendar year.

(d) *Designation, product transfer documents, and foreign refiner certification.* (1) Any foreign refiner of a foreign refinery that has been approved by EPA to produce motor vehicle diesel fuel subject to the diesel foreign refiner program must designate each batch of DFR-Diesel as such at the time the diesel fuel is produced, unless the refiner has elected to classify no diesel fuel exported to the United States as DFR-Diesel under paragraph (c)(3) of this section.

(2) On each occasion when any person transfers custody or title to any DFR-Diesel prior to its being imported into the United States, it must include the following information as part of the product transfer document information in this section:

(i) Identification of the diesel fuel as Certified DFR-Diesel or as Non-Certified DFR-Diesel, and if it is Certified DFR-Diesel, further designation as meeting the 500 ppm sulfur standard under § 80.520(c) or the 15 ppm sulfur standard under § 80.520(a)(1) pursuant to § 80.523; and

(ii) The name and EPA refinery registration number (under § 80.593) of the refinery where the DFR-Diesel was produced.

(3) On each occasion when DFR-Diesel is loaded onto a vessel or other transportation mode for transport to the United States, the foreign refiner shall prepare a certification for each batch of the DFR-Diesel that meets the following requirements.

(i) The certification shall include the report of the independent third party under paragraph (f) of this section, and the following additional information:

(A) The name and EPA registration number of the refinery that produced the DFR-Diesel;

(B) The identification of the diesel fuel as Certified DFR-Diesel or Non-Certified DFR-Diesel;

(C) The volume of DFR-Diesel being transported, in gallons;

(D) In the case of Certified DFR-Diesel:

(*1*) The sulfur content as determined under paragraph (f) of this section, and the designation of the fuel as complying with the 15 ppm sulfur content standard for motor vehicle diesel fuel under § 80.520(a)(1) or the 500 ppm sulfur

content standard for motor vehicle diesel fuel under § 80.520(c); and

(*2*) A declaration that the DFR-Diesel is being included in the applicable compliance calculations required by the EPA under this subpart.

(ii) The certification shall be made part of the product transfer documents for the DFR-Diesel.

(e) *Transfers of DFR-Diesel to non-United States markets.* The foreign refiner is responsible to ensure that all diesel fuel classified as DFR-Diesel is imported into the United States. A foreign refiner may remove the DFR-Diesel classification, and the diesel fuel need not be imported into the United States, but only if:

(1)(i) The foreign refiner excludes:

(A) The volume of diesel from the refinery's compliance report under § 80.593; and

(B) In the case of Certified DFR-Diesel, the volume of the diesel fuel from the compliance report under § 80.593.

(ii) The exclusions under paragraph (e)(1)(i) of this section shall be on the basis of the designations under § 80.523 and volumes determined under paragraph (f) of this section.

(2) The foreign refiner obtains sufficient evidence in the form of documentation that the diesel fuel was not imported into the United States.

(f) *Load port independent sampling, testing and refinery identification.* (1) On each occasion that DFR-Diesel is loaded onto a vessel for transport to the United States a foreign refiner shall have an independent third party:

(i) Inspect the vessel prior to loading and determine the volume of any tank bottoms;

(ii) Determine the volume of DFR-Diesel loaded onto the vessel (exclusive of any tank bottoms before loading);

(iii) Obtain the EPA-assigned registration number of the foreign refinery;

(iv) Determine the name and country of registration of the vessel used to transport the DFR-Diesel to the United States; and

(v) Determine the date and time the vessel departs the port serving the foreign refinery.

(2) On each occasion that Certified DFR-Diesel is loaded onto a vessel for transport to the United States a foreign refiner shall have an independent third party:

(i) Collect a representative sample of the Certified DFR-Diesel from each vessel compartment subsequent to loading on the vessel and prior to departure of the vessel from the port serving the foreign refinery;

(ii) Determine the sulfur content value for each compartment using the methodology specified in § 80.580 by:

(A) The third party analyzing each sample; or

(B) The third party observing the foreign refiner analyze the sample;

(iii) Review original documents that reflect movement and storage of the certified DFR-Diesel from the refinery to the load port, and from this review determine:

(A) The refinery at which the DFR-Diesel was produced; and

(B) That the DFR-Diesel remained segregated from:

(*1*) Non-DFR-Diesel and Non-Certified DFR-Diesel; and

(*2*) Other Certified DFR-Diesel produced at a different refinery.

(3) The independent third party shall submit a report:

(i) To the foreign refiner containing the information required under paragraphs (f)(1) and (f)(2) of this section, to accompany the product transfer documents for the vessel; and

(ii) To the Administrator containing the information required under paragraphs (f)(1) and (f)(2) of this section, within thirty days following the date of the independent third party's inspection. This report shall include a description of the method used to determine the identity of the refinery at which the diesel fuel was produced, assurance that the diesel fuel remained segregated as specified in paragraph (n)(1) of this section, and a description of the diesel fuel's movement and storage between production at the source refinery and vessel loading.

(4) The independent third party must:

(i) Be approved in advance by EPA, based on a demonstration of ability to perform the procedures required in this paragraph (f);

(ii) Be independent under the criteria specified in § 80.65(e)(2)(iii); and

(iii) Sign a commitment that contains the provisions specified in paragraph (i) of this section with regard to activities, facilities and documents relevant to compliance with the requirements of this paragraph (f).

(g) *Comparison of load port and port of entry testing*. (1) Load port and port of entry testing requirements, as follows:

(i) Any foreign refiner and any United States importer of Certified DFR-Diesel shall compare the results from the load port testing under paragraph (f) of this section, with the port of entry testing as reported under paragraph (o) of this section, for the volume of diesel and the sulfur value; except that

(ii) Where a vessel transporting Certified DFR-Diesel off loads this diesel fuel at more than one United States port of entry, and the conditions of paragraph (g)(2)(i) of this section are met at the first United States port of entry, the requirements of paragraph (g)(2) of this section do not apply at subsequent ports of entry if the United States importer obtains a certification from the vessel owner that meets the requirements of paragraph(s) of this section, that the vessel has not loaded any diesel fuel or blendstock between the first United States port of entry and the subsequent port of entry.

(2)(i) The requirements of this paragraph (g)(2) apply if:

(A) The temperature-corrected volumes determined at the port of entry and at the load port differ by more than one percent; or

(B) The sulfur value determined at the port of entry is higher than the sulfur value determined at the load port, and the amount of this difference is greater than the reproducibility amount specified for the port of entry test result by the American Society of Testing and Materials (ASTM).

(ii) The United States importer and the foreign refiner shall treat the diesel fuel as Non-Certified DFR-Diesel, and the foreign refiner shall exclude the diesel fuel volume from its motor vehicle diesel fuel volumes calculations and sulfur standard designations under § 80.523.

(h) *Attest requirements*. Refiners, for each calendar year, must arrange to have an attest engagement performed of the underlying documentation that forms the basis of any report required under this subpart. The attest engagement must comply with the procedures and requirements that apply to refiners under §§ 80.125 through 80.130 and must be submitted to the Administrator of EPA by May 30 of each year for the prior calendar year. The following additional procedures shall be carried out for any foreign refiner of DFR-Diesel:

(1) The inventory reconciliation analysis under § 80.128(b) and the tender analysis under § 80.128(c) shall include Non-DFR-Diesel.

(2) Obtain separate listings of all tenders of Certified DFR-Diesel and of Non-Certified DFR-Diesel, and obtain separate listings of Certified DFR-Diesel based on whether it is 15 ppm sulfur content motor vehicle diesel fuel or 500 ppm sulfur content motor vehicle diesel fuel. Agree the total volume of tenders from the listings to the diesel fuel inventory reconciliation analysis in § 80.128(b), and to the volumes determined by the third party under paragraph (f)(1) of this section.

(3) For each tender under paragraph (h)(2) of this section, where the diesel fuel is loaded onto a marine vessel, report as a finding the name and country of registration of each vessel, and the volumes of DFR-Diesel loaded onto each vessel.

(4) Select a sample from the list of vessels identified in paragraph (h)(3) of this section used to transport Certified DFR-Diesel, in accordance with the guidelines in § 80.127, and for each vessel selected perform the following:

(i) Obtain the report of the independent third party, under paragraph (f) of this section, and of the United States importer under paragraph (o) of this section.

(A) Agree the information in these reports with regard to vessel identification, diesel fuel volumes and sulfur content test results.

(B) Identify, and report as a finding, each occasion the load port and port of entry sulfur content and volume results differ by more than the amounts allowed in paragraph (g) of this section, and determine whether the foreign refiner adjusted its refinery calculations as required in paragraph (g) of this section.

(ii) Obtain the documents used by the independent third party to determine transportation and storage of the Certified DFR-Diesel from the refinery to the load port, under paragraph (f) of this section. Obtain tank activity records for any storage tank where the Certified DFR-Diesel is stored, and pipeline activity records for any pipeline used to transport the Certified DFR-Diesel, prior to being loaded onto the vessel. Use these records to determine whether the Certified DFR-Diesel was produced at the refinery that is the subject of the attest engagement, and whether the Certified DFR-Diesel was mixed with any Non-Certified DFR-Diesel, Non-DFR-Diesel, or any Certified DFR-Diesel produced at a different refinery.

(5) Select a sample from the list of vessels identified in paragraph (h)(3) of this section used to transport certified and Non-Certified DFR-Diesel, in accordance with the guidelines in § 80.127, and for each vessel selected perform the following:

(i) Obtain a commercial document of general circulation that lists vessel arrivals and departures, and that includes the port and date of departure of the vessel, and the port of entry and date of arrival of the vessel.

(ii) Agree the vessel's departure and arrival locations and dates from the independent third party and United States importer reports to the information contained in the commercial document.

(6) Obtain separate listings of all tenders of Non-DFR-Diesel, and perform the following:

(i) Agree the total volume and sulfur content of tenders from the listings to the diesel fuel inventory reconciliation analysis in § 80.128(b).

(ii) Obtain a separate listing of the tenders under this paragraph (h)(6) where the diesel fuel is loaded onto a marine vessel. Select a sample from this listing in accordance with the guidelines in § 80.127, and obtain a commercial document of general circulation that lists vessel arrivals and departures, and that includes the port and date of departure and the ports and dates where the diesel fuel was off loaded for the selected vessels. Determine and report as a finding the country where the diesel fuel was off loaded for each vessel selected.

(7) In order to complete the requirements of this paragraph (h) an auditor shall:

(i) Be independent of the foreign refiner;

(ii) Be licensed as a Certified Public Accountant in the United States and a citizen of the United States, or be approved in advance by EPA based on a demonstration of ability to perform the procedures required in §§ 80.125 through 80.130 and this paragraph (h); and

(iii) Sign a commitment that contains the provisions specified in paragraph (i) of this section with regard to activities and documents relevant to compliance with the requirements of §§ 80.125 through 80.130 and this paragraph (h).

(i) *Foreign refiner commitments.* Any foreign refiner shall commit to and comply with the provisions contained in this paragraph (i) as a condition to being approved for a temporary refiner diesel fuel program option.

(1) Any United States Environmental Protection Agency inspector or auditor must be given full, complete and immediate access to conduct inspections and audits of the foreign refinery.

(i) Inspections and audits may be either announced in advance by EPA, or unannounced.

(ii) Access will be provided to any location where:

(A) Diesel fuel is produced;

(B) Documents related to refinery operations are kept;

(C) Diesel fuel or blendstock samples are tested or stored; and

(D) DFR-Diesel is stored or transported between the foreign refinery and the United States, including storage tanks, vessels and pipelines.

(iii) Inspections and audits may be by EPA employees or contractors to EPA.

(iv) Any documents requested that are related to matters covered by inspections and audits must be provided to an EPA inspector or auditor on request.

(v) Inspections and audits by EPA may include review and copying of any documents related to:

(A) Refinery baseline establishment, if applicable, including the volume and

sulfur content; transfers of title or custody of any diesel fuel or blendstocks whether DFR-Diesel or Non-DFR-Diesel, produced at the foreign refinery during the period January 1, 1998 through the date of the refinery baseline petition or through the date of the inspection or audit if a baseline petition has not been approved, and any work papers related to refinery baseline establishment;

(B) The volume and sulfur content of DFR-Diesel;

(C) The proper classification of diesel fuel as being DFR-Diesel or as not being DFR-Diesel, or as Certified DFR-Diesel or as Non-Certified DFR-Diesel, or as meeting the 15 ppm sulfur standard under § 80.520(a)(1) or the 500 ppm sulfur standard under § 80.520(c);

(D) Transfers of title or custody to DFR-Diesel;

(E) Sampling and testing of DFR-Diesel;

(F) Work performed and reports prepared by independent third parties and by independent auditors under the requirements of this section, including work papers; and

(G) Reports prepared for submission to EPA, and any work papers related to such reports.

(vi) Inspections and audits by EPA may include taking samples of diesel fuel, diesel fuel additives or blendstock, and interviewing employees.

(vii) Any employee of the foreign refiner must be made available for interview by the EPA inspector or auditor, on request, within a reasonable time period.

(viii) English language translations of any documents must be provided to an EPA inspector or auditor, on request, within 10 working days.

(ix) English language interpreters must be provided to accompany EPA inspectors and auditors, on request.

(2) An agent for service of process located in the District of Columbia shall be named, and service on this agent constitutes service on the foreign refiner or any employee of the foreign refiner for any action by EPA or otherwise by the United States related to the requirements of this subpart.

(3) The forum for any civil or criminal enforcement action related to the provisions of this section for violations of the Clean Air Act or regulations promulgated thereunder shall be governed by the Clean Air Act, including the EPA administrative forum where allowed under the Clean Air Act.

(4) United States substantive and procedural laws shall apply to any civil or criminal enforcement action against the foreign refiner or any employee of the foreign refiner related to the provisions of this section.

(5) Submitting a petition for participation in the diesel foreign refiner program or producing and exporting diesel fuel under any such program, and all other actions to comply with the requirements of this subpart relating to participation in any diesel foreign refiner program, or to establish an individual refinery motor vehicle diesel fuel volume baseline (if applicable) constitute actions or activities that satisfy the provisions of 28 U.S.C. section 1605(a)(2), but solely with respect to actions instituted against the foreign refiner, its agents and employees in any court or other tribunal in the United States for conduct that violates the requirements applicable to the foreign refiner under this subpart, including conduct that violates Title 18 U.S.C. section 1001 and Clean Air Act section 113(c)(2).

(6) The foreign refiner, or its agents or employees, will not seek to detain or to impose civil or criminal remedies against EPA inspectors or auditors, whether EPA employees or EPA contractors, for actions performed within the scope of EPA employment related to the provisions of this section.

(7) The commitment required by this paragraph (i) shall be signed by the owner or president of the foreign refiner business.

(8) In any case where DFR-Diesel produced at a foreign refinery is stored or transported by another company between the refinery and the vessel that transports the DFR-Diesel to the United States, the foreign refiner shall obtain from each such other company a commitment that meets the requirements specified in paragraphs (i)(1) through (7) of this section, and these commitments shall be included in the foreign refiner's petition to participate in any diesel foreign refiner program .

(j) *Sovereign immunity*. By submitting a petition for participation in any diesel foreign refiner program under this subpart (and baseline, if applicable) under this section, or by producing and exporting diesel fuel to the United States under any such program, the foreign refiner, and its agents and employees, without exception, become subject to the full operation of the administrative and judicial enforcement powers and provisions of the United States without limitation based on sovereign immunity, with respect to actions instituted against the foreign refiner, its agents and employees in any court or other tribunal in the United States for conduct that violates the requirements applicable to the foreign refiner under this subpart including conduct that violates Title 18 U.S.C. section 1001 and Clean Air Act section 113(c)(2).

(k) *Bond posting*. Any foreign refiner shall meet the requirements of this paragraph (k) as a condition to approval for any diesel foreign refiner program under this subpart.

(1) The foreign refiner shall post a bond of the amount calculated using the following equation:

$$\text{Bond} = G \times \$0.01$$

Where:

Bond = amount of the bond in U.S. dollars.

G = the volume baseline for motor vehicle diesel fuel produced at the foreign refinery and exported to the United States, in gallons.

(2) Bonds shall be posted by:

(i) Paying the amount of the bond to the Treasurer of the United States;

(ii) Obtaining a bond in the proper amount from a third party surety agent that is payable to satisfy United States administrative or judicial judgments against the foreign refiner, provided EPA agrees in advance as to the third party and the nature of the surety agreement; or

(iii) An alternative commitment that results in assets of an appropriate liquidity and value being readily available to the United States, provided EPA agrees in advance as to the alternative commitment.

(3) Bonds posted under this paragraph (k) shall:

(i) Be used to satisfy any judicial judgment that results from an administrative or judicial enforcement action for conduct in violation of this subpart, including where such conduct violates Title 18 U.S.C. 1001 and Clean Air Act section 113(c)(2);

(ii) Be provided by a corporate surety that is listed in the United States Department of Treasury Circular 570 ''Companies Holding Certificates of Authority as Acceptable Sureties on Federal Bonds'' (available from the Department of Treasury website at *http://www.fms.treas.gov* or from the Government Printing Office, phone (202) 512–1800); and

(iii) Include a commitment that the bond will remain in effect for at least five (5) years following the end of latest annual reporting period that the foreign refiner produces motor vehicle diesel fuel pursuant to the requirements of this subpart.

(4) On any occasion a foreign refiner bond is used to satisfy any judgment, the foreign refiner shall increase the bond to cover the amount used within 90 days of the date the bond is used.

(5) If the bond amount for a foreign refiner increases, the foreign refiner shall increase the bond to cover the shortfall within 90 days of the date the bond amount changes. If the bond amount decreases, the foreign refiner may reduce the amount of the bond beginning 90 days after the date the bond amount changes.

(l) [Reserved]

(m) *English language reports*. Any report or other document submitted to EPA by a foreign refiner shall be in English language, or shall include an English language translation.

(n) *Prohibitions*. (1) No person may combine Certified DFR-Diesel with any Non-Certified DFR-Diesel or Non-DFR-Diesel, and no person may combine Certified DFR-Diesel with any Certified DFR-Diesel produced at a different refinery, until the importer has met all the requirements of paragraph (o) of this section, except as provided in paragraph (e) of this section.

(2) No foreign refiner or other person may cause another person to commit an action prohibited in paragraph (n)(1) of this section, or that otherwise violates the requirements of this section.

(o) *United States importer requirements.* Any United States importer shall meet the following requirements:

(1) Each batch of imported motor vehicle diesel fuel shall be classified by the importer as being DFR-Diesel or as Non-DFR-Diesel, and each batch classified as DFR-Diesel shall be further classified as Certified DFR-Diesel or as Non-certified DFR-Diesel, and each batch of Certified DFR-Diesel shall be further classified as complying with the 500 ppm motor vehicle diesel fuel sulfur standard under § 80.520(c) or the 15 ppm motor vehicle diesel fuel sulfur standard under § 80.520(a)(1).

(2) Motor vehicle diesel fuel shall be classified as Certified DFR-Diesel or as Non-Certified DFR-Diesel according to the designation by the foreign refiner if this designation is supported by product transfer documents prepared by the foreign refiner as required in paragraph (d) of this section, unless the diesel fuel is classified as Non-Certified DFR-Diesel under paragraph (g) of this section. Additionally, the importer shall comply with all requirements of this subpart applicable to domestic refiners subject to any diesel foreign refiner program under this subpart.

(3) For each diesel fuel batch classified as DFR-Diesel, any United States importer shall perform the following procedures:

(i) In the case of both Certified and Non-Certified DFR-Diesel, have an independent third party:

(A) Determine the volume of diesel fuel in the vessel;

(B) Use the foreign refiner's DFR-Diesel certification to determine the name and EPA-assigned registration number of the foreign refinery that produced the DFR-Diesel;

(C) Determine the name and country of registration of the vessel used to transport the DFR-Diesel to the United States; and

(D) Determine the date and time the vessel arrives at the United States port of entry.

(ii) In the case of Certified DFR-Diesel, have an independent third party:

(A) Collect a representative sample from each vessel compartment subsequent to the vessel's arrival at the United States port of entry and prior to off loading any diesel fuel from the vessel;

(B) Obtain the compartment samples; and

(C) Determine the sulfur value of each compartment sample using the methodologies specified in § 80.580, by:

(*1*) The third party analyzing the sample; or

(*2*) The third party observing the importer analyze the sample.

(4) Any importer shall submit reports within thirty days following the date any vessel transporting DFR-Diesel arrives at the United States port of entry:

(i) To the Administrator containing the information determined under paragraph (o)(3) of this section; and

(ii) To the foreign refiner containing the information determined under paragraph (o)(3)(ii) of this section, and including identification of the port and Credit Trading Area at which the product was offloaded.

(5) Any United States importer shall meet the requirements specified in § 80.520, for any imported motor vehicle diesel fuel that is not classified as Certified DFR-Diesel under paragraph (o)(2) of this section.

(p) *Truck Imports of Certified DFR-Diesel produced at a Foreign Refinery.* (1) Any refiner whose Certified DFR-Diesel is transported into the United States by truck may petition EPA to use alternative procedures to meet the following requirements:

(i) Certification under paragraph (d)(5) of this section;

(ii) Load port and port of entry sampling and testing under paragraphs (f) and (g) of this section;

(iii) Attest under paragraph (h) of this section; and

(iv) Importer testing under paragraph (o)(3) of this section.

(2) These alternative procedures must ensure Certified DFR-Diesel remains segregated from Non-Certified DFR-Diesel and from Non-DFR-Diesel until it is imported into the United States. The petition will be evaluated based on whether it adequately addresses the following:

(i) Provisions for monitoring pipeline shipments, if applicable, from the refinery, that ensure segregation of Certified DFR-Diesel from that refinery from all other diesel fuel;

(ii) Contracts with any terminals and/or pipelines that receive and/or transport Certified DFR-Diesel, that prohibit the commingling of Certified DFR-Diesel with any of the following:

(A) Other Certified DFR-Diesel from other refineries.

(B) All Non-Certified DFR-Diesel.

(C) All Non-DFR-Diesel;

(iii) Procedures for obtaining and reviewing truck loading records and United States import documents for Certified DFR-Diesel to ensure that such diesel fuel is only loaded into trucks making deliveries to the United States;

(iv) Attest procedures to be conducted annually by an independent third party that review loading records and import documents based on volume reconciliation, or other criteria, to confirm that all Certified DFR-Diesel remains segregated throughout the distribution system and is only loaded into trucks for import into the United States.

(3) The petition required by this section must be submitted to EPA along with the application for temporary refiner relief individual refinery highway diesel sulfur standard under this subpart I and this section.

(q) *Withdrawal or suspension of a foreign refinery's temporary refinery flexibility program approval.* EPA may withdraw or suspend a diesel refiner temporary compliance option diesel fuel sulfur program approval for a foreign refinery where:

(1) A foreign refiner fails to meet any requirement of this section;

(2) A foreign government fails to allow EPA inspections as provided in paragraph (i)(1) of this section;

(3) A foreign refiner asserts a claim of, or a right to claim, sovereign immunity in an action to enforce the requirements in this subpart; or

(4) A foreign refiner fails to pay a civil or criminal penalty that is not satisfied using the foreign refiner bond specified in paragraph (k) of this section.

(r) *Early use of a foreign refiner baseline.* (1) A foreign refiner may begin using an individual refinery baseline before EPA has approved the baseline, provided that:

(i) A baseline petition has been submitted as required in paragraph (b) of this section;

(ii) EPA has made a provisional finding that the baseline petition is complete;

(iii) The foreign refiner has made the commitments required in paragraph (i) of this section;

(iv) The persons who will meet the independent third party and independent attest requirements for the foreign refinery have made the commitments required in paragraphs (f)(3)(iii) and (h)(7)(iii) of this section; and

(v) The foreign refiner has met the bond requirements of paragraph (k) of this section.

(2) In any case where a foreign refiner uses an individual refinery baseline before final approval under paragraph (r)(1) of this section, and the foreign refinery baseline values that ultimately are approved by EPA are more stringent than the early baseline values used by the foreign refiner, the foreign refiner shall recalculate its compliance, ab initio, using the baseline values approved by the EPA, and the foreign refiner shall be liable for any resulting violation of the motor vehicle highway diesel fuel requirements.

(s) *Additional requirements for petitions, reports and certificates.* Any petition for approval to produce motor vehicle diesel fuel subject to the diesel foreign refiner program, any alternative procedures under paragraph (p) of this section, any report or other submission required by paragraph (c), (f)(2), or (i) of this section, and any certification under paragraph (d)(3) of this section shall be:

(1) Submitted in accordance with procedures specified by the Administrator, including use of any forms that may be specified by the Administrator.

(2) Be signed by the president or owner of the foreign refiner company, or by that person's immediate designee, and shall contain the following declaration:

I hereby certify: (1) that I have actual authority to sign on behalf of and to bind [insert name of foreign refiner] with regard to all statements contained herein; (2) that I am aware that the information contained herein is being certified, or submitted to the United States Environmental Protection Agency, under the requirements of 40 CFR Part 80, subpart I, and that the information is material for determining compliance under these regulations; and (3) that I have read and understand the information being certified or submitted, and this information is true, complete and correct to the best of my knowledge and belief after I have taken reasonable and appropriate steps to verify the accuracy thereof.

I affirm that I have read and understand the provisions of 40 CFR Part 80, subpart I, including 40 CFR 80.620 apply to [insert name of foreign refiner]. Pursuant to Clean Air Act section 113(c) and Title 18, United States Code, section 1001, the penalty for furnishing false, incomplete or misleading information in this certification or submission is a fine of up to $10,000 U.S., and/or imprisonment for up to five years.

Subpart J—Gasoline Toxics

GENERAL INFORMATION

SOURCE: 66 FR 17263, Mar. 29, 2001, unless otherwise noted.

§§ 80.800–80.805 [Reserved]

§ 80.810 Who shall register with EPA under the gasoline toxics program?

(a) Refiners and importers who are registered by EPA under § 80.76 are deemed to be registered for purposes of this subpart.

(b) Refiners and importers subject to the standards in § 80.815 who are not registered by EPA under § 80.76 shall provide to EPA the information required by § 80.76 by October 1, 2001, or not later than three months in advance of the first date that such person produces or imports gasoline, whichever is later.

GASOLINE TOXICS PERFORMANCE REQUIREMENTS

§ 80.815 What are the gasoline toxics performance requirements for refiners and importers?

(a)(1) The gasoline toxics performance requirements of this subpart require that the annual average toxics value of a refinery or importer be compared to that refinery's or importer's compliance baseline, where compliance has been achieved if—

(i) For conventional gasoline, the annual average toxics value is less than or equal to the compliance baseline;

(ii) For reformulated gasoline and RBOB, combined, the annual average toxics value is greater than or equal to the compliance baseline.

(A) Refineries that only produce RBOB and importers that only import RBOB shall treat RBOB as reformulated gasoline for the purposes of determining compliance with the requirements of this subpart.

(B) Refineries that produce both RFG and RBOB and importers that import both RFG and RBOB must combine any RFG and RBOB qualities and volumes for the purposes of determining compliance with the requirements of this subpart.

(2) The requirements under this paragraph (a) shall be met by the importer for all imported gasoline, except gasoline imported as Certified Toxics-FRGAS under § 80.1030.

(b) The gasoline toxics requirements of this subpart apply separately for each of the following types of gasoline produced at a refinery or imported:

(1) Reformulated gasoline and RBOB, combined;

(2) Conventional gasoline.

(c) *Compliance baseline.* (1) The compliance baseline of a refinery or importer is determined in accordance with § 80.915 or § 80.855, as applicable.

(2) Refiners who have chosen, under subpart E of this part, to comply with the requirements of subpart E of this part on an aggregate basis, shall comply with the requirements of this subpart on the same aggregate basis.

(d) *Compliance determination.* (1) The gasoline toxics performance requirements of this subpart apply to gasoline produced at a refinery or imported by an importer during each calendar year starting January 1, 2002. The averaging period is January 1 through December 31 of each year.

(2) The annual average toxics value is calculated in accordance with § 80.825.

(e) *Deficit carryforward.* (1) A refinery or importer creates a toxics deficit, separately for reformulated gasoline

and conventional gasoline, for a given averaging period, when—

(i) For conventional gasoline, its annual average toxics value is greater than the compliance baseline;

(ii) For reformulated gasoline and RBOB, combined, the annual average toxics value is less than the compliance baseline.

(2) In the calendar year following the year the toxics deficit is created, the refinery or importer shall:

(i) Achieve compliance with the refinery or importer toxics performance requirement specified in paragraph (a) of this section; and

(ii) Generate additional toxics credits sufficient to offset the toxics deficit of the previous year.

(f) *Credit carryforward.* (1) A refinery or importer generates toxics credits, separately for reformulated gasoline and conventional gasoline, for a given averaging period, when—

(i) For conventional gasoline, its annual average toxics value is less than the compliance baseline;

(ii) For reformulated gasoline and RBOB, combined, the annual average toxics value is greater than the compliance baseline.

(2) Toxics credits may be used to offset a toxics deficit in the calendar year following the year the credits are generated, provided the following criteria are met:

(i) Reformulated gasoline toxics credits are only to be used to offset a reformulated gasoline toxics deficit; conventional gasoline credits are only to be used to offset a conventional gasoline toxics deficit.

(ii) A refiner only offsets a toxics deficit at a refinery with toxics credits generated by that refinery.

(iii) Credits generated on an aggregate basis may only be used to offset a deficit calculated on an aggregate basis.

(iv) Credits used to offset a deficit from the previous year may not also be carried forward to the following year. Credits in excess of those used to offset a deficit from the previous year may be used to offset a deficit in the following year.

(v) Only toxics credits generated under this subpart may be used to offset a toxics deficit created under this subpart.

§ 80.820 What gasoline is subject to the toxics performance requirements of this subpart?

For the purpose of this subpart, all reformulated gasoline, conventional gasoline and RBOB, collectively called ''gasoline'' unless otherwise specified, is subject to the requirements under this subpart, as applicable, with the following exceptions:

(a) Gasoline that is used to fuel aircraft, racing vehicles or racing boats that are used only in sanctioned racing events, provided that:

(1) Product transfer documents associated with such gasoline, and any pump stand from which such gasoline is dispensed, identify the gasoline either as gasoline that is restricted for use in aircraft, or as gasoline that is restricted for use in racing motor vehicles or racing boats that are used only in sanctioned racing events;

(2) The gasoline is completely segregated from all other gasoline throughout production, distribution and sale to the ultimate consumer; and

(3) The gasoline is not made available for use as motor vehicle gasoline, or dispensed for use in motor vehicles, except for motor vehicles used only in sanctioned racing events.

(b) Gasoline that is exported for sale outside the U.S.

(c) Gasoline designated as California gasoline under § 80.845, and used in California.

(d) Gasoline used in American Samoa, Guam and the Commonwealth of the Northern Mariana Islands.

(e) Gasoline exempt per § 80.995.

(f) Gasoline exempt per § 80.1000.

§ 80.825 How is the refinery or importer annual average toxics value determined?

(a) The refinery or importer annual average toxics value is calculated as follows:

$$T_a = \frac{\sum_{i=1}^{n} (V_i \times T_i)}{\sum_{i=1}^{n} V_i}$$

Where:

T_a = The refinery or importer annual average toxics value, as applicable.

V_i = The volume of applicable gasoline produced or imported in batch i.

T_i = The toxics value of batch i.

n = The number of batches of gasoline produced or imported during the averaging period.

i = Individual batch of gasoline produced or imported during the averaging period.

(b) The calculation specified in paragraph (a) of this section shall be made separately for each type of gasoline specified at § 80.815(b).

(c) The toxics value, T_i, of each batch of gasoline is determined using the Phase II Complex Model specified at § 80.45.

(1) The toxics value, T_i, of each batch of reformulated gasoline or RBOB, and the annual average toxics value, T_a, for reformulated gasoline and RBOB, combined, under this subpart are in percent reduction from the statutory baseline described in § 80.45(b) and volumes are in gallons.

(2) The toxics value, T_i, of each batch of conventional gasoline, and the annual average toxics value, T_a, for conventional gasoline under this subpart are in milligrams per mile (mg/mile) and volumes are in gallons.

(d) All refinery or importer annual average toxics value calculations shall be conducted to two decimal places.

(e) A refiner or importer may include oxygenate added downstream from the refinery or import facility when calculating the toxics value, provided the following requirements are met:

(1) For oxygenate added to conventional gasoline, the refiner or importer shall comply with the requirements of § 80.101(d)(4)(ii).

(2) For oxygenate added to RBOB, the refiner or importer shall comply with the requirements of § 80.69(a).

(f) *Gasoline excluded.* Refiners and importers shall exclude from compliance calculations all of the following:

(1) Gasoline that was not produced at the refinery;

(2) In the case of an importer, gasoline that was imported as Certified Toxics-FRGAS under § 80.1030;

(3) Blending stocks transferred to others;

(4) Gasoline that has been included in the compliance calculations for another refinery or importer; and

(5) Gasoline exempted from standards under § 80.820.

§ 80.830 What requirements apply to oxygenate blenders?

Oxygenate blenders who blend oxygenate into gasoline downstream of the refinery that produced the gasoline or the import facility where the gasoline was imported are not subject to the requirements of this subpart applicable to refiners for this gasoline.

§ 80.835 What requirements apply to butane blenders?

Butane blenders who blend butane into gasoline downstream of the refinery that produced the gasoline or the import facility where the gasoline was imported are not subject to the requirements of this subpart applicable to refiners for this gasoline.

§ 80.840 [Reserved]

§ 80.845 What requirements apply to California gasoline?

(a) *Definition.* For purposes of this subpart ''California gasoline'' means any gasoline designated by the refiner or importer as for use in California.

(b) *California gasoline exemption.* California gasoline that complies with all the requirements of this section is exempt from all other provisions of this subpart.

(c) *Requirements for California gasoline.* (1) Each batch of California gasoline shall be designated as such by its refiner or importer.

(2) [Reserved]

(3) Designated California gasoline must ultimately be used in the State of California and not used elsewhere.

(4) In the case of California gasoline produced outside the State of California, the transferors and transferees shall meet the product transfer document requirements under § 80.81(g).

(5) Gasoline that is ultimately used in any part of the United States outside of the State of California shall comply with the standards and requirements of this subpart, regardless of any designation as California gasoline.

§ 80.850 How is the compliance baseline determined?

(a) The compliance baseline to which annual average toxics values are compared according to § 80.815(a) is calculated according to the following equation:

$$T_{CBase} = \frac{T_{Base} \times V_{Base} + T_{Exist} \times V_{inc}}{V_{Base} + V_{inc}}$$

Where:

T_{CBase} = Compliance baseline toxics value.

T_{Base} = Baseline toxics value for the refinery or importer, calculated according to § 80.915(b)(1).

V_{Base} = Baseline volume for the refinery or importer, calculated according to § 80.915(b)(2).

T_{Exist} = Existing toxics standard, per paragraph (b) of this section.

V_{inc} = Volume of gasoline produced during the averaging period in excess of V_{Base}.

(b) The value of existing toxics standard, T_{Exist}, is equal to:

(1) 21.5 percent, for reformulated gasoline and RBOB, combined;

(2) The refinery's or importer's antidumping compliance baseline value for exhaust toxics, in mg/mi, per § 80.101(f), for conventional gasoline.

(c) If the refinery or importer produced less gasoline during the compliance period than its baseline volume V_{Base}, the value of V_{inc} will be zero.

§ 80.855 What is the compliance baseline for refineries or importers with insufficient data?

(a) A refinery or importer shall use the methodology specified in this section for determining a compliance baseline if it cannot determine an applicable toxics value for every batch of gasoline produced or imported for 12 or more consecutive months during January 1, 1998 through December 31, 2000.

(b)(1) A refinery or importer that cannot determine an applicable toxics value on every batch of gasoline produced or imported for 12 or more consecutive months during the period January 1, 1998 through December 31, 2000 or a refinery or importer that did not produce or import reformulated gasoline and/or RBOB (combined) or conventional gasoline or both during the period between January 1, 1998 and December 31, 2000, inclusive, shall have the following as its compliance baseline for the purposes of this subpart:

(i) For conventional gasoline, 94.64 mg/mile.

(ii) For reformulated gasoline, 26.71 percent reduction from statutory baseline.

(2) By October 31, 2001, EPA will revise by regulation the default baseline values specified in paragraph (b)(1) of this section to reflect the final 1998–2000 average toxics values.

§§ 80.860–80.905 [Reserved]

BASELINE DETERMINATION

§ 80.910 How does a refiner or importer apply for a toxics baseline?

(a) A refiner or importer shall submit an application to EPA which includes the information required under paragraph (c) of this section no later than June 30, 2001 or 3 months prior to the first introduction of gasoline into commerce from the refinery or by the importer, whichever is later.

(b) The toxics baseline request shall be sent to: U.S. EPA, Attn: Toxics Program (6406J), 1200 Pennsylvania Ave., NW, Washington, DC 20460. For commercial (non-postal) delivery: U.S. EPA, Attn: Toxics Program, 501 3rd Street NW, Washington, DC 20001.

(c) The toxics baseline application shall include the following information:

(1) A listing of the names and addresses of all refineries owned by the company for which the refiner is applying for a toxics baseline, or the name and address of the importer applying for a toxics baseline.

(2) For each refinery and importer—

(i) The baseline toxics value for each type of gasoline, per § 80.815(b), calculated in accordance with § 80.915;

(ii) The baseline toxics volume for each type of gasoline, per § 80.815(b), calculated in accordance with § 80.915;

(iii) For those with insufficient data pursuant to § 80.855, a statement that the refinery's or importer's baseline toxics value is the default compliance baseline specified at § 80.855(b), and that its baseline toxics volume is zero.

(3) A letter signed by the president, chief operating or chief executive officer, of the company, or his/her delegate, stating that the information contained in the toxics baseline determination is true to the best of his/her knowledge.

(4) Name, address, phone number, facsimile number and E-mail address of a company contact person.

(5) The following information for each batch of gasoline produced or imported during the period 1998–2000, separately for each type of gasoline listed at § 80.815(b):

(i) Batch number assigned to the batch under § 80.65(d) or § 80.101(i);

(ii) Volume; and

(iii) Applicable toxics value determined as specified at § 80.915(c).

(d) Foreign refiners shall follow the procedures specified in § 80.1030(b) to establish individual toxics baseline values for a foreign refinery.

(e) By October 31, 2001, or 4 months after the submission date, whichever is later, EPA will notify the submitter of approval of its toxics baseline.

(f) If at any time the baseline submitted in accordance with the requirements of this section is determined to be incorrect, the corrected baseline applies ab initio and the annual average toxics requirements are deemed to be those applicable under the corrected information.

§ 80.915 How are the baseline toxics value and baseline toxics volume determined?

(a)(1) A refinery or importer shall use the methodology specified in this section for determining a baseline toxics value if it can determine an applicable toxics value for every batch of gasoline produced or imported for 12 or more consecutive months during January 1, 1998 through December 31, 2000.

(2) The determination in paragraph (a)(1) of this section is made separately for each type of gasoline listed at § 80.815(b) produced or imported between January 1, 1998 and December 31, 2000, inclusive.

(3) All consecutive and non-consecutive batch toxics measurements between January 1, 1998 and December 31, 2000, inclusive, are to be included in the baseline determination, unless the refinery or importer petitions EPA to exclude such data on the basis of data quality, per § 80.91(d)(6), and receives permission from EPA to exclude such data.

(b)(1) A refinery's or importer's baseline toxics value is calculated using the following equation:

$$T_{Base} = \frac{\sum_{i=1}^{n} (V_i \times T_i)}{\sum_{i=1}^{n} V_i} + M$$

Where:

T_{Base} = Baseline toxics value.

V_i = Volume of gasoline batch i produced or imported between January 1, 1998 and December 31, 2000, inclusive.

T_i = Toxics value of gasoline batch i produced or imported between January 1, 1998 and December 31, 2000, inclusive.

i = Individual batch of gasoline produced or imported between January 1, 1998 and December 31, 2000, inclusive.

n = Total number of batches of gasoline produced or imported between January 1, 1998 and December 31, 2000, inclusive.

M = Compliance margin.

(2) A refinery's or importer's baseline toxics volume is calculated using the following equation:

$$V_{base} = \frac{\sum_{i=1}^{n} V_i}{Y}$$

Where:

V_{base} = Baseline toxics volume.

V_i = Volume of gasoline batch i produced or imported between January 1, 1998 and December 31, 2000, inclusive.

i = Individual batch of gasoline produced or imported between January 1, 1998 and December 31, 2000, inclusive.

n = Total number of batches of gasoline produced or imported between January 1, 1998 and December 31, 2000, inclusive.

Y = Number of years between 1998 and 2000, inclusive, during some or all of which the refinery produced, or the importer imported, gasoline.

(c) The calculation specified in paragraph (b) of this section shall be made separately for each type of gasoline listed at § 80.815(b).

(d) The toxics value, T_i, of each batch of gasoline is determined using the Phase II Complex Model specified at § 80.45.

(1) The toxics value, T_i, of each batch of reformulated gasoline or RBOB, and the baseline toxics value, T_{Base}, for reformulated gasoline and RBOB, combined, under this subpart are in percent reduction from the statutory baseline defined in 40 CFR 80.45(b) and volumes are in gallons.

(2) The toxics value, T_i, of each batch of conventional gasoline, and the baseline toxics value, T_{Base}, for conventional gasoline under this subpart are in milligrams per mile (mg/mile) and volumes are in gallons.

(e) All refinery or importer baseline toxics value calculations shall be conducted to two decimal places.

(f) Any refinery for which oxygenate blended downstream was included in compliance calculations for 1998–2000, pursuant to § 80.65 or § 80.101(d)(4), shall include this oxygenate in the baseline calculations for toxics value under paragraph (a) of this section.

(g) *Baseline adjustment.* (1) A toxics baseline determined differently than described in paragraphs (a) through (e) of this section may be allowed upon petition by the refiner or importer and approval by the Administrator or designee. The petition must be included with the baseline submittal under § 80.910.

(2) A toxics baseline adjustment petition shall, at minimum, be accompanied by:

(i) Unadjusted and adjusted baseline fuel parameters, applicable toxics values, and volumes; and

(ii) A narrative describing how the circumstances during 1998–2000 materially affected the baseline toxics value calculated under paragraph (a) of this section. The narrative shall also describe and show the calculations, and the reasoning supporting the calculations, used to determine the adjusted values.

(h) The compliance margin, M, that will be added to the toxics baseline calculated according to paragraph (a) of this section shall be equal to:

(1) −0.7% for reformulated gasoline or RBOB;

(2) 2.5 mg/mile for conventional gasoline.

§§ 80.920–80.980 [Reserved]

Recordkeeping and Reporting Requirements

§ 80.985 What records shall be kept?

(a) The recordkeeping requirements specified under § 80.74 applicable to refiners and importers of reformulated gasoline, RBOB and/or conventional gasoline apply under this subpart, however, duplicate records are not required.

(b) *Additional records that refiners and importers shall keep.* Beginning January 1, 2002, any refiner for each of its refineries, and any importer for the gasoline it imports, shall keep records that include the following information:

(1) The calculations used to determine the applicable compliance baseline under § 80.915.

(2) The calculations used to determine compliance with the applicable toxics requirements per § 80.815.

(3) A copy of all reports submitted to EPA under § 80.990, however, duplicate records are not required.

(c) *Additional records importers shall keep.* Any importer shall keep records that identify and verify the source of each batch of Certified Toxics-FRGAS and Non-Certified Toxics-FRGAS imported and demonstrate compliance with the requirements for importers under § 80.1030(o).

(d) *Length of time records shall be kept.* The records required in this section shall be kept for five years from the date they were created.

(e) *Make records available to EPA.* On request by EPA the records required in paragraphs (a), (b) and (c) of this section shall be provided to the Administrator's authorized representative. For records that are electronically generated or maintained the equipment and software necessary to read the records shall be made available, or

upon approval by EPA, electronic records shall be converted to paper documents which shall be provided to the Administrator's authorized representative.

§ 80.990 What are the toxics reporting requirements?

Beginning with the 2002 averaging period, and continuing for each averaging period thereafter, any refiner or importer shall submit to EPA the information required in this section, and such other information as EPA may require.

(a) *Refiner and importer annual reports.* Any refiner, for each of its refineries and/or aggregate(s) of refineries, and any importer for the gasoline it imports, shall:

(1) Include in its reformulated gasoline toxics emissions performance averaging report per § 80.75(e) the compliance baseline and incremental volume, V_{inc}, for its reformulated gasoline and RBOB, combined, per § 80.850.

(2) Include in its conventional gasoline report per § 80.105 the compliance baseline and incremental volume, V_{inc}, for its conventional gasoline per § 80.850.

(3) Exclude Certified Toxics-FRGAS under § 80.1030, if an importer.

(b) *Additional reporting requirements for importers.* Any importer shall report the following information for Toxics-FRGAS imported during the averaging period:

(1) The EPA refiner and refinery registration numbers of each foreign refiner and refinery where the Certified Toxics-FRGAS was produced; and

(2) The total gallons of Certified Toxics-FRGAS and Non-Certified Toxics-FRGAS imported from each foreign refiner and refinery.

EXEMPTIONS

§ 80.995 What if a refiner or importer is unable to produce gasoline conforming to the requirements of this subpart?

In appropriate extreme and unusual circumstances (e.g., natural disaster or Act of God) which are clearly outside the control of the refiner or importer and which could not have been avoided by the exercise of prudence, diligence, and due care, EPA may permit a refiner or importer, for a brief period, to not meet the requirements of this subpart, separately for reformulated gasoline (and RBOB, combined) and conventional gasoline, provided the refiner or importer meets all the criteria, requirements and conditions contained in § 80.73 (a) through (e).

§ 80.1000 What are the requirements for obtaining an exemption for gasoline used for research, development or testing purposes?

Gasoline used for research, development or testing purposes is exempt from the requirements of this subpart if it is exempted for these purposes under the reformulated and conventional gasoline programs, as applicable.

VIOLATION PROVISIONS

§ 80.1005 What acts are prohibited under the gasoline toxics program?

No person shall:

(a) *Averaging violation.* Produce or import gasoline subject to this subpart that does not comply with the applicable toxics requirement under § 80.815.

(b) *Causing an averaging use violation.* Cause another person to commit an act in violation of paragraph (a) of this section.

§ 80.1010 [Reserved]

§ 80.1015 Who is liable for violations under the gasoline toxics program?

(a) *Persons liable for violations of prohibited acts*—(1) *Averaging violation.* Any person who violates § 80.1005(a) is liable for the violation.

(2) *Causing an averaging violation.* Any person who causes another party to violate § 80.1005(a), is liable for a violation of § 80.1005(b).

(3) *Parent corporation liability.* Any parent corporation is liable for any violations of this subpart that are committed by any of its wholly-owned subsidiaries.

(b) *Persons liable for failure to meet other provisions of this subpart.* (1) Any person who fails to meet a provision of this subpart not addressed in paragraph (a) of this section is liable for a violation of that provision.

(2) Any person who causes another party to fail to meet a requirement of

this subpart not addressed in paragraph (a) of this section, is liable for causing a violation of that provision.

§ 80.1020 [Reserved]

§ 80.1025 What penalties apply under this subpart?

(a) Any person liable for a violation under § 80.1015 is subject to civil penalties as specified in sections 205 and 211(d) of the Clean Air Act for every day of each such violation and the amount of economic benefit or savings resulting from each violation.

(b) Any person liable under § 80.1015(a) for a violation of the applicable toxics requirements or causing another party to violate the requirements during any averaging period, is subject to a separate day of violation for each and every day in the averaging period.

(c) Any person liable under § 80.1015(b) for failure to meet, or causing a failure to meet, a provision of this subpart is liable for a separate day of violation for each and every day such provision remains unfulfilled.

PROVISIONS FOR FOREIGN REFINERS WITH INDIVIDUAL TOXICS BASELINES

§ 80.1030 What are the requirements for gasoline produced at foreign refineries having individual refiner toxics baselines?

(a) *Definitions.* (1) A *foreign refinery* is a refinery that is located outside the United States, the Commonwealth of Puerto Rico, the Virgin Islands, Guam, American Samoa, and the Commonwealth of the Northern Mariana Islands (collectively referred to in this section as ''the United States'').

(2) A *foreign refiner* is a person who meets the definition of refiner under § 80.2(i) for a foreign refinery.

(3) *Toxics-FRGAS* means gasoline produced at a foreign refinery that has been assigned an individual refinery toxics baseline under § 80.915 and that is imported into the U.S.

(4) *Non-Toxics-FRGAS* means gasoline that is produced at a foreign refinery that has not been assigned an individual refinery toxics baseline, gasoline produced at a foreign refinery with an individual refinery toxics baseline that is not imported into the United States, and gasoline produced at a foreign refinery with an individual toxics baseline during a year when the foreign refiner has opted to not participate in the Toxics-FRGAS program under paragraph (c)(3) of this section.

(5) *Certified Toxics-FRGAS* means Toxics-FRGAS the foreign refiner intends to include in the foreign refinery's toxics compliance calculations under § 80.825, and does include in these compliance calculations when reported to EPA.

(6) *Non-Certified Toxics-FRGAS* means Toxics-FRGAS that is not Certified Toxics-FRGAS.

(b) *Baseline establishment.* Any foreign refiner may submit a petition to the Administrator for an individual refinery toxics baseline pursuant to § 80.915 for all gasoline that was produced at the foreign refinery and imported into the United States between January 1, 1998 and December 31, 2000.

(1) The refiner shall follow the procedures specified in §§ 80.91 through 80.93 to establish an anti-dumping baseline, if it does not already have such a baseline.

(2) In making determinations for foreign refinery baselines, EPA will consider all information supplied by a foreign refiner, and in addition may rely on any and all appropriate assumptions necessary to make such determinations.

(3)(i) Where a foreign refiner submits a petition that is incomplete or inadequate to establish an accurate toxics baseline, and the refiner fails to cure this defect after a request for more information, EPA will not assign an individual refinery toxics baseline.

(ii) If a foreign refiner does not already have an anti-dumping individual baseline per § 80.94, and if pursuant to § 80.94(b)(5) EPA does not assign an individual anti-dumping baseline, EPA will also not assign an individual refinery toxics baseline.

(c) *General requirements for foreign refiners with individual refinery toxics baselines.* A foreign refiner of a refinery that has been assigned an individual toxics baseline according to § 80.915 shall designate all gasoline produced at the foreign refinery that is exported to the United States as either Certified Toxics-FRGAS or as Non-Certified

Toxics-FRGAS, except as provided in paragraph (c)(3) of this section.

(1) In the case of Certified Toxics-FRGAS, the foreign refiner shall meet all provisions that apply to refiners under this subpart J.

(2) In the case of Non-Certified Toxics-FRGAS, the foreign refiner shall meet all the following provisions, except the foreign refiner shall use the name Non-Certified Toxics-FRGAS instead of the names ''reformulated gasoline'' or ''RBOB'' wherever they appear in the following provisions:

(i) The designation requirements in this section.

(ii) The recordkeeping requirements under § 80.985.

(iii) The reporting requirements in § 80.990 and this section.

(iv) The product transfer document requirements in this section.

(v) The prohibitions in this section and § 80.1005.

(vi) The independent audit requirements under § 80.1035, paragraph (h) of this section, §§ 80.125 through 80.127, § 80.128(a), (b), (c), (g) through (i), and § 80.130.

(3)(i) Any foreign refiner that has been assigned an individual toxics baseline for a foreign refinery under § 80.915 may elect to classify no gasoline imported into the United States as Toxics-FRGAS, provided the foreign refiner notifies EPA of the election no later than November 1 of the prior calendar year.

(ii) An election under paragraph (c)(3)(i) of this section shall:

(A) Apply to an entire calendar year averaging period, and apply to all gasoline produced during the calendar year at the foreign refinery that is used in the United States; and

(B) Remain in effect for each succeeding calendar year averaging period, unless and until the foreign refiner notifies EPA of a termination of the election. The change in election shall take effect at the beginning of the next calendar year.

(4) In the case of information required under this section which would duplicate information submitted in accordance with § 80.94, the refiner may indicate that such information is also submitted in accordance with the requirements of this section. Duplicate submissions are not required.

(d) *Designation, product transfer documents, and foreign refiner certification.* (1) Any foreign refiner of a foreign refinery that has been assigned an individual toxics baseline shall designate each batch of Toxics-FRGAS as such at the time the gasoline is produced, unless the refiner has elected to classify no gasoline exported to the United States as Toxics-FRGAS under paragraph (c)(3)(i) of this section.

(2) On each occasion when any person transfers custody or title to any Toxics-FRGAS prior to its being imported into the United States, it shall include the following information as part of the product transfer document information in this section:

(i) Identification of the gasoline as Certified Toxics-FRGAS or as Non-Certified Toxics-FRGAS; and

(ii) The name and EPA refinery registration number of the refinery where the Toxics-FRGAS was produced.

(3) On each occasion when Toxics-FRGAS is loaded onto a vessel or other transportation mode for transport to the United States, the foreign refiner shall prepare a written verification for each batch of the Toxics-FRGAS that meets the following requirements:

(i) The verification shall include the report of the independent third party under paragraph (f) of this section, and the following additional information:

(A) The name and EPA registration number of the refinery that produced the Toxics-FRGAS;

(B) The identification of the gasoline as Certified Toxics-FRGAS or Non-Certified Toxics-FRGAS;

(C) The volume of Toxics-FRGAS being transported, in gallons;

(D) In the case of Certified Toxics-FRGAS:

(*1*) The toxics value as determined under paragraph (f) of this section; and

(*2*) A declaration that the Toxics-FRGAS is being included in the compliance calculations under § 80.825 for the refinery that produced the Toxics-FRGAS.

(ii) The verification shall be made part of the product transfer documents for the Toxics-FRGAS.

(e) *Transfers of Toxics-FRGAS to non-United States markets.* The foreign refiner is responsible to ensure that all gasoline classified as Toxics-FRGAS is imported into the United States. A foreign refiner may remove the Toxics-FRGAS classification, and the gasoline need not be imported into the United States, but only if:

(1)(i) The foreign refiner excludes:

(A) The volume of gasoline from the refinery's compliance calculations under § 80.825; and

(B) In the case of Certified Toxics-FRGAS, the volume and toxics value of the gasoline from the compliance calculations under § 80.825.

(ii) The exclusions under paragraph (e)(1)(i) of this section shall be on the basis of the toxics value and volumes determined under paragraph (f) of this section; and

(2) The foreign refiner obtains sufficient evidence in the form of documentation that the gasoline was not imported into the United States.

(f) *Load port independent sampling, testing and refinery identification.* (1) On each occasion Toxics-FRGAS is loaded onto a vessel for transport to the United States a foreign refiner shall have an independent third party:

(i) Inspect the vessel prior to loading and determine the volume of any tank bottoms;

(ii) Determine the volume of Toxics-FRGAS loaded onto the vessel (exclusive of any tank bottoms present before vessel loading);

(iii) Obtain the EPA-assigned registration number of the foreign refinery;

(iv) Determine the name and country of registration of the vessel used to transport the Toxics-FRGAS to the United States; and

(v) Determine the date and time the vessel departs the port serving the foreign refinery.

(2) On each occasion Certified Toxics-FRGAS is loaded onto a vessel for transport to the United States a foreign refiner shall have an independent third party:

(i) Collect a representative sample of the Certified Toxics-FRGAS from each vessel compartment subsequent to loading on the vessel and prior to departure of the vessel from the port serving the foreign refinery;

(ii) Prepare a volume-weighted vessel composite sample from the compartment samples, and determine the value for toxics using the methodology specified in § 80.730 by:

(A) The third party analyzing the sample; or

(B) The third party observing the foreign refiner analyze the sample;

(iii) Review original documents that reflect movement and storage of the Certified Toxics-FRGAS from the refinery to the load port, and from this review determine:

(A) The refinery at which the Toxics-FRGAS was produced; and

(B) That the Toxics-FRGAS remained segregated from:

(*1*) Non-Toxics-FRGAS and Non-Certified Toxics-FRGAS; and

(2) Other Certified Toxics-FRGAS produced at a different refinery.

(3) The independent third party shall submit a report:

(i) To the foreign refiner containing the information required under paragraphs (f)(1) and (2) of this section, to accompany the product transfer documents for the vessel; and

(ii) To the Administrator containing the information required under paragraphs (f)(1) and (2) of this section, within thirty days following the date of the independent third party's inspection. This report shall include a description of the method used to determine the identity of the refinery at which the gasoline was produced, assurance that the gasoline remained segregated as specified in paragraph (n)(1) of this section, and a description of the gasoline's movement and storage between production at the source refinery and vessel loading.

(4) The independent third party shall:

(i) Be approved in advance by EPA, based on a demonstration of ability to perform the procedures required in this paragraph (f);

(ii) Be independent under the criteria specified in § 80.65(e)(2)(iii); and

(iii) Sign a commitment that contains the provisions specified in paragraph (i) of this section with regard to activities, facilities and documents relevant to compliance with the requirements of this paragraph (f).

(g) *Comparison of load port and port of entry testing.* (1)(i) Except as described in paragraph (g)(1)(ii) of this section, any foreign refiner and any United States importer of Certified Toxics-FRGAS shall compare the results from the load port testing under paragraph (f) of this section, with the port of entry testing as reported under paragraph (o) of this section, for the volume of gasoline and the toxics value.

(ii) Where a vessel transporting Certified Toxics-FRGAS off loads this gasoline at more than one United States port of entry, and the conditions of paragraph (g)(2)(i) of this section are met at the first United States port of entry, the requirements of paragraph (g)(2) of this section do not apply at subsequent ports of entry if the United States importer obtains a certification from the vessel owner, that meets the requirements of paragraph (s) of this section, that the vessel has not loaded any gasoline or blendstock between the first United States port of entry and the subsequent port of entry.

(2)(i) The requirements of this paragraph (g)(2) apply if:

(A) The temperature-corrected volumes determined at the port of entry and at the load port differ by more than one percent; or

(B) The toxics value determined at the port of entry is higher than the toxics value determined at the load port, and the amount of this difference is greater than the reproducibility amount specified for the port of entry test result by the American Society of Testing and Materials (ASTM).

(ii) The United States importer and the foreign refiner shall treat the gasoline as Non-Certified Toxics-FRGAS, and the foreign refiner shall exclude the gasoline volume and properties from its gasoline toxics compliance calculations under §80.825.

(h) *Attest requirements.* The following additional procedures shall be carried out by any foreign refiner of Toxics-FRGAS as part of the applicable attest engagement for each foreign refinery under §80.1035:

(1) The inventory reconciliation analysis under §80.128(b) and the tender analysis under §80.128(c) shall include Non-Toxics-FRGAS in addition to the gasoline types listed in §80.128(b) and (c).

(2) Obtain separate listings of all tenders of Certified Toxics-FRGAS, and of Non-Certified Toxics-FRGAS. Agree the total volume of tenders from the listings to the gasoline inventory reconciliation analysis in §80.128(b), and to the volumes determined by the third party under paragraph (f)(1) of this section.

(3) For each tender under paragraph (h)(2) of this section where the gasoline is loaded onto a marine vessel, report as a finding the name and country of registration of each vessel, and the volumes of Toxics-FRGAS loaded onto each vessel.

(4) Select a sample from the list of vessels identified in paragraph (h)(3) of this section used to transport Certified Toxics-FRGAS, in accordance with the guidelines in §80.127, and for each vessel selected perform the following:

(i) Obtain the report of the independent third party, under paragraph (f) of this section, and of the United States importer under paragraph (o) of this section.

(A) Agree the information in these reports with regard to vessel identification, gasoline volumes and test results.

(B) Identify, and report as a finding, each occasion the load port and port of entry parameter and volume results differ by more than the amounts allowed in paragraph (g) of this section, and determine whether the foreign refiner adjusted its refinery calculations as required in paragraph (g) of this section.

(ii) Obtain the documents used by the independent third party to determine transportation and storage of the Certified Toxics-FRGAS from the refinery to the load port, under paragraph (f) of this section. Obtain tank activity records for any storage tank where the Certified Toxics-FRGAS is stored, and pipeline activity records for any pipeline used to transport the Certified Toxics-FRGAS, prior to being loaded onto the vessel. Use these records to determine whether the Certified Toxics-FRGAS was produced at the refinery that is the subject of the attest engagement, and whether the Certified Toxics-FRGAS was mixed with any Non-Certified Toxics-FRGAS, Non-

Toxics-FRGAS, or any Certified Toxics-FRGAS produced at a different refinery.

(5) Select a sample from the list of vessels identified in paragraph (h)(3) of this section used to transport Certified and Non-Certified Toxics-FRGAS, in accordance with the guidelines in § 80.127, and for each vessel selected perform the following:

(i) Obtain a commercial document of general circulation that lists vessel arrivals and departures, and that includes the port and date of departure of the vessel, and the port of entry and date of arrival of the vessel.

(ii) Agree the vessel's departure and arrival locations and dates from the independent third party and United States importer reports to the information contained in the commercial document.

(6) Obtain separate listings of all tenders of Non-Toxics-FRGAS, and perform the following:

(i) Agree the total volume of tenders from the listings to the gasoline inventory reconciliation analysis in § 80.128(b).

(ii) Obtain a separate listing of the tenders under this paragraph (h)(6) where the gasoline is loaded onto a marine vessel. Select a sample from this listing in accordance with the guidelines in § 80.127, and obtain a commercial document of general circulation that lists vessel arrivals and departures, and that includes the port and date of departure and the ports and dates where the gasoline was off loaded for the selected vessels. Determine and report as a finding the country where the gasoline was off loaded for each vessel selected.

(7) In order to complete the requirements of this paragraph (h) an auditor shall:

(i) Be independent of the foreign refiner;

(ii) Be licensed as a Certified Public Accountant in the United States and a citizen of the United States, or be approved in advance by EPA based on a demonstration of ability to perform the procedures required in §§ 80.125 through 80.130 and this paragraph (h); and

(iii) Sign a commitment that contains the provisions specified in paragraph (i) of this section with regard to activities and documents relevant to compliance with the requirements of §§ 80.125 through 80.130, § 80.1035 and this paragraph (h).

(i) *Foreign refiner commitments.* Any foreign refiner shall commit to and comply with the provisions contained in this paragraph (i) as a condition to being assigned an individual refinery toxics baseline.

(1) Any United States Environmental Protection Agency inspector or auditor will be given full, complete and immediate access to conduct inspections and audits of the foreign refinery.

(i) Inspections and audits may be either announced in advance by EPA, or unannounced.

(ii) Access will be provided to any location where:

(A) Gasoline is produced;

(B) Documents related to refinery operations are kept;

(C) Gasoline or blendstock samples are tested or stored; and

(D) Toxics-FRGAS is stored or transported between the foreign refinery and the United States, including storage tanks, vessels and pipelines.

(iii) Inspections and audits may be by EPA employees or contractors to EPA.

(iv) Any documents requested that are related to matters covered by inspections and audits will be provided to an EPA inspector or auditor on request.

(v) Inspections and audits by EPA may include review and copying of any documents related to:

(A) Refinery baseline establishment, including the volume and toxics value, and transfers of title or custody, of any gasoline or blendstocks, whether Toxics-FRGAS or Non-toxics-FRGAS, produced at the foreign refinery during the period January 1, 1998 through the date of the refinery baseline petition or through the date of the inspection or audit if a baseline petition has not been approved, and any work papers related to refinery baseline establishment;

(B) The volume and toxics value of Toxics-FRGAS;

(C) The proper classification of gasoline as being Toxics-FRGAS or as not being Toxics-FRGAS, or as Certified

Toxics-FRGAS or as Non-Certified Toxics-FRGAS;

(D) Transfers of title or custody to Toxics-FRGAS;

(E) Sampling and testing of Toxics-FRGAS;

(F) Work performed and reports prepared by independent third parties and by independent auditors under the requirements of this section and § 80.1035 including work papers; and

(G) Reports prepared for submission to EPA, and any work papers related to such reports.

(vi) Inspections and audits by EPA may include taking samples of gasoline or blendstock, and interviewing employees.

(vii) Any employee of the foreign refiner will be made available for interview by the EPA inspector or auditor, on request, within a reasonable time period.

(viii) English language translations of any documents will be provided to an EPA inspector or auditor, on request, within 10 working days.

(ix) English language interpreters will be provided to accompany EPA inspectors and auditors, on request.

(2) An agent for service of process located in the District of Columbia will be named, and service on this agent constitutes service on and personal and subject matter jurisdiction in the United States over the foreign refiner or any employee of the foreign refiner for any action by EPA or otherwise by the United States related to the requirements of this subpart J.

(3) A foreign refiner shall be subject to civil liability for violations of this section, sections 114, 202(l), 211, and 301(a) of the Clean Air Act, as amended (42 U.S.C. 7414, 7521(l), 7545 and 7601(a)), and all other applicable laws or regulations and shall be subject to the provisions thereof. The Administrator may assess a penalty against a foreign refiner for any violation of this section by a foreign refiner, in the manner set forth in sections 205(c) of the CAA, 42 U.S.C. 7524(c) or commence a civil action against a foreign refiner to assess and recover a civil penalty in the manner set forth in section 205(b) of the CAA, 42 U.S.C. 7524(b). A FR shall be subject to criminal liability for violations of this section, section 113(c)(2) of the CAA, 42 U.S.C. 7413(c)(2), 18 U.S.C. 1001 and all other applicable provisions and shall be subject to the provisions thereof.

(4) United States substantive and procedural laws shall apply to any civil or criminal enforcement action against the foreign refiner or any employee of the foreign refiner related to the provisions of this section.

(5) Submitting a petition for an individual refinery toxics baseline, producing and exporting gasoline under an individual refinery toxics baseline, and all other actions to comply with the requirements of this subpart J relating to the establishment and use of an individual refinery toxics baseline constitute actions or activities that satisfy the provisions of 28 U.S.C. 1605(a)(2), but solely with respect to actions instituted against the foreign refiner, its agents and employees in any court or other tribunal in the United States for conduct that violates the requirements applicable to the foreign refiner under this subpart J, including conduct that violates Title 18 U.S.C. section 1001 and Clean Air Act section 113(c)(2).

(6) The foreign refiner, or its agents or employees, will not seek to detain or to impose civil or criminal remedies against EPA inspectors or auditors, whether EPA employees or EPA contractors, for actions performed within the scope of EPA employment related to the provisions of this section.

(7) The commitment required by this paragraph (i) shall be signed by the owner or president of the foreign refiner business.

(8) In any case where Toxics-FRGAS produced at a foreign refinery is stored or transported by another company between the refinery and the vessel that transports the Toxics-FRGAS to the United States, the foreign refiner shall obtain from each such other company a commitment that meets the requirements specified in paragraphs (i)(1) through (7) of this section, and these commitments shall be included in the foreign refiner's baseline petition.

(j) *Sovereign immunity*. By submitting a petition for an individual foreign refinery baseline under this section, or by producing and exporting gasoline to the United States under an individual

refinery toxics baseline under this section, the foreign refiner, its agents and employees, without exception, become subject to the full operation of the administrative and judicial enforcement powers and provisions of the United States without limitation based on sovereign immunity, with respect to actions instituted against the foreign refiner, its agents and employees in any court or other tribunal in the United States for conduct that violates the requirements applicable to the foreign refiner under this subpart J, including conduct that violates Title 18 U.S.C. section 1001 and Clean Air Act section 113(c)(2).

(k) *Bond posting.* Any foreign refiner shall meet the requirements of this paragraph (k) as a condition to being assigned an individual refinery toxics baseline.

(1) The foreign refiner shall annually post a bond of the amount calculated using the following equation:

$$Bond = G \times \$\,0.01 - Bond_{CG}$$

Where:

Bond = amount of the bond in U. S. dollars.

G = the largest volume of gasoline produced at the foreign refinery and exported to the United States, in gallons, during a single calendar year among the five preceding calendar years.

$Bond_{CG}$ = amount of bond currently posted by the refinery pursuant to § 80.94.

(2) Bonds shall be posted by:

(i) Paying the amount of the bond to the Treasurer of the United States;

(ii) Obtaining a bond in the proper amount from a third party surety agent that is payable to satisfy United States administrative or judicial judgments against the foreign refiner, provided EPA agrees in advance as to the third party and the nature of the surety agreement; or

(iii) An alternative commitment that results in assets of an appropriate liquidity and value being readily available to the United States, provided EPA agrees in advance as to the alternative commitment.

(3) If the bond amount for a foreign refinery increases, the foreign refiner shall increase the bond to cover the shortfall within 90 days of the date the bond amount changes. If the bond amount decreases, the foreign refiner may reduce the amount of the bond beginning 90 days after the date the bond amount changes.

(4) Bonds posted under this paragraph (k) shall:

(i) Be used to satisfy any judicial or administrative judgment, order, assessment or payment under a judicial or administrative settlement agreement that results from an administrative or judicial enforcement action for conduct in violation of this subpart J, including where such conduct violates Title 18 U.S.C. section 1001 and Clean Air Act section 113(c)(2);

(ii) Be provided by a corporate surety that is listed in the United States Department of Treasury Circular 570 ''Companies Holding Certificates of Authority as Acceptable Sureties on Federal Bonds'; and

(iii) Include a commitment that the bond will remain in effect for at least five (5) years following the end of latest averaging period that the foreign refiner produces gasoline pursuant to the requirements of this subpart J.

(5) On any occasion a foreign refiner bond is used to satisfy any judgment or other obligation, the foreign refiner shall increase the bond to cover the amount used within 90 days of the date the bond is used.

(6) The bond is used for payment of, not in lieu of, any obligation arising under any judgment, order, assessment or settlement agreement. Nothing herein is intended to waive any portion of any obligation except what portion is actually paid by use of funds from the bond.

(l) [Reserved]

(m) *English language reports.* Any report or other document submitted to EPA by a foreign refiner shall be in English language, or shall include an English language translation.

(n) *Prohibitions.* (1) No person may combine Certified Toxics-FRGAS with any Non-Certified Toxics-FRGAS or Non-Toxics-FRGAS, and no person may combine Certified Toxics-FRGAS with any Certified Toxics-FRGAS produced at a different refinery, until the importer has met all the requirements of paragraph (o) of this section, except as

provided in paragraph (e) of this section.

(2) No foreign refiner or other person may cause another person to commit an action prohibited in paragraph (n)(1) of this section, or that otherwise violates the requirements of this section.

(o) *United States importer requirements.* Any United States importer shall meet the following requirements:

(1) Each batch of imported gasoline shall be classified by the importer as being Toxics-FRGAS or as Non-Toxics-FRGAS, and each batch classified as Toxics-FRGAS shall be further classified as Certified Toxics-FRGAS or as Non-Certified Toxics-FRGAS.

(2) Gasoline shall be classified as Certified Toxics-FRGAS or as Non-Certified Toxics-FRGAS according to the designation by the foreign refiner if this designation is supported by product transfer documents prepared by the foreign refiner as required in paragraph (d) of this section, unless the gasoline is classified as Non-Certified Toxics-FRGAS under paragraph (g) of this section.

(3) For each gasoline batch classified as Toxics-FRGAS, any United States importer shall perform the following procedures:

(i) In the case of both Certified and Non-Certified Toxics-FRGAS, have an independent third party:

(A) Determine the volume of gasoline in the vessel;

(B) Use the foreign refiner's Toxics-FRGAS certification to determine the name and EPA-assigned registration number of the foreign refinery that produced the Toxics-FRGAS;

(C) Determine the name and country of registration of the vessel used to transport the Toxics-FRGAS to the United States; and

(D) Determine the date and time the vessel arrives at the United States port of entry.

(ii) In the case of Certified Toxics-FRGAS, have an independent third party:

(A) Collect a representative sample from each vessel compartment subsequent to the vessel's arrival at the United States port of entry and prior to off loading any gasoline from the vessel;

(B) Prepare a volume-weighted vessel composite sample from the compartment samples; and

(C) Determine the toxics value using the methodologies specified in § 80.730, by:

(*1*) The third party analyzing the sample; or

(*2*) The third party observing the importer analyze the sample.

(4) Any importer shall submit reports within thirty days following the date any vessel transporting Toxics-FRGAS arrives at the United States port of entry:

(i) To the Administrator containing the information determined under paragraph (o)(3) of this section; and

(ii) To the foreign refiner containing the information determined under paragraph (o)(3)(ii) of this section.

(5) Any United States importer shall meet the requirements specified in § 80.815 for any imported gasoline that is not classified as Certified Toxics-FRGAS under paragraph (o)(2) of this section.

(p) *Truck Imports of Certified Toxics-FRGAS produced at a Refinery* (1) Any refiner whose Certified Toxics-FRGAS is transported into the United States by truck may petition EPA to use alternative procedures to meet the following requirements:

(i) Certification under paragraph (d)(5) of this section;

(ii) Load port and port of entry sampling and testing under paragraphs (f) and (g) of this section;

(iii) Attest under paragraph (h) of this section; and

(iv) Importer testing under paragraph (o)(3) of this section.

(2) These alternative procedures shall ensure Certified Toxics-FRGAS remains segregated from Non-Certified Toxics-FRGAS and from Non-Toxics-FRGAS until it is imported into the United States. The petition will be evaluated based on whether it adequately addresses the following:

(i) Provisions for monitoring pipeline shipments, if applicable, from the refinery, that ensure segregation of Certified Toxics-FRGAS from that refinery from all other gasoline;

(ii) Contracts with any terminals and/or pipelines that receive and/or transport Certified Toxics-FRGAS,

that prohibit the commingling of Certified Toxics-FRGAS with any of the following:

(A) Other Certified Toxics-FRGAS from other refineries.

(B) All Non-Certified Toxics-FRGAS.

(C) All Non-Toxics-FRGAS;

(iii) Procedures for obtaining and reviewing truck loading records and United States import documents for Certified Toxics-FRGAS to ensure that such gasoline is only loaded into trucks making deliveries to the United States;

(iv) Attest procedures to be conducted annually by an independent third party that review loading records and import documents based on volume reconciliation, or other criteria, to confirm that all Certified Toxics-FRGAS remains segregated throughout the distribution system and is only loaded into trucks for import into the United States.

(3) The petition required by this section shall be submitted to EPA along with the application for small refiner status and individual refinery toxics baseline and standards under § 80.240 and this section.

(q) *Withdrawal or suspension of a foreign refinery's baseline.* EPA may withdraw or suspend a baseline that has been assigned to a foreign refinery where:

(1) A foreign refiner fails to meet any requirement of this section;

(2) A foreign government fails to allow EPA inspections as provided in paragraph (i)(1) of this section;

(3) A foreign refiner asserts a claim of, or a right to claim, sovereign immunity in an action to enforce the requirements in this subpart J; or

(4) A foreign refiner fails to pay a civil or criminal penalty that is not satisfied using the foreign refiner bond specified in paragraph (k) of this section.

(r) *Early use of a foreign refinery baseline.* (1) A foreign refiner may begin using an individual refinery baseline before EPA has approved the baseline, provided that:

(i) A baseline petition has been submitted as required in paragraph (b) of this section;

(ii) EPA has made a provisional finding that the baseline petition is complete;

(iii) The foreign refiner has made the commitments required in paragraph (i) of this section;

(iv) The persons who will meet the independent third party and independent attest requirements for the foreign refinery have made the commitments required in paragraphs (f)(3)(iii) and (h)(7)(iii) of this section; and

(v) The foreign refiner has met the bond requirements of paragraph (k) of this section.

(2) In any case where a foreign refiner uses an individual refinery baseline before final approval under paragraph (r)(1) of this section, and the foreign refinery baseline values that ultimately are approved by EPA are more stringent than the early baseline values used by the foreign refiner, the foreign refiner shall recalculate its compliance, ab initio, using the baseline values approved by EPA, and the foreign refiner shall be liable for any resulting violation of the gasoline toxics requirements.

(s) *Additional requirements for petitions, reports and certificates.* Any petition for a refinery baseline under § 80.915, any alternative procedures under paragraph (r) of this section, any report or other submission required by paragraph (c), (f)(2), or (i) of this section, and any certification under paragraph (d)(3) of this section shall be:

(1) Submitted in accordance with procedures specified by the Administrator, including use of any forms that may be specified by the Administrator.

(2) Be signed by the president or owner of the foreign refiner company, or by that person's immediate designee, and shall contain the following declaration:

I hereby certify: (1) That I have actual authority to sign on behalf of and to bind [insert name of foreign refiner] with regard to all statements contained herein; (2) that I am aware that the information contained herein is being certified, or submitted to the United States Environmental Protection Agency, under the requirements of 40 CFR Part 80, subpart J, and that the information is material for determining compliance under these regulations; and (3) that I have read and understand the information being

certified or submitted, and this information is true, complete and correct to the best of my knowledge and belief after I have taken reasonable and appropriate steps to verify the accuracy thereof.

I affirm that I have read and understand the provisions of 40 CFR Part 80, subpart J, including 40 CFR 80.1030 [insert name of foreign refiner]. Pursuant to Clean Air Act section 113(c) and Title 18, United States Code, section 1001, the penalty for furnishing false, incomplete or misleading information in this certification or submission is a fine of up to $10,000, and/or imprisonment for up to five years.

ATTEST ENGAGEMENTS

§ 80.1035 What are the attest engagement requirements for gasoline toxics compliance applicable to refiners and importers?

In addition to the requirements for attest engagements that apply to refiners and importers under §§ 80.125 through 80.130, and § 80.1030, the attest engagements for refiners and importers applicable to this subpart J shall include the following procedures and requirements each year, which should be applied separately to reformulated gasoline (and RBOB, combined) and conventional gasoline:

(a) Obtain the EPA toxics baseline approval letter for the refinery to determine the refinery's applicable baseline toxics value and baseline toxics volume under § 80.915.

(b) Obtain a written representation from the company representative stating the toxics value(s) that the company used as its baseline(s) and agree that number to paragraph (a) of this section.

(c) Obtain and read a copy of the refinery's or importer's annual toxics reports per §§ 1A80.75(e) and 80.105 filed with EPA for the year to determine the compliance baseline and incremental volume.

(d) Agree the yearly volume of gasoline reported to EPA in the toxics reports with the inventory reconciliation analysis under § 80.128.

(e) Calculate the annual average toxics value level for each type of gasoline specified at § 80.815(b) and agree the applicable values with the values reported to EPA.

(f) Calculate the difference between the yearly volume of gasoline reported to EPA and the baseline volume, if applicable, to determine the yearly incremental volume and agree that value with the value reported to EPA.

(g) Calculate the compliance baseline per § 80.850, and agree that value with the value reported to EPA.

§ 80.1040 [Reserved]

ADDITIONAL RULEMAKING

§ 80.1045 What additional rulemaking will EPA conduct?

No later than July 1, 2003, the Administrator shall propose any requirements to control hazardous air pollutants from motor vehicles and motor vehicle fuels that the Administrator determines are appropriate pursuant to section 202(l)(2) of the Act. The Administrator will take final action on such proposal no later than July 1, 2004. During this rulemaking, EPA also intends to evaluate emissions and potential strategies relating to hazardous air pollutants from nonroad engines and vehicles.

APPENDIX A TO PART 80—TEST FOR THE DETERMINATION OF PHOSPHORUS IN GASOLINE

1. Scope.

1.1 This method was developed for the determination of phosphorus generally present as pentavalent phosphate esters or salts, or both, in gasoline. This method is applicable for the determination of phosphorus in the range from 0.0008 to 0.15 g P/U.S. gal, or 0.2 to 49 mg P/liter.

2. Applicable documents.

2.1 ASTM Standards:

D 1100 Specification for Filter Paper for Use in Chemical Analysis.

3. Summary of method.

3.1 Organic matter in the sample is decomposed by ignition in the presence of zinc oxide. The residue is dissolved in sulfuric acid and reacted with ammonium molybdate and hydrazine sulfate. The absorbance of the ''Molybdenum Blue'' complex is proportional to the phosphorus concentration in the sample and is read at approximately 820 nm in a 5-cm cell.

4. Apparatus.

4.1 Buret, 10-ml capacity, 0.05-ml subdivisions.

4.2 Constant-Temperature Bath, equipped to hold several 100-ml volumetric flasks submerged to the mark. Bath must have a large enough reservoir or heat capacity to keep the temperature at 180 to 190 °F (82.2 to 87.8 °C) during the entire period of sample heating.

NOTE 1: If the temperature of the hot water bath drops below 180 °F (82.2 °C) the color development may not be complete.

4.3 Cooling Bath, equipped to hold several 100-ml volumetric flasks submerged to the mark in ice water.

4.4 Filter Paper, for quantitative analysis, Class G for fine precipitates as defined in Specification D 1100.

4.5 Ignition Dish—Coors porcelain evaporating dish, glazed inside and outside, with pourout (size no. 00A, diameter 75 mm. capacity 70 ml).

4.6 Spectrophotometer, equipped with a tungsten lamp, a red-sensitive phototube capable of operating at 830 nm and with absorption cells that have a 5-cm light path.

4.7 Thermometer, range 50 to 220 °F (10 to 105 °C).

4.8 Volumetric Flask, 100-ml with ground-glass stopper.

4.9 Volumetric Flask, 1000-ml with ground-glass stopper.

4.10 Syringe, Luer-Lok, 10-ml equipped with 5-cm. 22-gage needle.

5. Reagents.

5.1 Purity of Reagents—Reagent grade chemicals shall be used in all tests. Unless otherwise indicated, it is intended that all reagents shall conform to the specifications of the Committee on Analytical Reagents of the American Chemical Society, where such specifications are available. Other grades may be used, provided it is first ascertained that the reagent is of sufficiently high purity to permit its use without lessening the accuracy of the determination.

5.2 Purity of Water—Unless otherwise indicated, references to water shall be understood to mean distilled water or water of equal purity.

5.3 Ammonium Molybdate Solution—Using graduated cylinders for measurement add slowly (Note 2), with continuous stirring, 225 ml of concentrated sulfuric acid to 500 ml of water contained in a beaker placed in a bath of cold water. Cool to room temperature and add 20 g of ammonium molybdate tetrahydrate ($(NH_4)_6 Mo_7 O_{24} \cdot 4H_2 O$). Stir until solution is complete and transfer to a 1000-ml flask. Dilute to the mark with water.

NOTE 2: Wear a face shield, rubber gloves, and a rubber apron when adding concentrated sulfuric acid to water.

5.4 Hydrazine Sulfate Solution—Dissolve 1.5 of hydrazine sulfate ($H_2 NNH_2 \cdot H_2 SO_4$) in 1 litre of water, measured with a graduated cylinder.

NOTE 3: This solution is not stable. Keep it tightly stoppered and in the dark. Prepare a fresh solution after 3 weeks.

5.5 Molybdate-Hydrazine Reagent—Pipet 25 ml of ammonium molybdate solution into a 100-ml volumetric flask containing approximately 50 ml of water, add by pipet 10 ml of $N_2 NNH_2 \cdot H_2 SO_4$ solution, and dilute to 100 ml with water.

NOTE 4: This reagent is unstable and should be used within about 4 h. Prepare it immediately before use. Each determination (including the blank) uses 50 ml.

5.6 Phosphorus, Standard Solution (10.0 µg P/ml)—Pipet 10 ml of stock standard phosphorus solution into a 1000-ml volumetric flask and dilute to the mark with water.

5.7 Phosphorus, Stock Standard Solution (1.00 mg P/ml)—Dry approximately 5 g of potasium dihydrogen phosphate ($KH_2 PO_4$ in an oven at 221 to 230 °F (105 to 110 °C) for 3 h. Dissolve 4.393±0.002 g of the reagent in 150 ml, measured with a graduated cylinder, of $H_2 SO_4$(1+10) contained in a 1000-ml volumetric flask. Dilute with water to the mark.

5.8 Sulfuric Acid (1+10)—Using graduated cylinders for measurement add slowly (Note 2), with continuous stirring, 100-ml of concentrated sulfuric acid ($H_2 SO_4$, sp gr 1.84) to 1 litre of water contained in a beaker placed in a bath of cold water.

5.9 Zinc Oxide.

NOTE 5: High-bulk density zinc oxide may cause spattering. Density of approximately 0.5 g/cm^3 has been found satisfactory.

6. Calibration.

6.1 Transfer by buret, or a volumetric transfer pipet, 0.0, 0.5, 1.0, 1.5, 2.0, 3.0, 3.5, and 4.0 ml of phosphorus standard solution into 100-ml volumetric flasks.

6.2 Pipet 10 ml of $H_2 SO_4$ (1+10) into each flask. Mix immediately by swirling.

6.3 Prepare the molybdate-hydrazine solution. Prepare sufficient volume of reagent based on the number of samples being analyzed.

6.4 Pipet 50 ml of the molybdate-hydrazine solution to each volumetric flask. Mix immediately by swirling.

6.5 Dilute to 100 ml with water.

6.6 Mix well and place in the constant-temperature bath so that the contents of the flask are submerged below the level of the bath. Maintain bath temperature at 180 to 190 °F (82.2 to 87.8 °C) for 25 min (Note 1).

6.7 Transfer the flask to the cooling bath and cool the contents rapidly to room temperature. Do not allow the samples to cool more than 5 °F (2.8 °C) below room temperature.

NOTE 6: Place a chemically clean thermometer in one of the flasks to check the temperature.

6.8 After cooling the flasks to room temperature, remove them from the cooling water bath and allow them to stand for 10 min. at room temperature.

6.9 Using the 2.0-ml phosphorus standard in a 5-cm cell, determine the wavelength near 820 nm that gives maximum absorbance. The wavelength giving maximum absorbance should not exceed 830 nm.

6.9.1 Using a red-sensitive phototube and 5-cm cells, adjust the spectrophotometer to zero absorbance at the wavelength of maximum absorbance using distilled water in both cells. Use the wavelength of maximum absorbance in the determination of calibration readings and future sample readings.

6.9.2 The use of 1-cm cells for the higher concentrations is permissible.

6.10 Measure the absorbance of each calibration sample including the blank (0.0 ml phosphorus standard) at the wavelength of maximum absorbance with distilled water in the reference cell.

NOTE 7: Great care must be taken to avoid possible contamination. If the absorbance of the blank exceeds 0.04 (for 5-cm cell), check for source of contamination. It is suggested that the results be disregarded and the test be rerun with fresh reagents and clean glassware.

6.11 Correct the absorbance of each standard solution by subtracting the absorbance of the blank (0 ml phosphorus standard).

6.12 Prepare a calibration curve by plotting the corrected absorbance of each standard solution against micrograms of phosphorus. One millilitre of phosphorus standard solution provides 10 μg of phosphorus.

7. Sampling.

7.1 Selection of the size of the sample to be tested depends on the expected concentration of phosphorous in the sample. If a concentration of phosphorus is suspected to be less than 0.0038 g/gal (1.0 mg/litre), it will be necessary to use 10 ml of sample.

NOTE 8: Two grams of zinc oxide cannot absorb this volume of gasoline. Therefore the 10-ml sample is ignited in aliquots of 2 ml in the presence of 2 g of zinc oxide.

7.2 The following table serves as a guide for selecting sample size:

Phosphorus, milligrams per liter	Equivalent, grams per gallon	Sample size, milliliter
2.5 to 40	0.01 to 0.15	1.00
1.3 to 20	0.005 to 0.075	2.00
0.9 to 13	0.0037 to 0.05	3.00
1 or less	0.0038 or less	10.00

8. Procedure.

8.1 Transfer 2±0.2 g of zinc oxide into a conical pile in a clean, dry, unetched ignition dish.

NOTE 9: In order to obtain satisfactory accuracy with the small amounts of phosphorus involved, it is necessary to take extensive precautions in handling. The usual precautions of cleanliness, careful manipulation, and avoidance of contamination should be scrupulously observed; also, all glassware should be cleaned before use, with cleaning acid or by some procedure that does not involve use of commercial detergents. These compounds often contain alkali phosphates which are strongly adsorbed by glass surfaces and are not removed by ordinary rinsing. It is desirable to segregate a special stock of glassware for use only in the determination of phosphorus.

8.2 Make a deep depression in the center of the zinc oxide pile with a stirring rod.

8.3 Pipet the gasoline sample (Note 10) (see 7.2 for suggested sample volume) into the depression in the zinc oxide. Record the temperature of the fuel if the phosphorus content is required at 60 °F (15.6 °C) and make correction as directed in 9.2.

NOTE 10: For the 10-ml sample use multiple additions and a syringe. Hold the tip of the needle at approximately ⅔ of the depth of the zinc oxide layer and slowly deliver 2 ml of the sample: fast sample delivery may give low results. Give sufficient time for the gasoline to be absorbed by the zinc oxide. Follow step 8.6. Cool the dish to room temperature. Repeat steps 8.3 and 8.6 until all the sample has been burned. Safety—cool the ignition dish before adding the additional aliquots of gasoline to avoid a flash fire.

8.4 Cover the sample with a small amount of fresh zinc oxide from reagent bottle (use the tip of a small spatula to deliver approximately 0.2 g). Tap the sides of the ignition dish to pack the zinc oxide.

8.5 Prepare the blank, using the same amount of zinc oxide in an ignition dish.

8.6 Ignite the gasoline, using the flame from a bunsen burner. Allow the gasoline to burn to extinction (NOTE 10).

8.7 Place the ignition dishes containing the sample and blank in a hot muffle furnace set at a temperature of 1150 to 1300 °F (621 to 704 °C) for 10 min. Remove and cool the ignition dishes. When cool gently tap the sides of the dish to loosen the zinc oxide. Again place the dishes in the muffle furnace for 5 min. Remove and cool the ignition dishes to room temperature. The above treatment is usually sufficient to burn the carbon. If the carbon is not completely burned off place the dish into the oven for further 5-min. periods.

NOTE 11: Step 8.7 may also be accomplished by heating the ignition dish with a Meker

burner gradually increasing the intensity of heat until the carbon from the sides of the dish has been burned, then cool to room temperature.

8.8 Pipet 25 ml of H_2SO_4 (1+10) to each ignition dish. While pipeting, carefully wash all traces of zinc oxide from the sides of the ignition dish.

8.9 Cover the ignition dish with a borosilicate watch glass and warm the ignition dish on a hot plate until the zinc oxide is completely dissolved.

8.10 Transfer the solution through filter paper to a 100-ml volumetric flask. Rinse the watch glass and the dish several times with distilled water (do not exceed 25 ml) and transfer the washings through the filter paper to the volumetric flask.

8.11 Prepare the molybdate-hydrazine solution.

8.12 Add 50 ml of the molybdate-hydrazine solution by pipet to each 100-ml volumetric flask. Mix immediately by swirling.

8.13 Dilute to 100 ml with water and mix well. Remove stoppers from flasks after mixing.

8.14 Place the 100-ml flasks in the constant-temperature bath for 25 min. so that the contents of the flasks are below the liquid level of the bath. The temperature of the bath should be 180 to 190 °F (82.2 to 87.8 °C) (NOTE 1).

8.15 Transfer the 100-ml flasks to the cooling bath and cool the contents rapidly to room temperature (NOTE 6).

8.16 Allow the samples to stand at room temperature before measuring the absorbance.

NOTE 12: The color developed is stable for at least 4 h.

8.17 Set the spectrophotometer to the wavelength of maximum absorbance as determined in 6.9. Adjust the spectrophotometer to zero absorbance, using distilled water in both cells.

8.18 Measure the absorbance of the samples at the wavelength of maximum absorbance with distilled water in the reference cell.

8.19 Subtract the absorbance of the blank from the absorbance of each sample (NOTE 7).

8.20 Determine the micrograms of phosphorous in the sample, using the calibration curve from 6.12 and the corrected absorbance.

9. Calculations.

9.1 Calculate the milligrams of phosphorus per litre of sample as follows:

$$P, \text{mg/litre} = P/V$$

where:

P = micrograms of phosphorus read from calibration curve, and

V = millilitres of gasoline sample.

To convert to grams of phosphorus per U.S. gallon of sample, multiply mg P/litre by 0.0038.

9.2 If the gasoline sample was taken at a temperature other than 60 °F (15.6 °C) make the following temperature correction:

$$\text{mg P/litre at } 15.6\ ^\circ\text{C} = [\text{mg P/litre at t}]\,[1+0.001\,(t-15.6)]$$

where:

t = observed temperature of the gasoline, °C.

9.3 Concentrations below 2.5 mg/litre or 0.01 g/gal should be reported to the nearest 0.01 mg/litre or 0.0001 g/U.S. gal.

9.3.1 For higher concentrations, report results to the nearest 1 mg P/litre or 0.005 g P/U.S. gal.

10. Precision.

10.1 The following criteria should be used for judging the acceptability of results (95 percent confidence):

10.2 Repeatability—Duplicate results by the same operator should be considered suspect if they differ by more than the following amounts:

g P/U.S. gal (mg· P/litre)	Repeatability
0.0008 to 0.005 (0.2 to 1.3) ..	0.0002 g P/U.S. gal (0.05 mg P/litre).
0.005 to 0.15 (1.3 to 40)	7% of the mean.

10.3 Reproducibility—The results submitted by each of two laboratories should not be considered suspect unless they differ by more than the following amounts:

g P/U.S. gal (mg· P/litre)	Reproducibility
0.0008 to 0.005 (0.2 to 1.3) ..	0.0005 g P/U.S. gal (0.13 mg P/litre).
0.005 to 0.15 (1.3 to 40)	13% of the mean.

[39 FR 24891, July 8, 1974; 39 FR 25653, July 12, 1974]

APPENDIX B TO PART 80—TEST METHODS FOR LEAD IN GASOLINE

METHOD 1—STANDARD METHOD TEST FOR LEAD IN GASOLINE BY ATOMIC ABSORPTION SPECTROMETRY

1. Scope.

1.1. This method covers the determination of the total lead content of gasoline. The procedure's calibration range is 0.010 to 0.10 gram of lead/U.S. gal. Samples above this level should be diluted to fall within this range or a higher level calibration standard curve must be prepared. The higher level curve must be shown to be linear and measurement of lead at these levels must be shown to be accurate by the analysis of control samples at a higher level of alkyl lead

content. The method compensates for variations in gasoline composition and is independent of lead alkyl type.

2. Summary of method.

2.1 The gasoline sample is diluted with methyl isobutyl ketone and the alkyl lead compounds are stabilized by reaction with iodine and a quarternary ammonium salt. The lead content of the sample is determined by atomic absorption flame spectrometry at 2833 A, using standards prepared from reagent grade lead chloride. By the use of this treatment, all alkyl lead compounds give identical response.

3. Apparatus.

3.1 Atomic Absorption Spectometer, capable of scale expansion and nebulizer adjustment, and equipped with a slot burner and premix chamber for use with an air-acetylene flame.

3.2 Volumetric Flasks, 50-ml, 100-ml, 250-ml, and one litre sizes.

3.3 Pipets, 2-ml, 5-ml, 10-ml, 20-ml, and 50-ml sizes.

3.4 Micropipet, 100-µl, Eppendorf type or equivalent.

4. Reagents.

4.1 Purity of Reagents—Reagent grade chemicals shall be used in all tests. Unless otherwise indicated, it is intended that all reagents shall conform to the specifications of the Committee on Analytical Reagents of the American Chemical Society, where such specifications are available. Other grades may be used, provided it is first ascertained that the reagent is of sufficiently high purity to permit its use without lessening the accuracy of the determination.

4.2 Purity of Water—Unless otherwise indicated, references to water shall be understood to mean distilled water or water of equal purity.

4.3 Aliquat 336 (tricapryl methyl ammonium chloride).

4.4 Aliquat 336/MIBK Solution (10 percent v/v)—Dissolve and dilute 100 ml (88.0 g) of Aliquat 336 with MIBK to one liter.

4.5 Aliquat 336/MIBK Solution (1 percent v/v)—Dissolve and dilute 10 ml (8.8 g) of Aliquat 336 with MIBK to one liter.

4.6 Iodine Solution—Dissolve and dilute 3.0 g iodine crystals with Toluene to 100 ml.

4.7 Lead Chloride.

4.8 Lead-Sterile Gasoline—Gasoline containing less than 0.005 g Pb/gal.

4.9 Lead, Standard Solution (5.0 g Pb/gal)—Dissolve 0.4433 g of lead chloride ($PbCl_2$) previously dried at 105 °C for 3 h in about 200 ml of 10 percent Aliquat 336/MIBK solution in a 250-ml volumetric flask. Dilute to the mark with the 10 percent Aliquat solution, mix, and store in a brown bottle having a polyethylene-lined cap. This solution contains 1,321 µg Pb/ml, which is equivalent to 5.0 g Pb/gal.

4.10 Lead, Standard Solution (1.0 g Pb/gal)—By means of a pipet, accurately transfer 50.0 ml of the 5.0 g Pb/gal solution to a 250-ml volumetric flask, dilute to volume with 1 percent Aliquat/MIBK solution. Store in a brown bottle having a polyethylene-lined cap.

4.11 Lead, Standard Solutions (0.02, 0.05, and 0.10 g Pb/gal)—Transfer accurately by means of pipets 2.0, 5.0, and 10.0 ml of the 1.0-g Pb/gal solution to 100-ml volumetric flasks; add 5.0 ml of 1 percent Aliquat 336 solution to each flask; dilute to the mark with MIBK. Mix well and store in bottles having polyethylene-lined caps.

4.12 Methyl Isobutyl Ketone (MIBK). (4-methyl-2-pentanone).

5. Calibration.

5.1 Preparation of Working Standards—Prepare three working standards and a blank using the 0.02, 0.05, and 0.10-g Pb/gal standard lead solutions described in 4.11.

5.1.1 To each of four 50-ml volumetric flasks containing 30 ml of MIBK, add 5.0 ml of low lead standard solution and 5.0 ml of lead-free gasoline. In the case of the blank, add only 5.0 ml of lead-free gasoline.

5.1.2 Add immediately 0.1 ml of iodine/toluene solution by means of the 100-µl Eppendorf pipet. Mix well.[1]

5.1.3 Add 5 ml of 1 percent Aliquat 336 solution and mix.

5.1.4 Dilute to volume with MIBK and mix well.

5.2 Preparation of Instrument—Optimize the atomic absorption equipment for lead at 2833 A. Using the reagent blank, adjust the gas mixture and the sample aspiration rate to obtain an oxidizing flame.

5.2.1 Aspirate the 0.1-g Pb/gal working standard and adjust the burner position to give maximum response. Some instruments require the use of scale expansion to produce a reading of 0.150 to 0.170 for this standard.

5.2.2 Aspirate the reagent blank to zero the instrument and check the absorbances of the three working standards for linearity.

6. Procedure.

6.1 To a 50 ml volumetric flask containing 30 ml MIBK, add 5.0 ml of gasoline sample and mix.[2]

6.1.1 Add 0.10 ml (100 µl) of iodine/toluene solution and allow the mixture to react about 1 minute.[3]

---

[1] EPA practice will be to mix well by shaking vigorously for approximately one minute.

[2] The gasoline should be allowed to come to room temperature (25 °C).

[3] See footnote 1 of section 5.1.2.

6.1.2 Add 5.0 ml of 1 percent Aliquot 336/MIBK solution and mix.

6.1.3 Dilute to volume with MIBK and mix.

6.2 Aspirate the samples and working standards and record the absorbance values with frequent checks of the zero.

6.3 Any sample resulting in a peak greater than 0.05 g Pb/gal will be run in duplicate. Samples registering greater than 0.10 g Pb/gal should be diluted with iso-octane or unleaded fuel to fall within the calibration range or a higher level calibration standard curve must be prepared. The higher level curve must be shown to be linear and measurement of lead at these levels must be shown to be accurate by the analysis of control samples at a higher level of alkyl lead content.

7. Calculations.

7.1 Plot the absorbance values versus concentration represented by the working standards and read the concentrations of the samples from the graph.

8. Precision.

8.1 The following criteria should be used for judging the acceptability of results (95 percent confidence):

8.1.1 Repeatability—Duplicate results by the same operator should be considered suspect if they differ by more than 0.005 g/gal.

8.1.2 Reproductibility—The results submitted by each of two laboratories should not be considered suspect unless the two results differ by more than 0.01 g/gal.

METHOD 2—AUTOMATED METHOD TEST FOR LEAD IN GASOLINE BY ATOMIC ABSORPTION SPECTROMETRY

1. Scope and application.

1.1 This method covers the determination of the total lead content of gasoline. The procedure's calibration range is 0.010 to 0.10 gram of lead/U.S. gal. Samples above this level should be diluted to fall within this range or a higher level calibration standard curve must be prepared. The higher level curve must be shown to be linear and measurement of lead at these levels must be shown to be accurate by the analysis of control samples at a higher level of alkyl lead content. The method compensates for variations in gasoline composition and is independent of lead alkyl type.

1.2 This method may be used as an alternative to the Standard Method set forth above.

1.3 Where trade names or specific products are noted in the method, equivalent apparatus and chemical reagents may be used. Mention of trade names or specific products is for the assistance of the user and does not constitute endorsement by the U.S. Environmental Protection Agency.

2. Summary of method.

2.1 The gasoline sample is diluted with methly isobutyl ketone (MIBK) and the alkyl lead compounds are stabilized by reacting with iodine and a quarternary ammonium salt. An automated system is used to perform the diluting and the chemical reactions and feed the products to the atomic absorption spectrometer with an air-acetylene flame.

2.2 The dilution of the gasoline with MIBK compensates for severe non-atomic absorption, scatter from unburned carbon containing species and matrix effects caused in part by the burning characteristics of gasoline.

2.3 The *in-situ* reaction of alkyl lead in gasoline with iodine eliminates the problem of variations in response due to different alkyl types by leveling the response of all alkyl lead compounds.

2.4 The addition of the quarternary ammonium salt improves response and increases the stability of the alkyl iodide complex.

3. Sample handling and preservation.

3.1 Samples should be collected and stored in containers which will protect them from changes in the lead content of the gasoline such as from loss of volatile fractions of the gasoline by evaporation or leaching of the lead into the container or cap.

3.2 If samples have been refrigerated they should be brought to room temperature prior to analysis.

4. Apparatus.

4.1 AutoAnalyzer system consisting of:

4.1.1 Sampler 20/hr cam, 30/hr cam.

4.1.2 Proportioning pump.

4.1.3 Lead in gas manifold.

4.1.4 Disposable test tubes.

4.1.5 Two 2-liter and one 0.5 liter Erlenmeyer solvent displacement flasks. Alternatively, high pressure liquid chromatography (HPLC) or syringe pumps may be used.

4.2 Atomic Absorption Spectroscopy (AAS) Detector System consisting of:

4.2.1 Atomic absorption spectrometer.

4.2.2 10″ strip chart recorder.

4.2.3 Lead hollow cathode lamp or electrodeless discharge lamp (EDL).

5. Reagents.

5.1 Aliquat 336/MIBK solution (10% v/v): Dissolve and dilute 100 ml (88.0 g) of Aliquat 336 (Aldrich Chemical Co., Milwaukee, Wisconsin) with MIBK (Burdick & Jackson Lab., Inc., Muskegon, Michigan) to one liter.

5.2 Aliquat 336/iso-octane solution (1% v/v): Dissolve and dilute 10 ml (8.8 g) of Alquat 336 (reagent 5.1) with iso-octane to one liter.

5.3 Iodine solution (3% w/v): Dissolve and dilute 3.0 g iodine crystals (American Chemical Society) with toluene (Burdick & Jackson Lab., Inc., Muskegon, Michigan) to 100 ml.

5.4 Iodine working solution (0.24% w/v): Dilute 8 ml of reagent 5.3 to 100 ml with toluene.

5.5 Methyl isobutyl ketone (MIBK) (4-methlyl-2-pentanone).

5.6 Certified unleaded gasoline (Phillips Chemical Co., Borger, Texas) or iso-octane (Burdick & Jackson Lab, Inc., Muskegon, Michigan).

6. Calibration standards.

6.1 Stock 5.0 g Pb/gal Standard:

Dissolve 0.4433 gram of lead chloride ($PbCl_2$) previously dried at 105 °C for 3 hours in 200 ml of 10% v/v Aliquat 336/MIBK solution (reagent 5.1) in a 250 ml volumetric flask. Dilute to volume with reagent 5.1 and store in an amber bottle.

6.2 Intermediate 1.0 g Pb/gal Standard:

Pipet 50 ml of the 5.0 g Pb/gal standard into a 250 ml volumetric flask and dilute to volume with a 1% v/v Aliquat 336/iso-octane solution (reagent 5.2). Store in an amber bottle.

6.3 Working 0.02, 0.05, 0.10 g Pb/gal Standards:

Pipet 2.0, 5.0, and 10.0 ml of the 1.0 g Pb/gal solution to 100 ml volumetric flasks. Add 5 ml of a 1% Aliquat 336/iso-octane solution to each flask. Dilute to volume with iso-octane. These solutions contain 0.02, 0.05, and 0.10 g Pb/gal in a 0.05% Aliquat 336/iso-octane solution.

7. AAS Instrumental conditions.

7.1 Lead hollow cathode lamp.

7.2 Wavelength: 283.3 nm.

7.3 Slit: 4 (0.7mm).

7.4 Range: UV.

7.5 Fuel: Acetylene (approx. 20 ml/min at 8 psi).

7.6 Oxidant: Air (approx. 65 ml/min at 31 psi).

7.7 Nebulizer: 5.2 ml/min.

7.8 Chart speed: 10 in/hr.

8. Procedures.

8.1 AAS start-up.

8.1.1 Assure that instrumental conditions have been optimized and aligned according to Section 7 and the instrument has had substantial time for warm-up.

8.2 Auto Analyzer start-up [see figure 1].

8.2.1 Check all pump tubing and replace as necessary. Iodine tubing should be changed daily. All pump tubing should be replaced after one week of use. Place the platen on the pump.

8.2.2 Withdraw any water from the sample wash cup and fill with certified unleaded gasoline (reagent 5.6).

8.2.3 Fill the 2-liter MIBK dilution displacement Erlenmeyer flask (reagent 5.5) and the 0.5 liter Aliquat 336/MIBK 1% v/v (reagent 5.2) displacement flask and place the rubber stopper glass tubing assemblies in their respective flasks.

8.2.4 Fill a 2-liter Erlenmeyer flask with distilled water. The water will be used to displace the solvents. Therefore, place the appropriate lines in this flask. This procedure is not relevant if syringe pumps are used.

8.2.5 Fill the final debubbler reverse displacement 2-liter Erlenmeyer flask with distilled water and place the rubber stopper glass tubing assembly in the flask.

8.2.6 Place the appropriate lines for the iodine reagent (reagent 5.4) and the wash solution (reagent 5.6) in their respective bottles.

8.2.7 Start the pump and connect the aspiration line from the manifold to the AAS.

8.2.8 Some initial checks to assure that the reagents are being added are:

a. A good uniform bubble pattern.

b. Yellow color evident due to iodine in the system.

c. No surging in any tubing.

8.3 Calibration.

8.3.1 Turn the chart drive on and obtain a steady baseline.

8.3.2 Load standards and samples into sample tray.

8.3.3 Start the sampler and run the standards (Note: first check the sample probe positioning with an empty test tube).

8.3.4 Check the linearity of calibration standards response and slope by running a least squares fit. Check these results against previously obtained results. They should agree within 10%.

8.3.5 If the above is in control then start the sample analysis.

8.4 Sample Analysis.

8.4.1 To minimize gasoline vapor in the laboratory, load the sample tray about 5–10 test tubes ahead of the sampler.

8.4.2 Record the sample number on the strip chart corresponding to the appropriate peak.

8.4.3 Every ten samples run the high calibration standard and a previously analyzed sample (duplicate). Also let the sampler skip to check the baseline.

8.4.4 After an acceptable peak (within the calibration range) is obtained, pour the excess sample from the test tube into the waste gasoline can.

8.4.5 Any sample resulting in a peak greater than 0.05 g Pb/gal will be run in duplicate. Samples registering greater than 0.10 g Pb/gal should be diluted with iso-octane or unleaded fuel to fall within the calibration range or a higher level calibration standard curve must be prepared. The higher level curve must be shown to be linear and measurement of lead at these levels must be

shown to be accurate by the analysis of control samples at a higher level of alkyl lead content.

8.5 Shut Down.

8.5.1 Replace the solvent displacement flask with flasks filled with distilled water. Also place all other lines in a beaker of distilled water. Rinse the system with distilled water for 15 minutes.

8.5.2 Withdraw the gasoline from the wash cup and fill with water.

8.5.3 Dispose of all solvent waste in waste glass bottles.

8.5.4 Turn the AAS off after extinguishing the flame. Also turn the recorder and pump off. Remove the platen and release the pump tubing.

8.5.5 Shut the acetylene off at the tank and bleed the line.

9. Quality control.

9.1 Precision.

9.1.1 All duplicate results should be considered suspect if they differ by more than 0.005 g Pb/gal.

9.2 Accuracy.

9.2.1 All quality control standard checks should agree within 10% of the nominal value of the standard.

9.2.2 All spikes should agree within 10% of the known addition.

10. Past quality control data.

10.1 Precision.

10.1.1 Duplicate analysis for 156 samples in a single laboratory has resulted in an average difference of 0.00011 g Pb/gal with a standard deviation of 0.0023.

10.1.2 Replicate analysis in a single laboratory (greater than 5 determinations) of samples at concentrations of 0.010, 0.048, and 0.085 g Pb/gal resulted in relative standard deviations of 4.2%, 3.5%, and 3.3% respectively.

10.2 Accuracy.

10.2.1 The analysis of National Bureau of Standards (NBS) lead in reference fuel of known concentrations in a single laboratory has resulted in found values deviating from the true value for 11 determinations of 0.0322 g Pb/gal by an average of 0.56% with a standard deviation of 6.8%, for 15 determinations of 0.0519 g Pb/gal by an average of -1.1% with a standard deviation of 5.8%, and for 7 determinations of 0.0725 g Pb/gal by an average of 3.5% with a standard deviation of 4.8%.

10.2.2 Twenty-three analyses of blind reference samples in a single laboratory (U.S. EPA, RTP, N.C.) have resulted in found values differing from the true value by an average of -0.0009 g Pb/gal with a standard deviation of 0.004.

10.2.3 In a single laboratory, the average percent recovery of 108 spikes made to samples was 101% with a standard deviation of 5.6%.

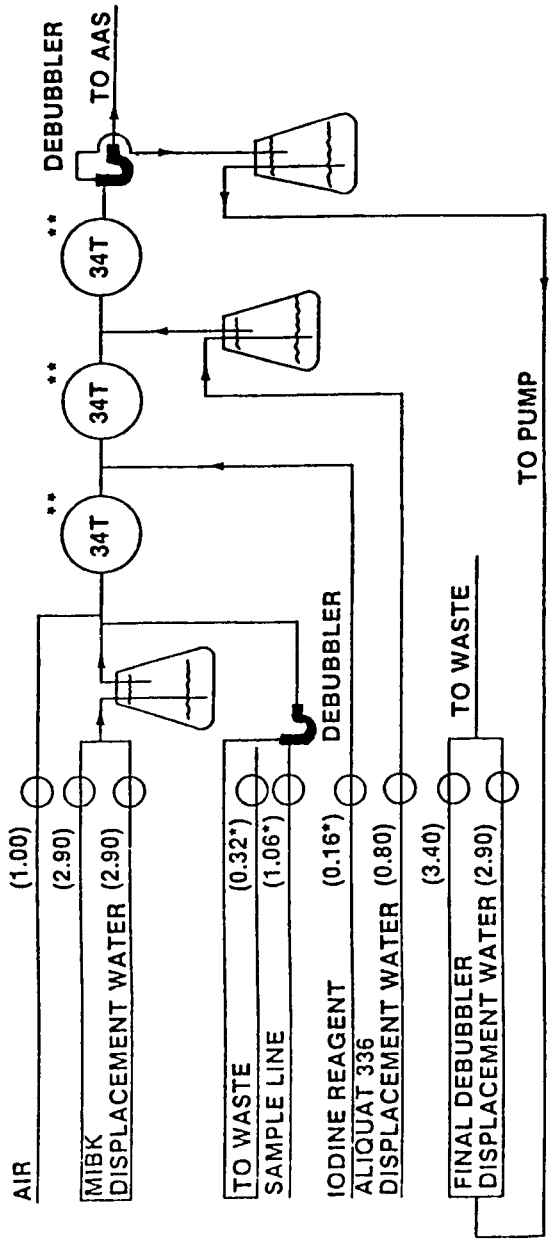

Figure 1

Flow Diagram for the Automated System. (*: Solvaflex pump tubing, **: Technicon part no. 157-0225) Numbers in parentheses refer to the flow rate (ml/min.).

METHOD 3—TEST FOR LEAD IN GASOLINE BY X-RAY SPECTROMETRY

1. Scope and application.

1.1 This method covers the determination of the total lead content of gasoline. The procedure's calibration range is 0.010 to 5.0 grams of lead/U.S. gallon. Samples above this level should be diluted to fall within the range of 0.05 to 5.0 grams of lead/U.S. gallon. The method compensates for variations in gasoline composition and is independent of lead alkyl type.

1.2 This method may be used as an alternative to Method 1—Standard Method Test for Lead in Gasoline by Atomic Absorption Spectrometry, or to Method 2—Automated Method Test for Lead in Gasoline by Atomic Absorption Spectrometry.

1.3 Where trade names or specific products are noted in the method, equivalent apparatus and chemical reagents may be used. Mention of trade names or specific products is for the assistance of the user and does not constitute endorsement by the U.S. Environmental Protection Agency.

2. Summary of method.

2.1 A portion of the gasoline sample is placed in an appropriate holder and loaded into an X-ray spectrometer. The ratio of the net X-ray intensity of the lead L alpha radiation to the net intensity of the incoherently scattered tungsten L alpha radiation is measured. The lead content is determined by reference to a linear calibration equation which relates the lead content to the measured ratio.

2.2 The incoherently scattered tungsten radiation is used to compensate for variations in gasoline samples.

3. Sample handling and preservation.

3.1 Samples should be collected and stored in containers which will protect them from changes in the lead content of the gasoline, such as loss of volatile fractions of the gasoline by evaporation or leaching of the lead into the container or cap.

3.2 If samples have been refrigerated they should be brought to room temperature prior to analysis.

3.3 Gasoline is extremely flammable and should be handled cautiously and with adequate ventilation. The vapors are harmful if inhaled and prolonged breathing of vapors should be avoided. Skin contact should be minimized. See precautionary statements in Annex A1.3.

4. Apparatus.

4.1 X-ray Spectrometer, capable of exciting and measuring the fluorescence lines mentioned in 2.1 and of being operated under the following instrumental conditions or others giving equivalent results: a tungsten target tube operated at 50 kV, a lithium fluoride analyzing crystal, an air or helium optical path and a proportional or scintillation detector.

4.2 Some manufacturers of X-ray Spectrometer units no longer allow use of air as the beam path medium because the X-ray beam produces ozone, which may degrade seals and electronics. In addition, use of the equipment with liquid gasoline in close proximity to the hot X-ray tube could pose flammability problems with any machine in case of a rupture of the sample container. Therefore, use of the helium alternative is recommended.

5. Reagents.

5.1 Isooctane. Isooctane is flammable and the vapors may be harmful. See precautions in Annex A1.1.

5.2 Lead standard solution, in isooctane, toluene or a mixture of these two solvents, containing approximately 5 gm Pb/U.S. gallon may be prepared from a lead-in-oil concentrate such as those prepared by Conostan (Conoco, Inc., Ponca City, Oklahoma). Isooctane and toluene are flammable and the vapors may be harmful. See precautionary statements in Annex A1.1 and A1.2.

6. Calibration.

6.1 Make exact dilutions with isooctane of the lead standard solution to give solutions with concentrations of 0.01, 0.05, 0.10, 0.50, 1.0, 3.0 and 5.0 g Pb/U.S. gallon. If a more limited range is desired as required for linearity, such range shall be covered by at least five standard solutions approximately equally spaced and this range shall not be exceeded by any of the samples. Place each of the standard solutions in a sample cell using techniques consistent with good operating practice for the spectrometer employed. Insert the sample in the spectrometer and allow the spectrometer atmosphere to reach equilibrium (if appropriate). Measure the intensity of the lead L alpha peak at 1.175 angstroms, the Compton scatter peak of the tungsten L alpha line at 1.500 angstroms and the background at 1.211 angstroms. Each measured intensity should exceed 200,000 counts or the time of measurement should be at least 30 seconds. The relative standard deviation of each measurement, based on counting statistics, should be one percent or less. The Compton scatter peak given above is for 90° instrument geometry and should be changed for other geometries. The Compton scatter peak (in angstroms) is found at the wavelength of the tungsten L alpha line plus 0.024 (1-cos phi), where phi is the angle between the incident radiation and the take-off collimator.

6.2 For Each of the standards, as well as for an isooctane blank, determine the net lead intensity by subtracting the corrected

background from the gross intensity. Determine the corrected background by multiplying the intensity of the background at 1.211 angstroms by the following ratio obtained on an isooctane blank:

$$\frac{\text{Background at 1.175 angstroms}}{\text{Background at 1.211 angstroms}}$$

6.3 Determine the corrected lead intensity ratio, which is the net lead intensity corrected for matrix effects by division by the net incoherently scattered tungsten radiation. The net scattered intensity is calculated by subtracting the background intensity at 1.211 angstroms from the gross intensity of the incoherently scattered tungsten L alpha peak. The equation for the corrected lead intensity ratio follows:

$$R = \frac{\text{Lead L alpha–background}}{\text{Incoherent tungsten L alpha–corrected background}}$$

6.4 Obtain a linear calibration curve by performing a least squares fit of the corrected lead intensity ratios to the standard concentrations.

7. Procedure.

7.1 Prepare a calibration curve as described in 6. Since the scattered tungsten radiation serves as an internal standard, the calibration curve should serve for at least several days. Each day the suitability of the calibration curve should be checked by analyzing several National Bureau of Standards (NBS) lead-in-reference-fuel standards or other suitable standards.

7.2 Determine the corrected lead intensity ratio for a sample in the same manner as was done for the standards. The samples should be brought to room temperature before analysis.

7.3 Determine the lead concentration of the sample from the calibration curve. If the sample concentration is greater than 5.0 g Pb/U.S. gallon or the range calibrated for in 6.1, the sample should be diluted so that the result is within the calibration span of the instrument.

7.4 Quality control standards, such as NBS standard reference materials, should be analyzed at least once every testing session.

7.5 For each group of ten samples, a spiked sample should be prepared by adding a known amount of lead to a sample. This known addition should be at least 0.05 g Pb/U.S. gallon, at least 50% of the measured lead content of the unspiked sample, and not more than 200% of the measured lead content of the unspiked sample (unless the minimum addition of 0.05 g Pb/U.S. gallon exceeds 200%). Both the spiked and unspiked samples should be analyzed.

8. Quality control.

8.1 The difference between duplicates should not exceed 0.005 g Pb/U.S. gallon or a relative difference of 6%.

8.2 All quality control standard check samples should agree within 10% of the nominal value of the standard.

8.3 All spiked samples should have a percent recovery of 100% ±10%. The percent recovery, P, is calculated as follows:

$$P = 100 \times (A–B)/K$$

where

A = the analytical result from the spiked sample, B = the analytical result from the unspiked sample, and K = the known addition.

8.4 The difference between independent analyses of the same sample in different laboratories should not exceed 0.01 g Pb/U.S. gallon or a relative difference of 12%.

9. *Past quality control data.*

9.1 Duplicate analysis for 26 samples in the range of 0.01 to 0.10 g Pb/U.S. gallon resulted in an average relative difference of 5.2% with a standard deviation of 5.4%. Duplicate analysis of 14 samples in the range 0.1 to 0.5 g Pb/U.S. gallon resulted in an average relative difference of 2.3% with a standard deviation of 2.0. Duplicate analysis of 47 samples in the range of 0.5 to 5 g Pb/U.S. gallon resulted in an average relative difference of 2.1% with a standard deviation of 1.8%.

9.2 The average percent recovery for 23 spikes made to samples in the 0.0 to 0.1 g Pb/U.S. gallon range was 103% with a standard deviation of 3.2%. For 42 spikes made to samples in the 0.1 to 5.0 g Pb/U.S. gallon range, the average percent recovery was 102% with a standard deviation of 4.2%.

9.3 The analysis of National Bureau of Standards lead-in-reference-fuel standards of known concentrations in a single laboratory has resulted in found values deviating from the true value for 14 determinations of 0.0490 g Pb/U.S. gallon by an average of 2.8% with a standard deviation of 6.4%, for 11 determinations of 0.065 g Pb/U.S. gallon by an average of 4.4% with a standard deviation of 2.9%, and for 15 determinations of 1.994 g Pb/U.S. gallon by an average of 0.3% with a standard deviation of 1.3%.

9.4 Eighteen analyses of reference samples (U.S. EPA, Research Triangle Park, NC) have resulted in found values differing from the true value by an average of 0.0004 g Pb/U.S. gallon with a standard deviation of 0.004 g Pb/U.S. gallon.

ANNEX

A1. Precautionary Statements

A1.1 ISOOCTANE

Danger—Extremely flammable. Vapors harmful if inhaled.
Vapor may cause flash fire.
Keep away from heat, sparks, and open flame.
Vapors are heavier than air and may gather in low places, resulting in explosion hazard.
Keep container closed.
Use adequate ventilation.
Avoid buildup of vapors.
Avoid prolonged breathing of vapor or spray mist.
Avoid prolonged or repeated skin contact.

A1.2 TOLUENE

Warning—Flammable. Vapor harmful.
Keep away from heat, sparks, and open flame.
Keep container closed.
Use with adequate ventilation.
Avoid breathing of vapor or spray mist.
Avoid prolonged or repeated contact with skin.

A1.3 GASOLINE

Danger—Extremely flammable. Vapors harmful if inhaled.
Vapor may cause flash fire.
Keep away from heat, sparks, and open flame.
Vapors are heavier than air and may gather in low places, resulting in explosion hazard.
Keep container closed.
Use adequate ventilation.
Avoid buildup of vapors.
Avoid prolonged breathing of vapor or spray mist.
Avoid prolonged or repeated skin contact.

[39 FR 24891, July 8, 1974; 39 FR 25653, July 12, 1974; 39 FR 26287, July 18, 1974, as amended at 47 FR 765, Jan. 7, 1982; 52 FR 259, Jan. 5, 1987; 56 FR 13768, Apr. 4, 1991]

APPENDIX C TO PART 80 [RESERVED]

APPENDIX D TO PART 80—SAMPLING PROCEDURES FOR FUEL VOLATILITY

1. Scope.

1.1 This method covers procedures for obtaining representative samples of gasoline for the purpose of testing for compliance with the Reid vapor pressure (RVP) standards set forth in § 80.27.

2. Summary of method.

2.1 It is necessary that the samples be truly representative of the gasoline in question. The precautions required to ensure the representative character of the samples are numerous and depend upon the tank, carrier, container or line from which the sample is being obtained, the type and cleanliness of the sample container, and the sampling procedure that is to be used. A summary of the sampling procedures and their application is presented in Table 1. Each procedure is suitable for sampling a material under definite storage, transportation, or container conditions. The basic principle of each procedure is to obtain a sample in such manner and from such locations in the tank or other container that the sample will be truly representative of the gasoline.

3. Description of terms.

3.1 *Average sample* is one that consists of proportionate parts from all sections of the container.

3.2 *All-levels sample* is one obtained by submerging a stoppered beaker or bottle to a point as near as possible to the draw-off level, then opening the sampler and raising it at a rate such that it is 70–85% full as it emerges from the liquid. An all-levels sample is not necessarily an average sample because the tank volume may not be proportional to the depth and because the operator may not be able to raise the sampler at the variable rate required for proportionate filling. The rate of filling is proportional to the square root of the depth of immersion.

3.3 *Running sample* is one obtained by lowering an unstoppered beaker or bottle from the top of the gasoline to the level of the bottom of the outlet connection or swing line, and returning it to the top of the gasoline at a uniform rate of speed such that the beaker or bottle is 70–85% full when withdrawn from the gasoline.

3.4 *Spot sample* is one obtained at some specific location in the tank by means of a thief bottle, or beaker.

3.5 *Top sample* is a spot sample obtained 6 inches (150 mm) below the top surface of the liquid (Figure 1).

3.6 *Upper sample* is a spot sample taken at the mid-point of the upper third of the tank contents (Figure 1).

3.7 *Middle sample* is a spot sample obtained from the middle of the tank contents (Figure 1).

3.8 *Lower sample* is a spot sample obtained at the level of the fixed tank outlet or the swing line outlet (Figure 1).

3.9 *Clearance sample* is a spot sample taken 4 inches (100 mm) below the level of the tank outlet (Figure 1).

3.10 *Bottom sample* is one obtained from the material on the bottom surface of the tank, container, or line at its lowest point.

3.11 *Drain sample* is one obtained from the draw-off or discharge valve. Occasionally, a drain sample may be the same as a bottom sample, as in the case of a tank car.

3.12 *Continuous sample* is one obtained from a pipeline in such manner as to give a representative average of a moving stream.

3.13 *Mixed sample* is one obtained after mixing or vigorously stirring the contents of the original container, and then pouring out or drawing off the quantity desired.

3.14 *Nozzle sample* is one obtained from a gasoline pump nozzle which dispenses gasoline from a storage tank at a retail outlet or a wholesale purchaser-consumer facility.

4. Sample containers.

4.1 Sample containers may be clear or brown glass bottles, or cans. The clear glass bottle is advantageous because it may be examined visually for cleanliness, and also allows visual inspection of the sample for free water or solid impurities. The brown glass bottle affords some protection from light. Cans with the seams soldered on the exterior surface with a flux of rosin in a suitable solvent are preferred because such a flux is easily removed with gasoline, whereas many others are very difficult to remove. If such cans are not available, other cans made with a welded construction that are not affected by, and that do not affect, the gasoline being sampled are acceptable.

4.2 *Container closure.* Closure devices may be used as long as they meet the following test: The quality of closures and containers must be determined by the particular laboratory or company doing the testing through the analysis of at least six sample pairs of gasoline and gasoline-oxygenate blends. The six sample pairs must include at least one pair of ethanol at 10 percent and one pair of MTBE at 15 percent. The second half of the pair must be analyzed in a period of no less than 90 days after the first. The data obtained must meet the following criteria and should be made available to the EPA upon request;

n = number of pairs

d = duplicate bottle's-initial bottle's vapor pressure

t = student t statistic; the double sided 95% confidence interval for $n-1$ degrees of freedom

$\Sigma\ d/n \pm (2)^{1/2} * t * ((\Sigma\ d^2 - (\Sigma\ d)^2/n)/(n-1))^{1/2} \leq 0.38$ psi

4.2.1 Screw caps must be protected by material that will not affect petroleum or petroleum products. A phenolic screw cap with a teflon coated liner may be used, since it has met the requirements of the above performance test upon EPA analysis.

4.3 *Cleaning procedure.* The method of cleaning all sample containers must be consistent with the residual materials in the container and must produce sample containers that are clean and free of water, dirt, lint, washing compounds, naphtha or other solvents, soldering fluxes, and acids, corrosion, rust, and oil. New sample containers should be inspected and cleaned if necessary. Dry either the container by passing a current of clean, warm air through the container or by allowing it to air dry in a clean area at room temperature. When dry, stopper or cap the container immediately.

5. Sampling apparatus.

5.1 Sampling apparatus is described in detail under each of the specific sampling procedures. Clean, dry, and free all sampling apparatus from any substance that might contaminate the material, using the procedure described in 4.3.

6. Time and place of sampling.

6.1 When loading or discharging gasoline, take samples from both shipping and receiving tanks, and from the pipeline if required.

6.2 *Ship or barge tanks.* Sample each product after the vessel is loaded or just before unloading.

6.3 *Tank cars.* Sample the product after the car is loaded or just before unloading.

NOTE: When taking samples from tanks suspected of containing flammable atmospheres, precautions should be taken to guard against ignitions due to static electricity. No object or material should be lowered into or suspended in a compartment of a tank which is being filled. A recommended waiting period of no less than five minutes after cessation of pumping will generally permit a substantial relaxation of the electrostatic charge for small volume vessels such as tank cars and tank trucks; under certain conditions a longer period may be deemed advisable. A recommended waiting period of no less than 30 minutes will generally permit a substantial relaxation of the electrostatic charge for large volume vessels such as storage tanks or ship tanks; under certain conditions a longer period may be deemed advisable.

7. Obtaining samples.

7.1 Directions for sampling cannot be made explicit enough to cover all cases. Extreme care and good judgment are necessary to ensure samples that represent the general character and average condition of the material. Clean hands are important. Clean gloves may be worn but only when absolutely necessary, such as in cold weather, or when handling materials at high temperature, or for reasons of safety. Select wiping cloths so that lint is not introduced, contaminating samples.

7.2 As many petroleum vapors are toxic and flammable, avoid breathing them or igniting them from an open flame or a spark produced by static. Follow all safety precautions specific to the material being sampled.

7.3 When sampling relatively volatile products (more than 2 pounds (0.14 kgf/cm^2) RVP), the sampling apparatus shall be filled and allowed to drain before drawing the sample. If the sample is to be transferred to another container, this container shall also be rinsed with some of the volatile product and then drained. When the actual sample is emptied into this container, the sampling apparatus should be upended into the opening of the sample container and remain in this position until the contents have been transferred so that no unsaturated air will be entrained in the transfer of the sample.

8. Handling samples.

8.1 *Volatile samples.* It is necessary to protect all volatile samples of gasoline from evaporation. Transfer the product from the sampling apparatus to the sample container immediately. Keep the container closed except when the material is being transferred. After delivery to the laboratory, volatile samples should be cooled before the container is opened.

8.2 *Container outage.* Never completely fill a sample container, but allow adequate room for expansion, taking into consideration the temperature of the liquid at the time of filling and the probable maximum temperature to which the filled container may be subjected.

9. Shipping samples.

9.1 To prevent loss of liquid and vapors during shipment, and to protect against moisture and dust, cover the stoppers of glass bottles with plastic caps that have been swelled in water, wiped dry, placed over the tops of the stoppered bottles, and allowed to shrink tightly in place. The caps of metal containers must be screwed down tightly and checked for leakage. Postal and express office regulations applying to the shipment of flammable liquids must be observed.

10. Labeling sample containers.

10.1 Label the container immediately after a sample is obtained. Use waterproof and oilproof ink, or a pencil hard enough to dent the tag, since soft pencil and ordinary ink markings are subject to obliteration from moisture, oil smearing and handling. An indelible identification symbol, such as a bar code, may be used in lieu of a manually addressed label. The label shall reference the following information:

10.1.1 Date and time (the period elapsed during continuous sampling);

10.1.2 Name of the sample;

10.1.3 Name or number and owner of the vessel, car, or container;

10.1.4—Brand and grade of material; and

10.1.5—Reference symbol or identification number.

11. Sampling procedures.

11.1 The standard sampling procedures described in this method are summarized in Table 1. Alternative sampling procedures may be used if a mutually satisfactory agreement has been reached by the party(ies) involved and EPA and such agreement has been put in writing and signed by authorized officials.

11.2 Bottle or beaker sampling. The bottle or beaker sampling procedure is applicable for sampling liquids of 16 pounds (1.12 kgf/cm^2) RVP or less in tank cars, tank trucks, shore tanks, ship tanks, and barge tanks.

11.2.1 *Apparatus.* A suitable sampling bottle or beaker as shown in figure 2 is required. Recommended diameter of opening in the bottle or beaker is ¾ inch (19 mm).

11.2.2 *Procedure.*

11.2.2.1 *All-levels sample.* Lower the weighted, stoppered bottle or beaker as near as possible to the draw-off level, pull out the stopper with a sharp jerk of the cord or chain and raise the bottle at a uniform rate so that it is 70–85% full as it emerges from the liquid.

11.2.2.2 *Running sample.* Lower the unstoppered bottle or beaker as near as possible to the level of the bottom of the outlet connection or swing line and then raise the bottle or beaker to the top of the gasoline at a uniform rate of speed such that it is 70–85% full when withdrawn from the gasoline.

11.2.2.3 *Upper, middle, and lower samples.* Lower the weighted, stoppered bottle to the proper depths (Figure 1) as follows:

Upper sample	middle of upper third of the tank contents
Middle sample	middle of the tank contents
Lower sample	level of the fixed tank outlet or the swing-line outlet

At the selected level pull out the stopper with a sharp jerk of the cord or chain and allow the bottle or beaker to fill completely, as evidenced by the cessation of air bubbles. When full, raise the bottle or beaker, pour off a small amount, and stopper immediately.

11.2.2.4 *Top sample.* Obtain this sample (Figure 1) in the same manner as specified in 11.2.2.3 but at six inches (150 mm) below the top surface of the tank contents.

11.2.2.5 *Handling.* Stopper and label bottle samples immediately after taking them, and deliver to the laboratory in the original sampling bottles.

11.3 *Tap sampling.* The tap sampling procedure is applicable for sampling liquids of

twenty-six pounds (1.83 kgf/cm^2) RVP or less in tanks which are equipped with suitable sampling taps or lines. This procedure is recommended for volatile stocks in tanks of the breather and balloon roof type, spheroids, etc. (Samples may be taken from the drain cocks of gage glasses, if the tank is not equipped with sampling taps.) The assembly for tap sampling is shown in figure 3.

11.3.1 *Apparatus.*

11.3.1.1 *Tank taps.* The tank should be equipped with at least three sampling taps placed equidistant throughout the tank height and extending at least three feet (0.9 meter) inside the tank shell. A standard ¼ inch pipe with suitable valve is satisfactory.

11.3.1.2 *Tube.* A delivery tube that will not contaminate the product being sampled and long enough to reach to the bottom of the sample container is required to allow submerged filling.

11.3.1.3 *Sample containers.* Use clean, dry glass bottles of convenient size and strength or metal containers to receive the samples.

11.3.2 *Procedure.* Before a sample is drawn, flush the tap (or gage glass drain cock) and line until they are purged completely. Connect the clean delivery tube to the tap. Draw upper, middle, or lower samples directly from the respective taps after the flushing operation. Stopper and label the sample container immediately after filling, and deliver it to the laboratory.

11.4 *Continuous sampling.* The continuous sampling procedure is applicable for sampling liquids of 16 pounds (1.12 kgf/cm^2) RVP or less and semiliquids in pipelines, filling lines, and transfer lines. The continuous sampling may be done manually or by using automatic devices.

11.4.1 *Apparatus.*

11.4.1.1 *Sampling probe.* The function of the sampling probe is to withdraw from the flow stream a portion that will be representative of the entire stream. The apparatus assembly for continuous sampling is shown in figure 4. Probe designs that are commonly used are as follows:

11.4.1.1.1 A tube extending to the center of the line and beveled at a 45 degree angle facing upstream (Figure 4(a)).

11.4.1.1.2 A long-radius forged elbow or pipe bend extending to the center line of the pipe and facing upstream. The end of the probe should be reamed to give a sharp entrance edge (Figure 4(b)).

11.4.1.1.3 A closed-end tube with a round orifice spaced near the closed end which should be positioned in such a way that the orifice is in the center of the pipeline and is facing the stream as shown in figure 4(c)).

11.4.1.2 *Probe location.* Since the fluid to be sampled may not in all cases be homogeneous, the location, the position and the size of the sampling probe should be such as to minimize stratification or dropping out of heavier particles within the tube or the displacement of the product within the tube as a result of variation in gravity of the flowing stream. The sampling probe should be located preferably in a vertical run of pipe and as near as practicable to the point where the product passes to the receiver. The probe should always be in a horizontal position.

11.4.1.2.1 The sampling lines should be as short as practicable and should be cleared before any samples are taken.

11.4.1.2.2 Where adequate flowing velocity is not available, a suitable device for mixing the fluid flow to ensure a homogeneous mixture at all rates of flow and to eliminate stratification should be installed upstream of the sampling tap. Some effective devices for obtaining a homogeneous mixture are as follows: Reduction in pipe size; a series of baffles; orifice or perforated plate; and a combination of any of these methods.

11.4.1.2.3 The design or sizing of these devices is optional with the user, as long as the flow past the sampling point is homogeneous and stratification is eliminated.

11.4.1.3 To control the rate at which the sample is withdrawn, the probe or probes should be fitted with valves or plug cocks.

11.4.1.4 Automatic sampling devices that meet the standards set out in 11.4.1.5 may be used in obtaining samples of gasoline. The quality of sample collected must be of sufficient size for analysis, and its composition should be identical with the composition of the batch flowing in the line while the sample is being taken. An automatic sampler installation necessarily includes not only the automatic sampling device that extracts the samples from the line, but also a suitable probe, connecting lines, auxiliary equipment, and a container in which the sample is collected. Automatic samplers may be classified as follows:

11.4.1.4.1 Continuous sampler, time cycle (nonproportional) type. A sampler designed and operated in such a manner that it transfers equal increments of liquid from the pipeline to the sample container at a uniform rate of one or more increments per minute is a continuous sampler.

11.4.1.4.2 Continuous sampler, flow-responsive (proportional) type. A sampler that is designed and operated in such a manner that it will automatically adjust the quantity of sample in proportion to the rate of flow is a flow-responsive (proportional) sampler. Adjustment of the quantity of sample may be made either by varying the frequency of transferring equal increments of sample to the sample container, or by varying the volume of the increments while maintaining a constant frequency of transferring the increments to the sample container. The apparatus assembly for continuous sampling is shown in figure 4.

11.4.1.4.3 *Intermittent sampler*. A sampler that is designed and operated in such a manner that it transfers equal increments of liquid from a pipeline to the sample container at a uniform rate of less than one increment per minute is an intermittent sampler.

11.4.1.5 *Standards of installation*. Automatic sampler installations should meet all safety requirements in the plant or area where used, and should comply with American National Standard Code for Pressure Piping, and other applicable codes (ANSI B31.1). The sampler should be so installed as to provide ample access space for inspection and maintenance.

11.4.1.5.1 Small lines connecting various elements of the installation should be so arranged that complete purging of the automatic sampler and of all lines can be accomplished effectively. All fluid remaining in the sampler and the lines from the preceding sampling cycle should be purged immediately before the start of any given sampling operation.

11.4.1.5.2 In those cases where the sampler design is such that complete purging of the sampling lines and the sampler is not possible, a small pump should be installed in order to circulate a continuous stream from the sampling tube past or through the sampler and back into the line. The automatic sampler should then withdraw the sample from the sidestream through the shortest possible connection.

11.4.1.5.3 Under certain conditions, there may be a tendency for water and heavy particles to drop out in the discharge line from the sampling device and appear in the sample container during some subsequent sampling period. To circumvent this possibility, the discharge pipe from the sampling device should be free of pockets or enlarged pipe areas, and preferably should be pitched downward to the sample container.

11.4.1.5.4 To ensure clean, free-flowing lines, piping should be designed for periodic cleaning.

11.4.1.6 *Field calibration*. Composite samples obtained from the automatic sampler installation should be verified for quantity performance in a manner that meets with the approval of all parties concerned (including EPA), at least once a month and more often if conditions warrant. In the case of time-cycle samplers, deviations in quantity of the sample taken should not exceed ± five percent for any given setting. In the case of flow-responsive samplers, the deviation in quantity of sample taken per 1,000 barrels of flowing stream should not exceed ± five percent. For the purpose of field-calibrating an installation, the composite sample obtained from the automatic sampler under test should be verified for quality by comparing on the basis of physical and chemical properties, with either a properly secured continuous nonautomatic sample or tank sample. The tank sample should be taken under the following conditions:

11.4.1.6.1 The batch pumped during the test interval should be diverted into a clean tank and a sample taken within one hour after cessation of pumping.

11.4.1.6.2 If the sampling of the delivery tank is to be delayed beyond one hour, then the tank selected must be equipped with an adequate mixing means. For valid comparison, the sampling of the delivery tank must be completed within eight hours after cessation of pumping, even though the tank is equipped with a motor-driven mixer.

11.4.1.6.3 When making a normal full-tank delivery from a tank, a properly secured sample may be used to check the results of the sampler if the parties (including EPA) mutually agree to this procedure.

11.4.1.7 *Receiver*. The receiver must be a clean, dry container of convenient size to receive the sample. All connections from the sample probe to the sample container must be free of leaks. Two types of containers may be used, depending upon service requirements.

11.4.1.7.1 *Atmospheric container*. The atmospheric container shall be constructed in such a way that it retards evaporation loss and protects the sample from extraneous material such as rain, snow, dust, and trash. The construction should allow cleaning, interior inspection, and complete mixing of the sample prior to removal. The container should be provided with a suitable vent.

11.4.1.7.2 *Closed container*. The closed container shall be constructed in such a manner that it prevents evaporation loss. The construction must allow cleaning, interior inspection and complete mixing of the sample prior to removal. The container should be equipped with a pressure-relief valve.

11.4.2 *Procedure*.

11.4.2.1 *Nonautomatic sample*. Adjust the valve or plug cock from the sampling probe so that a steady stream is drawn from the probe. Whenever possible, the rate of sample withdrawal should be such that the velocity of liquid flowing through the probe is approximately equal to the average linear velocity of the stream flowing through the pipeline. Measure and record the rate of sample withdrawal as gallons per hour. Divert the sample stream to the sampling container continuously or intermittently to provide a quantity of sample that will be of sufficient size for analysis.

11.4.2.2 *Automatic sampling*. Purge the sampler and the sampling lines immediately before the start of a sampling operation. If the sample design is such that complete purging is not possible, circulate a continuous stream from the probe past or through the sampler and back into the line. Withdraw the sample from the side stream through the automatic sampler using the shortest possible connections. Adjust the

sampler to deliver not less than one and not more than 40 gallons (151 liters) of sample during the desired sampling period. For time-cycle samplers, record the rate at which sample increments were taken per minute. For flow-responsive samplers, record the proportion of sample to total stream. Label the samples and deliver them to the laboratory in the containers in which they were collected.

11.5 *Nozzle sampling*. The nozzle sampling procedure is applicable for sampling gasoline from a retail outlet or wholesale purchaser-consumer facility storage tank.

11.5.1 *Apparatus*. Sample containers conforming with section 4.1 should be used. A spacer, if appropriate (figure 6), and a nozzle extension device similar to that shown in figures 7, 7a, or 7b shall be used when nozzle sampling. The nozzle extension device does not need to be identical to that shown in figures 7, 7a, or 7b but it should be a device that will bottom fill the container with a minimum amount of vapor loss.

11.5.2 *Retail sampling procedure*

11.5.2.1 If a nozzle extension as found in figure 7 or 7a is used, 3 gallons of gasoline should first be dispensed from the pump nozzle to purge the pump hose and nozzle. Then a small amount of product should be dispensed through the nozzle extension into the sample container to rinse the sample container. A pump nozzle spacer (figure 6) may be used if the pump is a vapor recovery type. Rinse the sample container and discard the waste product into an appropriate container. Insert the nozzle extension (figure 7 or 7a) into the sample container and insert the pump nozzle into the extension with slot over the air bleed hole (when using figure 7). Fill the sample container slowly through the nozzle extension to 70–85 percent full (figure 8). Remove the nozzle extension. Cap the sample container at once. Check for leaks. Discard the sample container and re-sample if leak occurs. If the sample container is leak tight, label the container and deliver it to the laboratory.

11.5.2.2 If a nozzle extension as found in figure 7b is used, 3 gallons of gasoline should first be dispensed from the pump nozzle to purge the pump hose and nozzle. Then screw a dry and dirt free 4 oz sample bottle container onto the bottle filling fixture. Insert the nozzle into the nozzle extension. Insert the discharge end of the modified nozzle extension into a gasoline safety can or into the filler neck of a vehicle. Obtain the sample by pumping at least 0.2 gallon through the sampler. Remove the sample bottle from the fixture. The sample must be 70–85 percent full. Cap the sample container at once. Check for leaks. Discard the sample container and re-sample if a leak occurs. If the sample container is leak tight, label the container and deliver it to the laboratory.

12. Special Precautions and Instructions.

12.1 *Precautions*. Vapor pressures are extremely sensitive to evaporation losses and to slight changes in composition. When obtaining, storing, or handling samples, observe the necessary precautions to ensure samples representative of the product and satisfactory for RVP tests. Official samples should be taken by, or under the immediate supervision of, a person of judgment, skill, and sampling experience. Never prepare composite samples for this test. Make certain that containers which are to be shipped by common carrier conform to applicable Interstate Commerce Commission, State, and local regulations. When flushing or purging lines or containers, observe the pertinent regulations and precautions against fire, explosion, and other hazards.

12.2 *Sample containers*. For nozzle sampling, use containers of not less than 4 ounces (118 ml) nor more than two gallons (7.6 liters) capacity, of sufficient strength to withstand the pressure to which they may be subjected, and of a type that will permit replacement of the cap or stopper with suitable connections for the transfer of the sample to the gasoline chamber of the vapor pressure testing apparatus. For running or all-level sampling procedures, use containers of not less than one quart (0.9 liter) nor more than two gallons (7.6 liters) capacity. Open-type containers have a single opening which permits sampling by immersion. Closed-type containers have two openings, one in each end (or the equivalent thereof), fitted with valves suitable for sampling by purging.

12.3 *Transfer connections*. The transfer connection for the open-type container consists of an air tube and a liquid delivery tube assembled in a cap or stopper. The air tube extends to the bottom of the container. One end of the liquid delivery tube is flush with the inside face of the cap or stopper and the tube is long enough to reach the bottom of the gasoline chamber while the sample is being transferred to the chamber. The transfer connection for the closed-type container consists of a single tube with a connection suitable for attaching it to one of the openings of the sample container. The tube is long enough to reach the bottom of the gasoline chamber while the sample is being transferred.

12.4 *Sampling open tanks*. Use clean containers of the open type when sampling open tanks and tank cars. An all-levels or a running sample obtained by the bottle procedure described in 11.2 is recommended. When the question exists of stratification of the contents of the tank, it is recommended that either a running or all-levels sample be taken along with upper, middle, and lower spot sampling. Before taking the sample, flush the container by immersing it in the product

to be sampled. Then obtain the sample immediately. The sample must be 70–85 percent full. Close the container promptly and confirm it is not leaking. Label the container and deliver it to the laboratory.

12.5. *Sampling closed tanks.* Containers of the closed type may be used to obtain samples from closed or pressure tanks. Obtain the sample using the purging procedure described in 12.6.

12.6 *Purging procedure.* Connect the inlet valve of the closed-type container to the tank sampling tap or valve. Throttle the outlet valve of the container so that the pressure in it will be approximately equal to that in the container being sampled. Allow a volume of product equal to at least twice that of the container to flow through the sampling system. Then close all valves, the outlet valve first, the inlet valve of the container second, and the tank sampling valve last, and disconnect the container immediately. Withdraw enough of the contents so that the sample container will be 70–80 percent full. If the vapor pressure of the product is not high enough to force liquid from the container, open both the upper and lower valves slightly to remove the excess. Promptly seal and label the container, and deliver it to the laboratory.

TABLE 1—SUMMARY OF GASOLINE SAMPLING PROCEDURES AND APPLICABILITY

Type of container	Procedure	Paragraph
Storage tanks, ship and barge tanks, tank cars, tank trucks.	Bottle sampling.	11.2
Storage tanks with taps	Tap sampling..	11.3
Pipes and lines	Continuous line sampling.	11.4
Retail outlet and whole-sale purchaser-consumer facility storage tanks.	Nozzle sampling.	11.5

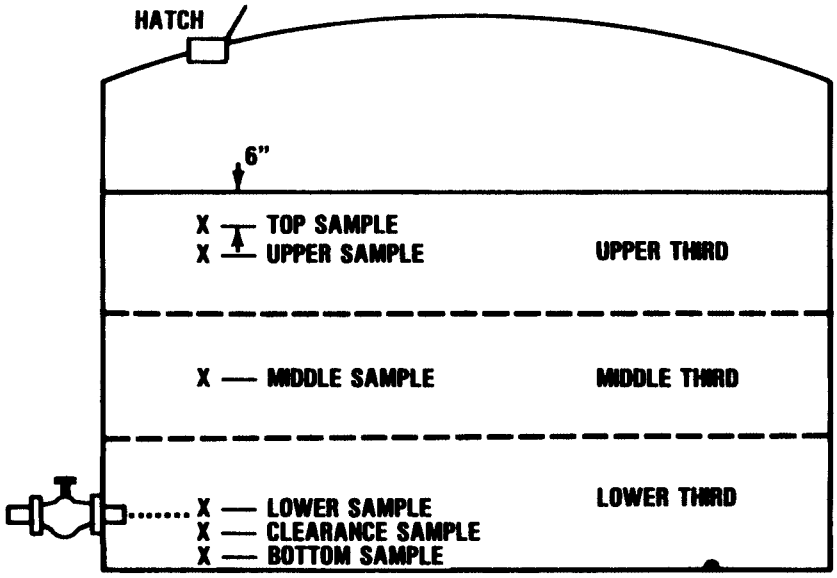

Figure 1. Sampling Depths

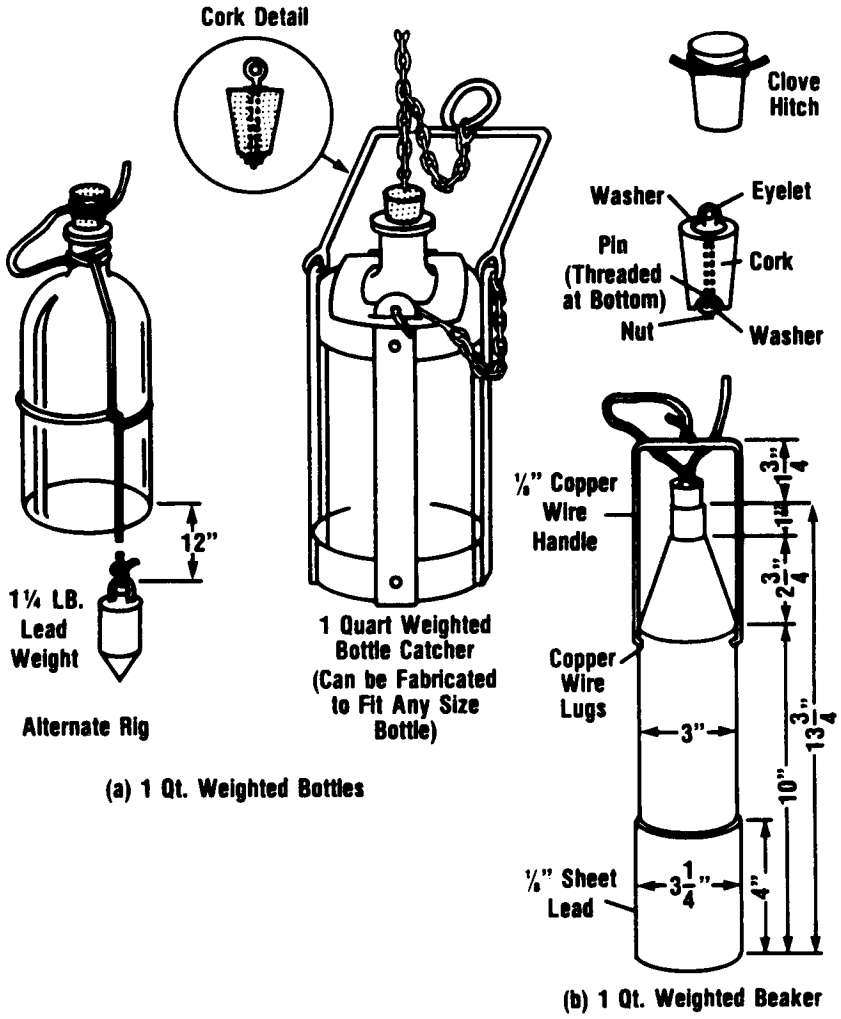

METRIC EQUIVALENTS

in.	⅛	1	1¾	2¾	3¼	4	10	12	13¾
mm	3	25	45	70	83	102	250	300	350

Figure 2. Assembly for Bottle Sampling

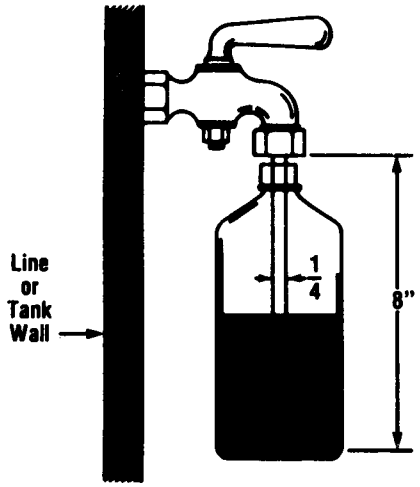

Figure 3. Assembly for Tap Sampling

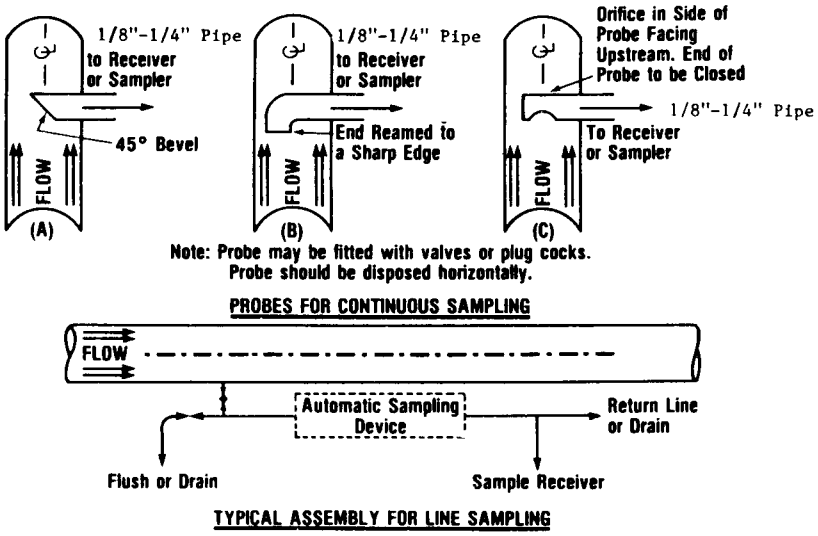

Figure 4. Probes for Continuous Sampling

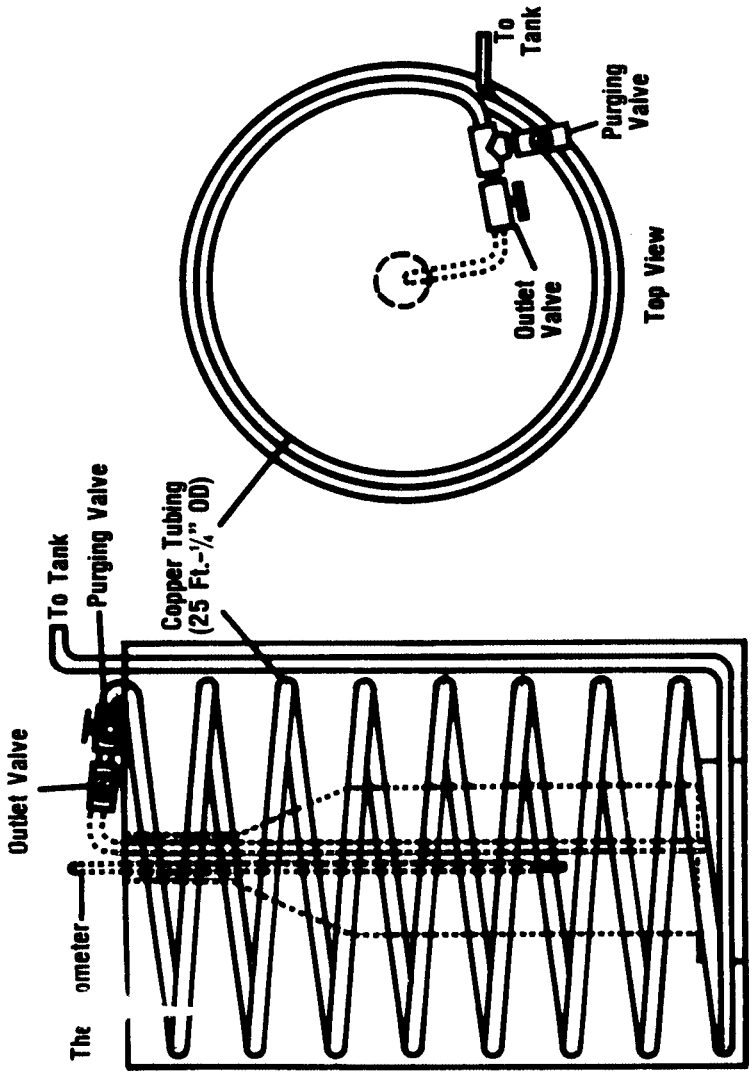

Figure 5. Cooling Bath for Reid Vapor Pressure Sampling

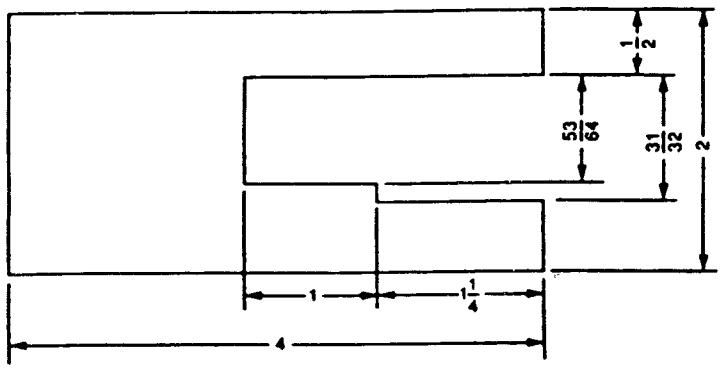

Make from 1/4 Inch flat stock (recommend non-ferrous material)
All dimensions in inches
Scale: 1inch = 1 inch
Break all edges and corners

Figure 6. Spacer for Nozzle Sampling

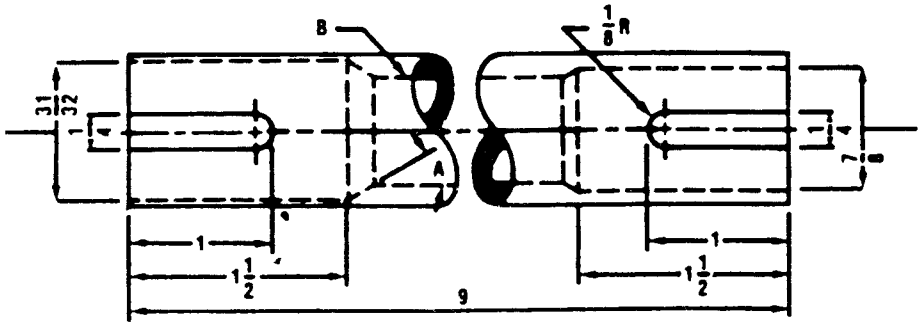

Use ¼ in. Schedule 80 Black Iron Pipe
All dimensions in inches
All tolerances ± 1/128

A—Recommend 30°
B—Inside Diameter Schedule 80 Black Iron Pipe

Figure 7. Nozzle Extension for Nozzle Sampling

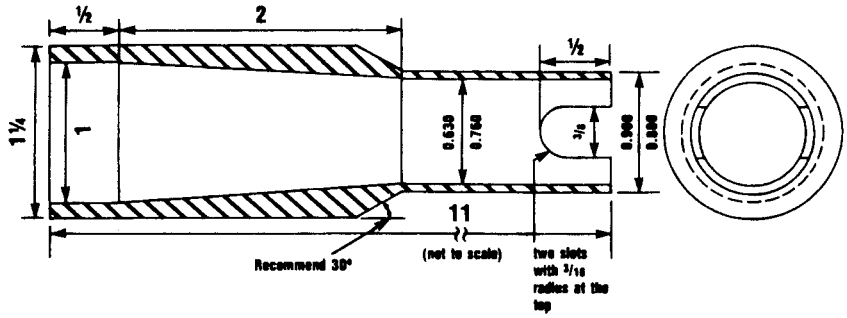

All Dimensions in inches (full scale except as noted)
All decimal dimensions represent minimum and maximum
Tolerance for all other dimensions is ± 1/32"
Made of non-ferrous material, uneffected by gasoline

Figure 7a. Nozzle Extension for Nozzle Sampling

(Compatible with narrow neck sample containers)

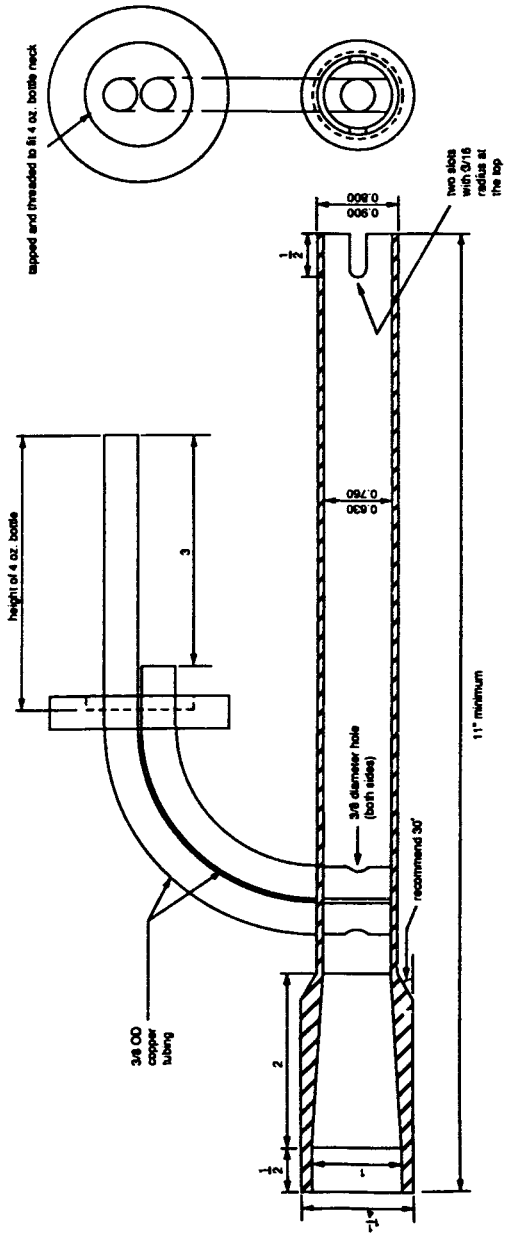

All dimensions in inches
All decimal dimensions represent minimum and maximum
Tolerance for all other dimensions is ± 1/32"
Made of non-ferrous material, uneffected by gasoline
Scale: 0.700 inch = 1 inch

Figure 7b. Nozzle Extension for Nozzle Sampling with 4 ounce bottle

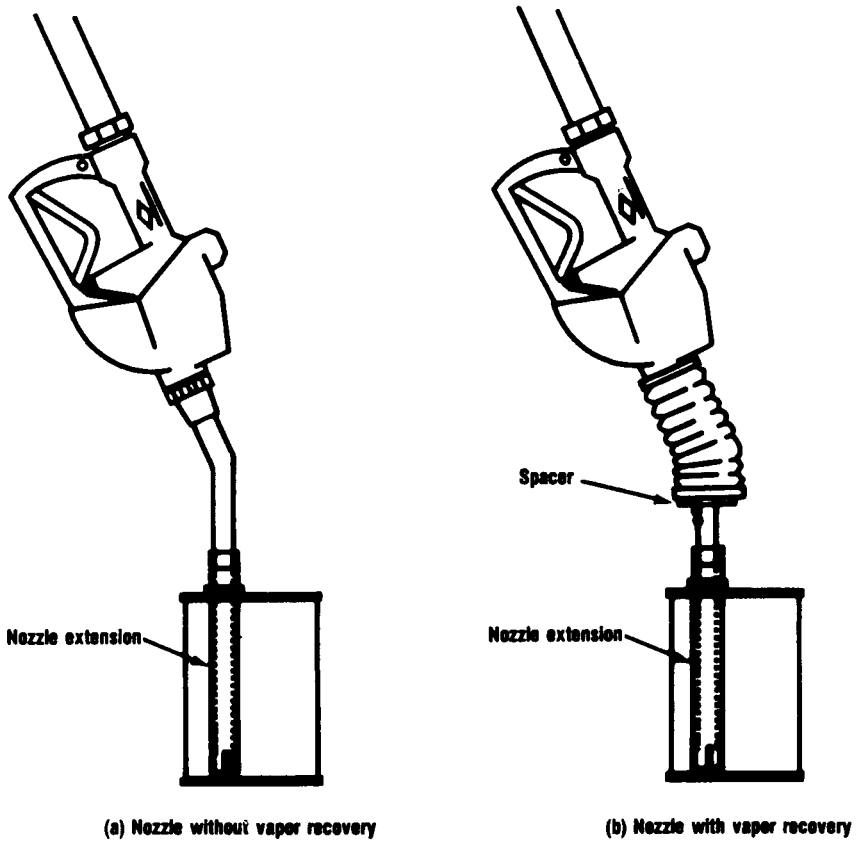

Figure 8. Assembly for Nozzle Sampling

[54 FR 11886, Mar. 22, 1989; 54 FR 27017, June 27, 1989, as amended at 55 FR 25835, June 25, 1990; 58 FR 14485, Mar. 17, 1993; 58 FR 19152, Apr. 12, 1993]

APPENDIX E TO PART 80—TEST FOR DETERMINING REID VAPOR PRESSURE (RVP) OF GASOLINE AND GASOLINE-OXYGENATE BLENDS

METHOD 3—EVACUATED CHAMBER METHOD

1. Scope.

1.1 This method covers the determination of the absolute pressure, measured against a vacuum of a gasoline or gasoline-oxygenate blend sample saturated with air at 32–40 °F (0–4.5 °C). The absolute (measured) pressure is observed with a system volume ratio of 1 part sample and 4 parts evacuated space at 100 °F (37.8 °C).

1.2 The values stated in pounds per square inch absolute are standard.

2. Summary of method.

2.1 A known volume of air-saturated fuel at 32–40 °F is introduced into an evacuated, thermostatically controlled test chamber, the internal volume of which is or becomes five times that of the total test specimen introduced into the test chamber. After the injection the test specimen is allowed to reach thermal equilibrium at the test temperature, 100 °F (37.8 °C). The resulting pressure increase is measured with an absolute pressure measuring device whose volume is included in the total of the test chamber volume. The

measured pressure is the sum of the partial pressures of the sample and the dissolved air.

2.2 The total measured pressure is converted to Reid vapor pressure by use of a correlation equation (see Section 9).

3. Apparatus.

3.1 The apparatus shall employ a thermostatically controlled test chamber which is capable of maintaining a vapor-to-liquid ratio between 3.95 and 4.05 to 1.00.

3.2 The pressure measurement device shall have a minimum operation range from 0 to 15 psia (0 to 103 kPa) with a minimum resolution of 0.05 psia (0.34 kPa). The pressure measurement device shall include any necessary electronic and readout devices to display the resulting reading.

3.3 The test chamber shall be maintained at 100±0.2°F (37.8±0.1°C) for the duration of the test except for the time period after sample injection when the sample is coming to equilibrium with test temperature of 100±0.2°F (37.8±0.1°C).

3.4 A thermometer that meets the specification ASTM 18 F (18 C) or a platinum resistance thermometer shall be used for measuring the temperature of the test chamber. The minimum resolution for the temperature measurement device is 0.2°F (0.1°C) and an accuracy of ±0.2°F (±0.1°C).

3.5 The vapor pressure apparatus shall have a provision for the introduction of the test specimen into the evacuated or to be evacuated test chamber and for the cleaning or purging of the chamber following the test.

3.6 If a vacuum pump is used, it must be capable of reducing the pressure in the test chamber to less than 0.01 psia (0.07 kPa). If the apparatus uses a piston to induce a vacuum in the sample chamber the residual pressure shall be no greater than 0.01 psia (0.07 kPa) upon full expansion of the test chamber devoid of any material at 100±0.2°F (37.8±0.1°C).

3.7 Ice water or air bath for chilling the sample to a temperature between 32–40°F (0–4.5°C).

3.8 Mercury barometer, 0 to 17.4 psia (0 to 120 kPa) range.

3.9 McLeod vacuum gauge, to cover at least the range of 0 to 5 mm Hg (0 to 0.67 kPa). Calibration of the McLeod gauge is checked as in accordance with Annex A6 of ASTM test Method D 2892–84, (Standard test method for distillation of Crude Petroleum (15–Theoretical Plate Column)). ASTM D–2892–84 is incorporated by reference. This incorporation by reference was approved by the Director of the Federal Register in accordance with 5 U.S.C 552(a) and 1 CFR part 51. Copies may be obtained from the American Society for Testing and Materials, 1916 Race St., Philadelphia, PA 19103. Copies may be inspected at the U.S. Environmental Protection Agency, Air Docket Section, room M–1500, 401 M St., SW., Washington, DC 20460 or at the Office of the Federal Register, 800 North Capitol Street, NW., Washington, DC.

4. Reagents and materials.

4.1 *Quality control standards.* Use chemicals of at least 99% purity for quality control standards. Unless otherwise indicated, it is intended that all reagents conform to the specifications of the committee on Analytical Reagents of the American Chemical Society where such specifications are available (see section 7.3). Specifications for analytical reagents may be obtained from the American Chemical Society, 1155 16th Street, NW., Washington, DC 20036.

4.1.1 2,2,4-trimethylpentane

4.1.2 2,2-dimethylbutane

4.1.3 3-methylpentane

4.1.4 n-pentane

4.1.5 acetone

4.2 n-pentane (commercial grade-95% pure)

5. Handling of samples.

5.1 The sensitivity of vapor pressure measurements to losses through evaporation and the resulting change in composition is such as to require the utmost precaution in the handling of samples. The provisions of this section apply to all samples for vapor pressure determinations.

5.2 Sample in accordance with 40 CFR part 80, appendix D.

5.3 Sample container size. The minimum size of the sample container from which the vapor pressure sample is taken is 4 ounces (118 ml). It will be 70 to 85% filled with sample.

5.4 *Precautions.*

5.4.1 Determine vapor pressure as the first test on a sample. Multiple analyses may be performed, but must be evaluated given the stated precision for the size of the sample container, and the order in which they were run in relation to the initial analysis.

5.4.2 Protect samples from excessive heat prior to testing.

5.4.3 Leaking samples should be replaced if possible. Analysis results from leaking sample containers must be marked as such.

5.4.4 Samples that have separated into two phases should be replaced if possible. Analysis results from samples that have phase separated must be marked as such.

5.4.5 Sample handling temperature. In all cases, cool the sample to a temperature of 32–40 °F (0–4.5 °C) before the container is opened. To ensure sufficient time to reach this temperature, directly measure the temperature of a similar liquid at a similar initial temperature in a like container placed in the cooling bath at the same time as the sample.

6. Preparation for test.

6.1 *Verification of sample container filling.* With the sample at a temperature of 32–40 °F (0–4.5 °C), take the container from the cooling bath, wipe dry with an absorbent material, unseal it, and examine its ullage. The sample content, as determined by use of a suitable gauge, should be equal to 70 to 85 volume % of the container capacity.

6.1.1 Analysis results from samples that contain less than 70 volume % of the container capacity must be marked as such.

6.1.2 If the container is more than 85 volume % full, pour out enough sample to bring the container contents within the 70 to 85 volume % range. Under no circumstance may any sample poured out be returned to the container.

6.2 Air saturation of the sample in the sample container. With the sample at a temperature of 32–40 °F (0–4.5 °C), take the container from the cooling bath, wipe dry with an absorbent material, unseal it momentarily, taking care to prevent water entry, re-seal it, and shake it vigorously. Return it to the bath for a minimum of 2 minutes. Repeat the air introduction procedure twice, for a total of three air introductions to completely saturate the sample.

6.3 Prepare the instrument for operation in accordance with the manufacturer's instructions.

6.3.1 *Instruments with vacuum pumps.* Clean and dry the test chamber as required to obtain a sealed test chamber pressure of less than 0.01 psi (0.07 kPa) for 1 minute. If the pressure exceeds this value check for and resolve in the following order; residual sample or cleaning solvent, sample chamber leaks, and transducer calibration.

6.3.2 *Instruments without vacuum pumps.* The sample purges the sample chamber through a series of rinses before the analysis occurs. Errors due to leaks in the plunger, piston seals, or carryover from previous samples or standards may give erratic results (see Note of section 6.3.2). The operator must run a quality control standard for at least one in twenty analyses or once a day to determine if there is carryover from previous analyses or if leaks are occurring.

NOTE: When using a self cleaning apparatus some residual product may be carried over into subsequent analyses. Carryover effect should be investigated when conducting sequential analyses of dissimilar materials, especially calibration standards. Inaccuracies caused by carryover effect should be resolved using testing procedures designed to minimize such interferences.

6.4 If a syringe is used for the physical introduction of the sample specimen, it must be either clean and dry before it is used or it may be rinsed out at least three times with the sample. When cleaning the syringe, the rinse may not be returned to the sample container. The syringe must be capable of obtaining, upon filling with the sample charge, a quantity of sample that has an entrained gas volume of less than 3% of the necessary sample volume.

7. Calibration.

7.1 *Pressure measurement device.*

7.1.1 Check the calibration of the pressure measurement device daily or until the stability of the device is documented as having less than or equal to 0.03 psi (0.2 kPa) drift per unit of the appropriate calibration period. When calibration is necessary, follow the procedures in sections 7.1.2 through 7.1.4.

7.1.2 Connect a properly calibrated McLeod gauge to the vacuum source line to the test chamber. Apply vacuum to the test chamber. When the McLeod gauge registers a pressure less than 0.8 mm Hg (0.1 kPa) adjust the pressure measurement device's zero control to match to within ±0.01 psi (0.07 kPa) of the McLeod Gauge.

7.1.3 Open the test chamber to the atmosphere and observe the pressure measurement device's reading. Adjust the pressure measurement devices span control to within ±0.01 psi (0.07 kPa) of a temperature and latitude adjusted mercury barometer.

7.1.4 Repeat steps 7.1.2 and 7.1.3 until the instrument zero and barometer readings read correctly without further adjustments.

7.2 *Thermometer.* Check the calibration of the ASTM 18 F (18 C) thermometer or the platinum resistance thermometer used to monitor the test chamber at least every six months in accordance ASTM E1–86, (Standard Specification for ASTM Thermometers). ASTM E1–86 is incorporated by reference. This incorporation by reference was approved by the Director of the Federal Register in accordance with 5 U.S.C. 552(a) and 1 CFR part 51. Copies may be obtained from the American Society for Testing and Materials, 1916 Race St., Philadelphia, PA 19103. Copies may be inspected at the U.S. Environmental Protection Agency, Air Docket Section, room M–1500, 401 M St., SW., Washington, DC 20460 or at the Office of the Federal Register, 800 North Capitol Street, NW., Washington, DC. Check the reading of the thermometer against a National Institute of Standards and Technology traceable thermometer.

7.3 *Quality assurance.* The instrument's performance must be checked at least once per day using a quality control standard listed in section 4.1. In the case of the non-vacuum pump instruments the frequency is stated in section 6.3.2. The standards must be chilled to the same temperature, have the same ullage, and saturated with air in the same manner as the samples. Record total measured pressure and compare against the following reference values:

Compound	Lower control limit	Upper control limit
2,2,4-trimethylpentane	2.39 psia (16.5 kpa)	3.03 psi (20.9 kpa)
3-methylpentane	6.86 psia (47.3 kpa)	7.26 psi (50.1 kpa)
acetone	7.97 psia (55.0 kpa)	8.12 psi (56.0 kpa)
2,2-dimethylbutane	10.64 psia (73.4 kpa)	10.93 psi (75.4 kpa)
n-pentane	16.20 psia (111.7 kpa)	16.40 psi (113.1 kpa)

If the observed pressure does not fall between the reference values, check the instrument for leaks and its calibration (Section 7).

7.3.1 Other compounds, gasolines, and gasoline blends may be used as control standards as long as these materials have been statistically evaluated for their mean total measured pressure using an instrument that conforms to this procedure.

7.3.2 The control limits can be calculated with the following formula:

MEAN MEASURED PRESSURE

$$\bar{x} = \frac{\sum x_i}{n}$$

Standard Deviation

$$s_{x_i} = \frac{\sum x_i^2 - (\sum x_i)^2/n}{(n-1)\,]^{0.5}}$$

Upper Control Limit (UCL)

$$UCL = \bar{X} + (t_{n-1,0.975}) * (S_x)$$

Lower Control Limit (LCL)

$$LCL = \bar{X} - (t_{n-1,0.975}) * (S_x)$$

where:

x_i is the individual analyses of the control standard, n is the number of analyses (for a new instrument or a new control standard this should be at least ten analyses); $(t_{n-1,0.975})$ is the two-tailed student t statistic for n-1 degrees of freedom for 95% of the expected data from the analysis of the standard.

8. Procedure.

8.1 Remove the sample from the cooling bath or refrigerator, dry the exterior of the container with absorbent material, unseal, and insert the transfer tube, syringe, or transfer connection (see section 6). Draw an aliquot (minimize gas bubbles) of sample into a gas tight syringe or transfer the sample using tubing or transfer connection and deliver this test specimen to the test chamber as rapidly as possible. The total time between opening the chilled sample container and inserting/securing the syringe or transfer connection into the sealed test chamber shall not exceed one minute.

8.2 Follow the manufacturer's instructions for injection of the test specimen into the test chamber, and for the operation of the instrument to obtain a total measured vapor pressure result for the test specimen.

8.3 Set the instrument to read the test results in terms of total measured pressure. If the instrument is capable of calculating a Reid Vapor Pressure equivalent value ensure that only the parameters in section 9.2 are used.

9. Calculation and record of result.

9.1 Note the total measured vapor pressure reading for the instrument to the nearest 0.01 psi (0.07 kPa). For instruments which do not automatically display a stable pressure value, manually note the pressure indicator reading every minute to the nearest 0.01 psi (0.07 kPa). When three successive readings agree to within 0.01 psia (0.07 kPa) note the final result to the nearest 0.01 psia (0.07 kPa).

9.2 Using the following correlation equation, calculate the Reid Vapor Pressure (RVP) that is equivalent to the total measured vapor pressure obtained from the instrument, in order to compare the vapor pressure standards set out in 40 CFR 80.27. Ensure that the instrument reading in this equation corresponds to the total measured pressure and has not been corrected by an automatically programmed correction factor.

$$RVP\ psi = (0.956 * X) - 0.347$$

$$RVP\ kPa = (0.956 * X) - 2.39$$

where:

X = total measured vapor pressure in psi or kPa

9.3 Record the RVP to the nearest 0.01 psi (0.07 kPa) as the official test result.

9.4 EPA will use the above method as the official vapor pressure test method. EPA will recognize correlations from regulated parties if the correlations are established directly with EPA's test laboratory. Any test method may be used for defense as long as adequate correlation is demonstrated to this method (i.e., any vapor pressure defense test method could be used if adequate correlation exists directly to this method, which can then be converted to Reid Vapor Pressure by use of

the EPA Grabner correlation equation in section 9.2 of this method).

[58 FR 14488, Mar. 17, 1993]

APPENDIX F TO PART 80—TEST FOR DETERMINING THE QUANTITY OF ALCOHOL IN GASOLINE

METHOD 1—WATER EXTRACTION METHOD

1. Scope.

This test method covers the determination of the type and amount of alcohols in gasoline.

2. Summary of method.

Gasoline samples are extracted with water prior to analysis on a gas chromatograph (GC). The extraction eliminates hydrocarbon interference during chromatography. A known quantity of isopropanol is added to the fuel prior to extraction to act as an internal standard.

3. Sample description.

3.1 Sample in accordance with 40 CFR part 80, appendix D.
3.2 At least 100 ml. of gasoline suspected of containing ethanol and/or methanol are required.

4. Apparatus.

4.1 Gas chromatograph—A gas chromatograph equipped with a flame ionization detector.
4.2 Column—A gas chromatograph column, glass, 1800 by 6.35 cm. outside diameter, packed with chromosorb 102.
4.3 Recorder—A 1-mv recorder with a 1 second full scale response and a chart speed of 10 mm. per minute (0.4 inches per minute).
4.4 Syringe (100 ul.) for adding the internal standard.
4.5 Pipet.
4.6 Injection syringe (10 ul.).
4.7 Extraction syringe (1–5 ml.) with 3-inch needle.
4.8 250 ml. (½ pint) glass sample bottles with screw caps or equivalent.
4.9 Calibration standard solutions extracted from gasoline containing known quantities of alcohols.
4.10 Reference standard solutions extracted from gasoline containing known quantities of alcohols.
4.11 Distilled water.
4.12 Reagent grade isopropanol.
4.13 Rubber gloves.
4.14 I.D. tags.

5. Precautions.

NOTE 1: Gasoline and alcohols are extremely flammable and may be toxic over prolonged exposure. Methanol is particularly hazardous. Persons performing this procedure must be familiar with the chemicals involved and all precautions applicable to each.

5.1 Extractions and dilutions must be performed in well-ventilated areas, preferably under a fume hood, away from open flames and sparks.
5.2 Rubber gloves must be worn during the handling of gasoline and alcohols.
5.3 Avoid breathing fumes from gasoline and alcohols, particularly methanol.
5.4 Gas cylinders must be properly secured and the hydrogen FID fuel must be segregated from the compressed air (oxidizer) tank.

6. Visual inspection.

6.1 Ensure that the samples do not certain sediment or separated phases prior to extraction.
6.2 Ensure adequate quantities of GC supply gases to maintain a run.

7. Test article preparation.

7.1 Gas chromatography—Use carrier gas, flow rates, detector and injection temperatures and column as specified in the GC manufacturer's specifications.
7.2 Sample extraction, preparation and analysis.
7.2.1 Label two 6 ml. vials with the sample identification number supplied with the original sample. The estimated percent alcohol from any screening tests must also be included on the label.
7.2.2 Pipet 4 ml.±0.01 ml. of sample into one of the vials. Label as vial #1.
7.2.3 Measure 100 ul. (0.1 ml.)±0.5 ul. of isopropanol into vial #1.

NOTE: This adds an internal standard to the sample which is required for accurate analysis.

7.2.4 Add 1 ml.±0.2 ml. of distilled water to the gasoline sample in vial #1 and shake for 10 seconds.
7.2.5 Allow the mixture to separate into two phases (at least 5 minutes).
7.2.6 Carefully draw off the aqueous (lower) phase using a 5 ml. syringe and long needle.

NOTE: Be careful not to allow any of the gasoline phase to get into the needle. Leave a small amount (approximately 0.2 ml.) of the aqueous phase in the vial.

7.2.7 Transfer the aqueous phase into the other 6 ml. vial (vial #2).
7.2.8 Repeat steps 7.2.4 to 7.2.6 two more times.
7.2.9 Fill vial #2 (the aqueous phase) to 4 ml.±0.05 ml. with distilled water.
7.2.10 Retain the remaining original gasoline sample (not the gasoline phase).
7.2.11 Discard the extracted gasoline phase in vial #1 in an appropriate manner.

7.2.12 Perform a second extraction on one sample in every 20. This sample is to be labeled with the sample number and as a duplicate and run as a normal sample.

7.2.13 Transfer approximately 2 ml. of the aqueous solution to vials compatible with the autosampler. Tag the vial with the sample number.

7.2.14 Perform analysis of the sample according to the GC manufacturer's specifications.

7.3 Standards.

7.3.1 Calibration standard solutions (made in gasoline).

7.3.1.1 Reagent grade or better alcohols (including undenatured ethanol) are to be diluted with regular unleaded gasoline. The isopropanol internal standard is to be added during extraction of the alcohols. Newly acquired stocks of reagent grade alcohols shall be diluted to 10% with hydrocarbon-free water and analyzed for contamination by GC before use.

7.3.1.2 Required calibration standards (% by volume in gasoline):

Alcohol	Range (percent)	Standard (MIN)
Methanol	0.5–12	5
Ethanol	0.5–11	5

The standards should be as equally spaced within the range as possible and may contain more than one alcohol.

NOTE: Level #1 must contain all of the alcohols.

8. Quality control provisions.

8.1 Alcohol(s) in water solution may be used to characterize the GC. The resulting characterization always reflects the absolute sensitivity of the instrument to each alcohol.

8.2 Calibration standards are made by extraction of known alcohol(s) in gasoline blends. These standards account for inaccuracies caused by incomplete extraction of alcohols.

8.3 The addition of isopropanol as an internal standard reduces errors caused by variations in injection volumes, and further reduces inaccuracies caused by incomplete extraction of alcohols.

8.4 Sufficient sample should be retained to permit reanalysis.

8.5 Running averages of reference standards data must not exceed 0.75% of applicable limits or investigation should be started for the cause of such variation.

9. Calculations.

9.1 Calculate purity of component as follows:

$$P_i = \frac{A_i}{\Sigma_A} \text{ expressed as a decimal fraction, that is 0.999}$$

where:

P_i = purity of component i,
A_i = area of response of component i, and
$\Sigma\mathbf{A}$ = total area response of all components.

9.2 Calculate response factors as follows:

$$F_i = \frac{A_{is} \times W_i \times P_i}{A_i \times W_{is} \times P_{is}}$$

where:

F_i = response factor for component of interest i,
A_i = area response for component of interest i,
A_{is} = area response of internal standard,
W_i = weight of component of interest i (be sure to consider all sources),
W_{is} = weight of internal standard,
P_i = purity of component of interest i as determined in 9.1 expressed as a decimal, and
P_{is} = purity of internal standards as determined in 9.1 expressed as a decimal.

9.3 Calculate the percent alcohols as follows:

$$C_i = \frac{W_{is} \times A_i \times F_i}{W_i \times A_{is}} \times 100 = \text{weight \% component i}$$

where:

A_i = peak area component i,
A_{is} = peak area of internal standard,
W_i = weight of sample,
W_{is} = weight of internal standard, and
F_i = response factor for component i.

10. REPORT.

10.1 Report results to the nearest 0.1%.

11. PRECISION AND ACCURACY.

11.1 Precision—The precision of this test method has not been determined.

11.2 Accuracy—The accuracy of this test method has not been determined.

METHOD 2—TEST METHOD FOR DETERMINATION OF C_1 TO C_4 ALCOHOLS AND MTBE IN GASOLINE BY GAS CHROMATOGRAPHY

1. Scope.

1.1 This test method covers a procedure for determination of methanol, ethanol, isopropanol, n-propanol, isobutanol, sec-butanol, tert-butanol, n-butanol, and methyl tertiary butyl ether (MTBE) in gasoline by gas chromatography.

1.2 Individual alcohols and MTBE are determined from 0.1 to 10 volume %. Any sample found to contain greater than 10 volume % of an alcohol or MTBE shall be diluted to concentrations within these limits.

1.3 Sl (metric) units of measurement are preferred and used throughout this standard. Alternative units, in common usage, are also provided to improve the clarity and aid the user of this test method.

1.4 This standard may involve hazardous materials, operations, and equipment. This standard does not purport to address all of the safety problems associated with its use. It is the responsibility of the user of this standard to establish appropriate safety and health practices and determine the applicability of regulatory limitations prior to use.

2. *Referenced documents.*

2.1 ASTM Standards:

D 4307 Practice for Preparation of Liquid Blends for Use as Analytical Standards[1]

D 4626 Practice for Calculation of Gas Chromatographic Response Factors[1]

E 260 Practice for Packed Column Gas Chromatographic Procedures[2]

E 355 Practice for Gas Chromatography Terms and Relationships[2]

2.2 EPA Regulations:

40 CFR Part 80 Appendix D

3. Descriptions of terms specific to this standard.

3.1 MTBE—methyl tertiary butyl ether.

3.2 Low volume connector—a special union for connecting two lengths of tubing 1.6 mm inside diameter and smaller. Sometimes this is referred to as a zero dead volume union.

3.3 Oxygenates—used to designate fuel blending components containing oxygen, either in the form of alcohol or ether.

3.4 Split ratio—a term used in gas chromatography using capillary columns. The split ratio is the ratio of the total flow of the carrier gas to the sample inlet versus the flow of carrier gas to the capillary column. Typical values range from 10:1 to 500:1 depending upon the amount of sample injected and the type of capillary column used.

3.5 WCOT—abbreviation for a type of capillary column used in gas chromatography that is wall-coated open tubular. This type of column is prepared by coating the inside of the capillary with a thin film of stationary phase.

3.6 TCEP—1,2,3,-tris-2-cyanoethoxypropane—a gas chromatographic liquid phase.

4. Summary of test method.

4.1 An internal standard, tertiary amyl alcohol, is added to the sample which is then introduced into a gas chromatograph equipped with two columns and a column switching valve. The sample first passes onto a polar TCEP column which elutes lighter hydrocarbons to vent and retains the oxygenated and heavier hydrocarbons. After methylcyclopentane, but before MTBE elutes from the polar column, the valve is switched to backflush the oxygenates onto a WCOT non-polar column. The alcohols and MTBE elute from the non-polar column in boiling point order, before elution of any major hydrocarbon constituents. After benzene elutes from the non-polar column, the column switching valve is switched back to its original position to backflush the heavy hydrocarbons. The eluted components are detected by a flame ionization or thermal conductivity detector. The detector response, proportional to the component concentration, is recorded; the peak areas are measured; and the concentration of each component is calculated with reference to the internal standard.

5. Significance and use.

5.1 Alcohols and other oxygenates may be added to gasoline to increase the octane number. Type and concentration of various oxygenates are specified and regulated to ensure acceptable commercial gasoline quality. Drivability, vapor pressure, phase separation, and evaporative emissions are some of the concerns associated with oxygenated fuels.

5.2 This test method is applicable to both quality control in the production of gasoline and for the determination of deliberate or extraneous oxygenate additions or contamination.

6. Apparatus.

6.1 Chromatograph:

6.1.1 A gas chromatographic instrument which can be operated at the conditions given in Table 1, and having a column switching and backflushing system equivalent to Fig. 1. Carrier gas flow controllers shall be capable of precise control where the required flow rates are low (Table 1). Pressure control devices and gages shall be capable of precise control for the typical pressures required.

[1] Annual Book of ASTM Standards, Vol. 05.03.

[2] Annual Book of ASTM Standards, Vol. 14.01.

TABLE 1—CHROMATOGRAPHIC OPERATING CONDITIONS

Temperatures		Flows, mL/min		Other parameters: Carrier gas, helium	
Column oven, °C	60	To injector	75	Sample size, µL	3
Injector, °C	200	Column	5	Split ratio	15:1
Detector—TCD, °C	200	Auxiliary	3	Backflush, min	0.2–0.3
FID, °C	250	Makeup	18	Valve reset time, min	8–10
Valve, °C	60			Total analysis time, min	18–20

6.1.2 Detector—A thermal conductivity detector or flame ionization detector may be used. The system shall have sufficient sensitivity and stability to obtain a recorded deflection of at least 2 mm at a signal-to-noise ratio of at least 5 to 1 for 0.005 volume % concentration of an oxygenate.

6.1.3 Switching and backflushing valve—A valve, to be located within the gas chromatographic column oven, capable of performing the functions described in Section 11. and illustrated in Fig. 1. The valve shall be of low volume design and not contribute significantly to chromatographic deterioration.

6.1.3.1 Valco Model No. CM–VSV–10–HT, 1.6-mm (1/16-in.) fittings. This particular valve was used in the majority of the analyses used for the development of Section 15.

6.1.3.2 Valco Model No. C10W, 0.8-mm (1/32-in.) fittings. This valve is recommended for use with columns of 0.32-mm inside diameter and smaller.

6.1.4 Although not mandatory, an automatic valve switching device is strongly recommended to ensure repeatable switching times. Such a device should be synchronized with injection and data collection times. If no such device is available, a stopwatch, started at the time of injection, should be used to indicate the proper valve switching time.

6.1.5 Injection system—The chromatograph should be equipped with a splitting-type inlet device. Split injection is necessary to maintain the actual chromatographed sample size within the limits of column and detector optimum efficiency and linearity.

6.1.6 Sample introduction—Any system capable of introducing a representative sample into the split inlet device. Microlitre syringes, automatic syringe injectors, and liquid sampling valves have been used successfully.

6.2 Data presentation or calculation, or both:

6.2.1 Recorder—A recording potentiometer or equivalent with a full-scale deflection of 5 mV or less. Full-scale response time should be 1 s or less with sufficient sensitivity and stability to meet the requirements of 6.1.2.

6.2.2 Integrator or computer—Devices capable of meeting the requirements of 6.1.2, and providing graphic and digital presentation of the chromatographic data, are recommended for use. Means shall be provided for determining the detector response. Peak heights or areas can be measured by computer, electronic integration or manual techniques.

6.3 Columns, two as follows:

6.3.1 Polar column—This column performs a preseparation of the oxygenates from volatile hydrocarbons in the same boiling point range. The oxygenates and remaining hydrocarbons are backflushed onto the non-polar column in section 6.3.2. Any column with equivalent or better chromatographic efficiency and selectivity to that described in 6.3.1.1 can be used. The column shall perform at the same temperature as required for the column in 6.3.2.

6.3.1.1 TCEP micro-packed column, 560 mm (22 in.) by 1.6-mm (1/16-in.) outside diameter by 0.38-mm (0.015-in.) inside diameter stainless steel tube packed with 0.14 to 0.15g of 20% (mass/mass) TCEP on 80/100 mesh Chromosorb P(AW). This column was used in the (ASTM) cooperative study to provide the Precision and Bias data referred to in Section 15.

6.3.2 Non-polar (analytical) column—Any column with equivalent or better chromatographic efficiency and selectivity to that described in 6.3.2.1 and illustrated in Fig. 2 can be used.

6.3.2.1 WCOT methyl silicone column, 30m (1181 in.) long by 0.53 mm (0.021-in.) inside diameter fused silica WCOT column with a 2.6-µm film thickness of cross-linked methyl siloxane. This column was used in the (ASTM) cooperative study to provide the Precision and Bias data referred to in Section 15.

7. Reagents and materials.

7.1 Carrier gas—Carrier gas appropriate to the type of detector used. Helium has been used successfully. The minimum purity of the carrier gas used must be 99.95 mol %.

7.2 Standards for calibration and identification—Standards of all components to be analyzed and the internal standard are required for establishing identification by retention as well as calibration for quantitative measurements. These materials shall be of known purity and free of the other components to be analyzed.

NOTE 1. Warning—These materials are flammable and may be harmful or fatal if ingested or inhaled.

7.3 Preparation of calibration blends—For best results, these components must be added to a stock gasoline or petroleum naphtha, free of oxygenates (Warning—See Note 2). Refer to Test Method D 4307 for preparation of liquid blends. The preparation of several different blends, at different concentration levels covering the scope of the method, is recommended. These will be used to establish the linearity of the component response.

NOTE 2. Warning—Extremely flammable. Vapors harmful if inhaled.

7.4 Methylene chloride—Used for column preparation. Reagent grade, free of non-volatile residue.

NOTE 3. Warning—Harmful if inhaled. High concentrations may cause unconsciousness or death.

8. Preparation of column packings.

8.1 TCEP column packing:

8.1.1 Any satisfactory method, used in the practice of the art that will produce a column capable of retaining the C_1 to C_4 alcohols and MTBE from components of the same boiling point range in a gasoline sample. The following procedure has been used successfully.

8.1.2 Completely dissolve 10 g of TCEP in 100 mL of methylene chloride. Next add 40 g of 80/100 mesh Chromosorb P(AW) to the TCEP solution. Quickly transfer this mixture to a drying dish, in a fume hood, without scraping any of the residual packing from the sides of the container. Constantly, but gently, stir the packing until all of the solvent has evaporated. This column packing can be used immediately to prepare the TCEP column.

9. Preparation of micro-packed TCEP column.

9.1 Wash a straight 560 mm length of 1.6–mm outside diameter (0.38–mm inside diameter) stainless steel tubing with methanol and dry with compressed nitrogen.

9.2 Insert 6 to 12 strands of silvered wire, a small mesh screen or stainless steel frit inside one end of the tube. Slowly add 0.14 to 0.15 g of packing material to the column and gently vibrate to settle the packing inside the column. When strands of wire are used to retain the packing material inside the column, leave 6.0 mm (0.25 in.) of space at the top of the column.

9.3 Column conditioning—Both the TCEP and WCOT columns are to be briefly conditioned before use. Connect the columns to the valve (see 11.1) in the chromatographic oven. Adjust the carrier gas flows as in 11.3 and place the valve in the RESET position. After several minutes, increase the column oven temperature to 120 °C and maintain these conditions for 5 to 10 min. Cool the columns below 60 °C before shutting off the carrier flow.

10. Sampling.

10.1 Gasoline samples to be analyzed by this test method shall be sampled in accordance with 40 CFR part 80, appendix D.

11. Preparation of apparatus and establishment of conditions.

11.1 Assembly—Connect the WCOT column to the valve system using low volume connectors and narrow bore tubing. It is important to minimize the volume of the chromatographic system that comes in contact with the sample, otherwise peak broadening will occur.

11.2 Adjust the operating conditions to those listed in Table 1, but do not turn on the detector circuits. Check the system for leaks before proceeding further.

11.3 Flow rate adjustment.

11.3.1 Attach a flow measuring device to the column vent with the valve in the RESET position and adjust the pressure to the injection port to give 5.0 mL/min flow (14 psig). Soap bubble flow meters are suitable.

11.3.2 Attach a flow measuring device to the split injector vent and adjust flow from the split vent using the A flow controller to give a flow of 70 mL/min. Recheck the column vent flow set in 11.3.1 and adjust if necessary.

11.3.3 Switch the valve to the BACKFLUSH position and adjust the variable restrictor to give the same column vent flow set in 11.3.1. This is necessary to minimize flow changes when the valve is switched.

11.3.4 Switch the valve to the inject position RESET and adjust the B flow controller to give a flow of 3.0 to 3.2 mL/min at the detector exit. When required for the particular instrumentation used, add makeup flow or TCD switching flow to give a total of 21 mL/min at the detector exit.

11.4 When a thermal conductivity detector is used, turn on the filament current and allow the detector to equilibrate. When a flame ionization detector is used, set the hydrogen and air flows and ignite the flame.

11.5 Determine the Time of Backflush—The time to backflush will vary slightly for each column system and must be determined experimentally as follows. The start time of the integrator and valve timer must be synchronized with the injection to accurately reproduce the backflush time.

11.5.1 Initially assume a valve BACKFLUSH time of 0.23 min. With the valve RESET, inject 3 μL of a blend containing at least 0.5% or greater oxygenates (7.3), and simultaneously begin timing the analysis. At 0.23 min., rotate the valve to the BACKFLUSH position and leave it there until the complete elution of benzene is realized. Note this time as the RESET time, which is the time at which the valve is returned to the RESET position. When all of the remaining hydrocarbons are backflushed

the signal will return to a stable baseline and the system is ready for another analysis. The chromatogram should appear similar to that illustrated in Fig. 2.

11.5.2 It is necessary to optimize the valve BACKFLUSH time by analyzing a standard blend containing oxygenates. The correct BACKFLUSH time is determined experimentally by using valve switching times between 0.2 and 0.3 min. When the valve is switched too soon, C_5 and lighter hydrocarbons are backflushed and are co-eluted in the C_4 alcohol section of the chromatogram. When the valve BACKFLUSH is switched too late, part or all of the MTBE component is vented resulting in an incorrect MTBE measurement. Chromatograms resulting from incorrect valve times are shown in Figs. 3 and 4.

12. Calibration and standardization.

12.1 Identification—Determine the retention time of each component by injecting small amounts either separately or in known mixtures or by comparing the relative retention times with those in Table 2.

12.2 Standardization—The area under each peak in the chromatogram is considered a quantitative measure of the corresponding compound. Measure the peak area of each oxygenate and of the internal standard by either manual methods or electronic integrator. Calculate the relative volume response factor of each oxygenate, relative to the internal standard, according to Test Method D 4626.

TABLE 2—RETENTION CHARACTERISTICS FOR TCEP/WCOT COLUMN SET CONDITIONS AS IN TABLE 1

Component	Retention time, min	Relative retention time (t-amyl alcohol = 1.00)
Methanol	3.21	0.44
Ethanol	3.58	0.50
Isopropanol	3.95	0.56
tert-Butanol	4.31	0.61
n-Propanol	4.75	0.68
MTBE	5.29	0.76
sec-Butanol	5.63	0.82
Isobutanol	6.33	0.93
n-Butanol	7.55	1.10
Benzene	7.88	1.17

13. Procedure.

13.1 Preparation of sample—Precisely add a quantity of the internal standard to an accurately measured quantity of sample. Concentrations of 1 to 5 volume percent have been used successfully.

13.2 Chromatographic analysis—Introduce a representative aliquot of the sample, containing internal standard, into the chromatograph using the same technique as used for the calibration analyses. An injection volume of 3 μL with a 15:1 split ratio has been used successfully.

13.3 Interpretation of chromatogram—Compare the results of sample analyses to those of calibration analyses to determine identification of oxygenates present.

14. Calculation.

14.1 After identifying the various oxygenates, measure the area of each oxygenate peak and that of the internal standard. Calculate the volume percent of each oxygenate as follows:

$$V_j = \frac{V_S \times PA_j \times 100}{PA_S \times S_j \times V_G}$$

where:

V_j = volume percent of oxygenate to be determined,

V_S = volume of internal standard (tert-amyl alcohol) added,

V_G = volume of gasoline sample taken,

PA_j = peak area of the oxygenate to be determined,

PA_S = peak area of the internal standard (tert-amyl alcohol), and

S_j = relative volume response factor of each component (relative to the internal standard).

14.2 Report the volume of each oxygenate. If the volume percent exceeds 10%, dilute the sample to a concentration lower than 10% and repeat the procedures in sections 13 and 14.

15. Precision and bias.

15.1 Precision—The precision of this test method as determined by statistical examination of the interlaboratory test results is as follows:

15.1.1 Repeatability—The difference between successive results obtained by the same operator with the same apparatus under constant operating conditions on identical test materials would, in the long run, in the normal and correct operation of the test method exceed the following values only in one case in twenty (see Table 3).

Methanol 0.086 × (V+0.070).

Ethanol 0.083 × (V+0.000).

Isopropanol 0.052 × (V+0.150).

n-Propanol 0.040 × (V+0.026).

Isobutanol 0.064 × (V+0.086)

sec-Butanol 0.014 × √ V

tert-Butanol 0.052 × (V+0.388)

n-Butanol 0.043 × (V+0.020)

MTBE 0.104 × (V+0.028)

where

V is the mean volume percent.

15.1.2 Reproducibility—The difference between two single and independent results obtained by different operators working in different laboratories on identical material would, in the long run, exceed the following values only in one case in twenty (see Table 3).

Methanol 0.361 × (V+0.070).

Ethanol 0.373 × (V+0.000).

Isopropanol 0.214 × (V+0.150).

Isobutanol 0.179 × (V+0.086)

sec-Butanol 0.277 × √ V

tert-Butanol 0.178 × (V+0.388)

n-Propanol 0.163 × (V+0.026).

n-Butanol 0.415 × (V+0.020)

MTBE 0.244×(V+0.028)

where

V is the mean volume percent.

15.2 Bias—Since there is no accepted reference material suitable for determining bias for the procedure in the test method, bias cannot be determined.

TABLE 3—PRECISION INTERVALS—DETERMINED FROM COOPERATIVE STUDY DATA SUMMARIZED IN SECTION 15

Components	Volume percent							
	0.20	0.50	1.00	2.00	3.00	4.00	5.00	6.00
	Repeatability							
Methanol	0.02	0.05	0.09	0.18	0.26	0.35	0.44	0.52
Ethanol	0.02	0.04	0.08	0.17	0.25	0.33	0.42	0.50
Isopropanol	0.02	0.03	0.06	0.11	0.16	0.22	0.27	0.32
n-Propanol	0.01	0.02	0.04	0.08	0.12	0.16	0.20	0.24
tert-Butanol	0.03	0.05	0.07	0.12	0.18	0.23	0.28	0.33
sec-Butanol	0.01	0.01	0.01	0.02	0.02	0.03	0.03	0.03
Isobutanol	0.02	0.04	0.07	0.13	0.20	0.26	0.33	0.39
n-Butanol	0.01	0.02	0.04	0.09	0.13	0.17	0.22	0.26
MTBE	0.02	0.05	0.11	0.21	0.31	0.42	0.52	0.63
	Reproducibility							
Methanol	0.10	0.21	0.39	0.75	1.11	1.47	1.83	2.19
Ethanol	0.07	0.19	0.37	0.75	1.12	1.49	1.87	2.24
Isopropanol	0.07	0.14	0.25	0.46	0.67	0.89	1.10	1.32
n-Propanol	0.04	0.09	0.17	0.33	0.49	0.66	0.82	0.98
tert-Butanol	0.10	0.16	0.25	0.43	0.60	0.78	0.96	1.14
sec-Butanol	0.12	0.20	0.28	0.39	0.48	0.55	0.62	0.68
Isobutanol	0.05	0.10	0.19	0.37	0.55	0.73	0.91	1.09
n-Butanol	0.09	0.22	0.42	0.84	1.25	1.67	2.08	2.50
MTBE	0.05	0.12	0.23	0.45	0.68	0.90	1.13	1.35

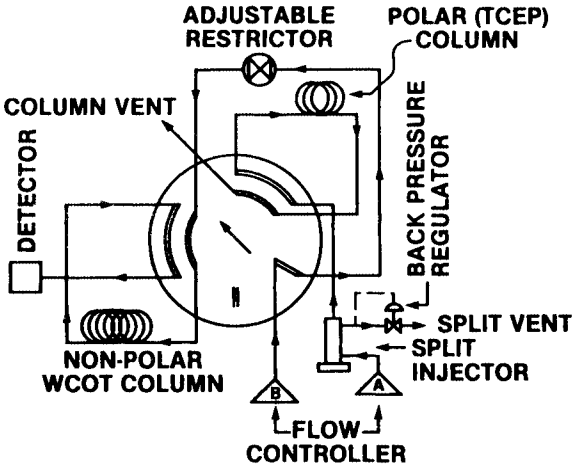

Valve in RESET Position

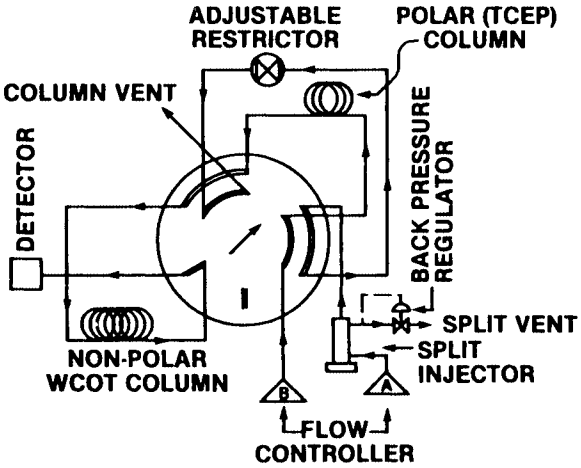

Valve in BACKFLUSH Position

FIG. 1 Analysis of Oxygenates in Gasoline Schematic of Chromatographic System

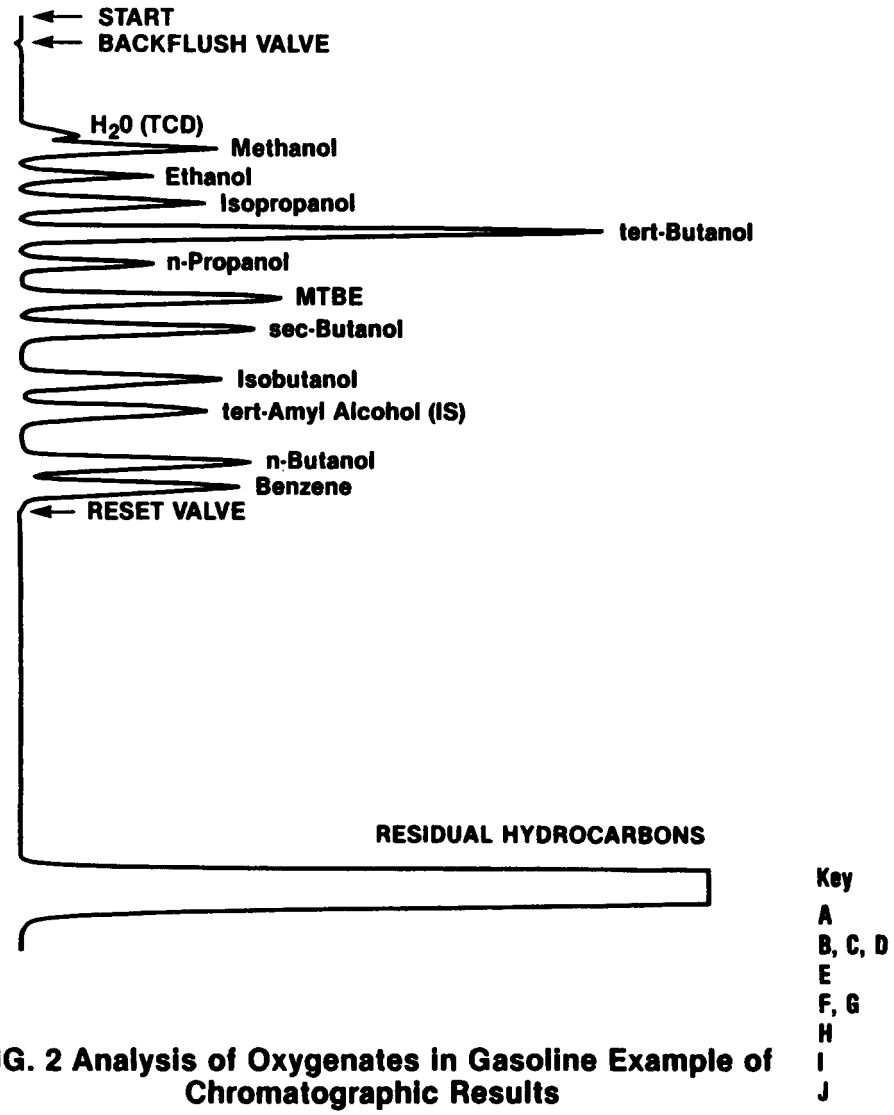

FIG. 2 Analysis of Oxygenates in Gasoline Example of Chromatographic Results

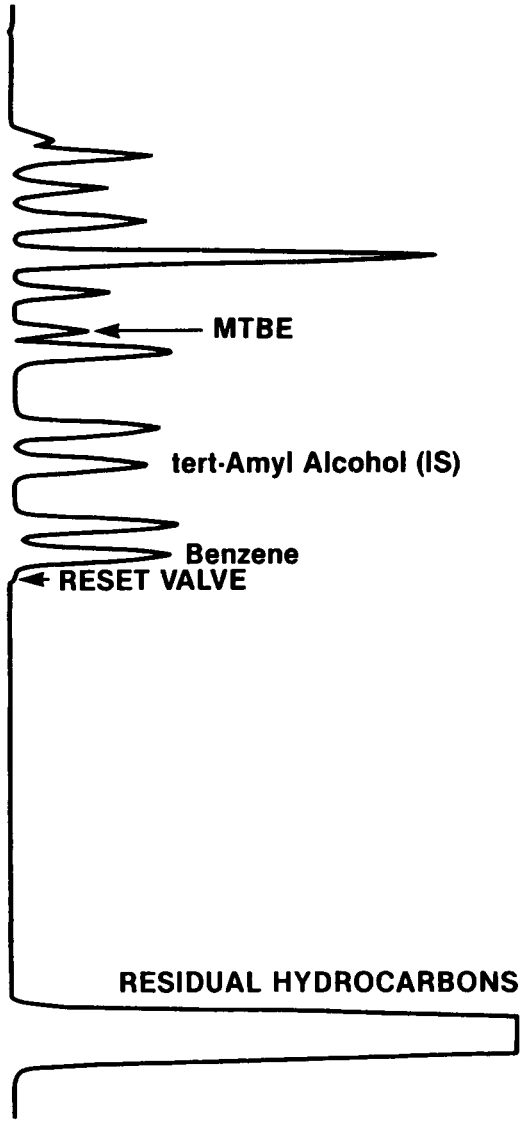

FIG. 3 Analysis of Oxygenates in Gasoline Example Chromatogram Showing Loss of MTBE Due to Venting with Light Hydrocarbons by Late Backflush Time

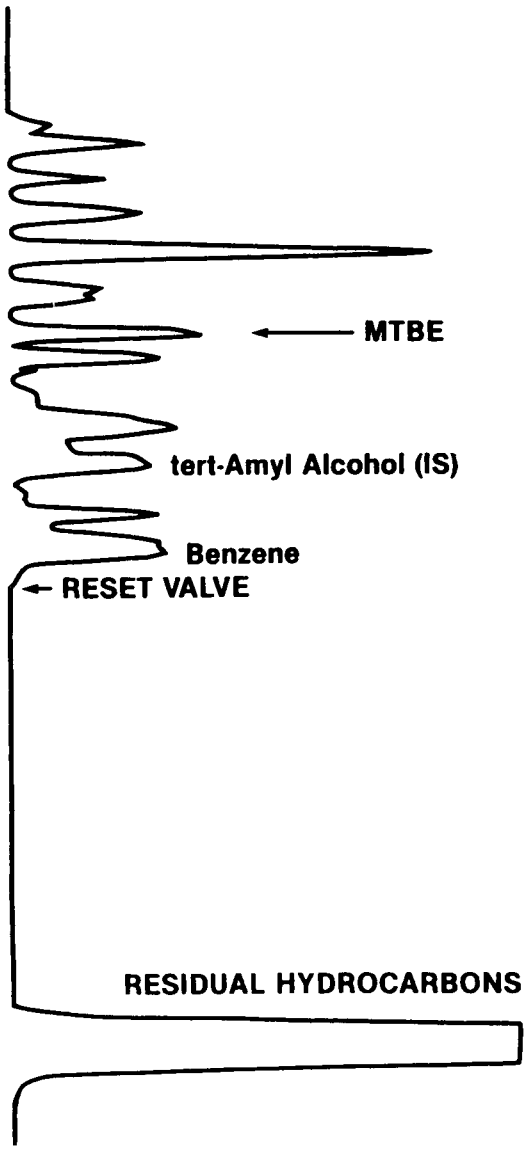

FIG. 4 Analysis of Oxygenates in Gasoline Example Chromatogram Showing Presence of Interferences Caused by Early Backflush Time

[54 FR 11903, Mar. 22, 1989]

APPENDIX G TO PART 80—SAMPLING PROCEDURES FOR DIESEL FUEL

1. Scope

1.1 This method covers procedures for obtaining representative samples of diesel fuel for the purpose of testing for compliance with the cetane index and sulfur percentage standards set forth in §80.29.

2. Summary of Method

2.1 It is necessary that the samples be truly representative of the diesel fuel in question. The precautions required to ensure the representative character of the samples are numerous and depend upon the tank, carrier, container or line from which the sample is being obtained, the type and cleanliness of the sample container, and the sampling procedures that are to be used. A summary of the sampling procedures and their application is presented in Table 1. Each procedure is suitable for sampling a material under definite storage, transportation, or container conditions. The basic principle of each procedure is to obtain a sample in such manner and from such locations in the tank or other container that the sample will be truly representative of the diesel fuel.

3. Description of Terms

3.1 *Average sample* is one that consists of proportionate parts from all sections of the container.

3.2 *All-levels sample* is one obtained by submerging a stoppered beaker or bottle to a point as near as possible to the draw-off level, then opening the sampler and raising it at a rate such that it is about ¾ full (maximum 85 percent) as it emerges from the liquid. An all-levels sample is not necessarily an average sample because the tank volume may not be proportional to the depth and because the operator may not be able to raise the sampler at the variable rate required for proportionate filling. The rate of filling is proportional to the square root of the depth of immersion.

3.3 *Running sample* is one obtained by lowering an unstoppered beaker or bottle from the top of the gasoline to the level of the bottom of the outlet connection or swing line, and returning it to the top of the top of the diesel fuel at a uniform rate of speed such that the beaker or bottle is about ¾ full when withdrawn from the diesel fuel.

3.4 *Spot sample* is one obtained at some specific location in the tank by means of a thief bottle, or beaker.

3.5 *Top sample* is a spot sample obtained 6 inches (150 mm) below the top surface of the liquid (Figure 1 of appendix D).

3.6 *Upper sample* is a spot sample taken at the mid-point of the upper third of the tank contents (Figure 1 of appendix D).

3.7 *Middle sample* is a spot sample obtained from the middle of the tank contents (Figure 1 of appendix D).

3.8 *Lower sample* is a spot sample obtained at the level of the fixed tank outlet or the swing line outlet (Figure 1 of appendix D).

3.9 *Clearance sample* is a spot sample taken 4 inches (100 mm) below the level of the tank outlet (Figure 1 of appendix D).

3.10 *Bottom sample* is a spot sample obtained from the material on the bottom surface of the tank, container, or line at its lowest point.

3.11 *Drain sample* is a tap sample obtained from the draw-off or discharge valve. Occasionally, a drain sample may be the same as a bottom sample, as in the case of a tank car.

3.12 *Continuous sample* is one obtained from a pipeline in such manner as to give a representative average of a moving stream.

3.13 *Nozzle sample* is one obtained from a diesel pump nozzle which dispenses diesel fuel from a storage tank at a retail outlet or a wholesale purchaser-consumer facility.

4. Sample Containers

4.1 Sample containers may be clear or brown glass bottles, or cans. The clear glass bottle is advantageous because it may be examined visually for cleanliness, and also allows visual inspection of the sample for free water or solid impurities. The brown glass bottle affords some protection from light. Cans with the seams soldered on the exterior surface with a flux of rosin in a suitable solvent are preferred because such a flux is easily removed with diesel fuel, whereas many others are very difficult to remove. If such cans are not available, other cans made with a welded construction that are not affected by, and that do not affect, the diesel fuel being sampled are acceptable.

4.2 Container closure. Cork or glass stoppers, or screw caps of plastic or metal may be used for glass bottles; screw caps only shall be used for cans to provide a vapor-tight closure seal. Corks must be of good quality, clean and free from holes and loose bits of cork. Never use rubber stoppers. Contact of the sample with the cork may be prevented by wrapping tin or aluminum foil around the cork before forcing it into the bottle.

Glass stoppers must be a perfect fit. Screw caps must be protected by a cork disk faced with tin or aluminum foil, or other material that will not affect petroleum or petroleum products. In addition, a phenolic cap with a teflon coated liner may be used.

4.3 Cleaning procedure. The method of cleaning all sample containers must be consistent with the residual materials in the container and must produce sample containers that are clean and free of water, dirt, lint, washing compounds, naphtha, or other

solvents, soldering fluxes or acids, corrosion, rust, and oil.

New sample containers should be inspected and cleaned if necessary. Dry the container by either passing a current of clean, warm air through the container or by allowing it to air dry in a clean area at room temperature. When dry, stopper or cap the container immediately.

5. Sampling Apparatus

5.1 Sampling apparatus is described in detail under each of the specific sampling procedures. Clean, dry, and free all sampling apparatus from any substance that might contaminate the material, using the procedure described in 4.3.

6. Time and Place of Sampling

6.1 When loading or discharging diesel fuel, take samples from both shipping and receiving tanks, and from the pipeline if required.

6.2 Ship or barge tanks. Sample each product after the vessel is loaded or just before unloading.

6.3 Tank cars. Sample the product after the car is loaded or just before unloading.

NOTE: When taking samples from tanks suspected of containing flammable atmospheres, precautions should be taken to guard against ignitions due to static electricity. Metal or conductive objects, such as gage tapes, sample containers, and thermometers, should not be lowered into or suspended in a compartment or tank which is being filled or immediately after cessation of pumping. A waiting period of approximately one minute will generally permit a substantial relaxation of the electrostatic charge; under certain conditions a longer period may be deemed advisable.

7. Obtaining Samples

7.1 Directions for sampling cannot be made explicit enough to cover all cases. Extreme care and good judgment are necessary to ensure samples that represent the general character and average condition of the material. Clean hands are important. Clean gloves may be worn but only when absolutely necessary, such as in cold weather, or when handling materials at high temperature, or for reasons of safety. Select wiping cloths so that lint is not introduced, contaminating samples.

7.2 As many petroleum vapors are toxic and flammable, avoid breathing them or igniting them from an open flame or a spark produced by static. Follow all safety precautions specific to the material being sampled.

8. Handling Samples

8.1 Container outage. Never completely fill a sample container, but allow adequate room for expansion, taking into consideration the temperature of the liquid at the time of filling and the probable maximum temperature to which the filled container may be subjected.

9. Shipping Samples

9.1 To prevent loss of liquid during shipment, and to protect against moisture and dust, cover with suitable vapor tight caps. The caps of all containers must be screwed down tightly and checked for leakage. Postal and express office regulations applying to the shipment of flammable liquids must be observed.

10. Labeling Sample Containers

10.1 Label the container immediately after a sample is obtained. Use waterproof and oilproof ink or a pencil hard enough to dent the tag, since soft pencil and ordinary ink markings are subject to obliteration from moisture, oil smearing and handling. An indelible identification symbol, such as a bar code, may be used in lieu of a manually addressed label. The label shall reference the following information:

10.1.1 Date and time (the period elapsed during continuous sampling);

10.1.2 Name of the sample;

10.1.3 Name or number and owner of the vessel, car, or container;

10.1.4 Brand and grade of material; and

10.1.5 Reference symbol or identification number.

11. Sampling procedures

11.1 The standard sampling procedures described in this method are summarized in Table 1. Alternative sampling procedures may be used if a mutually satisfactory agreement has been reached by the party(ies) involved and EPA and such agreement has been put in writing and signed by authorized officials.

TABLE 1—SUMMARY OF DIESEL FUEL SAMPLING PROCEDURES AND APPLICABILITY

Type of container	Procedure	Paragraph
Storage tanks, ship and barge tanks, tank cars, tank trucks.	Bottle sampling	11.2
Storage tanks with taps ..	Tap sampling	11.3
Pipe and lines	Continuous line sampling.	11.4
Retail outlet and wholesale purchaser-consumer facility storage tanks.	Nozzle sampling ...	11.5

11.2 Bottle or beaker sampling. The bottle or beaker sampling procedure is applicable for sampling liquids of 16 pounds (1.12 kgf/cm^2) RVP or less in tank cars, tank trucks, shore tanks, ship tanks, and barge tanks.

11.2.1 Apparatus. A suitable sampling bottle or beaker as shown in figure 2 of appendix D is required.

11.2.2 Procedure.

11.2.2.1 All-levels sample. Lower the weighted, stoppered bottle or beaker as near as possible to the draw-off level, pull out the stopper with a sharp jerk of the cord or chain and raise the bottle at a uniform rate so that it is about ¾ full as it emerges from the liquid.

11.2.2.2 Running sample. Lower the unstoppered bottles or beaker as near as possible to the level of the bottom of the outlet connection or swing line and then raise the bottle or beaker to the top of the gasoline at a uniform rate of speed such that it is about ¾ full when withdrawn from the diesel fuel.

11.2.2.3 Upper, middle, and lower samples. Lower the weighted, stoppered bottle to the proper depths (Figure 1 of appendix D) as follows:

Upper sample ..	middle of upper third of the tank contents
Middle sample	middle of the tank contents
Lower sample ..	level of the fixed tank outlet or the swing-line outlet

At the selected level pull out the stopper with a sharp jerk of the cord or chain and allow the bottle or beaker to fill completely, as evidenced by the cessation of air bubbles. When full, raise the bottle or beaker, pour off a small amount, and stopper immediately.

11.2.2.4 Top sample. Obtain this sample (Figure 1 of appendix D) in the same manner as specified in 11.2.2.3 but at six inches (150 mm) below the top surface of the tank contents.

11.2.2.5 Handling. Stopper and label bottle samples immediately after taking them, and deliver to the laboratory in the original sampling bottles.

11.3 Tap sampling. The tap sampling procedure is applicable for sampling liquids of twenty-six pounds (1.83 kgf/cm^2) RVP or less in tanks which are equipped with suitable sampling taps or lines. The assembly for tap sampling is shown in figure 3 of appendix D.

11.3.1 Apparatus

11.3.1.1 Tank taps. The tank should be equipped with at least three sampling taps placed equidistant throughout the tank height and extending at least three feet (0.9 meter) inside the tank shell. A standard ¼ inch pipe with suitable valve is satisfactory.

11.3.1.2 Tube. A delivery tube that will not contaminate the product being sampled and long enough to reach to the bottom of the sample container is required to allow submerged filling.

11.3.1.3 Sample containers. Use clean, dry glass bottles of convenient size and strength or metal containers to receive the samples.

11.3.2 Procedure

11.3.2.1 Before a sample is drawn, flush the tap (or gage glass drain cock) and line until they are purged completely. Connect the clean delivery tube to the tap. Draw upper, middle, or lower samples directly from the respective taps after the flushing operation. Stopper and label the sample container immediately after filling, and deliver it to the laboratory.

11.4 Continuous sampling. The continuous sampling procedure is applicable for sampling liquids of 16 pounds (1.12 kgf/cm^2) RVP or less and semiliquids in pipelines, filling lines, and transfer lines. The continuous sampling may be done manually or by using automatic devices.

11.4.1 Apparatus

11.4.1.1 Sampling probe. The function of the sampling probe is to withdraw from the flow stream a portion that will be representative of the entire stream. The apparatus assembly for continuous sampling is shown in figure 4 of appendix D. Probe designs that are commonly used are as follows:

11.4.1.1.1 A tube extending to the center of the line and beveled at a 45 degree angle facing upstream (Figure 4(a) of appendix D).

11.4.1.1.2 A long-radius forged elbow or pipe bend extending to the center line of the pipe and facing upstream. The end of the probe should be reamed to give a sharp entrance edge (Figure 4(b) of appendix D).

11.4.1.1.3 A closed-end tube with a round orifice spaced near the closed end which should be positioned in such a way that the orifice is in the center of the pipeline and is facing the stream as shown in figure 4(c) of appendix D.

11.4.1.2 Probe location. Since the fluid to be sampled may not in all cases be homogeneous, the location, the position and the size of the sampling probe shoud be such as to minimize stratification or dropping out of heavier particles within the tube or the displacement of the product within the tube as a result of variation in gravity of the flowing stream. The sampling probe should be located preferably in a vertical run of pipe and as near as practicable to the point where the product passes to the receiver. The probe should always be in a horizontal position.

11.4.1.2.1 The sampling lines should be as short as practicable and should be cleared before any samples are taken.

11.4.1.2.2 Where adequate flowing velocity is not available, a suitable device for mixing the fluid flow to ensure a homogeneous mixture at all rates of flow and to eliminate stratification should be installed upstream of the sampling tap. Some effective devices for obtaining a homogeneous mixture are as follows: Reduction in pipe size; a series of baffles; orifice or perforated plate; and a combination of any of these methods.

11.4.1.2.3 The design or sizing of these devices is optional with the user, as long as the

flow past the sampling point is homogeneous and stratification is eliminated.

11.4.1.3 To control the rate at which the sample is withdrawn, the probe or probes should be fitted with valves or plug cocks.

11.4.1.4 Automatic sampling devices that meet the standards set out in 11.4.1.5 may be used in obtaining samples of diesel fuel. The quality of sample collected must be of sufficient size for analysis, and its composition should be identical with the composition of the batch flowing in the line while the sample is being taken. An automatic sampler installation necessarily includes not only the automatic sampling device that extracts the samples from the line, but also a suitable probe, connecting lines, auxiliary equipment, and a container in which the sample is collected. Automatic samplers may be classified as follows:

11.4.1.4.1 Continuous sampler, time cycle (nonproportional) type. A sampler designed and operated in such a manner that it transfers equal increments of liquid from the pipeline to the sample container at a uniform rate of one or more increments per minute is a continuous sampler.

11.4.1.4.2 Continuous sampler, flow-responsive (proportional) type. A sampler that is designed and operated in such a manner that it will automatically adjust the quantity of sample in proportion to the rate of flow is a flow-responsive (proportional) sampler. Adjustment of the quantity of sample may be made either by varying the frequency of transferring equal increments of sample to the sample container, or by varying the volume of the increments while maintaining a constant frequency of transferring the increments to the sample container. The apparatus assembly for continuous sampling is shown in figure 4 of appendix D.

11.4.1.4.3 Intermittent sampler. A sampler that is designed and operated in such a manner that it transfers equal increments of liquid from a pipeline to the sample container at a uniform rate of less than one increment per minute is an intermittent sampler.

11.4.1.5 Standards of installation. Automatic sampler installations should meet all safety requirements in the plant or area where used, and should comply with American National Standard Code for Pressure Piping, and other applicable codes (ANSI B31.1). The sampler should be so installed as to provide ample access space for inspection and maintenance.

11.4.1.5.1 Small lines connecting various elements of the installation should be so arranged that complete purging of the automatic sampler and of all lines can be accomplished effectively. All fluid remaining in the sampler and the lines from the preceding sampling cycle should be purged immediately before the start of any given sampling operation.

11.4.1.5.2 In those cases where the sampler design is such that complete purging of the sampling lines and the sampler is not possible, a small pump should be installed in order to circulate a continuous stream from the sampling tube past or through the sampler and back into the line. The automatic sampler should then withdraw the sample from the sidestream through the shortest possible connection.

11.4.1.5.3 Under certain conditions, there may be a tendency for water and heavy particles to drop out in the discharge line from the sampling device and appear in the sample container during some subsequent sampling period. To circumvent this possibility, the discharge pipe from the sampling device should be free of pockets or enlarged pipe areas, and preferably should be pitched downward to the sample container.

11.4.1.5 To ensure clean, free-flowing lines, piping should be designed for periodic cleaning.

11.4.1.6 Field calibration. Composite samples obtained from the automatic sampler installation should be verified for quantity performance in a manner that meets with the approval of all parties concerned (including EPA), at least once a month and more often if conditions warrant. In the case of time-cycle samplers, deviations in quantity of the sample taken should not exceed ± five percent for any given setting. In the case of flow-responsive samplers, the deviation in quantity of sample taken per 1,000 barrels of flowing stream should not exceed ± 5 percent. For the purpose of field-calibrating an installation, the composite sample obtained from the automatic sampler under test should be verified for quality by comparing on the basis of physical and chemical properties, with either a properly secured continuous nonautomatic sample or tank sample. The tank sample should be taken under the following conditions:

11.4.1.6.1 The batch pumped during the test interval should be diverted into a clean tank and a sample taken within one hour after cessation of pumping.

11.4.1.6.2 If the sampling of the delivery tank is to be delayed beyond one hour, then the tank selected must be equipped with an adequate mixing means. For valid comparison, the sampling of the delivery tank must be completed within eight hours after cessation of pumping, even though the tank is equipped with a motor-driven mixer.

11.4.1.6.3 When making a normal full-tank delivery from a tank, a properly secured sample may be used to check the results of the sampler if the parties (including EPA) mutually agree to this procedure.

11.4.1.7 Receiver. The receiver must be a clean, dry container of convenient size to receive the sample. All connections from the sample probe to the sample container must be free of leaks. Two types of container may

be used, depending upon service requirements.

11.4.1.7.1 Atmospheric container. The atmospheric container shall be constructed in such a way that it retards evaporation loss and protects the sample from extraneous material such as rain, snow, dust, and trash. The construction should allow cleaning, interior inspection, and complete mixing of the sample prior to removal. The container should be provided with a suitable vent.

11.4.1.7.2 Closed container. The closed container shall be constructed in such a manner that it prevents evaporation loss. The construction must allow cleaning, interior inspection and complete mixing of the sample prior to removal. The container should be equipped with a pressure-relief valve.

11.4.2 Procedure.

11.4.2.1 Nonautomatic sample. Adjust the valve or plug cock from the sampling probe so that a steady stream is drawn from the probe. Whenever possible, the rate of sample withdrawal should be such that the velocity of liquid flowing through the probe is approximately equal to the average linear velocity of the stream flowing through the pipeline. Measure and record the rate of sample withdrawal as gallons per hour. Divert the sample stream to the sampling container continuously or intermittently to provide a quantity of sample that will be of sufficient size for analysis.

11.4.2.2 Automatic sampling. Purge the sampler and the sampling lines immediately before the start of a sampling operation. If the sample design is such that complete purging is not possible, circulate a continuous stream from the probe past or through the sampler and back into the line. Withdraw the sample from the side stream through the automatic sampler using the shortest possible connections. Adjust the sampler to deliver not less than one and not more than 40 gallons (151 liters) of sample during the desired sampling period. For time-cycle samplers, record the rate at which sample increments were taken per minute. For flow-responsive samplers, record the proportion of sample to total stream. Label the samples and deliver them to the laboratory in the containers in which they were collected.

11.5 Nozzle sampling. The nozzle sampling procedure is applicable for sampling diesel fuel from a retail outlet or wholesale purchaser-consumer facility storage tank.

11.5.1 Apparatus. Sample containers conforming with 4.1 should be used. A spacer, if appropriate (Figure 6 of appendix D), and a nozzle extension device similar to that shown in figures 7 or 7a of appendix D shall be used when nozzle sampling. The nozzle extension device does not need to be identical to that shown in figure 7 or 7a of appendix D but it should be a device that will bottom fill the container.

11.5.2 Procedure. Immediately after diesel fuel has been delivered from the pump and the pump has been reset, deliver a small amount of product into the sample container. Rinse sample container and dump product into waste container. Insert nozzle extension (Figure 7 or 7a of appendix D) into sample container and insert pump nozzle into extension with slot over air bleed hole. Fill slowly through nozzle extension to 70–80 percent full (Figure 8 of appendix D). Remove nozzle extension. Cap sample container at once. Check for leaks.

12. Special Precautions and Instructions.

12.1 Precautions. Official samples should be taken by, or under the immediate supervision of, a person of judgment, skill, and sampling experience. Never prepare composite samples for this test. Make certain that containers which are to be shipped by common carrier conform to applicable Interstate Commerce Commission, State, and local regulations. When flushing or purging lines or containers, observe the pertinent regulations and precautions against fire, explosion, and other hazards.

12.2 Sample containers. Use containers of not less than one quart (0.9 liter) nor more than two gallons (7.6 liters) capacity, of sufficient strength to withstand the pressure to which they may be subjected. Open-type containers have a single opening which permits sampling by immersion. Closed-type containers have two openings, one in each end (or the equivalent thereof), fitted with valves suitable for sampling by water displacement or by purging.

12.3 Transfer connections. The transfer connection for the open-type container consists of an air tube and a liquid delivery tube assembled in a cap or stopper. The air tube extends to the bottom of the container. One end of the liquid delivery tube is long enough to reach the bottom of the diesel fuel chamber while the sample is being transferred to the chamber. The transfer connection for the closed-type container consists of a single tube with a connection suitable for attaching it to one of the openings of the sample container. The tube is long enough to reach the bottom of the diesel chamber while the sample is being transferred.

12.4 Sampling open tanks. Use clean containers of the open type when sampling open tanks and tank cars. An all-level sample obtained by the bottle procedure described in 11.2 is recommended. Before taking the sample, flush the container by immersing it in the product to be sampled. Then obtain the sample immediately. Pour off enough so that the container will be 70–80 percent full and close it promptly. Label the container and deliver it to the laboratory.

12.5 Sampling closed tanks. Containers of either the open or closed type may be used to obtain samples from closed or pressure

tanks. If the closed type is used, obtain the sample using the water displacement procedure described in 12.8 or the purging procedure described in 12.9. The water displacement procedure is preferable because the flow of product involved in the purging procedure may be hazardous.

12.6 Water displacement procedure. Completely fill the closed-type container with water and close the valves. While permitting a small amount of product to flow through the fittings, connect the top or inlet valve of the container to the tank sampling tap or valve. Then open all valves on the inlet side of the container. Open the bottom or outlet valve slightly to allow the water to be displaced slowly by the sample entering the container. Regulate the flow so that there is no appreciable change in pressure within the container. Close the outlet valve as soon as diesel fuel discharges from the outlet; then in succession close the inlet valve and the sampling valve on the tank. Disconnect the container and withdraw enough of the contents so that it will be 70–80 percent full. If the vapor pressure of the product is not high enough to force liquid from the container, open both the upper and lower valves slightly to remove the excess. Promptly seal and label the container, and deliver it to the laboratory.

12.7 Purging procedure. Connect the inlet valve of the closed-type container to the tank sampling tap or valve. Throttle the outlet valve of the container so that the pressure in it will be approximately equal to that in the container being sampled. Allow a volume of product equal to at least twice that of the container to flow through the sampling system. Then close all valves, the outlet valve first, the inlet valve of the container second, and the tank sampling valve last, and disconnect the container immediately. Withdraw enough of the contents so that the sample container will be 70–80 percent full. If the vapor pressure of the product is not high enough to force liquid from the container, open both the upper and lower valves slightly to remove the excess. Promptly seal and label the container, and deliver it to the laboratory.

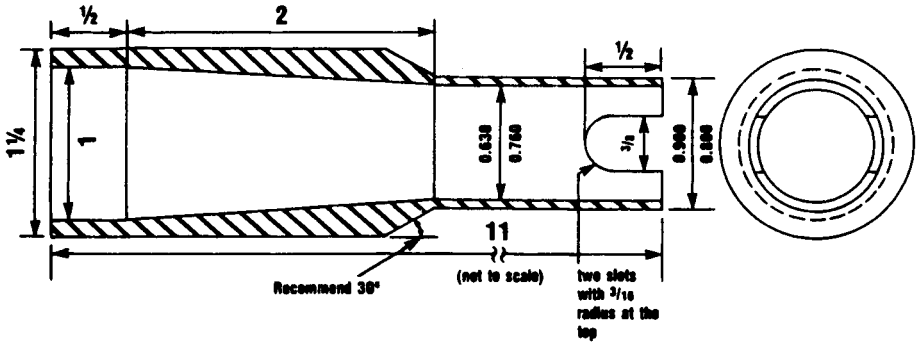

All Dimensions in inches (full scale except as noted)
All decimal dimensions represent minimum and maximum
Tolerance for all other dimensions is ± 1/32"
Made of non-ferrous material, uneffected by gasoline

Figure 7a. Nozzle Extension for Nozzle Sampling

(Compatible with narrow neck sample containers)

[55 FR 34140, Aug. 21, 1990]